US Army Corps of Engineers®
Walla Walla District

U.S. ARMY CORPS OF ENGINEERS – WALLA WALLA DISTRICT
201 North 3rd Avenue, Walla Walla, WA 99362
509-527-7020
www.nww.usace.army.mil

Flood-Fight Handbook

Preparing For a Flood

October 2015

Original “Flood Fight Handbook” produced by St. Paul District in February 2009. Adapted for use in the inland Pacific Northwest (Snake River Basin) by Walla Walla District.

Table of Contents

1 Preparedness starts with you. 1

2 Protecting Lives, and Reduce Flood and Water Damage in Homes and Businesses 1
2.1 Community Preparedness 1
2.2 Home & Business Preparedness 3
2.3 Family Preparedness 5

3 Information Gathering 6
3.1 Types of flooding 8
3.2 Weather information 9
3.3 Monitoring river conditions and forecasts 9

4 Sandbagging for Flood Protection 9
4.1 Sandbag Size and Fill Materials 10
4.2 Site Selection and Preparation 11
4.3 Stacking Sandbags to Form a Dike 12
4.4 Sealing the Dike with Polyethylene Plastic Sheeting 13
4.5 Number of Sandbags Needed 17
4.6 Commercial equipment available for sandbagging operations 17

5 Earth Fill Levees 17
5.1 Foundation Preparation 17
5.2 Levee Fill 17
5.3 Levee Design Section 18
5.4 Scour Protection for Emergency Levees 19
5.5 Flashboard and Box Levee Barriers 22

6 Interior Drainage Treatment 22
6.1 General 22
6.2 Preliminary Work 23
6.3 Determination of Pumping Requirements 23
6.4 Pumps: Types, Sizes and Capacities 28
6.5 Metal Culverts 31
6.6 Preventing Backflow in Sewer Lines 31

7 Flood Fight Problems 31
7.1 General 31
7.2 Monitoring Flood Works 31
7.3 Overtopping 32
7.4 Seepage 32
7.5 Sand Boils 33
7.6 Erosion 34
7.7 Storm Sewers and Sanitary Sewers 34
7.8 Closures 35
7.9 Causes of Levee Failure 35

8 Putting it all together 39

9 Recovering from a flood event 40

10 List of Resources and Hyperlinks 41

11 List of Plates Showing Emergency Flood Control Activities 42

12 Handout: "Flood Fighting: How to use sandbags" 43

List of Figures

1	Community flood preparedness (Sandbag filling operation)
2	Examples of River Staff Gages
3	Correct and incorrect sandbag preparation.
4	Proportions of Sandbag Dike showing Bonding Trench at base.
5	Overlap sandbags lengthwise and parallel to river flow.
6	Correct and incorrect placement of staggered sandbag layers.
7	Preferred method of tucking under and anchoring poly with two rows of sandbags.
8	Poly edge placed over dirt and anchored with a row of sandbags.
9	Poly anchored within a trench – placed under dry conditions.
10	Poly placement from downstream to upstream with overlap shown.
11	Regions Map for determining B and K values
12	Appropriate flooding descriptions that should used to correspond to the levee responses to rising water.
13	Possible results when levee is overtopped.
14	Levee failure without overtopping.
15	Levee performs as designed.

List of Tables

3.1	Information Types and Sources
4.1a	Estimated Number of Sandbags Per Linear Foot of Dike
4.1b	Number of Sandbags Required For Length of Dike
6.1	Values of B for Computation of Pumping when contributing drainage area is greater than 1.0 square miles (640 acres)
6.2	Values of K for Computation of Pumping when contributing drainage area is less than 1.0 square miles (640 acres)
6.3	Values of M for Adjustment to Pumping Rate (M values in the center box)
6.4	Matching Sewer Pipe Size to Pump Size
6.5	Typical Pump Discharge Capacities for Ag. Pumps used in ponded areas.
6.6	Flow Capacity of Clay Sewer Pipe on two different slopes (S)
6.7	Crisafulli Pumps -- Model CP 2-inch to 24-inch Tractor driven
6.8	Flygt Centrifugal Pumps (Submersible)

1 Preparedness starts with you.

All disasters begin and end at the local level. Multiple agencies may step in to assist you, your neighbors, and your community. If you, your family, and your community, are prepared for a flood, the response and recovery will run with fewer issues and stress. This handbook offers advice on what you can do in regards to flooding.

2 Protecting Lives, and Reduce Flood and Water Damage in Homes and Businesses[1,2]

If flooding is anticipated, many things can be done to reduce the threat to lives, and damage to homes and property before the snow melts or before a heavy rainstorm. If flooding is unexpected, many of those same things can help to protect lives, homes, and property. This checklist can help you take the steps needed to reduce the severity of damage from flooding to your family, home, or business.

2.1 Community Preparedness

☐ **Review county or city flood response plans.**

Community preparedness can provide a coordinated response to a flood event. County and city governments maintain disaster response plans for this reason. If flooding is a significant hazard in your area, checking with the local emergency manager is a good first step. City and county policies and procedures drive the first response to any disaster, so it's important to understand those policies.

☐ **Know who's involved, and their roles and responsibilities.**

Flooding brings many different agencies and organizations to the table. Each one has separate authorities and capabilities that complement, overlap, or conflict with each other. Understanding their roles and responsibilities ahead of a flood event, and how they can (or cannot) help you, will save time and effort when the flood waters are rising.

☐ **Gather Information.**

Flood events can be created by different conditions. Snow-melt floods can be anticipated while flash flooding from a thunderstorm can't be. Yet, both can be equally destructive. Understanding the differences allows you to prioritize what should be normal preparedness steps. When time is short, and flooding is imminent, you will have fewer things to worry about. Agencies involved in flooding often may have relevant information on the flooding hazard in your

[1] Parts of this section is modified from the North Dakota State University, Extension Service, Flood Disaster Education website: link provided in Section 10.
[2] More information may be found in "How To Prepare For A Flood" from FEMA, link in Section 10.

area. The hazard-mitigation plan in your local or state emergency management office is a good place to start (see Section 2).

☐ **Identify your resources.**

What would you need during a flood? Sandbags? Communications? Information? Traffic control? Evacuation assistance? Pumps? Volunteer labor? Something else? Do local flood plans list those and how you can get them? What do you need during a flood? Make a list to support your plan.

☐ **Coordinate and plan ahead of flood season.**

Responding to a flood is difficult because there tends to be little to no advance warning (see Section 2). Many details can be developed prior to a flood event (or flood season), such as those noted above. Sitting down with the relevant agencies or people ahead of flooding pays off with a quick response when time is short.

☐ **Train and exercise.**

When possible, train with your partners and exercise the plan. A simple tabletop exercise will go a long way to clear up conflicts and mistakes.

Figure 1: An example of community flood preparedness (Sandbag filling operation)

2.2 Home & Business Pre-flood Preparedness Measures

These are measures that you can perform ahead of a flood, or before flood season.

☐ **Check sump pump.**

Annually and before flood season, clean the sump pump and pit, and test the pump by pouring water into the pit. Consider having a spare submersible portable sump pump. Make sure the discharge hose delivers the water several feet away from the house to a well-drained area that slopes away from the house. If the hose outlet is too close to the house foundation or on flat ground, the water may simply recycle down through the house's drain tile at the base of the foundation, or along the basement walls to the sump. Don't run the sump pump water into a rural septic system because the water may saturate and damage the drain field. In cities, don't run the sump pump water into the sanitary system; it may overload the system and cause sewage backup, and such actions may also be illegal.

☐ **Move valuables to higher locations.**

When you are aware that flooding may enter your property, take items such as irreplaceable family photo albums, high school yearbooks, personal videotapes, tax records, insurance policies, computers and backup discs, and household inventories off the bottom shelves in the lower level of your home, and move to a second floor if available.

☐ **Plug basement floor drains, if possible.**

If flooding is imminent, and if your floor drain has a removable grid cover, a flexible rubber ball about 1-¼ times the inside diameter of the pipe can be wedged into the drain to create a tight seal. The pressure might be quite high so brace the ball securely with a length of 2 by 4 lumber against the ceiling. Hold a board or piece of plywood on the ceiling and slide the 2 by 4 against the bottom of the board to avoid damage to plaster ceilings. For a suspended tile ceiling, remove ceiling tiles to get access to the ceiling joists. Span a 2 by 4 across the two joists and wedge the vertical 2 by 4 between it and the ball in the drain. Some hardware stores sell a plug that has a rubber center that expands to fill the pipe when the top and bottom metal plates are squeezed.

☐ **Cover basement floor drains that have permanent grid covers.**

If your floor drain cover cannot be removed, place a partially inflated inner tube around the drain, and top it with a square or two of plywood (not particle board). The plywood must be larger across than the inner tube to cover it. Brace this in place against the ceiling with 2 x 4s, as described above for the rubber ball in the drain. Be prepared for some seepage.

☐ **Plug bathroom and utility drains to reduce flooding.**
Again, if flooding is imminent, unbolt toilets from the floor and plug the outlet pipes using the same procedure as for floor drains. Shower drains can be plugged this way too. Most washing machines and basement sinks have their drain connections about 3 feet above the floor so they may not overflow if the water doesn't get that high. If necessary, these drains can be disconnected and capped or plugged with braced rubber balls.

☐ **Move snow away from the house's foundation and slope the ground.**
If the ground is sloped at least one inch per foot near the house, moving snow just 3 to 5 feet from the house will reduce problems. This should be performed routinely during the winter, or at least a few weeks ahead of spring run-off.

☐ **Contour ground surface to keep water out of window wells.**
Because windows can't withstand much pressure, landscape your property to build dams and contour the ground so water will naturally drain away from the house.

☐ **Ensure roof gutters and downspouts are in place and functional**
As the snow melts, downspouts and extensions can carry the water away from the house. Using salt or a chemical can assist in melting the ice within the gutters, but may damage the lawn.

☐ **Prepare appliances for flooding.**
If flooding is imminent, shut off appliances at the fuse box or breaker panel and unplug them if possible. Put freezers, washer, dryers and other appliances up on wood or cement blocks to keep the motors above the water level. If high water is imminent and large appliances can't be moved, wrap them in plastic, and tie it in place with cord or rope. The water will still enter the appliance, but the plastic will keep much of the silt out, making cleanup easier.

☐ **Shut off electricity to areas of the home that might flood.**
Even if floodwaters have not reached electrical outlets, the risk of electrical shock to someone entering a flooded basement is high unless all electrical breakers have been switched off, or electrical fuses unscrewed, disconnecting the electrical service to all motors and electrical appliances if flooding is imminent. Do NOT stand in water and turn off electrical service. If the floor is damp but not flooded stand on a dry piece of wood or plastic crate, in addition to using a plastic or rubber pole or a piece of dry wood to flip the switches. Do NOT stand on a metal ladder or step stool! If floodwaters have already entered the home to an unsafe level, call the power supplier and have the electrical supply to the house disconnected. Taking these precautions will reduce the chances of electrical shock

☐ **Move hazardous materials to higher locations.**
If flooding is imminent, paint, oil, cleaning supplies and other dangerous materials should be moved to reduce the chance of leaks into the floodwaters and the environment.

☐ **Plan an escape route and destination.**
If certain roads or streets are known to flood easily, plan ahead of a flood, and know an alternate route to evacuate the area. Where would you go if your home flooded? Local shelters or the home of a family member or friend are the most common locations

☐ **Plan in advance for pets (and livestock) and assemble supplies for them.**
Make plans for your pets in the event of a flood. If you evacuate your home, do not leave your pets behind. Although pets aren't allowed in most shelters due to health regulations, most pets cannot survive on their own or may become lost if left behind. Many communities offer pet sheltering for evacuees.

Have a travel carrier or crate, bedding, and leashes and collars/harnesses ready prior to evacuation. Take pet food and other supplies with you in case they're not available later. Consider packing a "pet survival" kit in advance, to be ready to go if disaster hits. During evacuation planning, visit FEMA's pet evacuation webpage listed in Section 6 for more details on preparing your pet for a disaster and evacuation. If you have livestock, evacuation is your best solution, so be sure your animals can be identified. Review FEMA's livestock evacuations webpage listed in Section 6.

☐ **Assemble supplies in case the electricity goes off.**
Gather water, food that requires no refrigeration or cooking, a non-electric can opener, a battery-powered radio, flashlights, and extra batteries. See www.ready.gov

☐ **Assemble supplies for a possible evacuation.**
Gather water, nonperishable food, paper plates/cups and plastic utensils, extra clothing and shoes, blankets or sleeping bags, a first aid kit and prescription medications, cash and credit cards, important phone numbers, and any special items for babies and the elderly. See www.ready.gov

2.3 Family Preparedness (in advance of a flood)

☐ **Discuss what to do in case of a flood.**
As in the case of wildfires, flood evacuation routes must be identified, carefully planned, and practiced. Should the primary route be flooded, closed, or inaccessible, then alternative routes must also be considered. Climbing into the attic or refusing to evacuate is NOT an option.

☐ **Identify a central point of contact – an out-of-town family member or friend.**

If family members get separated during an evacuation, each should get in touch with the emergency contact. Make sure everyone has the contact's phone numbers, and that small children have contact information on a necklace card.

☐ **Discuss safe emergency procedures.**

Adults need to know where electric fuse boxes, water service mains and natural gas mains are located and how to turn them off if necessary.

☐ **Discuss the situation with children honestly and openly.**

Hiding the emergency situation from children will cause unnecessary stress. Answer their questions and be open, honest and caring. Emphasize the need to follow directions and stay with the family, a known adult or the school officials.

3 Information Gathering

Alerts and forecasts may, in most cases, provide up to 3 days warning of flooding conditions. Some events occur with no warning at all. Mobilizing for a flood will take all the time available. Generally, flooding can be *anticipated* if the conditions leading to an event are generally know. Gathering information and analyzing the flood threat is an important step in being ready for a flood event. If possible, form a multi-agency team to gather and analyze the information.

Make a checklist of the materials needed and potential sources for them. This includes, but is not limited to, the items in Table 3.1. The amount of needed information depends on the area under consideration, the population, the potential flooding hazard (including amount of water and duration), and the level of detail desired in the flood plan.

Draw the area of concern on the map, and then identify the flood event that is most likely to impact that area the most. Develop a brief statement that clearly describes the following bullets:

- Who in the area is potentially impacted? Urban, rural, agricultural, facilities, services, industrial areas, infrastructure, etc.
- What could cause the flooding? List the types of flooding that are of concern (see section 3.1): rain storms, snow melt, dam or levee failure, some combination of the above, and so on.
- Where could the flooding occur? Draw the potential flooded area(s) on a map.
- When might the flooding occur? Is there a time of the year when the flood risk is higher?
- Why should a flood occur? Identify the conditions that could trigger a flood.
- How could the flood event impact the area of concern? Look at damages, economic losses, public safety, and so on.

Table 3.1: Information Types and Sources

Type	Examples	Sources
Maps	• Topographic maps: Shows terrain in potential flood zones. • Road maps: used to indicate road systems affected by flooding, access routes to water control structures, and to plot evacuation and supply routes. • Levees, irrigation, and other water control systems: provide the location and type of access roads, elevation markers, sewer outfall locations, conduit/utility crossings, railroad gap placements, and information on flood gates and barriers. • Sewer and utilities: List gas, water, and petroleum pipeline crossings. • Zoning: define the land use around river systems. • FEMA Flood Insurance Rate Maps. • Other: Historic flood plots provide information on previous high water events.	• GIS mapping • Planning Department • Road or highway department • Commercial sources
Reports and Analysis Data	• Historic flood information • After-action reports • Flood Studies • Hazard analysis information	• Planning Department • City or County EM office • US Army Corps of Engineers • Local Emergency Planning Council
Existing Plans	• Local/Agency Flood Plans • Regional and State Flood plans • Federal agency Flood plans	• City or county EM office • State EM Agency • Relevant Federal agencies
Planning Guides and References	• Comprehensive Planning Guide (CPG) 101 • Flood handbooks • Individual Flood Preparedness	• FEMA • US Army Corps of Engineers • American Red Cross
Forecast and warning systems	• National Weather Service (see section 3.2) • NOAA (see section 3.3) • Emergency Action Plans for dams and levees.	• NOAA Advanced Hydrologic Prediction Service • Near-by Weather Forecast Office(s) • City or County EM office

This will be the hazard impact statement, and should guide further response planning.

3.1 Types of flooding

Flash flood: Caused by heavy or excessive rainfall in a short period of time, generally less than six hours. Flash floods are usually characterized by raging torrents after heavy rains that rip through river beds, urban streets, or mountain canyons sweeping everything before them. They can occur within minutes or a few hours of excessive rainfall. They can also occur even if no rain has fallen, such as after a sudden release of water by a debris or ice jam.

River flood: Occurs when water levels rise over the top of river banks due to excessive rain from weather systems making landfall, persistent thunderstorms over the same area for extended periods of time, combined rainfall and snowmelt, or jams from debris and ice.

Infrastructure failure flood: A dam, levee, water pipe, or other structure fails for any number of reasons, with or without advance notice. Some structures have an emergency action plan that includes warning systems to alert adjacent areas of failure or imminent failure. These may or may not be associated with a river.

Coastal flood: Inundation of land areas along the coast, is caused by higher than average high tide and worsened by heavy rainfall and onshore winds (i.e., wind blowing landward from the ocean).

Storm surge: An abnormal rise in water level in coastal areas, over and above the regular astronomical tide, caused by forces generated from a severe storm's wind, waves, and low atmospheric pressure. Storm surge is extremely dangerous, because it is capable of flooding large coastal areas. Extreme flooding can occur in coastal areas particularly when storm surge coincides with normal high tide, resulting in storm tides reaching up to 20 feet or more in some cases.

Snowpack: Snowpack forms from layers of snow that accumulate in geographic regions and high altitudes where the climate includes cold weather for extended periods during the year. Snowpacks are an important water resource that feed streams and rivers as they melt. Therefore, snowpacks are a potential source of flooding, in case of rapid or prolonged melting, and are important to understand.

Reservoir operations: A reservoir is an enlarged natural or artificial lake, storage pond, or impoundment created using a dam or lock to store water. These are very common throughout the Pacific Northwest, and have been known to both mitigate and aggravate flooding conditions. Each reservoir operates in a unique fashion, based on local conditions, existing water usage agreements, and other influences. Work with the reservoir owner(s) to allow for open communications during flooding events.

3.2 Weather information

Weather often creates flood events. Staying aware of current and forecasted weather allows for flood events to be anticipated, and responded to in a timely manner. The National Weather Service provides forecasts, watches, warnings, and advisories regarding climate, weather, and hydrologic conditions. Strategically placed Weather Forecast Offices provide this service across the nation, and the information is available through the INTERNET, radio, TV, and other sources. See Section 10 for links.

3.3 Monitoring river conditions and forecasts

Knowing what a river is doing now, and may do in the future, is critical in any flood fight. Anticipating a flood provides the time to mobilize and prepare. There two general means of monitoring rivers.

Advanced Hydrologic Prediction Service (AHPS): This is a web-based suite of forecast products, provided by the National Weather Service. They display the magnitude and uncertainty of occurrence of floods, from hours to days and months, in advance. These graphical products are useful information and planning tools for many economic and emergency managers. These products enable government agencies, private institutions, and individuals to make more informed decisions on actions to mitigate the dangers posed by floods. Contact the appropriate Weather Forecast Office for more information on AHPS, and forecasts at specific locations. See Section 10 for links.

Direct monitoring: River watching is the original river forecasting technique. This means watching the same place on the river over time, and knowing the meaning of any changes in water elevation. The best way of doing this is through the use of staff gages (see Figure 2), installed at locations that are far enough upstream to give some warning to impacted areas, but can be safely read from dry land. The gage readings should be recorded at a central location so that the river trends can be tracked.

4 Sandbagging for Flood Protection

Information in the following section is modified from several sources, in particular: 1) the North Dakota State University, Extension Service, Coping With Floods website, 2) the Dane County, Wisconsin, Department of Emergency Management website, and 3) employees of the St. Paul District U.S. Army Corps of Engineer (USACE-MVP), and Walla Walla District U.S. Army Corps of Engineers (USACE-NWW). Links are provided in Section 10.

A properly built sandbag dike can prevent or reduce flood damage. The sandbag size, the fill material used, and method of placement all influence the effectiveness of the sandbag dike. This is summarized in a handout at the end of this manual.

Figure 2: Examples of River Staff Gages

4.1 Sandbag Size and Fill Materials

Bags must be filled and placed properly to give the best protection. Any available material can be used to fill sandbags, but sand is easiest to handle. Silt and clay will form a good dike but are more difficult to work with. Different size bags are available, but bags are easier to handle if weight is limited to between 35 and 40 pounds. This weight limit is particularly important when teenagers or older persons will be handling the bags and assisting with emergency operations and dike construction.

Typically sandbags are filled approximately half full and <u>do not</u> need to be tied, although they may be tied loosely near the top. It is desired that the sandbags lay flat when placed. Overfilled bags reduce the dike's effectiveness by leaving gaps between the bags, allowing water to seep through. Figure 3 illustrates the correct and incorrect ways to prepare sandbags. Tying is not required for a correctly filled sandbag.

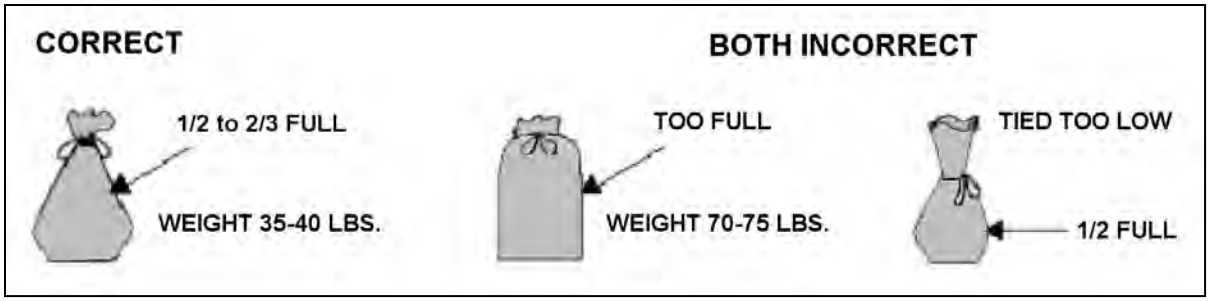

Figure 3 – Correct and incorrect sandbag preparation.

Ordinarily, filling sandbags is a two or three-person operation. One member of the team should place the bottom of the empty bag on the ground slightly in front of wide-spread feet with arms extended. This person may also want to kneel or sit to avoid back strain from bending. The throat of the bag is folded outward about 1-1/2 inches to form a collar and held in that position to allow a second team member to empty a shovelful of material into the open end, until the bag is ½ to 2/3 full. The third team member stacks and stockpiles the filled sandbags. Gloves should be used to avoid injury, and safety goggles are desirable during dry and windy days. For larger operations, bag-holding racks and funnels on the back of dump trucks, and other power loading equipment can be used to expedite the filling operation.

The following pages describe and illustrate a number of suggested techniques for using sandbags and other materials to build temporary flood protection dikes. Additional details are provided in Section 3.4.1 and shown on Plates 1 through 3 at the back of this manual

Contact your county emergency office for information on where to obtain sandbags.

4.2 Site Selection and Preparation

When selecting the location for a dike, consider the ground elevation, ground condition, obstructions, and alignment. For stability, the dike should be kept as short and low as possible. Avoid any obstructions that would weaken the dike, and do not build the dike against a building wall unless the wall has been designed to retain floodwaters. If possible, plan to leave at least 8 feet between the landward toe / base of the dike and any building or obstructions to allow for future dike raises, dike monitoring, construction equipment and vehicles, and to prevent damage to building walls and foundations.

Remove all ice and snow from a strip of land at least as wide as the base of the dike. If the dike will be more than 2 - 3 feet high, remove a strip of sod to create a bonding trench along the center line of the alignment to better anchor the dike in place, as shown in Figure 4.

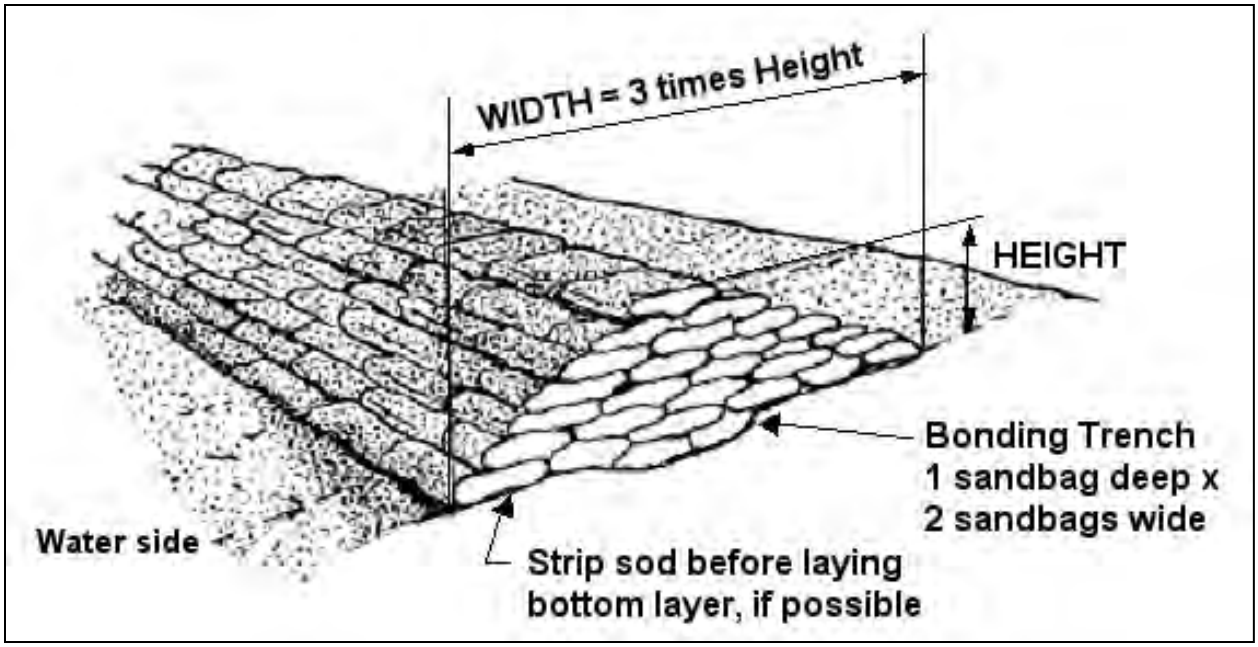

Figure 4 – Proportions of sandbag dike showing bonding trench at base.

4.3 Stacking Sandbags to Form a Dike

Overlap the sandbags as shown in Figure 5, placing the first layer of bags lengthwise along the dike and lapping the bags so the filled portion of one bag lies on the unfilled portion of the previous bag.

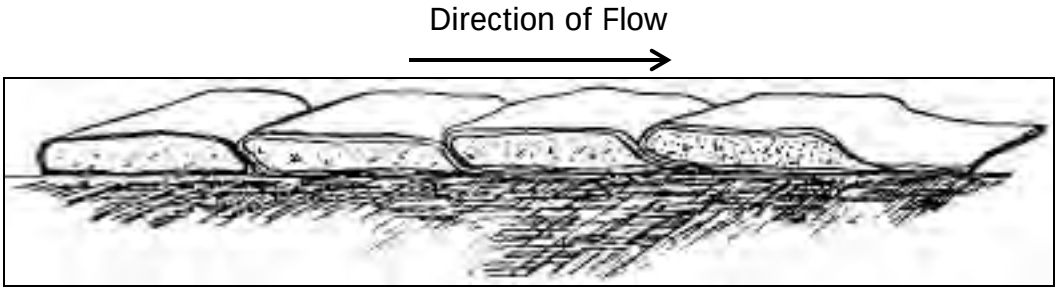

Figure 5 – Overlap sandbags lengthwise and parallel to river flow.

The bags should be placed lengthwise and overlapped parallel to the direction of the river flow. The bonding trench shown on Figure 4 should be filled with a layer that is two sandbags wide by one sandbag high; the first full layer is then placed over this bonding trench. The base of the dike should be three times as wide as the dike is high.

The second layer of bags should be staggered perpendicular to the first layer and placed over the seams of the previous layer, with additional layers laid in alternating directions to the top of the dike, as shown in the “Correct” example in Figure 6. By alternating placement directions, the gaps and seams along the edges and corners in each layer below will be covered and filled in by a sandbag in the next overlying layer. *Plate 1* at the back of this manual illustrates additional details of sandbag placement.

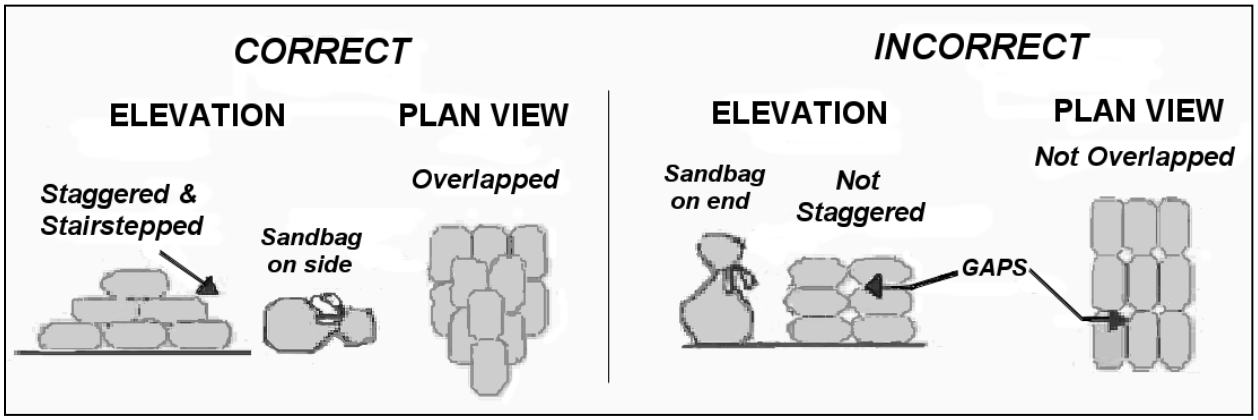

Figure 6 – Correct and incorrect placement of staggered sandbag layers.

4.4 Sealing the Dike with Polyethylene Plastic Sheeting

The finished dike can be sealed with a sheet of polyethylene plastic (poly) to improve water tightness. The poly sheeting should be about 6 mils thick, and is generally available in 20-foot-wide by 100-foot-long rolls from construction supply firms, lumberyards, and farm stores. Section 3.4.1 can be consulted for additional details. The poly must always be anchored at the bottom edge and weighted along the top and slope to be effective.

Three methods are recommended to anchor the poly on the riverward face of a sandbag dike. The most successful is shown in Figure 7 and described as follows: (1) Poly is placed flat on the ground surface extending away from the bottom row of sandbags, and one or more rows of sandbags are placed over the flap. The poly is then unrolled over the anchoring row of sandbags, anchored again, and then up the slope and over the top of the sandbag dike, far enough to allow for anchoring with additional sandbags.

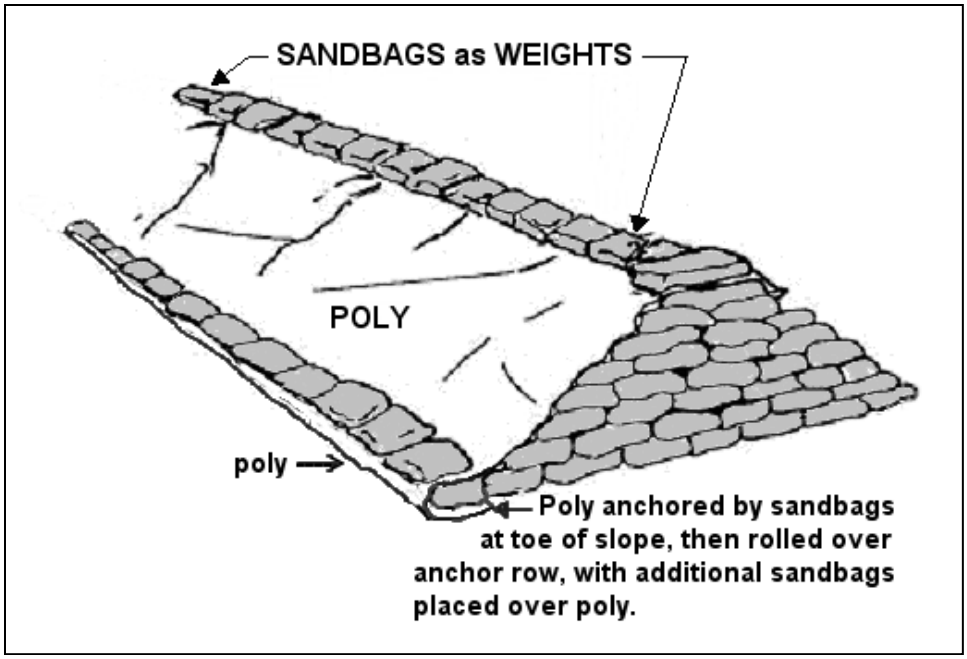

Figure 7 – Preferred method of tucking under and anchoring poly with two rows of sandbags.

Other methods available include: (2) At the base of the dike along the water side, spread a layer of dirt or sand one inch deep and about one foot wide along the bottom of the dike, to create a uniform surface to anchor the poly. Lay the poly sheeting so the bottom edge extends one to two feet beyond the bottom edge of the sandbags over the loose dirt. Place sandbags over the edge of the poly to anchor (Figure 8).

A third method to anchor the poly is: (3) Excavate a 6-inch or deeper trench along the toe of the levee, place poly in the trench, and backfill the trench, compacting the backfill material or placing a row of sandbags over the trench to prevent loss of the backfill material (Figure 9). This method will be unsuitable if water levels have reached the sandbags at the toe of the dike. In all cases the poly is unrolled up the slope and over the top, and anchored along the top with additional sandbags.

Poly should be placed from downstream to upstream along the slopes and the next sheet upstream overlapped by at least 3 feet, as shown on Figure 10. Overlapping in this direction prevents the current from flowing under the overlap and tearing the poly loose. Lay the poly sheeting down very loosely, as the pressure of the water will make the poly conform easily to the sandbag surface if the poly is loose. If the poly is stretched too tightly the force of the water against the poly and sandbags could puncture the poly. Once the poly is placed, additional sandbags, boards, and/or loose dirt placed over the poly are needed to anchor the poly in place and prevent the wind or river current from disturbing it. These anchors are not shown on the illustration. Avoid puncturing the poly with sharp objects or by walking on it.

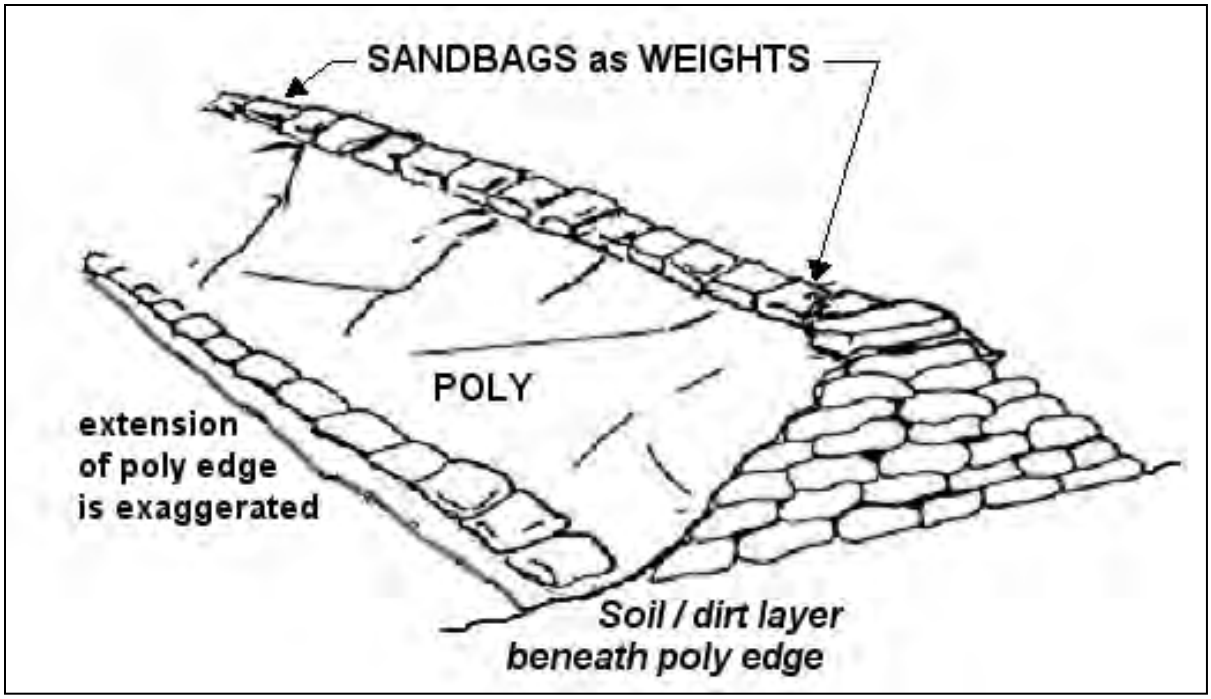

Figure 8 – Poly edge placed over dirt and anchored with a row of sandbags.

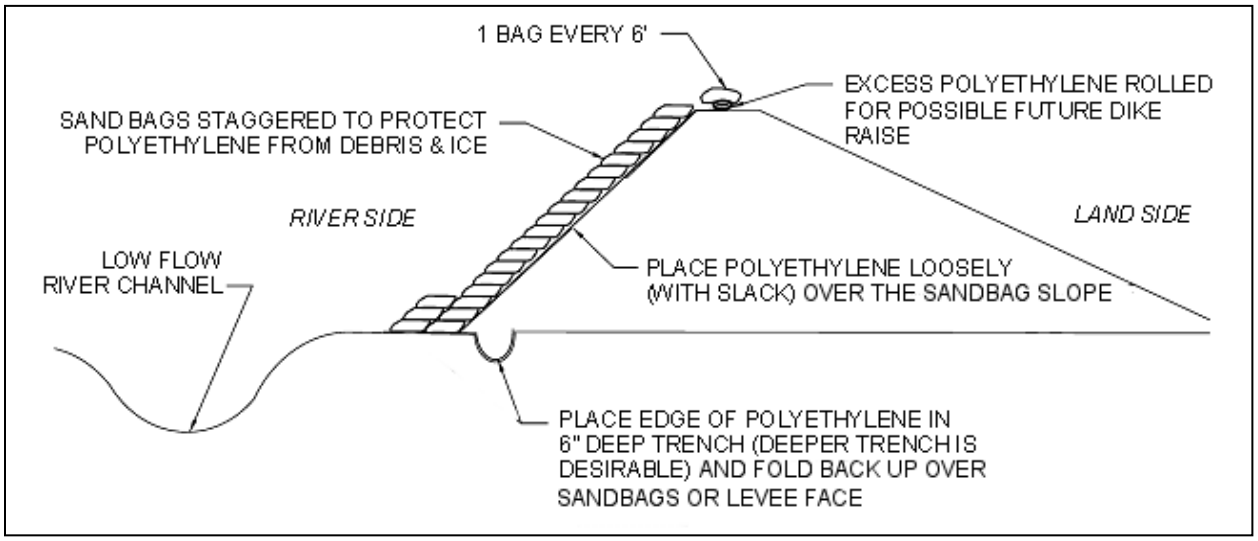

Figure 9 – Poly anchored within a trench – placed under dry conditions.

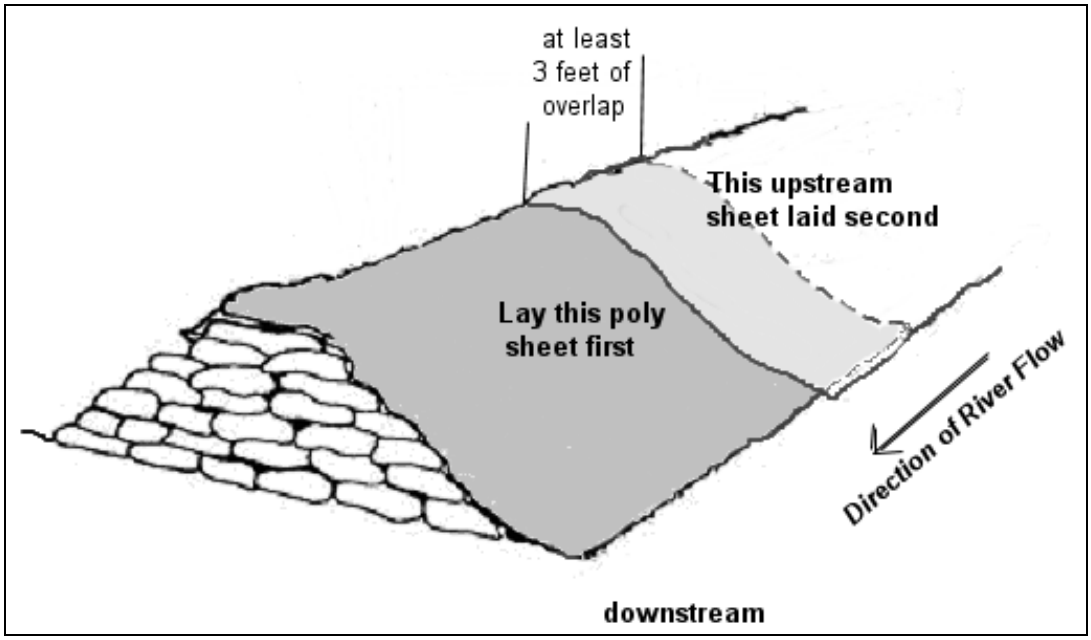

Figure 10 – Poly placement from downstream to upstream with overlap shown.

Table 4-1a: Estimated Number of Sandbags Per Linear Foot of Dike

Height in Feet	Bags Required
1	6
2	21
3	45
4	78
5	120

Table 4-1b: Number of Sandbags Required For Length of Dike

DIKE HEIGHT	50 FT	100 FT	200 FT	250 FT	300 FT	350 FT	400 FT	450 FT	500 FT
1 Foot	300	600	1,200	1,500	1,800	2,100	2,400	2,700	3,000
2 Feet	1,050	2,100	4,200	5,250	6,300	7,350	8,400	9,450	10,500
3 Feet	2,250	4,500	9,000	11,250	13,500	15,750	18,000	20,250	22,500
4 Feet	3,900	7,800	15,600	19,500	23,400	27,300	31,200	35,100	39,000

Plate 2 and Plate 3 summarize the methods of anchoring poly sheeting along the riverward face of the dike. Plate 2 shows placement when dry conditions are present, and Plate 3 shows placement in the wet, after water has risen to a level along the side of the sandbag dike or levee.

4.5 Number of Sandbags Needed

The information in Table 6.1 and Plate 1 indicates the approximate number of sandbags that are needed for dikes of various heights and lengths. Note that 5 feet high is the practical limit of a sandbag dike. If a higher sandbag dike is needed, alternative means of construction should be considered. The preferred height limit is 3 feet.

4.6 Commercial equipment available for sandbagging operations

Plate 11 contains examples of commercial products and tools that are reported as useful for sandbagging operations. Listing these item does not constitute approval or endorsement of the product. Where possible, means to fabricate similar tools locally are included as well.

5 Earth Fill Levees

Earth fill levees, rather than sandbag dikes, are the preferred type of emergency flood barrier for large-scale flood fights, and their construction should be directed by experienced flood-fight workers.

5.1 Foundation Preparation

Prepare levee footprint as follows prior to placing fill. Remove snow from ground surface, and place snow on riverside of levee to eliminate ponding of water behind levee when snow melts. Trees should be cut and the stumps removed. All obstructions above the ground surface should be removed, if possible. This will include brush, structures, snags, and similar debris. The foundation should then be stripped of topsoil. *NOTE: Clearing and grubbing, structure removal and stripping should be performed only if time permits.* Stripping may be impossible if the ground is frozen; in this case, the foundation should be ripped or scarified, if possible, to provide a tough surface for bond with the embankment. If stripping is possible, the material should be pushed landward of the toe of levee and windrowed or heaped.

Every effort should be made to remove all ice or frozen ground. Frost or frozen ground can give a false sense of security in the early stages of a flood fight. It can act as a rigid boundary and support the levee; however, on thawing, soil strength may be reduced sufficiently for cracking or development of slides. It also forms an impervious barrier to prevent seepage. This may result in a considerable build up in pressure under the soils landward of the levee, and, upon thawing, pressure may be sufficient to cause sudden failure of the foundation material resulting in piping , slides, and boils. If the ground is frozen, it must be monitored, and one must be prepared to act quickly if sliding or boiling starts.

5.2 Levee Fill

Earth-fill materials for emergency levees will come from local borrow areas. An attempt should be made to use materials that are compatible with the foundation materials as explained below. However, due to time limitations, any local materials may be used if

reasonable construction procedures are followed. The materials should not contain large frozen pieces of earth.

1. **Clay Fill.** The majority of earth fill levees erected in recent floods consisted of clay or predominantly clayey materials. Clay is preferred because the cross-section width can be made smaller with steeper side slopes. Also, clay is relatively impervious and has relatively high resistance to erosion in a compacted state. A disadvantage in using clay is that adequate compaction is difficult to obtain without proper equipment. Another disadvantage is that if the clay is wet, subfreezing temperatures may cause the material to freeze in the borrow pit and in the hauling equipment. Cold and wet weather could cause delays and should definitely be considered in the overall construction effort.
2. **Sand Fill.** If sand is used, the cross-section of the levee should comply as closely as possible with recommendations described in the following design section. Flat slopes are important, as steep slopes without poly coverage will allow seepage through the levee to outcrop high on the landward slope and may cause slumping of the slope and eventual failure.
3. **Silt.** Material that is primarily silt should be avoided, and, if it must be used, poly sheeting must always be applied to the river slope. Silt, upon wetting, tends to collapse under its own weight and is very susceptible to erosion.

5.3 Levee Design Section

The dimensions of the levee design section are generally dictated by the foundation soils and the materials available for construction. Therefore, even under emergency conditions, an attempt should be made to make the embankment compatible with the foundation. Information on foundation soils should be requested and considered, if available from local officials or engineers. The three foundation conditions and the levee design sections described below are classical and idealized, and assume a sand foundation, a clay foundation, or a thin clay layer over sand foundation. Actual field conditions generally depart from the ideals to various degrees. However, the described levee design sections for each foundation should be used as a guide to reduce the likelihood of serious flood fight problems during high water.

In determining the top width of any type of section, consideration should be given to whether a revised flood level forecast will require additional fill to be placed. A top width adequate for construction equipment will facilitate raising the levee. Finally, actual levee construction will, in many cases, depend on available time, materials, and right-of-way access.

1. **Sand Foundation** → Pervious and permeable (readily allowing water to pass through).
   a. ***Sand Section.*** Use a ratio of 1V (Vertical) to 3H (Horizontal) on the riverside slopes, and a ratio of 1V to 5H on the landward slope, with a 10-foot top width.

b. *Clay Section.* Use a ratio of 1V to 2-$^{1}/_{2}$H for both the riverside and landside slopes. The bottom width of the levee section should comply with creep ratio criterion; i.e., L (across bottom) should be equal to C x H; where C=9 for fine gravel and 15 for fine sand in the foundation, and H is levee height. This criterion can be met by using berms consisting of material placed on either the landward or riverward side of a levee that extends beyond the normal levee foot print. These berms are placed to control or relieve uplift pressures and lengthen the seepage path, although they will not significantly reduce the volume of seepage. Berms are not as high as the levee itself, and thickness should be 3 feet or greater.

2. **Clay Foundations** → Impervious (does not allow water to pass through)

   a. *Sand Section.* Same as paragraph 1.a. above.

   b. *Clay Section.* Use a ratio of 1V to 2-1/2H for both the riverside and landside slopes.

3. **Clay Layer over Sand Foundation**

   a. *Sand Section.* Use the same design as paragraph 1.a. above. In addition, a landside berm of sufficient thickness may be necessary to prevent rupture of the clay layer. The berm may be composed of sand, gravel, or clay material. Standard design of berms requires considerable information and detailed analysis of soil conditions. However, prior technical assistance may reduce berm construction requirements in any emergency situation.

   b. *Clay Section.* Use the same design as paragraph 1.b. above, "Clay Section, over Sand Foundation." A berm to prevent rupture may also be necessary as described above.

Proper compaction of the emergency levee is critical to stability. Use of standard compaction equipment such as a sheepsfoot roller, may not be feasible during emergency operations because of time constraints or limited equipment availability. It is expected that in most cases the only compaction available will be from hauling and spreading equipment, such as dump trucks and dozers.

5.4 Scour Protection for Emergency Levees

Scour protection may be required for the emergency levees. Factors that influence whether or not additional scour protection is required include levee material (clay levees tend to be much more resistant to scour than sand levees), channel velocities, presence of ice and /or debris in channel, wave action, and seepage. Methods of protecting levee slopes are numerous and varied. However, during a flood emergency, time, availability of materials, cost, and construction capability may limit the use of certain accepted methods of permanent slope protection.

Field personnel must decide the type and extent of slope protection the emergency levee will need. Several methods of protection have been established that prove highly effective in an emergency. Resourcefulness on the part of the field personnel may be

necessary for success. The following is a brief summary of some of the options for providing emergency scour protection for levees.

1. Polyethylene and sandbags. A combination of polyethylene (poly) and sandbags has proven to be one of the most expedient, effective and economical methods of combating slope attack in a flood situation. Poly and sandbags can be used in a variety of combinations, and time becomes the factor that may determine which combination to use. Ideally, poly and sandbag protection should be placed before water has reach to toe of the levee – "in the dry." However, many cases of unexpected slope attack will occur during high water, and a method for placement "in the wet" is covered below. Plate 2 and Plate 3 display suggested methods of laying poly and sandbags in the dry and in the wet, respectively. Because each flood fight project is unique (river, personnel available, materials, etc.), specific details of placement and materials handling will not be covered. Field personnel must be aware of resources available when using poly and sandbags.

   Anchoring the poly along the riverward toe is important for a successful job. It may be done in three different ways. The most successful is as follows: (1) Poly is placed flat on the ground surface away from the levee toe and one or more rows of sandbags placed over the flap. The poly is then unrolled over this bottom row of sandbags, and up the slope and over the top enough to allow for anchoring with sandbags. This method was shown on Figure 8 in the previous section, and is illustrated on Plate 4.

   Additional ways to anchor poly at the toe are (2) Poly is placed flat on the ground surface away from the levee toe, and sandbags are placed over the flap (Figure 8 and Plate 4); and (3) A trench is excavated along the toe of the levee, poly is placed in the trench, and the trench is backfilled (Figure 9 and Plate 2). Poly should always be placed from downstream to upstream along the slopes and the next sheet upstream overlapped by at least three feet (Figure 10). Overlapping in this direction prevents the current from flowing under the overlap and tearing the poly loose. Once the poly is placed, additional sandbags are needed on top of the poly to anchor the poly in place.

   It is mandatory that poly placed on levee slopes be held down. Unless extremely high velocities, heavy debris, or a large amount of ice is anticipated, an effective method of anchoring poly is a grid system of sandbags, as shown in Plate 2. A grid system can be constructed faster and requires fewer bags and much less labor than a total covering. Various grid systems include vertical rows of lapped bags, 2 by 4 lumber held down by attached bags, and rows of bags held by a continuous rope tied to each bag (Plate 3). For extreme conditions such as high velocity, excess seepage, ice or debris in the water or wave action, a solid blanket of bags over the poly should be used.

   Counterweights consisting of two or more sandbags connected by a length of ¼-inch rope can also be used to hold the poly down, and this is more suitable for

placement under wet conditions, as shown on Plate 3. The rope is saddled over the levee crown with a bag on each slope. The number and spacing of counterweights will depend on the uniformity of the levee slope and current velocity. For the more extreme conditions mentioned previously, a solid blanket of bags over the poly should be used. Sandbag anchors can also be formed at the bottom edge of the poly by bunching the poly around a fistful of sand or rock and tying a sandbag to each fist-sized ball. Wet placement may also be required to replace or maintain damaged poly or poly displaced by the action of the current.

Efficient placement of the poly requires that a sufficient number of the rope and sandbag counterweights be prepared prior to the placement of each poly sheet. Placement consists of first casting out the poly sheet from the top of the levee with the bottom weights in place, and then adding counterweights to slowly sink the poly sheet into place. In most cases the poly will continue to move down slope until the bottom edge reaches the toe of the slope. Sufficient counterweights should be added quickly to ensure that no air voids exist between the poly and the levee face and to keep the poly from flapping or being carried away in the current.

While the implementation of poly with sandbags is an effective remedy, it can be overused or misused. For example:

- On well-compacted clay embankments in areas of relatively low velocities, use of poly would be excessive, as compacted clay is unlikely to be scoured out.
- Placement of poly on landward slopes to prevent seepage must **never** be done. This will only force seepage to another exit that may prove more detrimental.

A critical analysis of each situation should be made before poly and sandbags are used, with a view toward less waste and more efficient use of these materials and available manpower. However, if a situation is doubtful, poly should be used rather than risk a failure.

2. **Placement of Riprap** is a positive means of providing slope protection and has been used in a few cases where erosive forces (caused by current, waves, or debris) were too large to effectively control by other means. Objections to using riprap when flood fighting are: (1) the relatively high cost, (2) a large amount may be necessary to protect a given area, (3) limited availability, and (4) little control over placement, particularly in the wet.
3. **Small groins** extending 10 feet or more into the channel can be effective in deflecting current away from the levees. Groins can be constructed using sandbags, snow fence, rock, compacted earth or any other substantial materials available. Preferably, groins should be placed in the dry and at locations where severe scour may be anticipated. Consideration of the hydraulic aspects of

placing groins should be given because haphazard placement may be detrimental. Hydraulic technical assistance should be sought if doubts arise in the use of groins. Construction of groins during high water will be very difficult and results will generally be minimal. If something other than compacted fill is used, some form of anchorage or bonding should be provided; generally snow fence anchored to a tree beyond the toe of levee is used, but junk car bodies can be tied together to act as anchors.

4. **Log booms** have been used to protect levee slopes from debris or ice attack. Logs are cabled together and anchored in the levee with a device referred to as a "dead man," often consisting of a concrete block with reinforcing bar, or another heavy anchor. The anchor should be of sufficient size and weight to hold the log boom in place. The log boom is floated out into the current and, depending on the log size, will deflect floating objects and protect the levee.
5. **Miscellaneous Measures.** Other available methods of slope protection include placement of straw bales pegged into the slope and spreading straw on the slope and overlaying with snow fencing. Both have been successful against wave action.

5.5 Flashboard and Box Levee Barriers

In addition to earth fill and sandbag levees, two additional types of flood barriers are flashboard and box levees. The construction of flashboards and box levees requires significant time and expense to complete, so they are not very practical for emergency situations unless constructed well in advance of a flood event. However, they may be suitable under certain circumstances. Both are constructed using lumber and earth fill, and they may be used for capping a levee or as a barrier in highly constricted areas. Construction details for these barriers are shown on Plate 5.

6 <u>Interior Drainage Treatment</u>

6.1 General

High river stages often disrupt the normal drainage of sanitary and storm sewer systems, render sewage treatment plants inoperative, and cause untreated sewage to back up within the system into homes and businesses, and eventually directly into river. When the river recedes, some of the sewage and natural storm water runoff may be trapped in low-lying pockets behind the constructed levees, causing the ponded area and soils to become contaminated.

Hastily constructed levees intended to keep out river waters may also seal off normal outlet channels for local runoff, creating large ponds on the landward side of the levee. As the ponded runoff level increases, the levee now becomes vulnerable from both sides, nullifying the protection provided even if the levee is not overtopped. In these cases the ponded runoff will need to pumped over the levee to the river side. Storm water sewers may also back up because of this ponding.

6.2 Preliminary Work

To arrive at a reasonable plan for interior drainage treatment, field personnel must obtain several items of information:

a. Size of drainage area.

b. Basin slope

c. Mean Annual Precipitation

d. Mean Basin Elevation

e. Pumping capacity and/or ponding required. If data are not available, can be estimated by hydraulic engineering personnel.

f. Basic plan for treatment.

g. Storm and sanitary sewer and water line maps, if available.

h. Location of sewer outfalls (both abandoned and in use).

i. Inventory of available local pumping facilities.

j. Probable location of pumping equipment.

k. Whether additional ditching is necessary to drain surface runoff to ponding and/or pump locations.

l. Location of septic tanks and drain fields abandoned and in use.

6.3 Determination of Pumping Requirements

Tables 6.1, 6.2 and 6.3, included below, provide values to be used to compute pump requirements.

Storm Water and Seepage Computation.

Storm Water Runoff (A>640 acres): Pumping Rate in gallons per minute (GPM) = BM

Storm Water Runoff (A<640 acres): Pumping Rate in gallons per minute (GPM) = KAM

B = a constant, which can be determined from Table 6.1;

K = a constant, which can be determined from Table 6.2;

A = the contributing drainage area in acres; and

M = a factor if substantial ponding is available (Table 6.3).

If floods greater than a 2 Year flood are expected, pumping provided should be above the "desirable pumping" capacities determined in this section. Note that the constants B and K from Tables 4.1 and 4.2 reflect relatively minor rainfalls mixed with snow, and damages from larger events are still possible. The regions for determining B and K values are defined on Figure 1.

a. ***Ponding.*** If substantial ponding areas are available, the required pumping can be reduced by the reduction factor M. To determine the M value, use the known pond volume or the following formula and Table 6.3.

Pond Volume = PA x Ave. Depth

where PA = pond surface area in acres at maximum allowable pond elevation.

Ave. Depth = Average depth of ponding in feet.

b. ***Seepage.*** A seepage allowance of 0 to 2 GPM per linear foot of levee should be added to the pumping rate determined from the above formula. If the foundation is relatively pervious assume 1 to 2 GPM per linear foot of levee. If the foundation consists of a thick clay layer, seepage will be negligible or 0 GPM.

Table 6.1 – Values of B for Computation of Pumping when contributing drainage area is greater than 1.0 square miles (640 acres)

Area	Desirable B value*
Region 1	$448.83 * 10^{[1.467+1.283 \log (DA) - 0.399 \log (S)]}$
Region 2	$448.83 * 10^{[-0.379 +0.840 \log (DA) + 0.837 \log (MAP)]}$
Region 3	$448.83 * 10^{[0.793 + .935 \log (DA) + 0.169 \log (S)]}$
Area	Minimum B value*
Region 1	$448.83 * 10^{[-2.6968+1.502 \log (DA) - 0.399 \log (S) + 0.939 \log (E)]}$
Region 2	$448.83 * 10^{[-2.754+0.924 \log (DA) + 1.079 \log (MAP) + 0.428 \log (E)]}$
Region 3	$448.83 * 10^{[0.481 + 1.056 \log (DA) + 0.169 \log (S)]}$

* The "desirable" B value represents a 2-year frequency runoff (50% exceedance flood). The "minimum" B value represents a 1.1-year frequency runoff (90% exceedance flood). Note: 448.83 GPM = 1 CFS.

DA = contributing drainage area in square miles
S = basin slope from the upstream elevation in the basin to the location of the pump in feet/mile.
E = mean basin elevation in feet (if unknown use 4000)
MAP = mean annual precipitation in inches (if unknown use 32)

Table 6.2 – Values of K for Computation of Pumping when contributing drainage area is less than 1.0 square miles (640 acres)

Area	Desirable K value*
Region 1	7 to 8
Region 2	6.5 to 7.5
Region 3	9 to 10
Area	Minimum K value*
Region 1	2 to 3
Region 2	2 to 3
Region 3	4 to 5

* The "desirable" K value represents a 2-year frequency rain plus snowmelt (50% exceedance flood). The "miminum" K value represents a 1.1-year frequency rain plus snowmelt (90% exceedance flood).

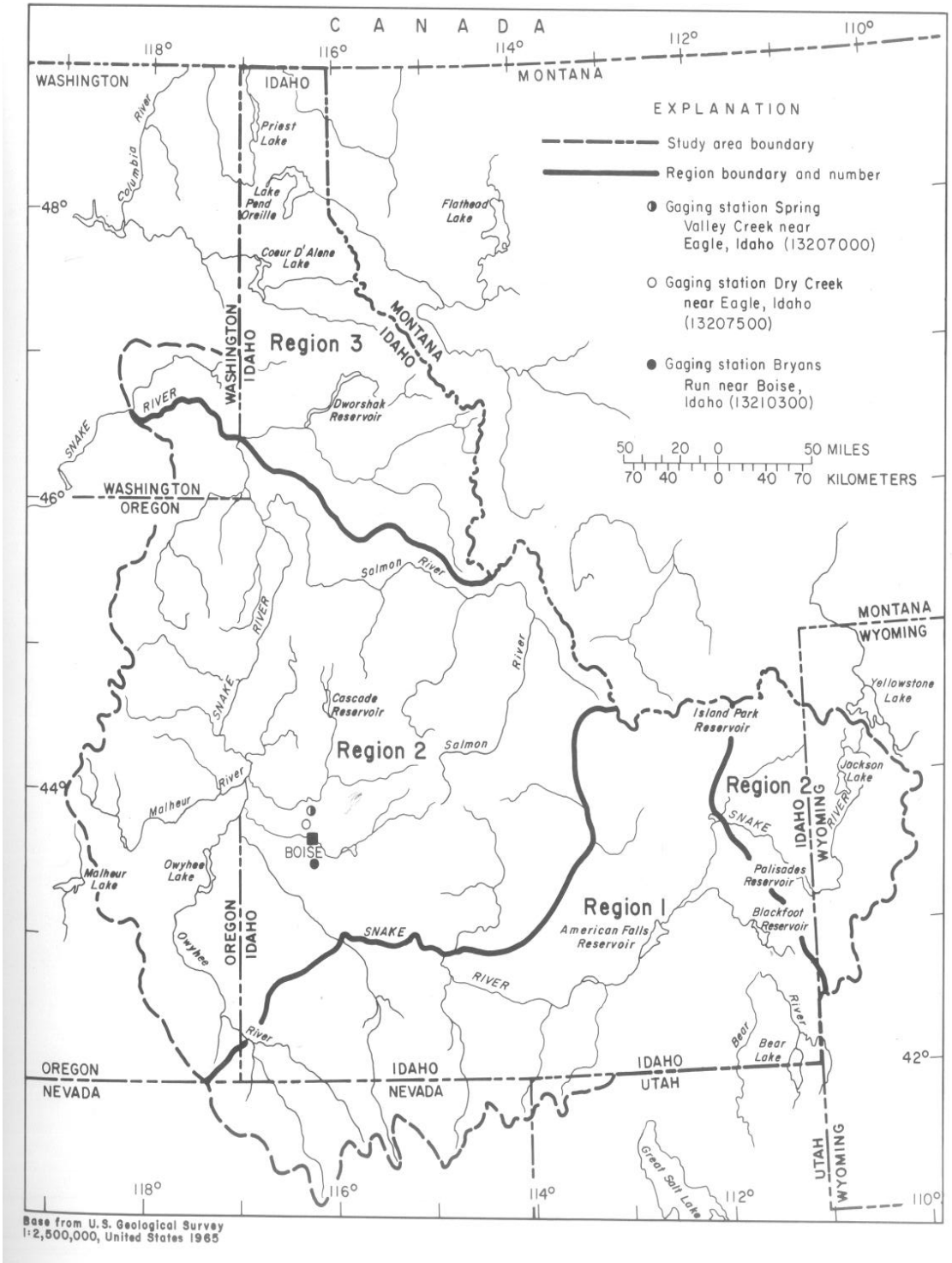

Figure 11 – Regions Map for determining B and K values.

Hypothetical Example. Local emergency management officials are considering the emergency construction of approximately 500 linear feet of levee, which will seal off the natural outlet for approximately 300 acres of local runoff draining to the Snake River. It is estimated that 5 acres of ponding area with a maximum depth of 4 feet will be available. Levee seepage is estimated at 0.5 GPM per linear foot of levee. What pumping capacities can be recommended for the removal of surface runoff and seepage through the levee?

Assuming this location is in Region 1, select K values from Table 6.2.

K minimum = 3

K desirable = 8

Assuming the average depth of the ponding area is 1/2 of the maximum depth:

Average depth = 1/2 x 4.0 = 2.0 feet

Pond Volume = 5 x 2.0 = 10 acre feet

Determine values for KA for a 300 acre drainage area:

KA = 3 x 300 = 900 GPM for the minimum pumping rate

KA = 8 x 300 = 2,400 GPM for the desirable pumping rate

Select M from Table 6.3

M = 0.4 for the minimum pumping rate and 0.9 for the desirable pumping rate.

Runoff pumping rate :

"minimum" pumping = 3 x 300 x 0.4 = 360 GPM

"desirable" pumping 8 x 300 x 0.9 = 2,160 GPM

Seepage:

500 linear feet x 0.5 GPM/foot = 250 GPM

Total Pumping:

"Minimum" Pumping = 360 + 250 = 610 GPM

"Desirable" Pumping = 2160 + 250 = 2,410 GPM

Table 6.3 – Values of M for Adjustment to Pumping Rate (M values in the center box)

	KA or B (GPM)												
Pond Volume (acre-ft)	0-500	500-1,000	1,000-1,500	1,500-2,000	2,000-3,000	3,000-4,000	4,000-6,000	6,000-8,000	8,000-10,000	10,000-12,000	12,000-20,000	20,000-40,000	40,000-60,000+
0 - 1	1	1	1	1	1	1	1	1	1	1	1	1	1
1 - 2	0.9	0.9	1	1	1	1	1	1	1	1	1	1	1
2 - 3.5	0.7	0.8	0.9	0.9	1	1	1	1	1	1	1	1	1
3.5 - 5	0.6	0.7	0.8	0.9	1	1	1	1	1	1	1	1	1
5 - 7.5	0.5	0.6	0.7	0.8	1	1	1	1	1	1	1	1	1
7.5 - 10	0.4	0.5	0.7	0.8	0.9	1	1	1	1	1	1	1	1
10 - 15	0.3	0.4	0.6	0.7	0.9	1	1	1	1	1	1	1	1
15 - 20	0.2	0.3	0.5	0.6	0.8	0.9	0.9	1	1	1	1	1	1
20 - 30	0.1	0.3	0.4	0.6	0.8	0.9	0.9	0.9	1	1	1	1	1
30 - 40	0.1	0.2	0.4	0.5	0.7	0.8	0.8	0.9	0.9	0.9	1	1	1
40 - 60	0.1	0.2	0.3	0.4	0.6	0.7	0.8	0.8	0.9	0.9	0.9	1	1
60 - 80	0.1	0.2	0.3	0.4	0.5	0.6	0.7	0.8	0.8	0.8	0.9	0.9	1
80 - 100	0.1	0.2	0.2	0.3	0.4	0.5	0.6	0.7	0.7	0.8	0.8	0.9	1

6.4 Pumps: Types, Sizes and Capacities

Tables 6.4 through 6.8 included below, provide information on specific pump capacities.

1. **Storm Sewer Pumps.** Table 6.4 indicates the size of pump needed to handle the full flow discharge from sewer pipes up to 24 inches in diameter. Table 6.5 shows sizes and capacities of agricultural type pumps that may be useful in ponding areas or in low areas adjacent to the flood barrier where a sump hole could be excavated. Table 6.6 lists full flow discharge capacities for clay sewer pipes laid on slopes of 0.001 and 0.005 feet per foot. Generally, the smaller pipes are laid on steeper slopes than are the larger pipes. Table 6.7 and Table 6.8 show sizes and capacities of Crisafulli and Flygt centrifugal pumps, respectively.
2. **Fire Engine Pumps.** The ordinary fire pumper has a 4-inch suction connection and a limited pumping capacity of about 750 GPM. Use only if absolutely necessary.

Table 6.4 – Matching Sewer Pipe Size to Pump Size

Sewer Pipe Diameter	Probable required pump size
6-inch	2-inch
8-inch	2- to 3-inch
10-inch	3- to 4-inch
12-inch	4- to 6-inch
15-inch	6- to 8-inch
18-inch	6- to 10-inch
21-inch	8- to 10-inch
24-inch	10- to 12-inch

Table 6.5 – Typical Pump Discharge Capacities for Ag. Pumps used in ponded areas.

Total dynamic head in feet	Capacity (Gallons per Minute)	Brake Horsepower
16-inch Regular Pump @ 540 rpm		
0	13,500	100
5	12,000	95
10	10,600	91
15	8,900	85
20	7,100	78
25	5,300	70
30	3,300	60
35	1,400	47

38.3	0	36.5
12-inch Regular Pump @ 540 rpm		
0	5,525	42
5	5,100	40
10	4,600	38
15	3,900	35
20	2,900	30
24.8	0	15.6

Table 6.6 – Flow Capacity of Clay Sewer Pipe on two different slopes (S)

Pipe Diameter	S = 0.001		S = 0.005	
	CFS	GPM	CFS	GPM
6-inch	0.19	85	0.35	156
8-inch	0.35	156	0.76	340
10-inch	0.65	292	1.60	720
12-inch	1.20	540	2.50	1,120
15-inch	2.1	945	4.5	2,020
18-inch	3.4	1,520	7.3	3,260
21-inch	5.0	2,230	11.2	5,000
24-inch	8.2	3,660	15.2	6,800

Table 6.7 – Crisafulli Pumps -- Model CP 2-inch to 24-inch Tractor driven

Pump Size	GPM	Elec. HP	Gas/Diesel HP
10 foot head			
2-inch	150	1	
4-inch	500	7.5	15
6-inch	1,000	10	20
8-inch	3,000	15	25
12-inch	5,000	25	40
16-inch	9,500	40	65
24-inch	25,000	75	140
20 foot head			
2-inch	130	1	
4-inch	490	10	20
6-inch	850	15	25
8-inch	2,450	20	35
12-inch	3,750	30	50
16-inch	8,000	45	85
24-inch	19,000	100	190
30 foot head			
2-inch	120	1	
4-inch	475	12	25
6-inch	795	20	35

8-inch	2,150	25	45
12-inch	3,450	35	70
16-inch	7,100	60	125
24-inch	16,600	125	250

NOTE: Use high head pumps for heads over 20 feet.

Table 6.8 -- Flygt Centrifugal Pumps (Submersible)

Pump Size	Capacity*	Horsepower
3-inch	90 - 150 GPM	1.3 - 2.0 HP
4-inch	100 - 250 GPM	2.7 - 3.5 HP
6-inch	1,150 GPM	30.0 HP
8-inch	2,300 GPM	29.0 HP
10-inch	3,300 GPM	62.0 HP

* (at 25-foot head)

3. **Pump Discharge Piping.** The Crisafulli pumps are generally supplied with 50-foot lengths of butyl rubber hose. Care should be taken to prevent damage to the hose. Irrigation pipe or small diameter culverts can also serve as discharge piping. The outlet of a pump discharge line should extend riverward far enough off the toe of the levee so that discharges do not erode the levee slope. The discharge end should be tied down or otherwise fixed to prevent its movement. These pumps must not be operated on slopes greater than 20 degrees from horizontal.

4. **Sanitary Sewage Pumping.** During high water, increased infiltration into sanitary sewers may necessitate increased pumping at the sewage treatment plant or at manholes at various locations to keep the system functioning. To estimate the quantity of sewage, allow 100 gallons per capita per day for sanitary sewage and an infiltration allowance of 15,000 gallons per mile of sewer per day. In some cases, it will be necessary to pump the entire amount of sewage, and in other cases only the added infiltration will have to be pumped to keep a system in operation.

   Example: Estimate pumping capacity required at an emergency pumping station to be set up at the first manhole above the sewage treatment plant for a city of 5,000 population and approximately 30 miles of sewer (estimated from map of city). In this case, it is assumed that the treatment plant will not operate at all.

   Computation:

   Sewage: $$\frac{5000\ persons\ x\ 100\ gal/person/day}{24\,hrs/day\ x\ 60\ minutes/hr} = 347\,GPM$$

   Infiltration: $$\frac{15000\ gal/minute/day\ x\ 30\ min}{24\,hrs/day\ x\ 60\ minutes/hr} = 312\ GPM$$

Thus, required pumping capacity: 659 GPM

If using a Flygt centrifugal pump from Table 6.8, use one 6-inch or three 4-inch pumps.

6.5 Metal Culverts

Pumping of ponded water is usually preferable to draining the water through a culvert since the tail water (drainage end of culvert) could increase in elevation to a point higher than the inlet, and water could back up into the area being protected. Installation of a flap gate at the outlet end may be desirable to minimize backup.

If a culvert is desired to pass water from a creek through a levee an engineering-based computation of the drainage basin is required to determine pipe size.

6.6 Preventing Backflow in Sewer Lines

Watertight sluice gates, or flap gates can be used to prevent backflow. Emergency stoppers may be constructed of lumber, sandbags, or other materials, using poly as a seal, preferably placed on the discharge end of the outfall pipe. Plate 6 and Plate 7 show examples of prefabricated pipe stoppers that can be placed in the pipe to block flows. Plate 8 and Plate 9 illustrate methods of sealing off the outlet openings of a manhole with standard materials that are normally available so that the manhole may be used as an emergency pumping station.

7 Flood Fight Problems

7.1 General

The problems that can arise during a flood fight are varied and innumerable. The problems covered below and in the prior section on Interior Drainage Treatment are those that are considered most critical to the integrity of any flood barrier system, permanent or temporary. It is impossible to enumerate in this handbook all the categories of problems, such as supplies, personnel, communication, etc., that field personnel must handle. Section 8 offers advice on this topic.

The most valuable asset of field personnel under emergency conditions is their common sense, based on sound knowledge of the flood hazard, and the resources available for the flood event. Many problems can be solved quickly and efficiently through the application of good common sense and sensitivity to human relations. Physical problems with the levees, dikes and related infrastructure can be identified early if a well organized river or levee patrol team with a good communication system exists. Finally, solutions to problems must take into account whether high water is present on levee slopes, or is over the river banks.

7.2 Monitoring Flood Works

Levees and expedient flood works (if any) should be constantly monitored during periods of high water. The discovery of problems early on may provide time for the repair or reinforcement of failing devices and systems. If severe damage is discovered,

emergency evacuation warnings can be given so that the remaining residents and flood workers can flee to higher ground ahead of the raging floodwaters. An effective monitoring program is essential for safety during flood responses.

Adhering to a scheduled levee maintenance program, especially mowing and eliminating growth of vegetation, is crucial to allowing proper levee inspection during normal river flow periods, as well as during high water or flood events.

Regularly monitoring any flood control works is important during normal operations, but is critical during high water. Look for change, any change, in the condition of the flood works. Change could indicate potential failure by one of the mode discussed below.

Inspect more frequently during high water, especially if there are known problems. If necessary, institute regular patrols. Keep safety and response time in mind; use teams, and equip the patrols with radios and other equipment to immediately call in problems, or to call for help. Avoid walking on the structures, if at all possible, especially if the earth is saturated from the high water.

7.3 Overtopping

Overtopping of a levee occurs when the water level exceeds the crest elevation of a levee and flows into the protected area. Since most emergency levees are in urban areas, overtopping should be prevented at any cost. Overtopping will generally be caused by (1) unusual hydrologic phenomena that cause a much higher stage than anticipated, e.g. heavy rainfall or an ice dam in the channel, (2) insufficient time in which to complete the flood barrier, or (3) unexpected settlement or failure of the barrier. Generally, emergency barriers are built two feet above the predicted water level. If the crest prediction is raised during construction, additional height must be added to the barrier. On an existing or completed barrier, predictions of increases to water levels or settlement of the barrier will call for some form of capping to raise the barrier. Capping should be done with earth fill or sandbags using normal construction procedures. Section 6.9 presents additional information and illustrations regarding overtopping and the possible consequences.

7.4 Seepage

Seepage is percolation of water through or under a levee and generally first appears at the landside toe. Seepage through the levee is likely to occur only in a relatively pervious section. Seepage, as such, is generally not a problem unless (1) the landward levee slope becomes saturated over a large area, (2) seepage water is carrying material from the levee, or (3) pumping capacity is exceeded. Seepage that causes severe sand boils and piping is covered in the following Section 6.5.

Seepage is almost impossible to eliminate and any attempt to do so may create a much more severe condition. Pumping of seepage should be held to a minimum, based on the maximum ponding elevation that can be tolerated without damages. In the past, attempts to keep low areas pumped dry resulted in sand boils, and additional time and

effort were then expended in trying to control these sand boils caused by pumping. Therefore, seepage should be permitted if no apparent ill effects are observed and if adequate pumping capacity is available. If seepage causes saturation and sloughing of the landward slope, the section should be flattened to a 1V to 4H ratio or flatter. Material for flattening should be at least as pervious as the existing embankment material to avoid a pressure build up. Do not place clay over sand to flatten a slope.

7.5 Sand Boils

1. **Description.** A sand boil is the rupture of the top foundation stratum landward of a levee caused by excess hydrostatic head in the substratum. Even when a levee is properly constructed and of such mass to resist the destructive action of flood water, water may seep through a sand or gravel stratum under the levee and break through the ground surface on the landside in the form of bubbling springs. When such a seep occurs, a stream of water bursts through the ground surface carrying with it sand or silt that is distributed around the hole in the shape of a cone. Depending on the magnitude of pressure and the size of the boil, it may eventually discharge relatively clear water or it may continue to carry quantities of sand and silt. Sand boils usually occur within 10 to 300 feet from the landside toe of the levee, but in some instances, have occurred up to 1,000 feet away.

2. **Destructive Action.** Sand boils can produce three distinctly different effects on a levee, depending on the condition of flow under the levee.

   a. ***Piping Flow.*** Piping is the active erosion of subsurface material as a result of substratum pressure and concentration of seepage in a localized channel. The flow breaks out at the landside toe in the form of one or more large sand boils. Unless checked, this flow causes the development of a cavern under the levee, resulting in the subsidence of the levee and possible overtopping. This case can be easily recognized by the slumping of the levee crown.

   b. ***Non-Piping Flow.*** In this case, the water flows under pressure beneath the levee without following a defined path, as in the case above. This flow results in one or more boils outcropping at or near the landside toe. The flow from these boils tends to undercut and unravel the landside toe, resulting in sloughing of the landward slope.

   c. ***Saturating Flow.*** In this case, numerous small boils, many of which are scarcely noticeable, outcrop at or near the landside toe. While no boil may appear to be dangerous by itself, the group of boils may cause saturation and flotation ("quickness") of the soil. This can reduce the shear strength of the material at the levee toe to such an extent that failure of the slope through sliding may result.

3. **Combating Sand Boils.** All sand boils should be watched closely, especially those within 100 feet of the toe of the levee. All boils should be conspicuously marked with flagging so that patrols can locate them without difficulty and

observe changes in their condition. A sand boil that discharges clear water in a steady flow is usually not dangerous to the safety of the levee. However, if the flow of water increases and the sand boil begins to discharge material, corrective action should be undertaken immediately. The accepted method of treating sand boils is to construct a ring of sandbags around the boil, building up a head of water within the ring sufficient to check the velocity of flow, thereby preventing further movement of sand and silt. Plate 10 illustrates and describes the techniques for ringing a boil with sandbags. Actual conditions at each sand boil will determine the exact dimensions of the boil and the flow of water from it, and the required sandbag ring.

In general, the following considerations should control construction of the sandbag ring: (1) the base width of the sandbag section on each side of the ring should be no less than 1-1/2 times the contemplated height, (2) weak soils near the boil should be included within the ring, thereby preventing a break through later, and (3) the ring should be sufficient size to permit sacking operations to keep ahead of the flow of water. The height of the ring should only be that necessary to stop movement of soil in the water, and not so high as to completely eliminate seepage. The practice of raising the ring to the river elevation is not necessary and may be dangerous in high stages. If seepage flow is completely stopped, a new boil will likely develop beyond the ring. This boil could erupt suddenly and cause considerable damage. Where many boils are found to exist in a given area, a ring levee of sandbags should be constructed around the entire area, and, if necessary, water should be pumped into the area to provide sufficient weight to counterbalance the upward pressure.

In the case of smaller sand boils, large diameter metal or concrete pipe can be placed around the boil to reduce the flow of soil material from the boil. In such cases, take care not to stop the water flow from the boil, only the material flow. It may be necessary to cut a hole in the side of the pipe to allow water to exit.

7.6 Erosion

Erosion of the riverside slope is one of the most severe problems that will be encountered during a flood fight. Emergency operations to control erosion include the use of polyethylene sheeting and sandbag anchors. Poly placement along the riverward face of the dike is discussed at length in Section 5.4, Scour Protection for Emergency Levees.

7.7 Storm Sewers and Sanitary Sewers

1. **Problems.** Existing sewers in the protected area may cause problems because of seepage into the lines, leakage through blocked outlets to the river, manhole pumps not spread throughout the sewer system, or old or abandoned sewer locations that were not found during pre-flood preparations. Any of these conditions can cause high pressures in parts of the sewer system and lead to collapse of the lines at weak points and manhole covers blowing off.

2. **Solutions.** During the flood fight, continued surveillance of possible sewer problems is necessary. If the water level in a manhole approaches the top, additional pumps in other manholes may alleviate the problem. In sanitary sewers, additional pumping may be required at various locations in the system to provide continued service to the homes in the protected area. When pumps are not available, manholes may have to be ringed with sandbags or contained by some other method, such as concrete culverts with a sandbag base that allows the water to rise up above the top of the manhole. Some leakage may occur that will require safe disposal.
3. To eliminate the problem of disposing of this leakage from manholes, the ring dike would have to be raised above the river water surface elevation. Doing so creates high pressures on the sewer and should not be done. As with sand boils, it is best to ring the manhole part way to reduce the head and dispose of any leakage that occurs.
4. Directly weighing down manhole covers with sandbags or other items is not recommended where high heads are possible as this will not work. A 10-foot head on a manhole cover 2 feet in diameter would exert a force of 2,060 pounds. Thus, a counterweight of more than one ton would have to be placed directly on the cover.

7.8 Closures

Closures consist of gaps in the flood barrier system that are to be left open until flood stage reaches a critical elevation, at which point they are blocked and become part of the flood barrier. The critical elevation must be based on the time required to activate the work crew and reach the site, get materials to the site, and complete the construction, along with how fast the river is expected to rise.

Typical examples of closures include roadways and railroad tracks where traffic is allowed to continue to cross the flood barrier until the water level reaches an elevation where the risk of flooding becomes unacceptable. The size and number of closures should be kept to an absolute minimum. Although the means of blocking closures can typically be implemented fairly quickly, unanticipated problems occurring at a critical time when closure activities are underway could result in resources being reallocated elsewhere. This could result in a hole in the line of protection. If water rises faster than expected, sealing the closure can become difficult.

7.9 Causes of Levee Failure

In addition to the problems covered above, the following conditions could contribute to failure:

- Joining of an earth levee to a solid wall, such as concrete or piling.
- Structures projecting from the riverside of levee.
- A utility line crossing or a drain pipe crossing through the levee fill.

- The elevation of the tops of “stop logs” on roads or railroad tracks are at a lower elevation than the top of the levee.
- Relying on railroad embankments as levees. Material comprising a railroad embankment may not be suitable as levee fill. Furthermore, the railroad embankment section often has a narrow top width and steep side slopes.
- Allowing pump discharge lines to discharge directly on the riverward levee slope. When discharge lines are allowed to discharge on the levee slope, severe erosion can occur, thus threatening the levee stability. Insure that outlets for pump discharge lines are placed riverward beyond the levee toe, and appropriately anchored to prevent movement.

To assist in presenting a consistent message, definitions and illustrations of specific types of levee failures are provide below, and illustrated on Figures 9 through 12.

- **Levee:** An earth embankment, floodwall, or structure along a water course whose purpose is flood damage reduction or water conveyance.

- **Overtopping**: Water levels that exceed the crest elevation of a levee and flow into protected areas

- **Breach:** A rupture, break, or gap in a levee system whose cause has not been determined

- **Overtopping Breach:** A breach whose cause is known to be a result of overtopping (system exceeded)

- **Failure Breach:** A breach in a levee system for which a cause of failure is both known and occurred without overtopping. Usually requires an investigation to determine cause.
-

The chart below (Figure 12) further defines the appropriate flooding descriptions that should used to correspond to the levee responses to rising water.

The diagrams that follow further illustrate different categories of levee failures and breaches versus performing as designed.

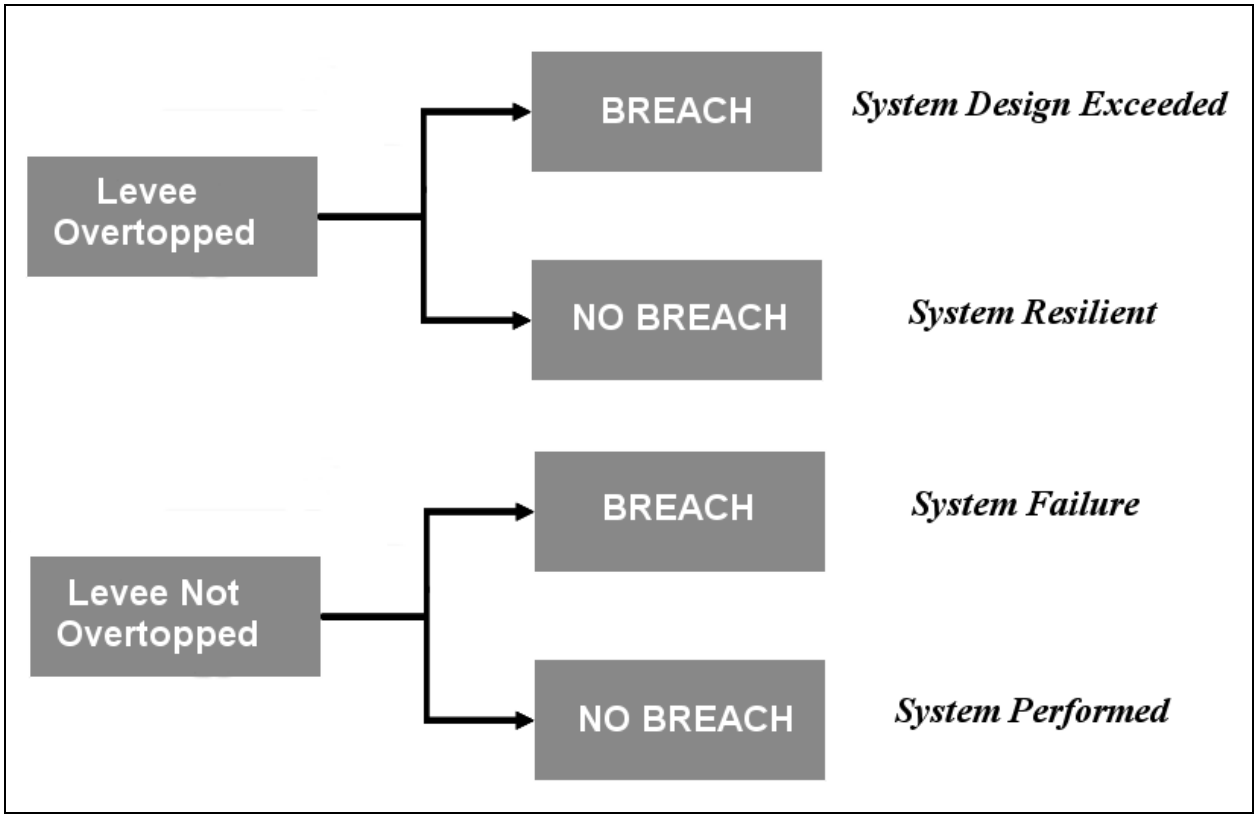

Figure 12 - Appropriate flooding descriptions corresponding to the levee responses to rising water.

Levee Overtopped (Figure 13) – When the flood excesses the level height of the levee, the levee will be overtopped. Water will flow over the top of the levee into the protected area. When this occurs the levee may be breached.

A breach occurs during overtopping due to damages caused by the water flowing over the top of the levee. Once breached the levee must be repaired to function during the next flood event.

In some cases, a levee may be overtopped without breaching (Non-Breach). In these cases the water does not erode the levee structure and the levee is still functional for the next event.

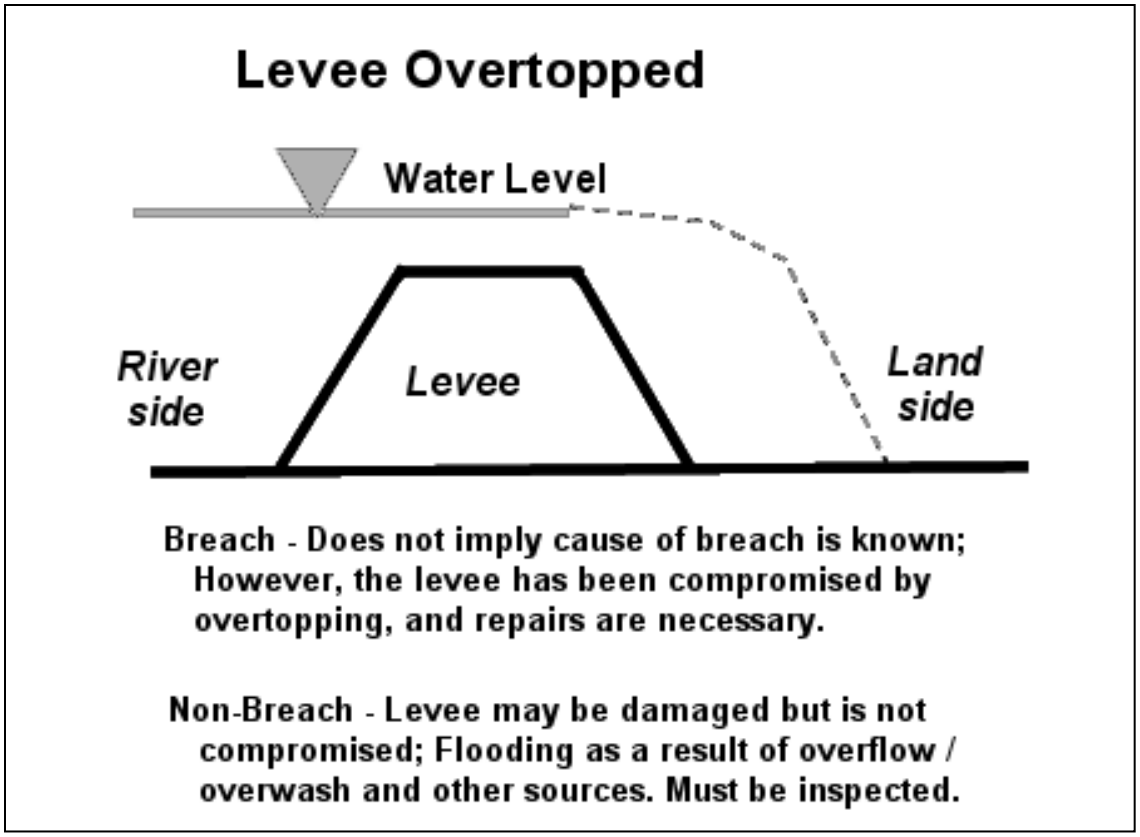

Figure 13 – Possible results when levee is overtopped.

A **levee failure** (Figure 14) occurs without overtopping when a breach occurs due to a failure of the embankment of the levee at a level below the top of the levee. Generally in this case, the cause of the failure and breach is known.

Even when the levee performs as designed (Figure 15), interior flooding can occur.

Some of the causes of interior flooding can be:

1. Seepage and Sand Boils – flow of water through the foundation below the levee and up into in the interior.
2. Interior Drainage – rain fall run off from behind the levee cannot get to the river and ponds, resulting in interior flooding.
3. Levee Penetrations – drainage conduits design to drain the interior area during low flows do not close properly during the flood event and allow water to flow from the river side to the interior side.
4. Pump Station Failures – pump stations designed to pump interior drainage over the levee can fail during an event due to pump failures loss of power.

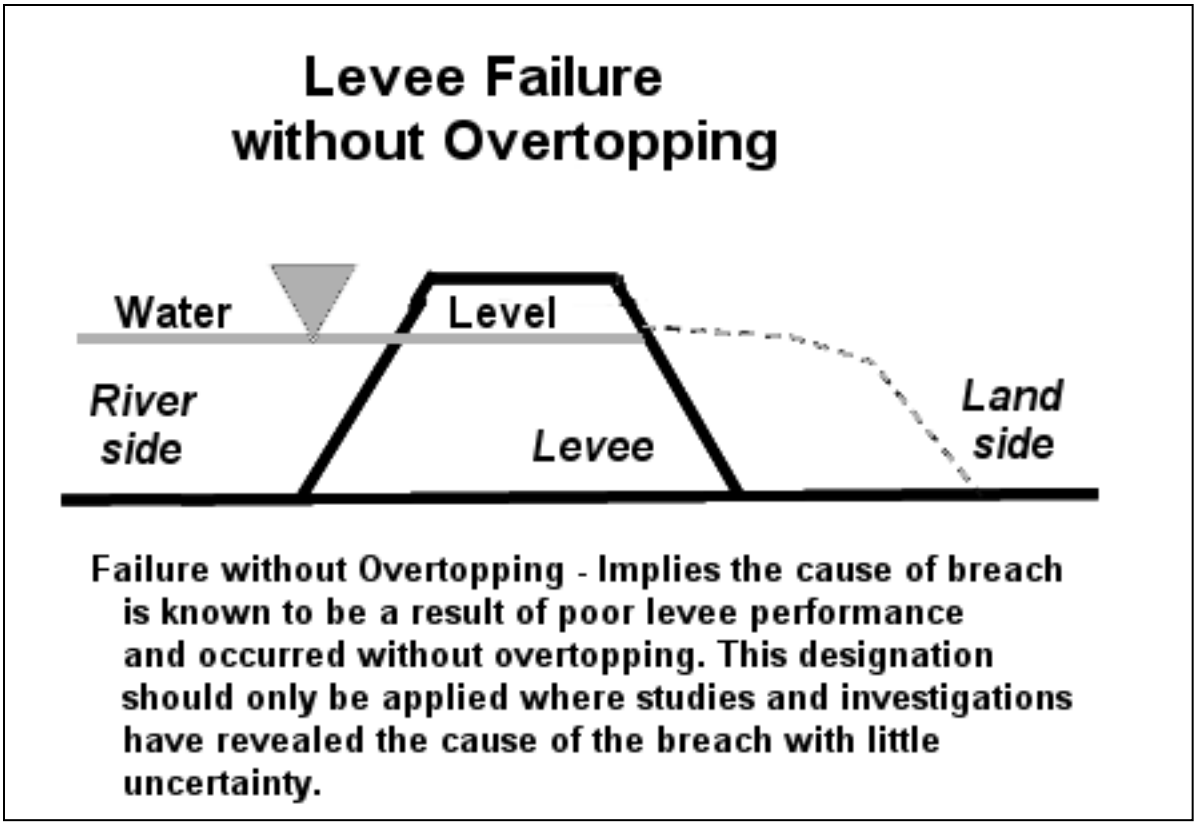

Figure 14 – Levee failure without overtopping.

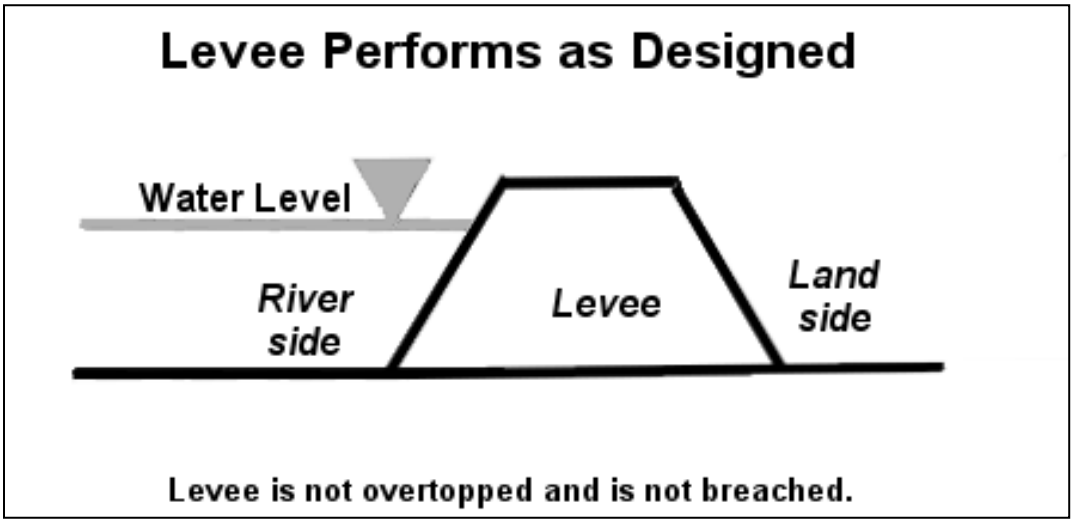

Figure 15 – Levee performs as designed.

8 Putting it all together

The final product of this effort is a flood response plan, sometime referred to as an emergency action plan. This handbook can't cover everything necessary for such a document, but compiling a plan for common reference is the best approach to ensuring that a community is prepared for a flood disaster.

The plan should include the following topics:

- Flood response task, by phase or river stage
- Organization
- Roles and responsibilities
- Available resources
- How to obtain additional resources (e.g., mutual aid)
- Sources of technical support and advice
- Communications
- Public information
- Evacuation and sheltering

Ideally, this is part of the local all-hazards plan, or comprehensive emergency management plan, maintained by the local emergency management office. If so, many of these items are already known. If not, they should be integrated with that plan.

FEMA Course G361, "Flood Response Operations", addresses community planning and response options for riverine flooding. While it does not deal with specialized flooding situations such as alluvial fan floods, coastal floods, flash floods, or floods related to ice jams, the same basic planning and response procedures could apply in these unique situations. This is available through the State Emergency Management Agency.

9 Recovering from a flood event

Receding flood waters signal the start of the recovery process. Recovery for most communities is an emotionally draining, time-consuming, and expensive proposition. The restoration process may place greater demands on government and private services than the flood response.

Training programs to prepare the public for returning to their flood-damaged homes should be the first step in the recovery process. These training programs should begin before the waters start to recede. While some training programs or briefings can be conducted in a classroom setting, most information will be disseminated to the public in the form of brochures, flyers, and newspaper articles. Information sources are summarized in Section 10.

Informational packets and information should be readily available to the public. Good distribution outlets include disaster assistance and recovery centers, supermarkets, hardware stores, and other locations where cleaning/restoration materials are sold. Other good locations to distribute materials are at entry or security check points that lead into the disaster zone. Children can bring packets of information home from school, and local media outlets can assist in this program.

It is important not to wait until the last minute to begin the distribution of recovery information. The earlier the information is made available to the public, the more effective it will be.

Communities will face many challenges after a flood event. Although community leaders should be able to look to the emergency plan for guidance during this difficult time, many challenges may be unique to the event. These include, among other things:

- Economic and Emotional Loss
- Restoration of Critical Infrastructure
- Clean-up

Added demands will be placed on many community and social agencies during the recovery phase. Many of these agencies are not normally included in the planning process and, therefore, may be completely overwhelmed in the aftermath of a disaster. These generally are:

- Sanitation and Health Officials
- Water Department
- Zoning, Building, and Business Departments
- Consumer Protection Departments
- Mental Health Services
- Public Information Officer

Finally, mitigation is the most important step communities can take to prevent flood losses. After a flood event, mitigation plans may be required if Federal disaster aid has been received, to identify procedures to reduce future flood losses.

Part of the mitigation plan includes new zoning and land use regulations and changes in building codes and inspection systems.

Encourage residents to buy flood insurance even if they do not live in the Special Flood Hazard Area.

10 List of Resources and Hyperlinks

Ready.gov from FEMA at http://www.ready.gov/

North Dakota State University, Extension Service, Flood Disaster Education website at: http://www.ag.ndsu.edu/disaster/flood.html

Dane County, Wisconsin, Department of Emergency Management website at: http://www.countyofdane.com/emergency/flood

American Red Cross, Disaster Event Preparedness webpage at: http://www.redcross.org/en/prepare/events provides links to flood, hurricane and other information.

How To Prepare For A Flood from FEMA:

http://www.fema.gov/media-library-data/1409002852888-3c5d1f64f12df02aa801901cc7c311ca/how_to_prepare_flood_033014_508.pdf

Pet Evacuation Guidelines from FEMA:

http://www.fema.gov/plan/prepare/animals.shtm

Livestock Evacuation Guidelines from FEMA: http://www.fema.gov/plan/prepare/livestock.shtm

U.S. Army Corps of Engineers, St. Paul District:

http://www.mvp.usace.army.mil/

U.S. Army Corps of Engineers, Walla Walla District:

http://www.nww.usace.army.mil/

National Water and Climate Center

http://www.wcc.nrcs.usda.gov/about/

National Weather Service

http://www.weather.gov/

Advanced Hydrologic Prediction Service (AHPS)

http://water.weather.gov/ahps/forecasts.php

Severe Weather 101: Flood Types from National Severe Storms Laboratory

http://www.nssl.noaa.gov/education/svrwx101/floods/types/

Flood Response Operations (FEMA G361):

Provided through your State Emergency Management Agency.

11 List of Plates Showing Emergency Flood Control Activities

1	Recommended Method for Sandbag Levee Construction
2	Recommended Method for Placement of Polyethylene Sheeting on Temporary Levees (when placed in the dry)
3	Recommended Method for Placement of Polyethylene Sheeting on Temporary Levees (when placed in the wet)
4	Recommended Methods for Anchoring Polyethylene Sheeting at the Levee Toe

5	Recommended Method for Flashboard or Box Levees
6	Recommended Method for Plugging Pipes, Method 1
7	Recommended Method for Plugging Pipes, Method 2
8	Recommended Method for Adapting Manhole for Pumping, Method 1
9	Recommended Method for Adapting Manhole for Pumping, Method 2
10	Recommended Method for Ringing Sand Boils

12 Handout: "Flood Fighting: How to use sandbags"

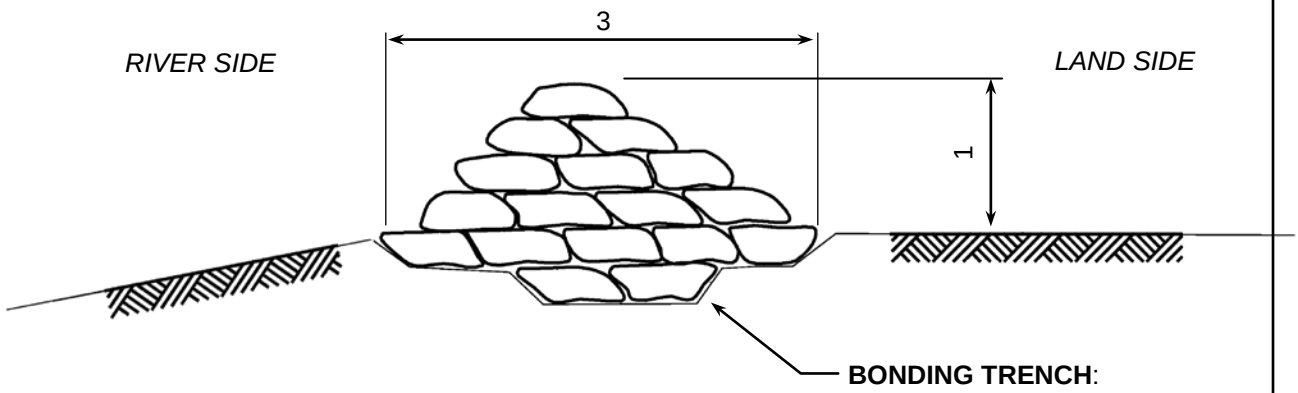

DIKE SECTION

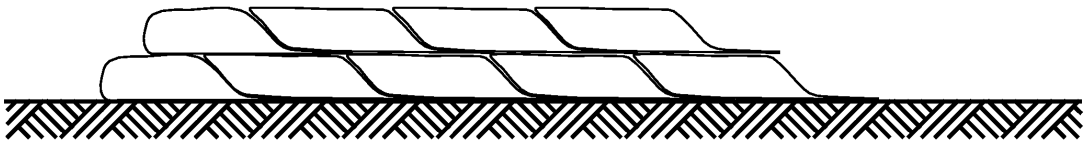

METHOD OF LAPPING SACKS

DIKE HEIGHT	NUMBER OF SAND BAGS REQUIRED FOR LENGTH OF DIKE									
	50 FT	100 FT	175 FT	200 FT	250 FT	300 FT	350 FT	400 FT	450 FT	500 FT
1 FT	250	500	750	1000	1250	1500	1750	2000	2250	2500
2 FT	850	1700	2550	3400	4250	5100	5950	6800	7650	8500
3 FT	1800	3600	5400	7200	9000	10800	12600	14400	16200	18000
4 FT	3100	6200	9300	12400	15500	18600	21700	24800	27900	31000

NOTES:

1. START UPSTREAM.
2. STRIP SOD BEFORE LAYING.
3. ALTERNATE DIRECTION OF SACKS WITH BOTTOM LAYER PARALLEL TO FLOW.
4. NEXT LAYER PERPENDICULAR TO FLOW, ETC.
5. LAP UNFILLED PORTION UNDER NEXT SACK.
6. TYING OR SEWING SACKS NOT NECESSARY.
7. TAMP THOROUGHLY IN PLACE, SACKS SHOULD BE APPROXIMATELY ½-FULL OF SAND.

US Army Corps of Engineers®
St. Paul District

EMERGENCY FLOOD CONTROL ACTIVITIES
RECOMMENDED METHOD FOR
SANDBAG LEVEE CONSTRUCTION

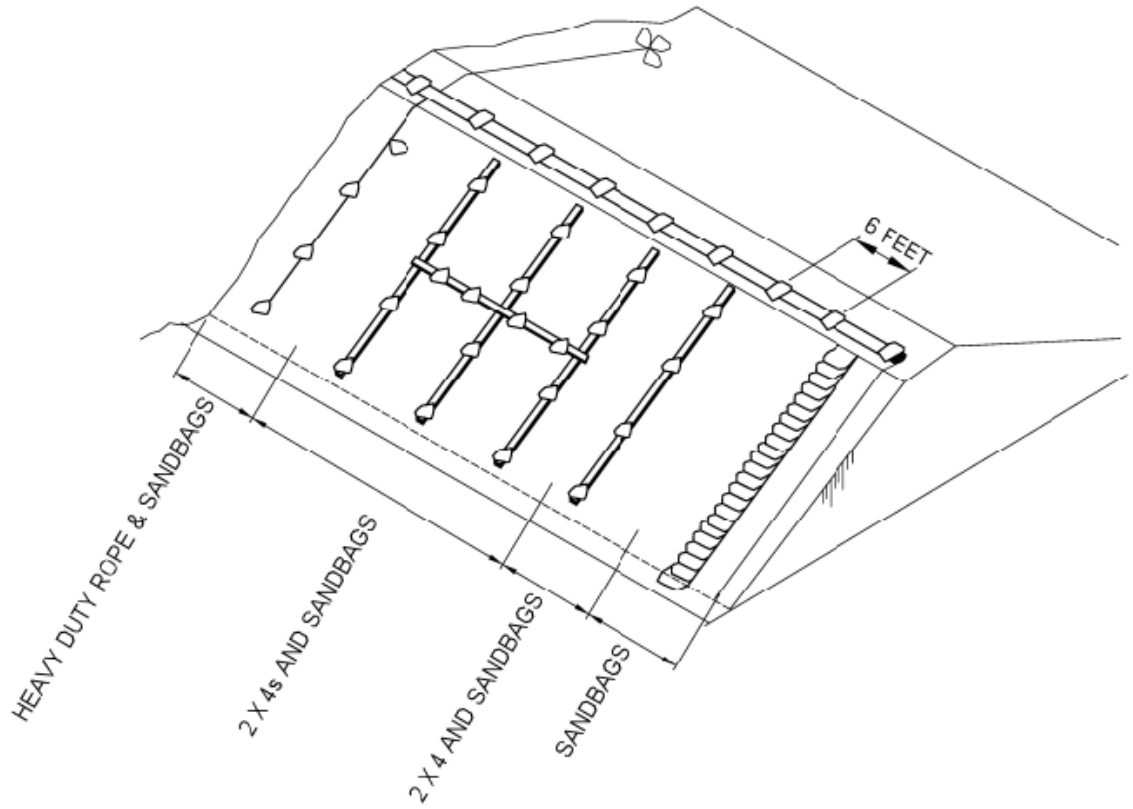

ONE METHOD OF ANCHORING POLYETHYLENE IN THE DRY

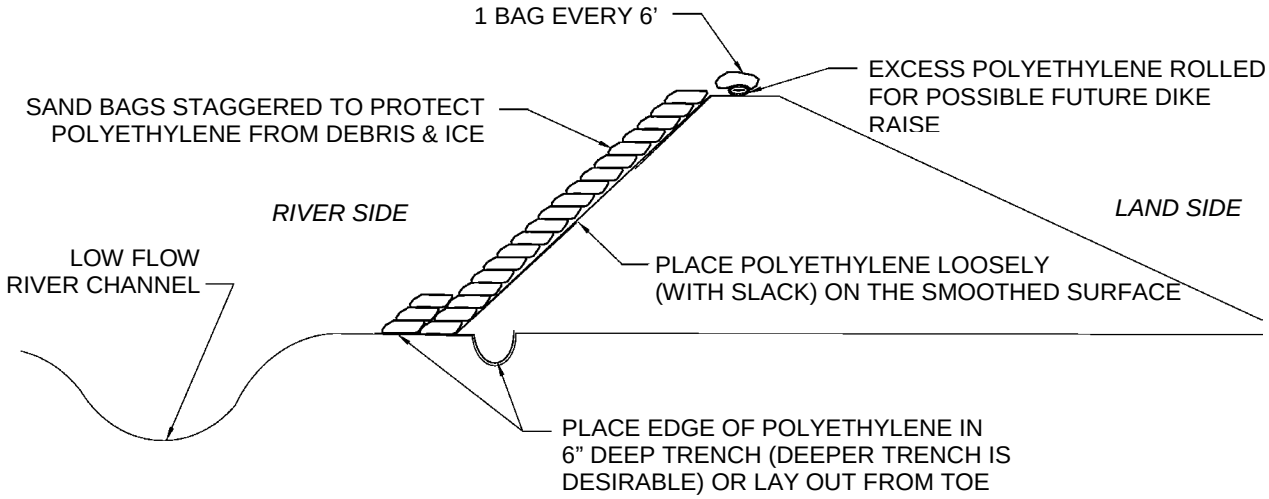

SECTION

RECOMMENDED POLYETHYLENE

1st - 6 MIL BLACK
2nd - 6 MIL CLEAR
3rd - 4 MIL BLACK
4th - 4 MIL CLEAR
5th - 2 MIL BLACK OR CLEAR
USE AS A LAST RESORT

US Army Corps of Engineers®
St. Paul District

EMERGENCY FLOOD CONTROL ACTIVITIES

RECOMMENDED METHOD FOR

PLACEMENT OF POLYETHYLENE SHEETING ON TEMPORARY LEVEES (WHEN PLACED IN THE DRY)

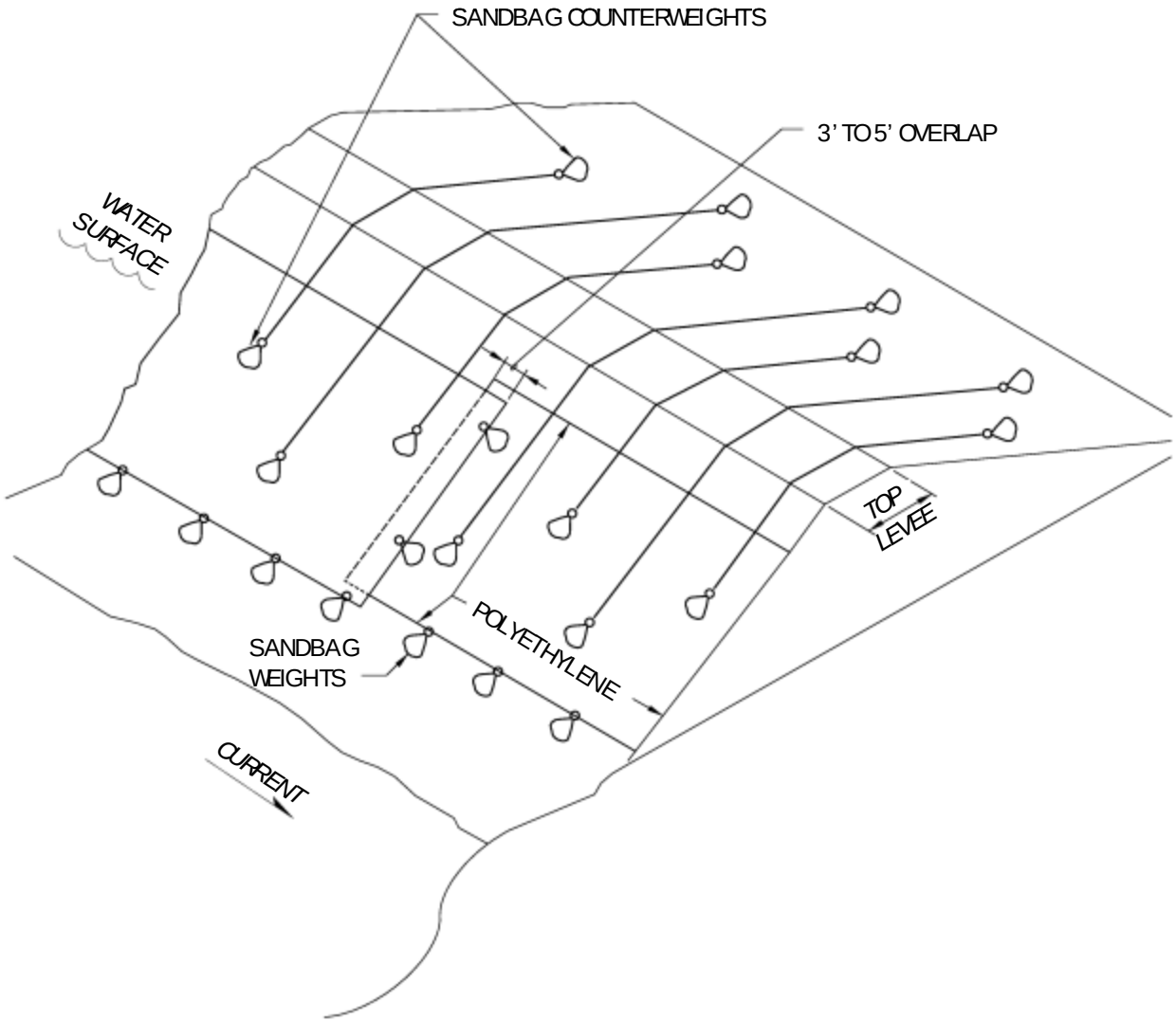

US Army Corps of Engineers®
St. Paul District

EMERGENCY FLOOD CONTROL ACTIVITIES

RECOMMENDED METHOD FOR

PLACEMENT OF POLYETHYLENE SHEETING ON TEMPORARY LEVEES (WHEN PLACED IN THE WET)

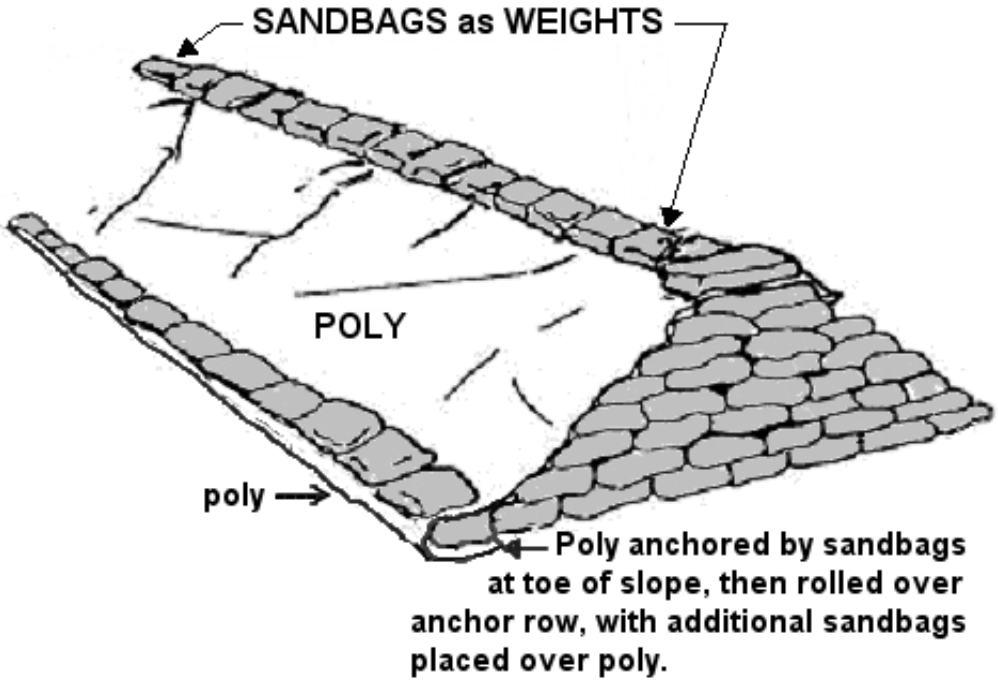

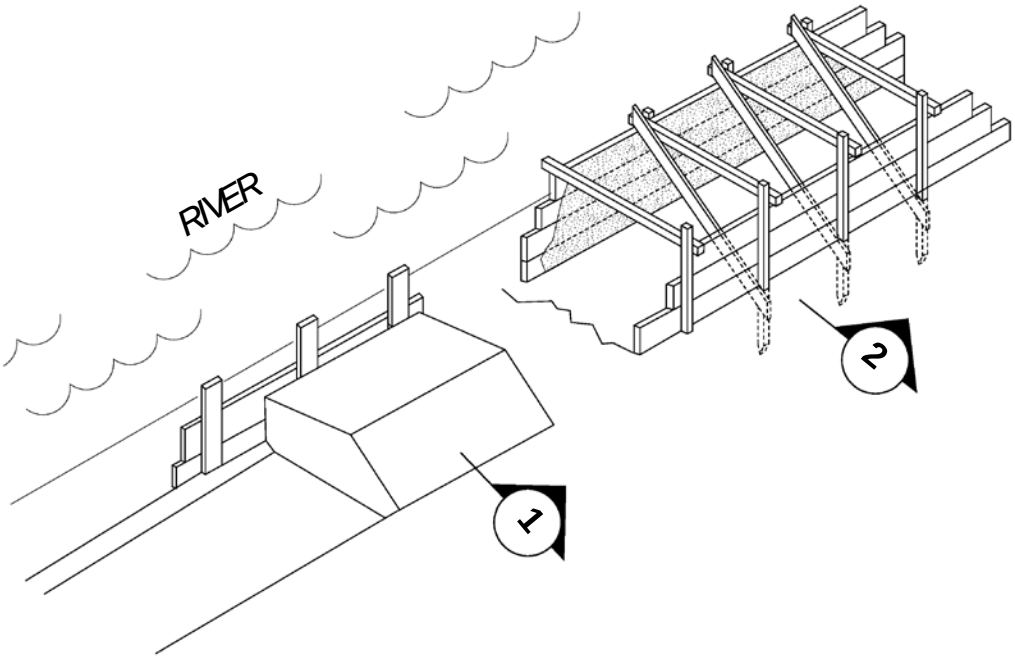

US Army Corps of Engineers®
St. Paul District

EMERGENCY FLOOD CONTROL ACTIVITIES
RECOMMENDED METHODS FOR
ANCHORING POLYETHYLENE SHEETING
AT THE LEVEE TOE

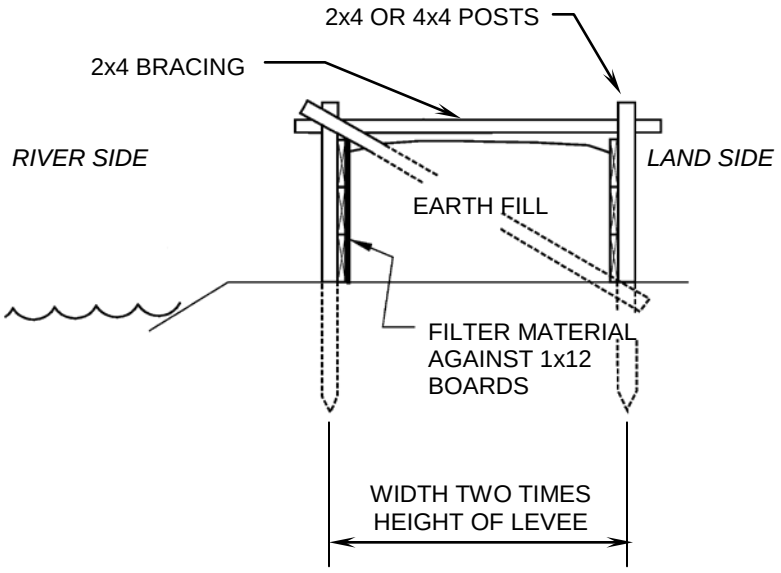

BOX LEVEE **2**

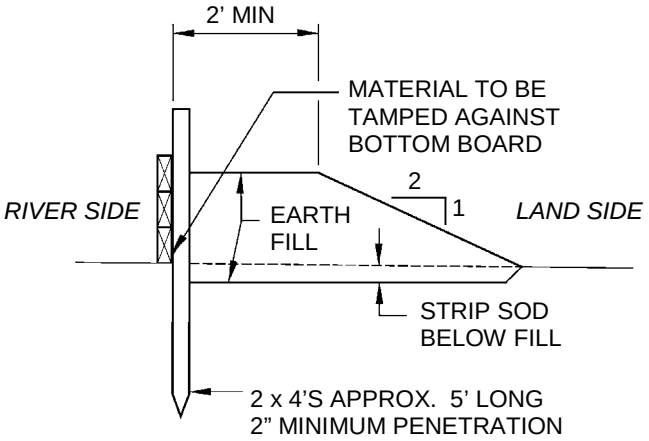

FLASH BOARD LEVEE **1**

US Army Corps of Engineers®
St. Paul District

EMERGENCY FLOOD CONTROL ACTIVITIES
RECOMMENDED DESIGN FOR TEMPORARILY
RAISING LEVEE HEIGHTS USING
FLASHBOARDS AND BOX LEVEES

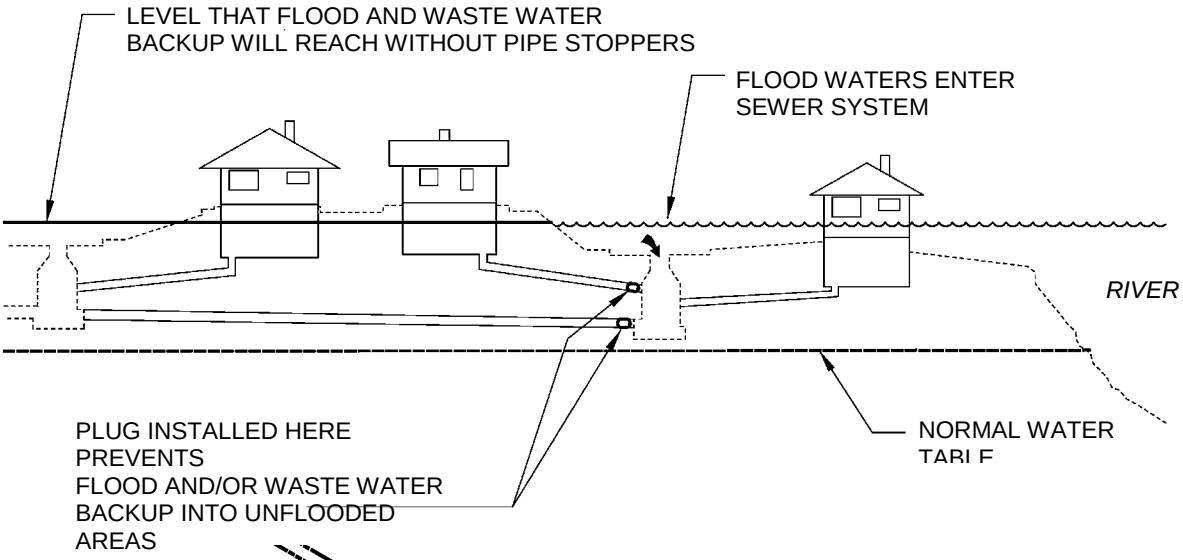

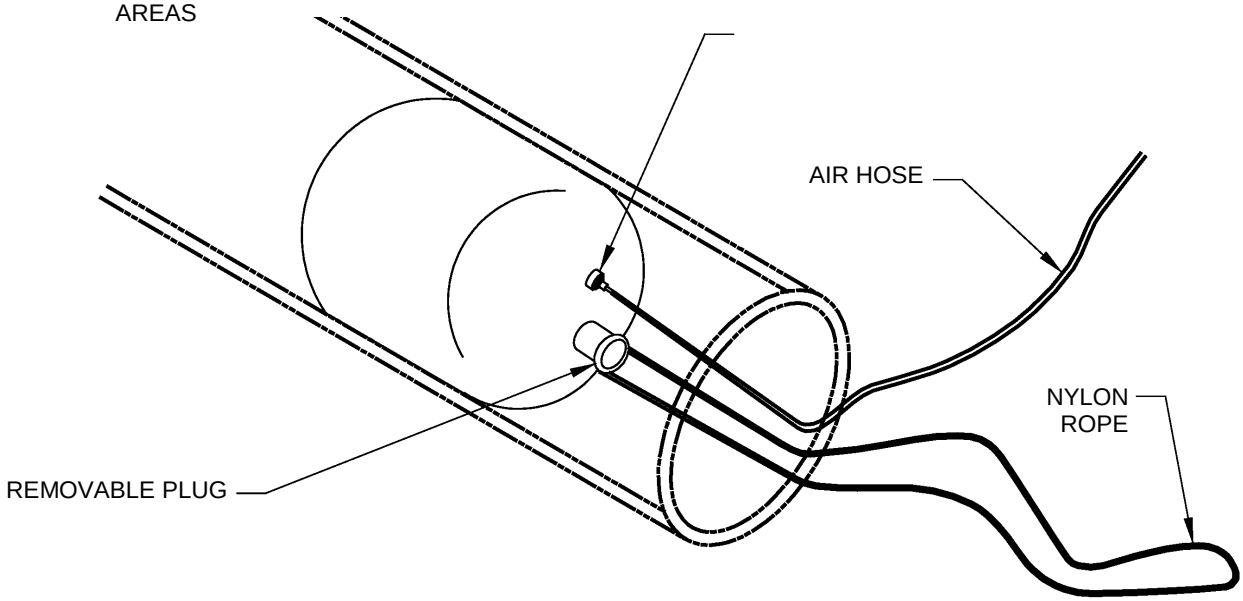

CHERNE INDUSTRIAL PIPE STOPPERS

IMMEDIATE DELIVERY OF PIPE PLUGS RANGING IN SIZE FROM 6 INCHES THROUGH 53 INCHES CAN BE MADE LOCALLY. THE CHERNE "MUNI-BALL PLUG" FITS STANDARD PIPE SIZES FROM 6 INCHES THROUGH 24 INCHES. PRICES RANGE FROM $43.20 THROUGH $780.00 FOR A WIDE RANGE OF PIPE STOPPERS, WITH SPECIAL CONFIGURATIONS AVAILABLE, SUCH AS BY-PASS VALVES FOR SEWAGE PUMP CONNECTION TO RELIEVE BACK-PRESSURE.

CHERNE INDUSTRIES
5700 LINCOLN DRIVE
MINNEAPOLIS, MN 55436
PHONE: 800-843-7584
FAX: 800-843-7585
http://www.cherneind.com/

US Army Corps of Engineers®
St. Paul District

EMERGENCY FLOOD CONTROL ACTIVITIES
RECOMMENDED METHOD FOR
PLUGGING PIPES
(METHOD 1)

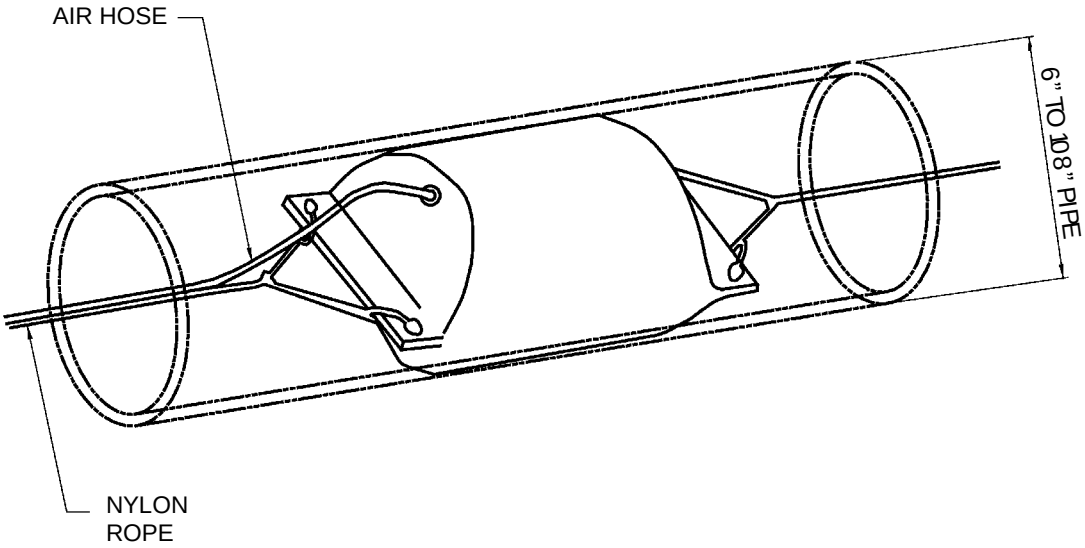

N.B. PRODUCTS PIPE STOPPER

N.B. PRODUCTS, INC. MANUFACTURES A RUBBERIZED PIPE STOPPER IN ALL STANDARD PIPE SIZES FROM 6" TO 108". THE COST FOR THESE DEVICES RANGES FROM $20.00 TO $3,000.00 ADDITIONAL EQUIPMENT REQUIRED FOR INSTALLING THE PIPE STOPPER ARE AN AIR HOSE KIT, AIR HOSE, AND NYLON ROPE. A TWO-WEEK SHIPPING PERIOD IS REQUIRED. MANUFACTURING LEAD TIME IS REQUIRED FOR SIZES OVER 60". ORDERS FOR THESE UNITS CAN BE PLACED TO:

N.B. PRODUCTS, INC.
ATTN: C.S. MCNULTY
35 BEULAH ROAD
NEW BRITAIN, PENNSYLVANIA 18901
215-345-1879

US Army Corps of Engineers®
St. Paul District

EMERGENCY FLOOD CONTROL ACTIVITIES
RECOMMENDED METHOD FOR
PLUGGING PIPES
(METHOD 2)

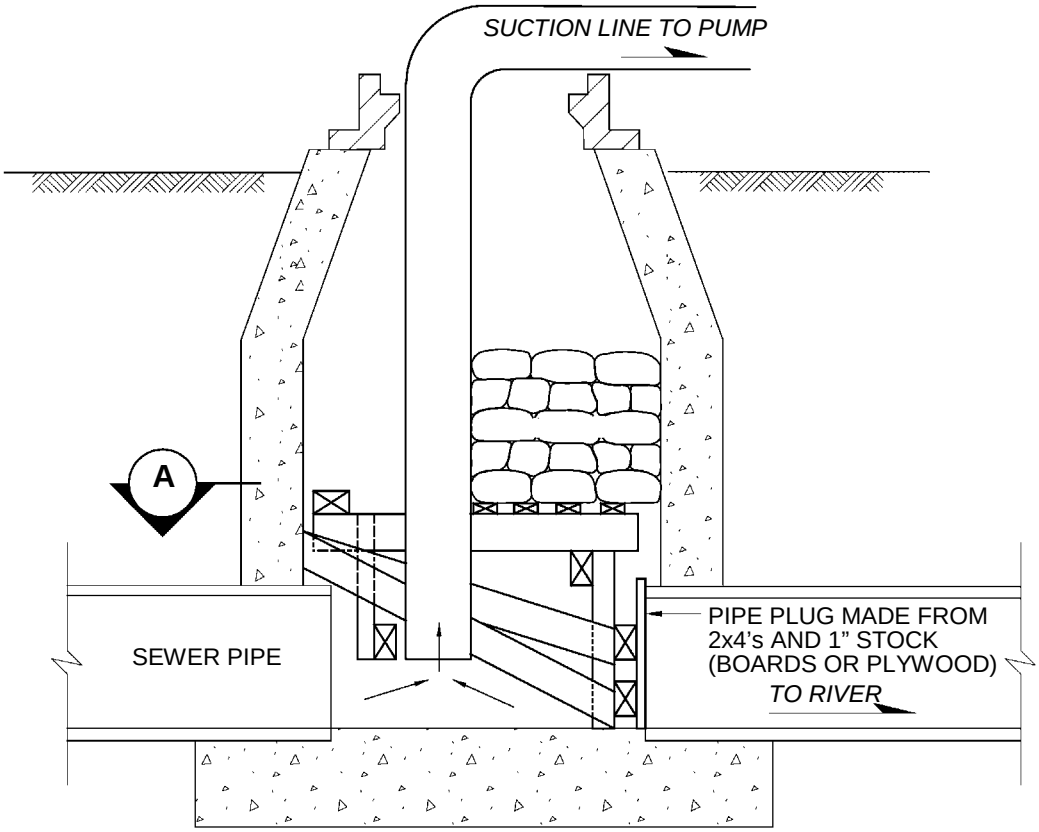

ADAPTING MANHOLE FOR PUMPING DURING FLOOD EMERGENCY

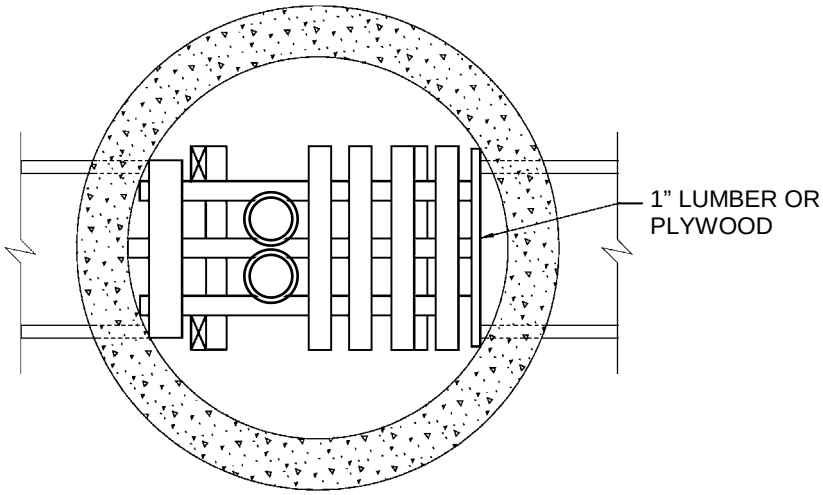

SECTION A

US Army Corps of Engineers®
St. Paul District

EMERGENCY FLOOD CONTROL ACTIVITIES
RECOMMENDED METHOD FOR
ADAPTING MANHOLE FOR PUMPING
(METHOD 1)

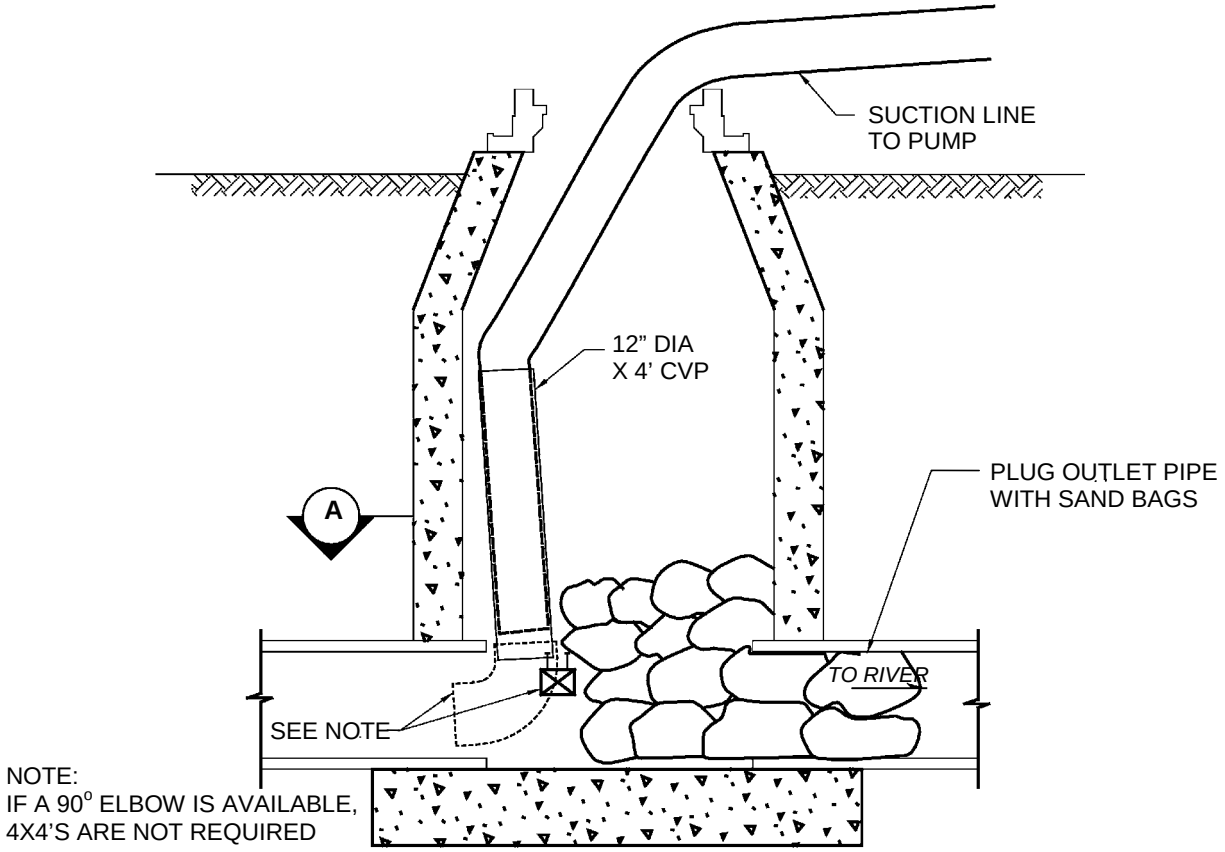

ADAPTING MANHOLE FOR PUMPING DURING FLOOD EMERGENCY

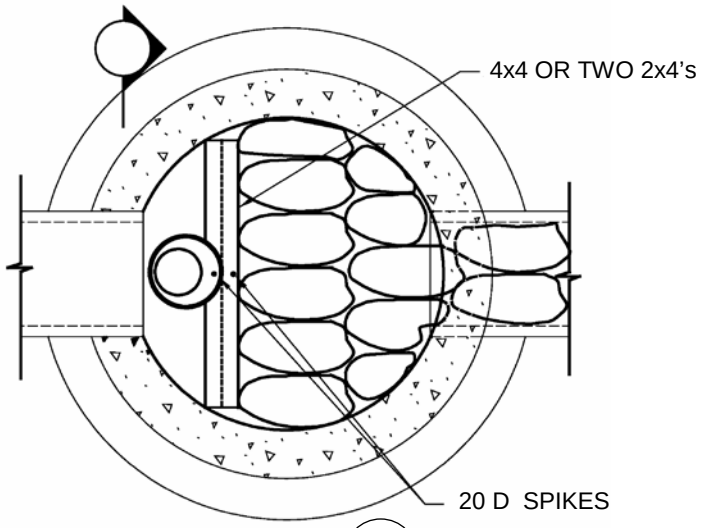

SECTION A

US Army Corps of Engineers®
St. Paul District

EMERGENCY FLOOD CONTROL ACTIVITIES
RECOMMENDED METHOD FOR
ADAPTING MANHOLE FOR PUMPING
(METHOD 2)

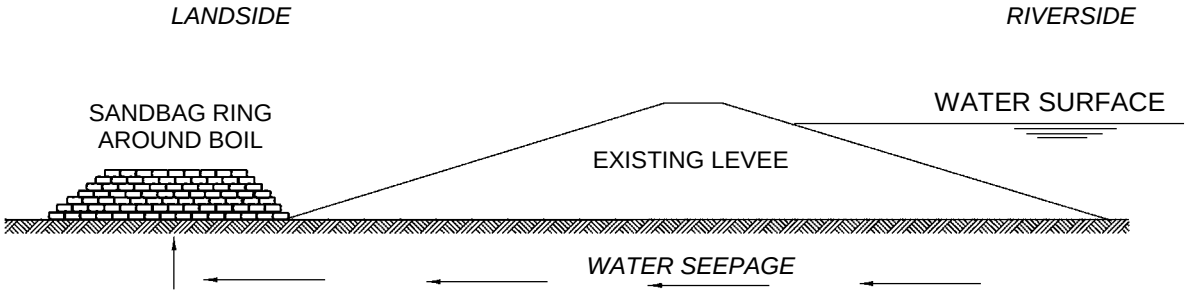

ELEVATION

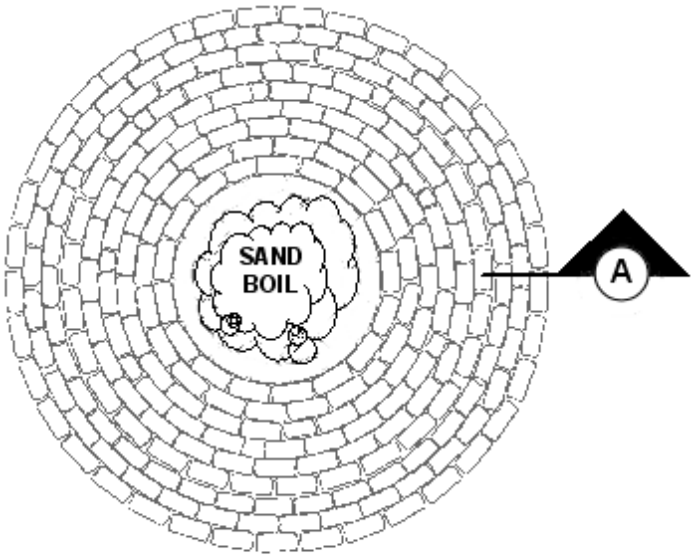

PLAN VIEW

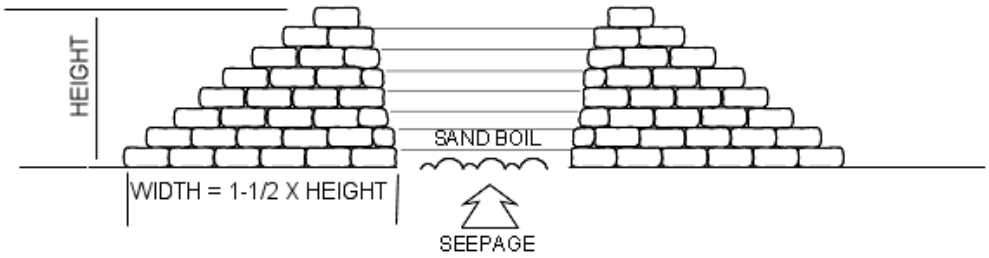

SECTIONAL ELEVATION — A

NOTES:

1. BOTTOM WIDTH TO BE NO LESS THAN 1-1/2 TIMES THE HEIGHT. TIE INTO LEVEE IF BOIL IS NEAR TOE.
2. ENTIRE BASE TO BE CLEARED AND SCARIFIED.
3. LOOSE EARTH TO BE USED BETWEEN ALL SACKS.
4. ALL JOINTS TO BE STAGGERED.

US Army Corps of Engineers®
St. Paul District

EMERGENCY FLOOD CONTROL ACTIVITIES

RECOMMENDED METHOD FOR

RINGING SAND BOILS

Flood Fighting: How To Use Sandbags

U.S. ARMY CORPS OF ENGINEERS **BUILDING STRONG®**

Sandbag Construction – The use of sandbags is a simple, but effective way to prevent or reduce flood water damage. Properly filled and placed sandbags can act as a barrier to divert moving water around, instead of through, buildings. Sandbag construction does not guarantee a water-tight seal, but is satisfactory for use in most situations. Sandbags are also used successfully to prevent overtopping of streams with levees, and for training current flows to specific areas.

Untied sandbags are recommended for most situations. Tied sandbags should be used only for special situations when pre-filling and stockpiling may be required, or for specific purposes such as filling holes, holding objects in position, or to form barriers backed by supportive planks. Tied sandbags are generally easier to handle and stockpile. However, sandbag filling operations can generally be best accomplished at or near the placement site, and tying of the bags might be a waste of valuable time and effort. If the bags are to be pre-filled at a distant location, due consideration must be given to transportation vehicles and placement site access.

The most commonly used bags are untreated burlap sacks available at feed or hardware stores. Empty bags can be stockpiled for emergency use, and will be serviceable for several years, if properly stored. Filled bags of earth material will deteriorate quickly. Commercial plastic sandbags, made from polypropylene, are also available from most bag suppliers. These will store for a long time with minimum care, but are not biodegradable. Thus, they have to be disposed of, or will remain around for a long time.

Do not use garbage bags, as they are too slick to stack. Avoid the use of feed or seed sacks, as they are too large to handle when filled even half full. If they must be used, keep the weight of filled bags down to what can be handled by one or two people (no more than 60 pounds). Where possible, use bags about 14-18" wide, and 30-36" deep.

A heavy bodied or sandy soil is most desirable for filling sandbags, but any usable material at or near the site has definite advantages. Coarse sand could leak out through the weave in the bag. To prevent this, double bag the material. Gravelly or rocky soils are generally poor choices because of their permeability.

Sandbag barriers can easily be constructed by two people, as most individuals have the physical capability to carry or drag a sandbag weighing approximately 30 pounds.

How to Fill a Sandbag – Filling sandbags is usually a two-person operation. Both people should be wearing gloves to protect their hands. One member of the team should place the empty bag between or slightly in front of widespread feet with arms extended. The throat of the bag is folded to form a collar, and held with the hands in a position that will enable the other team member to empty a rounded shovel full of material into the open end. The person holding the sack should be standing with knees slightly flexed, and head and face as far away from the shovel as possible.

The shoveler should carefully release the rounded shovel full of soil into the throat of the bag. Haste in this operation can result in undue spillage and added work. The use of safety goggles and gloves is desirable, and sometimes necessary.

Bags should be filled between one-third (1/3) to one-half (1/2) of their capacity. This keeps the bag from getting too heavy, and permits the bags to be stacked with a good seal.

For large scale operations, filling sandbags can be expedited by using bag-holding racks, metal funnels, and power loading equipment. However, the special equipment required is not always available during an emergency.

Sandbag Placement – Remove any debris from the area where the bags are to be placed.

Fold the open end of the unfilled portion of the bag to form a triangle. If tied bags are used, flatten or flare the tied end.

Place the partially filled bags lengthwise and parallel to the direction of flow, with the open end facing against the water flow. Tuck the flaps under, keeping the unfilled portion under the weight of the sack.

Place succeeding bags on top, offsetting by one-half (1/2) filled length of the previous bag, and stamp into place to eliminate voids, and form a tight seal.

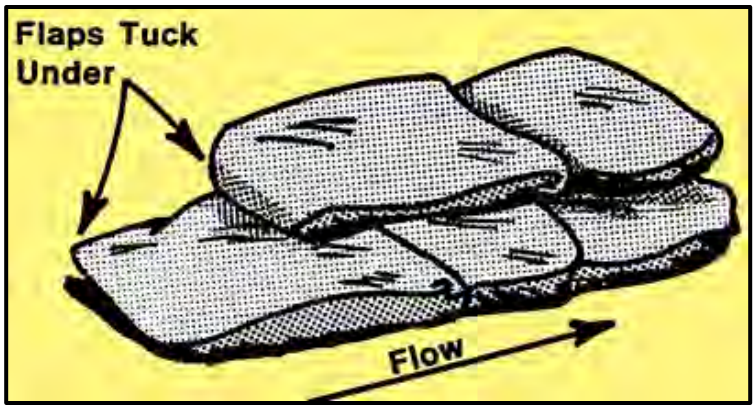

Stagger the joint connections when multiple layers are necessary. For unsupported layers over three (3) courses high, use the pyramid placement method.

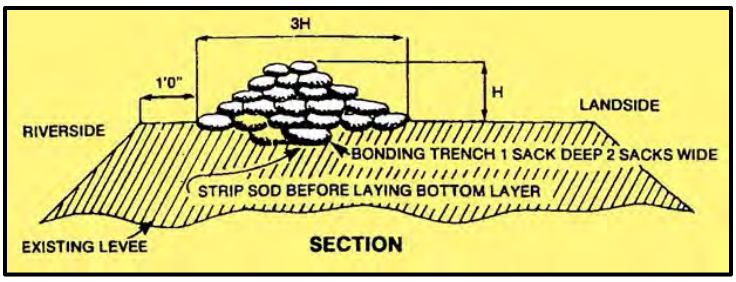

Pyramid Placement Method – The pyramid placement is used to increase the height of sandbag protection.

Place the sandbags to form a pyramid by alternating header courses (bags placed crosswise) and stretcher courses (bags placed lengthwise).

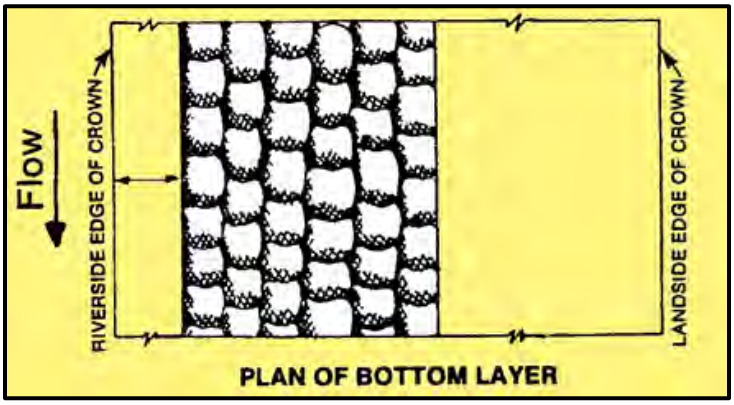

Stamp each bag in place, overlap sacks, maintain staggered joint placement, and tuck in any loose ends.

Ringing boils – A boil is a condition where water is flowing through or under an earth structure (such as a levee) that is retaining water. Free flowing water wants to move to lower elevations. If a levee is stopping floodwaters, the water may be able to find weak points to enter. This action is called "piping". If the water finds a large enough path, the flow will become visible, and is a serious threat to the integrity of the levee. Most boils occur in sand, silt, or some combination.

A boil is found on the landward side of the levee, or in the ground past the levee toe (the exact distance varies with local conditions). Possible boil sites can be identified by free standing or flowing water (other than culverts, pumps, etc). A boil can be found only by close inspection. A prime indicator is water bubbling (or "boiling"), much like a natural spring. Another is obvious water movement in what appears to be standing water.

Carefully examine the water for movement. Boils will have an obvious exit (such as a rodent hole), but the water may be cloudy from siltation, or the hole very small. If there is any movement in the water, carefully approach the site, disturbing the water as little as possible. Let the water settle, and look at the suspected site. If you see the hole, examine it carefully. If the water flow is clear, there are no problems as yet. If there is no distinct hole, the water flow is not a threat. Monitor the site regularly for changes, and take no other actions.

A dirty water flow indicates that the soil is being eroded by the water, and that could mean failure of the levee. A boil ring is the best solution. The idea is to reduce the water flow until the water is flowing clear, but not to stop the water flow. This acts as a relief valve for the water pressure; the water continues to flow, but is not eroding the material. If the water flow is stopped, the pressure will remain, and another boil will form.

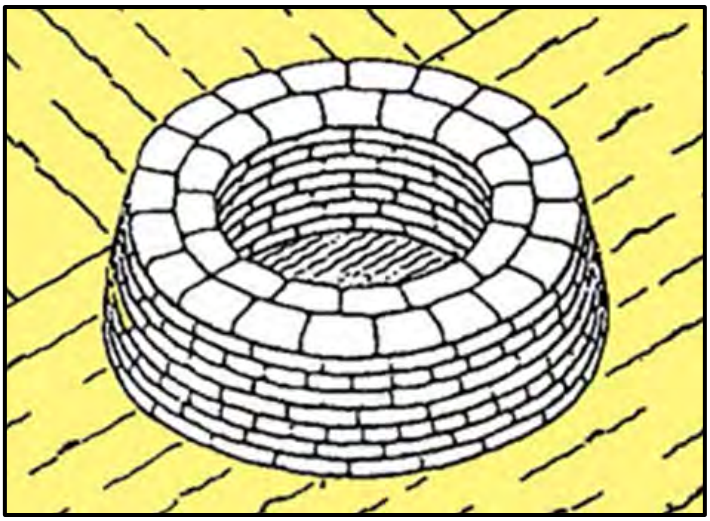

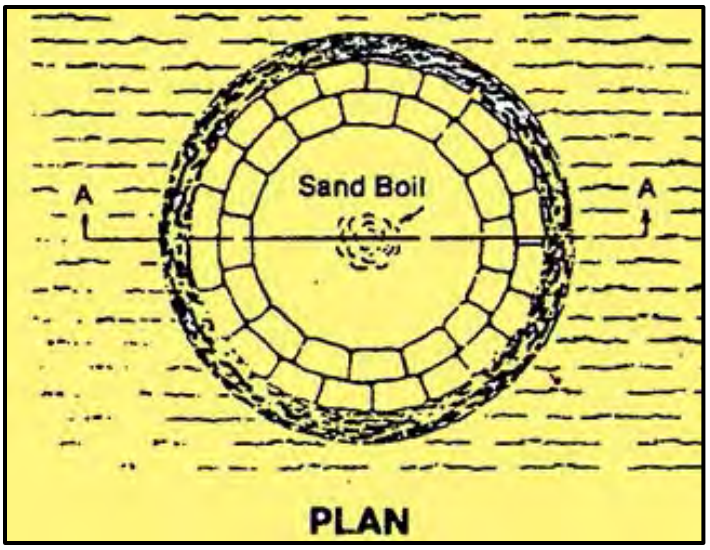

Ring the boil with sandbags, with the first bags back 1-2 feet from the boil. More, if the soil is unstable.

Build the first layer in a circle, 2-4 bags across, and then build up, bringing each layer in. If possible, keep the interior face straight.

Build the ring wall with the means for water to flow out, leaving a gap in the wall, or using pipes. Adjust the flows until the water slows, and becomes clear.

Monitor the ring wall constantly. Raise or lower the height of the wall as necessary, maintaining a slow, clear flow.

The height should be only enough to create enough head to slow flow so that no more material is displaced, and the water runs clear.

Notes:

Do not sack a boil which does not put out material.

The entire base should be cleared of debris and scarified.

Tie into the levee if the boil is near a toe.

Use loose earth between all of the sacks.

All joints must be staggered.

Be sure to clear the sand discharge.

Never attempt to completely stop the flow through a boil.

Corps of Engineers Sandbag Policy – Local governments, flood control districts, and other government agencies, are responsible for maintaining a supply of sandbags adequate to cover anticipated emergencies. The Walla Walla District maintains a limited sandbag stockpile to augment local jurisdictions during actual flood emergencies. The Corps will issue only to agencies or governments. Individual citizens requesting sandbags will be directed to their local government.

At the discretion of the District Commander, a portion of the District's stockpile may be loaned to meet a specific local flood emergency. Unused stocks must be returned to Walla Walla District as soon as the emergency is over. Consumed stocks must be replaced in kind, or paid for by the local interests, unless the District Commander has declared a flood emergency for that locality, in which case no reimbursement is necessary. This applies only to those jurisdictions within the Walla Walla District's area of operation, the Snake River basin.

To see if you are in our area of operations, or to request sandbags, contact the District Readiness Office, as noted below.

U.S. ARMY CORPS OF ENGINEERS – WALLA WALLA DISTRICT
READINESS OFFICE
201 North Third Avenue; Walla Walla, WA 99362-1876
509-527-7146 business hours
1-509-380-4538 emergencies (include 1-509- when calling)
cenww-eoc@usace.army.mil ¤ www.nww.usace.army.mil

November 2015

This document is not copyrighted and can be reproduced as needed.