1. Administrative Details

Proposal Name: South Perris Water Supply Desalination Modification

by Agency: Eastern Municipal Water District

Locations: CA

Date Submitted: 08/20/2018

Confirmation Number: f00f0b77-aa6c-4860-9b78-19d2b508e48c

Supporting Documents

File Name	Date Uploaded
Att 7 Desal Program Map.pdf	08/20/2018
Att 1 South Perris Desalination Program Board Letter O&M Committee 07172018.pdf	08/20/2018
Att 3a Volume-I-Perris-II-Desalter-Final.pdf	08/20/2018
Att 3b Volume-II-PerrisII-Desalter-Final-Preliminary-Drawings.pdf	08/20/2018
Att 4 perris-wells-draft-ea.pdf	08/20/2018
Att 5 Press Release 2018-07-09.pdf	08/20/2018
Att 6 USACE Summary 08-10-18.pdf	08/20/2018
Att 8 EN-44 Cost Estimate Final Design-v6-P2D Base.pdf	08/20/2018
Att 9 SupportLetters.pdf	08/20/2018
Att 1 South Perris Desalination Program Board Letter O&M Committee 07172018.pdf	08/20/2018
Att 2 2018-08-01 Board of Directors - Public Minutes-1295.pdf	08/20/2018

2. Provide the name of the primary sponsor and all non-Federal interests that have contributed or are expected to contribute toward the non-Federal share of the proposed feasibility study or modification.

Sponsor	**Letter of Support**
Eastern Municipal Water District(Primary)	EMWD is the primary sponsor to the modification. On August 1, 2018, the Eastern Municipal Water District (EMWD) Board of Directors voted to support and endorse the South Perris Water Supply Desalination Project Modification as will be submitted to the U.S. Army Corps of Engineers for project modification consideration under Section 7001 of WRRDA. See Attachment 2 for the Board minutes reporting the approval vote in support of continued cooperation with the USACE on the WRRDA funded project. Additional contribution toward the non-Federal share of the proposed feasibility study or modification will be made by the State Water Resources Control Board as part of the Water Quality Supply and Infrastructure Improvement Act of 2014, and by The Metropolitan Water District of Southern California in the form of Local Resource Program support.

3. State if this proposal is for a feasibility study, a modification to an authorized USACE feasibility study or a modification to an authorized USACE project. If it is a proposal for a modification, provide the authorized water resources development feasibility study or project name.

[x] Modification to an Authorized USACE Project : PL 106-554, Section 108, Environmental Infrastructure, (d) Additional Assistance, (52) South Perris California, $25,000,000 for water supply desalination infrastructure, South Perris California

4. Clearly articulate the specific project purpose(s) of the proposed study or modification. Demonstrate that the proposal is related to USACE mission and authorities and specifically address why additional or new authorization is needed.

EMWD submits this application to modify the previously authorized South Perris Water Supply Desalinatio n project from $25 million to $50 million. This modification will add a third desalter (the Perris II Desalter) to produce potable water from unusable groundwater using reverse osmosis in the Perris South and Perris N orth Subbasins. The facility will be built in one phase with a capacity of 5.4 million gallons per day (MGD). The increased funds will allow EMWD to continue to cut off migration and treat degraded groundwater from the Perris South Subbasin in the West San Jacinto Basin. The Desalter will operate with a state of the art, proven, and highly reliable reverse osmosis membrane system to filter the brackish water providing high qual ity potable water. EMWD provides water to approximately 785,000 people. 76 percent of potable demand is met with imported water from the State Water Project (SWP) and the Colorado River Aqueduct (CRA), an d the remainder met by local groundwater. Drought and possible catastrophic outages reduce reliability of i mported supplies. The 5.4 MGD of local potable water will assist in freeing up imported water to the benefit of Sacramento-San Joaquin River Delta (Delta) ecosystem restoration efforts and users of Colorado River wa ter. Additionally, brackish groundwater desalters are much more energy efficient and have a significantly s maller greenhouse gas footprint when compared to imported water. Attachments 3 and 4 include studies rela ted to the project. EMWD has successfully constructed and operated two groundwater desalination plants a nd implemented a desalination program within the last 8 years in this groundwater basin with assistance fro m the USACE. With EMWD's proven record, this third desalter will augment the region's capacity to build a more secure, drought-resilient water supply as they work to meet ever-increasing future demands. Attachm ents 5 and 6 include information related to collaboration with the USACE.

5. To the extent practicable, provide an estimate of the total cost, and the Federal and non-Federal share of those costs, of the proposed study and, separately, an estimate of the cost of construction or modification.

	Federal	**Non-Federal**	**Total**
Study	$0	$0	$0
Construction	$25,000,000	$8,330,000	$33,330,000

Explanation (if necessary)

EMWD is currently authorized for $25 million for the South Perris Water Supply Desalination project, and d esires to modify this by increasing the authorization by $25 million, for a total authorization of $50 million. Under the current authorization, the estimated federal cost is $25,000,000, and the estimated non-federal cost is $8,333,000, totaling $33,333,000 total project cost. To date, $16.8 million of the $25 million has been appr opriated to funding planning and design for wells and treatment facilities, and construction of four wells. See the uploaded USACE Collaboration and Support document that lists additional information on the current a uthorization status (Attachment 6). The Perris II Desalter capital cost is estimated at $59,776,100. This cost includes: $417,300 for preliminary design, $2,724,100 for final design, $2,343,600 for the bid_award phas e, $54,248,300 in construction costs, and $42,800 for administration. See uploaded summary budget for detail ed information (Attachment 8). EMWD has secured a $22.5 million grant from the California State Wat er Resources Control Board under their Proposition 1 Groundwater Grant Program for this project. EMWD has sufficient revenues available to cover capital costs, and operation and maintenance costs of the three des alters.

6. To the extent practicable, describe the anticipated monetary and nonmonetary benefits of the proposal including benefits to the protection of human life and property; improvement to transportation; the national economy; the environment; or the national security interests of the United States.

Increased Water Supply Reliability and Resiliency: The Desalter will increase supply reliability and resilienc y by providing a sustainable, drought-resistant local water supply at a reasonable cost. Reduced Relianc e on Imported Federal and State Water Supplies: Reducing EMWD's reliance on imported water will have m ultiple benefits. The Desalter will reduce the uncertainties regarding drought shortages, seismic events, envir onmental flow restrictions in the Delta, and salinity of Colorado River supplies. The Desalter will also reduce competing demands on the State Water Project and the Federal water supplies from the Colorado River, im prove flow conditions in the Delta and tributary rivers as less surface water is exported south, and reduce po wer consumption from pumping Delta exports. Benefits to Disadvantaged Communities (DACs): The D esalter is expected to provide up to 6,000 AFY of reliable water supply to EMWD's 1627 pressure zone, and i t is expected to benefit all of the population in that zone, including the approximately 39 percent DAC popul ation. Improved Groundwater Quality: Brackish water is acting as a predictive tracer for perchlorate and n itrate found in local aquifers. Perris South and Menifee groundwater management zones (GMZ) are fully affe cted by brackish water, but portions of Perris North and Lakeview_Hemet North GMZs are currently only p artly impacted. Bringing a third desalter online will inhibit migration of brackish groundwater to these basin s that serve as crucial drinking water sources. Regional Salinity Management: The Desalter will help E MWD manage salinity by reversing migration of high-TDS groundwater to low-TDS groundwater and export ing salt from the region. This project is expected to decrease TDS levels by 1,350 ppm and nitrogen levels by 3 mg_L (nitrate as N). The construction of the Desalter will contribute to EMWD's progress towards meetin g basin-wide salinity and nutrient water quality objectives to the benefit of all users.

7. Does local support exist? If 'Yes', describe the local support for the proposal.

[x] Yes

Local Support Description

Yes, local support exists. Included are letters of support from County of Riverside District Supervisor Mario n Ashley, City of Menifee Mayor Bill Zimmerman, and City of Perris Mayor Michael M. Vargas (Attachmen t 9). EMWD maintains excellent relationships with its congressional, state, and local legislative delegations. Elected officials and other stakeholders are well informed and support EMWD's efforts to increase water sup ply reliability and develop a more drought-proof water supply, both of which would be accomplished through the expansion of the South Perris Water Supply Desalination program. As a result of the ongoing drought, t here is increased local interest and awareness regarding the need for expanding the capacity of desalination p rograms. EMWD is forming a Stakeholder Advisory Group (SAG) to allow input from interested partie s. The SAG may include representatives of local and regional water related agencies and interested citizen gr oups. EMWD will hold one annual meeting of SAG at EMWD's offices, and provide information on operatio n of the Perris II Desalter. SAG members will receive electronic copies of Annual Report of West San Jacint o Groundwater Management Area. EMWD will also form a Technical Advisory Committee (TAC) to pro vide quality assurance and technical support for operation of Perris II Desalter. The TAC will consist of rep resentatives from the following: • Santa Ana Regional Water Quality Control Board • Division of Drinking Water (DDW) • Division of Financial Assistance • EMWD's Management and Technical Staff The TAC w ill meet on an annual basis in person or teleconference to review progress on brackish water remedial efforts a nd provide technical input on operation of Perris II Desalter. TAC members will receive electronic copies of Annual Report of West San Jacinto Groundwater Management Area.

8. Does the primary sponsor named in (2.) above have the financial ability to provide for the required cost share?

[x] Yes

Map Document

(This is as uploaded, a blank page will show if nothing was submitted)

Att 7 Desal Program Map.pdf

EASTERN MUNICIPAL WATER DISTRICT DESALINATION PROGRAM

Existing & Proposed Facilities

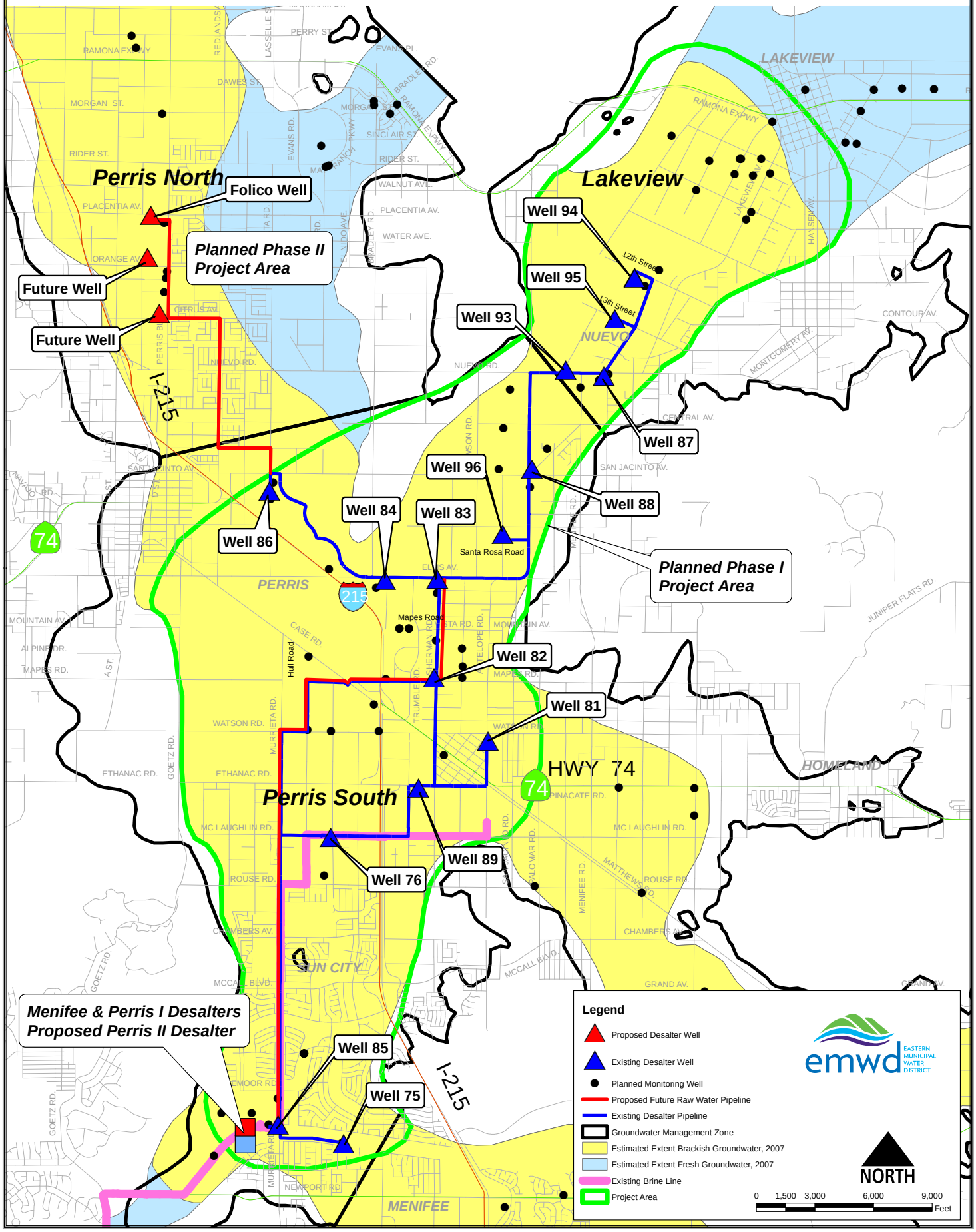

T:\Brackish_GW\CadGis\mxd\Existing_&_Conceptually_Proposed_Facilities_Fig_2_20180606.mxd

Additional Proposal Information

(This is as uploaded, a blank page will show if nothing was submitted)

Att 1 South Perris Desalination Program Board Letter O&M Committee 07172018.pdf

ACTION

Board Operations and Engineering Committee
July 17, 2018

SUBJECT:

Approve and Authorize Advancement of 5.4 MGD Perris II Desalter and Payment of Funds ($927,333) to the United States Army Corps of Engineers for the Construction of Well 94 Pipeline and Related Studies, and Additional Appropriation in the Amount of $927,333

BACKGROUND:

The South Perris Water Supply Desalination Program was authorized by Section 219 of the Water Resources Development Act in the amount of $25,000,000 for federal funding participation. Prior Federal appropriation for this Program has totaled approximately $14 Million.

Eastern Municipal Water District (EMWD) was recently notified by the United States Army Corps of Engineers (USACE) that $2,782,000 was appropriated as part of the Fiscal Year (FY) 2018 Federal Work Plan (Exhibit A) in support of the South Perris Water Supply Desalination Program Construction (Exhibit B).

Phase 1 of the Program will produce 6,000 acre-feet per year of potable water supplies from brackish groundwater. The Phase 1 Program components include the Perris II Desalter Treatment Facility, four brackish groundwater wells (Well Nos. 93, 94, 95, and 96), brine disposal, brackish water conveyance pipelines, treated water pipelines, and related facilities.

The USACE and EMWD have agreed to incrementally advance construction of Phase 1 Program components, which have included construction of brackish groundwater wells 95 and 96, drilling and equipping of brackish well 94, and related sections of brackish conveyance pipelines. The USACE FY 2018 appropriation is planned to be used for construction of the remaining well 94 transmission pipeline and related studies.

An amendment to the Project Partnership Agreement (PPA) incorporating the additional funding and scope modification is being prepared by USACE. Staff is requesting Board authorization to execute the PPA amendment and to transfer funds to the USACE in the amount of $927,333, which represents EMWD's required non-federal matching share (25 percent) associated with the FY 2018 Federal appropriation.

Also, staff has evaluated the accelerated expansion of the proposed Perris II Desalter Facility from 3.6 MGD to 5.4 MGD. The results indicate that water production from recently constructed wells provide sufficient supply to accommodate an expanded Desalter Facility. Benefits include maximizing the Local Resources Program funding with an additional $425,700

annual subsidy, design and construction savings resulting from economies of scale, and limited additional incremental cost to advance the expanded treatment facility.

FINANCIAL IMPACT:

This project will be financed from the General District Restricted Water System Expansion Fund subject to reimbursement from State Water Resources Control Board grant funding agreement ($22.5 Million).

STRATEGIC PLANNING GOAL/OBJECTIVE:

External Funding Opportunities: Aggressively pursue outside funding to reduce financial burden to the District's customers.

ENVIRONMENTAL IMPACT:

This project is subject to the California Environmental Quality Act (CEQA) and in conformance of California Code of Regulations Title 14, Chapter 3, Article 6, Section 15070, et seq., a Notice of Intent to adopt a Mitigated Negative Declaration was filed with the County of Riverside on December 4, 2013. Pursuant to State Guideline §15073, the IS/MND was made available for public review for a period of 30-days beginning December 4, 2013, and concluded January 6, 2014. The Mitigated Negative Declaration was adopted by the EMWD Board of Directors on February 19, 2014.

RECOMMENDATION:

Approve and authorize the following:

1. The General Manager, or his designee, to execute payment of funds to the United States Army Corps of Engineers for the South Perris Water Supply Desalination Program in an amount not to exceed $927,333, which represents required non-federal matching share (25 percent) associated with the USACE 2018 Work Plan;

2. The General Manager, or his designee, to execute an Amendment to the Project Partnership Agreement with the United States Army Corps of Engineers for the South Perris Water Supply Desalination Program;

3. Advancement of a 5.4 MGD Perris II Desalter Facility; and

4. An additional appropriation of $927,333.

SUBMITTED BY:

Paul D. Jones II P.E., General Manager 7/13/2018

Joe Mouawad, Assistant General Manager 7/12/2018

Attachment(s):
Exhibit A - FY2018 USACE Work Plan
Exhibit B - Location Map
Presentation

08/01/18 Board Meeting

Staff Contact: Greg Kowalski

ARMY CIVIL WORKS PROGRAM
FY 2018 WORK PLAN - CONSTRUCTION

STATE	DIVISION	BUSINESS PROGRAM	PROGRAM NAME	FY 2018 EXPLANATORY STATEMENT AMOUNT	ADDITIONAL WORK PLAN AMOUNT	TOTAL FY 2018 ALLOCATION	LINE ITEM OF ADDITIONAL FUNDING	FY 2018 BUDGETED AMOUNT JUSTIFICATION	FY 2018 ADDITIONAL FUNDING JUSTIFICATION
AZ	SPD	FDRR	RIO DE FLAG, FLAGSTAFF, AZ		$1,300,000	$1,300,000	1		Complete 100% design of project, including review of the ADot Route 66/B40 Bridge design.
AZ	SPD	FDRR	TUCSON DRAINAGE AREA, AZ		$1,100,000	$1,100,000	1		Continue design revisions and initiate new Environmental Assessment (EA) for design revisions.
CA	SPD	FDRR	AMERICAN RIVER COMMON FEATURES, NATOMAS BASIN,CA	$20,550,000	$10,450,000	$31,000,000	2	Complete construction Reach D; Reach 1 Contract 1 supervision and administration; Continue design Reach A&B; Complete Bidability, Constructability and Environmental (BCOE), prepare solicitation Reach 1 Contract 2 award; Real Estate Acquisitions Reaches A&B; Real Estate Acquisitions Reach E; Continue design Reach E; Award Construction Contract Reach H.	Fully fund Reach D construction, supervision and administration
CA	SPD	FDRR	AMERICAN RIVER WATERSHED (FOLSOM DAM MODIFICATIONS), CA		$26,000,000	$26,000,000	2		Complete Construction Control Structure and corresponding Environmental Compliance requirements; Recoating Hydraulic Cylinder Rods; Complete and fiscally close out project
CA	SPD	FDRR	AMERICAN RIVER WATERSHED (FOLSOM DAM RAISE), CA	$5,775,000		$5,775,000		Emergency gates contract award, engineering and design, supervision and administration; Design left wing dam, right wing dam, dikes 7&8, Mormom Island Auxiliary Dam MIAD; Construction dikes 4,5,6	
CA	SPD	EI	DESERT HOT SPRINGS, CA		$1,200,000	$1,200,000	8		Construction of wastewater collection system in Area D3
CA	SPD	ENR	HAMILTON AIRFIELD WETLANDS RESTORATION, CA		$1,445,000	$1,445,000	6		Adaptive management and monitoring
CA	SPD	ENR	HAMILTON CITY, CA	$8,325,000	$8,100,000	$16,425,000	7	Phase 2A Levee Contract supervision and administration prior award; Award Phase 2A Option including supervision and administration; Award Phase 1 Revegetation Plant Establishment 1st year; Award Phase 2B Orchard Removal Contract; Award Phase 1 Modifications/Requests for Equitable Adjustments	Complete Phase 2B Levee Construction; Tree Mitigation; Cost increases on budgeted work
CA	SPD	FDRR	ISABELLA LAKE, CA (DAM SAFETY)	$58,000,000		$58,000,000		Borel easement acquisition; Phase II Dams and Spillway Construction; Phase II engineering during construction, construction management; Vegetation mitigation	
CA	SPD	FDRR	KAWEAH RIVER, CA		$1,450,000	$1,450,000	1		Project Closeout

Attachment: Exhibit A - FY2018 USACE Work Plan (3422 : USACE FY 2018 Local Share)

ARMY CIVIL WORKS PROGRAM
FY 2018 WORK PLAN - CONSTRUCTION

CA	SPD	FDRR	MURRIETA CREEK, CA		$9,900,000	$9,900,000	1		Remove Vegetation and Sediment from Phase 1 project component and complete Phase 2A project component; Notify non-Federal sponsor of completion of Phases 1 and 2A for future Operation and Maintenance.
CA	SPD	FDRR	SACRAMENTO RIVER BANK PROTECTION PROJECT, CA	$150,000		$150,000		O&M Manual Updates and Notices of Completion	
CA	SPD	FDRC	SAN LORENZO RIVER, CA		$2,500,000	$2,500,000	1		Project Completion and Closeout
CA	SPD	FDRR	SAN LUIS REY RIVER, CA		$600,000	$600,000	1		Water quality monitoring; population monitoring for four Federally listed species; and non-native species removal
CA	SPD	FDRR	SANTA ANA RIVER MAINSTEM, CA	$40,000,000	$21,314,000	$98,000,000	2	Award Alcoa Dike contract; Construction Management, Supervision & Administration, Engineering & Design and complete mitigation efforts for the ongoing Reach 9 contracts and ongoing planning & design efforts for remaining construction features; Award Aux Dike Tie-In construction contract; Award environmental contracts & modifications for surveys of threaten/endangered species, restoration of temporary/permanent impact areas from construction and mitigation areas for Alcoa Dike, Reach 9 phase 4/5A/5B/BNSF; Award contract modifications of ongoing construction contracts for Reach 9 Phase 4/5A/5B/BNSF	Award small contracts such as aerial mapping, value engineering, surveys, GIS and CAD engineering support; Facility site maintenance and utility services; Fully fund Norco Bluff contract; Cost increases on budgeted work.
CA	SPD	FDRR	SANTA ANA RIVER MAINSTEM, CA		$36,686,000		1		
CA	SPD	EI	SOUTH PERRIS, CA		$2,782,000	$2,782,000	8		Brackish Water Well Siting analysis; Program Management for well construction; Sherman Road pipeline
CA	SPD	FDRR	STOCKTON METROPOLITIAN FLOOD CONTROL REIMBURSEMENT, CA		$10,249,000	$10,249,000	1		Reimburse Sponsor for locally constructed improvements performed and fiscally close out project
CA	SPD	FDRR	SUTTER BASIN, CA **1/**		$50,000,000	$50,000,000	2		**(New Start)** Complete Design and Award Construction Contract
CA	SPD	FDRR	YUBA RIVER BASIN, CA	$12,400,000		$12,400,000		Continue design Phases 2B, 3, 4B; Award Phase 2A South construction contract including Supervision and Administration; Award Phase 2C construction contract including Supervision and Administration	
FL	SAD	FDRC	BREVARD COUNTY MIDREACH, FL		$14,938,000	$28,375,000	3		Complete plans and specifications. Complete initial fill contract and construction management for midreach segment of Brevard County project.
FL	SAD	FDRC	BREVARD COUNTY MIDREACH, FL		$13,437,000		1		

ARMY CIVIL WORKS PROGRAM
FY 2018 WORK PLAN - CONSTRUCTION

FL	SAD	FDRR	CENTRAL AND SOUTHERN FLORIDA (UPPER ST JOHN LEVEE), FL		$4,000,000	$4,000,000	1		Complete and fiscally closeout Upper St. John Levee project
FL	SAD	EI	FLORIDA KEYS WATER QUALITY IMPROVEMENTS, FL		$4,000,000	$4,000,000	8		Reimbursement for municipalities work in Key Largo, Islamorada and Marathon
FL	SAD	FDRR	HERBERT HOOVER DIKE, FL (SEEPAGE CONTROL)	$82,000,000		$82,000,000		Continue design; Continue Engineering during Construction; Continue Construction Management; Continue Construction of culverts/modification; Continue Construction of Reach 1 cutoff wall/modification	
FL	SAD	NHD	JACKSONVILLE HARBOR DEEPENING, FL		$32,389,000	$32,389,000	4		Design ($420,000); S&A ($7.24 million); Dredging ($24.73 million)
FL	SAD	FDRC	SARASOTA, LIDO KEY, FL		$13,462,000	$13,462,000	3		**(New Start)** Plans and specifications and Initial nourishment of a 80 foot design berm over 1.56 miles of shoreline
FL	SAD	ENR	SOUTH FLORIDA ECOSYSTEM RESTORATION, FL	$76,500,000	$26,900,000	$105,426,730	7	Non-CERP: C-111 South Dade ($3.4M) Complete Physical Construction; C-51 West Palm Beach Canal ($200K): Fiscally close out project; CERP Picayune Strand ($5M): Complete Miller Pump Station to Operational Testing & Monitoring Plan Phase; Indian River Lagoon South ($48.7M) C-44 continue reservoir construction & oversight of pump station; Caloosahatchee C-43 WBSR ($1.5M) construction oversight; Loxahatchee River Watershed PIR ($514.6K) complete study; Lake Okeechobee Watershed PIR ($1.4M) continue study; Western Everglades Project ($2.4M) continue PIR; Central Everglades Planning Project (CEPP) ($1M) initiate LRR for PPA South; CERP: Design Adaptive Assessment and Monitoring, ($4M) & Interagency Modeling Center ($750K); Public outreach ($25K), Information/Data Management ($400K), RECOVER ($1.4M), program management ($3M); Kissimmee Complete construction & fiscally close out Reach 2, S-69 Weir, 2B1 embankment, Bronson/Sparks Levee contracts ($2.8M)	Lake Okeechobee Study Continue study ($1,380,000) ; Western Everglades Study Continue study ($712,000) ; Indian River Lagoon South continue construction on C-44 ($8,316,841) and initiate and complete PED for C-23/C-24 North Reservoir ($3,500,000); Kissimmee River repair damages to lower basin Reach 3 ($7,000,000) ; Broward County Water Preserve Area award contract for C-11 Mitigation Area A Berm ($3,017,886) ; Picayune Strand Remove road north of the Tie Back Levee ($5,000,000)
FL	SAD	ENR	SOUTH FLORIDA ECOSYSTEM RESTORATION, FL		$2,026,730		6		
GA	SAD	NHD	SAVANNAH HARBOR EXPANSION, GA	$50,060,000	$34,700,000	$84,760,000	4	Construct McCoys Cut Area Work ($22.56 million); Continue Entrance Channel Dredging ($21.5 million); Continue Environmental Monitoring ($4 million); Dissolved Oxygen Verification Testing ($2 million)	Continue Inner Harbor Dredging ($34.7 million)

Attachment: Exhibit A - FY2018 USACE Work Plan (3422 : USACE FY 2018 Local Share)

ARMY CIVIL WORKS PROGRAM
FY 2018 WORK PLAN - CONSTRUCTION

IA	NWD	ENR	MISSOURI RIVER FISH AND WILDLIFE RECOVERY, IA, KS, MO, MT, NE, ND & SD	$30,000,000		$30,000,000		Program Management Activities ($5 million); Integrated Science Program ($10 million); Missouri River Recovery Implementation Committee ($2 million); Yellowstone Intake ($3.644 million); Shallow Water Habitat ($5.806 million) and Emergent Sandbar Habitat ($3.55 million)	
ID	NWD	EI	RURAL NEVADA, MONTANA, IDAHO, NEW MEXICO, UTAH, AND WYOMING, NV, MT, ID, NM, UT & WY		$4,500,000	$4,500,000	8		Multiple Environmental Infrastructure projects in Idaho
IL	LRD	EI	COOK COUNTY INFRASTRUCTURE, IL		$1,200,000	$1,200,000	8		Glen Oak Acres-Glenview; Country Club Hills
IL	MVD	NIH	ILLINOIS WATERWAY, LAGRANGE LOCK & DAM (MAJOR REHABILITATION), IL		$5,000,000	$10,000,000	4		**(New Start)** Initiate construction of the major rehabilitation at LaGrange Lock
IL	MVD	NIH	ILLINOIS WATERWAY, LAGRANGE LOCK & DAM (MAJOR REHABILITATION), IL		$5,000,000		5		
IL	MVD	EI	MADISON AND ST. CLAIR COUNTIES, IL		$100,000	$100,000	8		Initiate/complete letter report for potential work in authorized areas
IL	LRD	FDRR	MCCOOK AND THORNTON RESERVOIRS, IL **1/**		$44,352,000	$44,352,000	1		Stage 1 Claims Settlement and Construction Completion; Initiate and Complete Stage 2
IL	LRD	NIH	OLMSTED LOCKS AND DAM, OHIO RIVER, IL & KY	$175,000,000		$175,000,000		Continue Dam Construction Contract ($110 million); Mussel Monitoring ($500,000); Planning, Engineering, and Design ($5 million); Construction Management ($8 million); Lock O&M during Construction (Hired Labor) ($4 million); River Dikes ($40 million); Operation Buildings ($7.5 million)	
IL	MVD	ENR	UPPER MISSISSIPPI RIVER RESTORATION, IL, IA, MN, MO & WI	$33,170,000		$33,170,000		Initiate, continue, and/or complete design, construction and or O&M manuals for multiple projects ($23.265 million); Monitoring ($4.245 million); Science in Support of Restoration/Management ($3.175 million); Habitat Evaluation/Monitoring ($975,000); Program management ($885,000); Regional project sequencing ($300,000); Adaptive Management ($150,000); Model Certification/Regional HREP ($100,000); Public Outreach ($75,000)	
IN	LRD	EI	CALUMET REGION, IN		$3,500,000	$3,500,000	8		Valparaiso Pumps; County Line Road Gary, IN; Wicker Meadows Cedar Lake, IN
IN	LRD	FDRC	INDIANA SHORELINE EROSION, IN		$2,500,000	$2,500,000	3		Sand Placement at Indiana Dunes National Lakeshore, Supervision and Administration
IN	LRD	FDRR	INDIANAPOLIS, WHITE RIVER (NORTH), IN		$3,172,000	$3,172,000	1		Complete remaining Contract Levee work and fiscally close out project

ARMY CIVIL WORKS PROGRAM
FY 2018 WORK PLAN - CONSTRUCTION

KY	LRD	NIH	KENTUCKY LOCK AND DAM, TENNESSEE RIVER, KY		$19,750,000	$39,500,000	4		Downstream Lock Excavation, including engineering and design and supervision and administration of on-going contracts ($39.5 million)
KY	LRD	NIH	KENTUCKY LOCK AND DAM, TENNESSEE RIVER, KY		$19,750,000		5		
KY	LRD	FDRR	ROUGH RIVER, KY (MAJOR REHAB)	$25,000,000		$25,000,000		Initiate cutoff wall contract; Engineering during Construction, Project Management, Construction Management	
KY	LRD	EI	SOUTHERN AND EASTERN KENTUCKY ENVIRONMENTAL INFRASTRUCTURE, KY (SECTION 531)		$3,000,000	$3,000,000	8		Environmental Infrastructure projects in several counties in KY
LA	MVD	EI	ASCENSION PARISH ENVIRONMENTAL INFRASTRUCTURE		$1,000,000	$1,000,000	8		Supervision and Administration Hillaryville Construction of Effluent Discharge System
LA	MVD	FDRR	COMITE RIVER, LA		$14,000,000	$14,000,000	1		Hwy 61 & Kansas City Railroad (KCRR) Bridge Construction Contract Phase 2 & 3
LA	MVD	EI	EAST BATON ROUGE PARISH ENVIRONMENTAL INFRASTRUCTURE, LA		$1,500,000	$1,500,000	8		Pump Station Construction
LA	MVD	EI	IBERIA PARISH, LA ENVIRONMENTAL INFRASTRUCTURE		$250,000	$250,000	8		Water and wastewater Infrastructure Master Plan
LA	MVD	EI	LIVINGSTON PARISH ENVIRONMENTAL INFRASTRUCTURE		$750,000	$750,000	8		Water and wastewater Infrastructure Master Plan
LA	MVD	NIL	RED RIVER WATERWAY MISSISSIPPI RIVER (J BENNETT JOHNSTON WATERWAY), LA		$900,000	$900,000	6		Design and construct Teague Trails Extension South Recreation Feature in Bossier Parish, LA
MA	NAD	NHD	BOSTON HARBOR DEEP DRAFT IMPROVEMENTS , MA	$58,000,000		$58,000,000		Continue dredging ($56.175 million); Construction management ($1.2 million); Planning, Engineering, and Design ($625,000)	
MD	NAD	ENR	POPLAR ISLAND, MD	$36,250,000	$30,975,000	$67,225,000	6	Original Work: Construction management, monitoring, and stakeholder coordination ($3.4 million); Inflow of dredged material and island cell development ($11.3 million) Expansion Work: Continue construction of lateral expansion ($21.55 million)	Initiate and complete construction of containment dikes and armor stone for the future upland area (259 acres) of the expansion ($30.975 million)
MI	LRD	EI	OAKLAND COUNTY, MI		$600,000	$600,000	8		Oakland County 219 Sewer Rehabilitation
MI	LRD	NHD	ST MARYS RIVER, SOO LOCKS (MAJOR REHABILITATION), MI		$57,580,000	$57,580,000	4		**(New Start)** Initiate and physically and fiscally complete construction of the major rehabilitation at Sault Ste. Marie Lock and Dam.
MN	LRD	EI	NORTHEASTERN MINNESOTA ENVIRONMENTAL INFRASTRUCTURE, MN		$2,442,000	$2,442,000	8		Program Coordination; Pease Water Infrastructure Improvement
MO	MVD	EI	ST. LOUIS, MO (COMBINED SEWER OVERFLOW)		$1,750,000	$1,750,000	8		Harlem-Baden Increment 1 of Phase 3
MO	MVD	FDRR	SWOPE PARK INDUSTRIAL AREA, KANSAS CITY, MO		$14,482,000	$14,482,000	2		Complete Construction and turn project over to Sponsor
MS	MVD	EI	DESOTO COUNTY WASTEWATER TREATMENT, MS		$3,627,000	$3,627,000	8		Short Fork Effluent Pump Station Clarifier

ARMY CIVIL WORKS PROGRAM
FY 2018 WORK PLAN - CONSTRUCTION

MS	MVD	EI	MISSISSIPPI ENVIRONMENTAL INFRASTRUCTURE, MS		$2,400,000	$2,400,000	8		Water Supply System Improvements Flowood; Sanitary System Improvements Starkville
MT	NWD	EI	RURAL NEVADA, MONTANA, IDAHO, NEW MEXICO, UTAH, AND WYOMING, NV, MT, ID, NM, UT & WY		$2,500,000	$2,500,000	8		Multiple Environmental Infrastructure projects in Montana
NC	SAD	NHD	WILMINGTON HARBOR, NC		$9,575,000	$9,575,000	4		Construct dike raises at Eagle Island Disposal Area ($7.075 million); Complete associated environmental mitigation ($2.5 million)
ND	MVD	FDRR	FARGO, ND - MOORHEAD, MN METRO		$35,000,000	$35,000,000	2		Complete Diversion Inlet Structure; Design Wild Rice Control Structure; Initiate and Complete Technical, Cultural and Environmental requirements Southern Embankment
ND	NWD	EI	NORTH DAKOTA ENVIRONMENTAL INFRASTRUCTURE, ND (SECTION 594)		$3,500,000	$3,500,000	8		Execute and complete Environmental Infrastructure project in Medina, North Dakota
NJ	NAD	NHD	DELAWARE RIVER MAIN CHANNEL, NJ, PA & DE		$14,000,000	$14,000,000	4		Dredging of Upper Reach B and Upper Reach E
NJ	NAD	FOTH	MOLLY ANN'S BROOK AT HALEDON, PROSPECT PARK AND PATERSON, NJ		$79,637	$79,637	1		Complete Fiscal Closeout
NJ	NAD	FDRR	RARITAN RIVER BASIN, GREEN BROOK SUB-BASIN, NJ	$20,000,000		$20,000,000		Award Element 1b, Segment C1, Contract 1; Award Nonstructural Flood Proofing Piscataway Township Structures; Engineering and Design, Construction Management	
NM	SPD	EI	CENTRAL NEW MEXICO, NM		$3,581,000	$3,581,000	8		Reimbursement Albuquerque West Levee, Black Mesa, South Valley, Rio Rancho Water Upgrade II, Bernalillo Arsenic Treatment Facility
NM	SPD	EI	RURAL NEVADA, MONTANA, IDAHO, NEW MEXICO, UTAH, AND WYOMING, NV, MT, ID, NM, UT & WY		$220,000	$220,000	8		Design and construction of water treatment system Miami, NM
NV	SPD	EI	RURAL NEVADA, MONTANA, IDAHO, NEW MEXICO, UTAH, AND WYOMING, NV, MT, ID, NM, UT & WY		$1,000,000	$1,000,000	8		Complete pipelines Searchlight project
NV	SPD	EI	TAHOE BASIN RESTORATION 108		$215,000	$215,000	8		Reimbursement Aquatic Invasive Species (AIS) Phase 2
NY	NAD	FDRC	FIRE ISLAND INLET TO MONTAUK POINT (WESTHAMPTON), NY		$15,000,000	$15,000,000	1		Funds will be used for S&A/E&D for nourishment contract to be awarded and to award contract to complete 4th nourishment effort.
NY	NAD	EI	NEW YORK CITY WATERSHED, NY		$500,000	$500,000	8		Environmental Infrastructure projects within the watershed
OH	LRD	FDRR	MOHAWK DAM, OH SEEPAGE CORRECTION MAJOR REHAB		$7,113,000	$7,113,000	2		Dam Safety PED and Initiate and Complete Construction Mohawk Dam
OH	LRD	EI	OHIO & NORTH DAKOTA ENVIRONMENTAL INFRASTRUCTURE, OH & ND (SECTION 594)		$7,000,000	$7,000,000	8		Execute and complete multiple Environmental Infrastructure projects in the State of Ohio
OH	LRD	FDRR	ZOAR LEVEE AT DOVER DAM, OH (SEEPAGE CORRECTION - REHABILITATION)		$10,216,000	$10,216,000	2		Dam Safety PED and Initiate and Complete Construction Zoar Levee, Dover Dam
OR	NWD	NHD	COLUMBIA RIVER AT THE MOUTH, OR & WA	$11,000,000		$11,000,000		Complete and close out North Jetty continuing contract	
PA	LRD	EI	ALLEGHENY COUNTY, PA		$1,008,000	$1,008,000	8		West View Water Authority Warrendale Bayne Road/Brush Creek Road

ARMY CIVIL WORKS PROGRAM
FY 2018 WORK PLAN - CONSTRUCTION

PA	LRD	FDRR	EAST BRANCH CLARION RIVER LAKE, PA	$50,100,000		$50,100,000		Continue cutoff wall contract, Engineering, Design and Construction, Supervision and Administration	
PA	LRD	NIL	LOCKS AND DAMS 2, 3 AND 4, MONONGAHELA RIVER, PA		$49,000,000	$98,000,000	4		Award Option 3 of 5 on River Chamber Contract ($34.8 million); Award Option 1 of 3 on the Dredging Contract to accommodate new pool ($20 million); River Chamber Contract: Option 3 - Shafts, coffer boxes and complete wall section M17-M21 ($17.4 million); Stilling Basin Contract ($14 million); Engineering and design and supervision and administration of on-going contracts ($9.8 million); Batch Plant NPDES Permit ($1 million); Re-acquisition of real estate easements set to expire December 31, 2019 ($1 million)
PA	LRD	NIL	LOCKS AND DAMS 2, 3 AND 4, MONONGAHELA RIVER, PA		$49,000,000		5		
PA	NAD	EI	NORTHEAST COUNTIES ENVIRONMENTAL INFRASTRUCTURE		$1,160,000	$1,160,000	8		Design and construction sanitary sewer in Moscow; Program Coordination
PA	LRD	FDRC	PRESQUE ISLE PENINSULA, PA (PERMANENT)		$1,500,000	$1,500,000	3		Erosion Control Contract, Engineering During Construction, Supervision and Administration
PA	LRD	EI	SOUTH CENTRAL PA ENVIRONMENTAL IMPROVEMENT PROGRAM, PA		$1,482,000	$1,482,000	8		City of Johnston Sewer Line; Blacklick Valley Wastewater System
SC	SAD	NHD	CHARLESTON HARBOR, DEEP DRAFT NAVIGATION IMPROVEMENT, SC		$49,000,000	$49,000,000	4		Dredging of new work material in the Lower Harbor in accordance with the Recommended Plan.
SC	SAD	EI	LAKES MARION AND MOULTRIE, SC		$4,945,000	$4,945,000	8		Construct Water Transmission Line Dorchester Reach; Extension Dorchester Reach; Design and Construction Providence and Orangeburg-Berkley Reaches; Construct Water Transmission Line Providence Reach
TN	LRD	FDRR	CENTER HILL LAKE, TN	$28,930,000		$28,930,000		Complete construction of the Saddle Dam Seepage Rehab as currently scoped; complete Supplemental Dam Safety Modification Study for Gate Operability; complete site restoration contracts; construction management	
TN	LRD	NIH	CHICKAMAUGA LOCK, TENNESSEE RIVER, TN		$38,250,000	$76,500,000	4		Award options on Lock Chamber Contract, including engineering and design and supervision and administration of on-going contracts.
TN	LRD	NIH	CHICKAMAUGA LOCK, TENNESSEE RIVER, TN		$38,250,000		5		
TX	SWD	FDRR	BRAYS BAYOU, HOUSTON, TX		$14,774,363	$14,774,363	1		Federal Oversight, Audits and Inspections; Reimburse non-Federal sponsor for the Federal share of completed project construction

Attachment: Exhibit A - FY2018 USACE Work Plan (3422 : USACE FY 2018 Local Share)

ARMY CIVIL WORKS PROGRAM
FY 2018 WORK PLAN - CONSTRUCTION

TX	SWD	FDRR	BUFFALO BAYOU AND TRIBUTARIES, TX	$16,500,000	$2,000,000	$18,500,000	1	Continue Construction of New Outlet Work Structure at Addicks and Barker Dams	Addicks & Barker Dams Request Equitable Adjustment
TX	SWD	NHD	CORPUS CHRISTI SHIP CHANNEL, TX (MAIN CHANNEL AND BARGE LANES)		$22,886,000	$22,886,000	4		Construction Entrance Channel (Contract 1) and partially fund the Federal share of Lower Bay part 1 of 2 (Contract 2)
TX	SPD	EI	EL PASO COUNTY, TX		$938,000	$938,000	8		Award and Complete Construction Strahan Road Water Transmission Main
TX	SWD	FDRC	GREENS BAYOU, TX		$4,125,000	$4,125,000	2		Complete and fiscally close out project
TX	SWD	ENR	SAN ANTONIO CHANNEL IMPROVEMENT PROJECT		$14,653,270	$14,653,270	6		Funds will be used to reimburse the non-Federal sponsor for funds advanced to complete project construction for the Mission Reach separable element.
UT	SPD	EI	RURAL NEVADA, MONTANA, IDAHO, NEW MEXICO, UTAH, AND WYOMING, NV, MT, ID, NM, UT & WY		$2,000,000	$2,000,000	8		Reimbursement Whiterocks UT
VA	LRD	EI	EASTERN SHORE AND SOUTHWEST VIRGINIA, VA		$200,000	$200,000	8		Complete design of wastewater infrastructure in Lee County VA
VA	LRD	FDRR	LEVISA AND TUG FORKS AND UPPER CUMBERLAND RIVER, VA, WV & KY		$5,400,000	$5,400,000	1		Update Mitigation Plan, Continue Design and Real Estate Town of Martin, KY
VA	NAD	ENR	LYNNHAVEN RIVER BASIN, VA		$10,000,000	$10,000,000	6		**(New Start)** Execute Project Partnership Agreement, Complete Plans and Specifications River Basin Package 1 and begin Construction
VA	NAD	NOTH	NORFOLK HARBOR AND CHANNELS, CRANEY ISLAND, VA		$5,000,000	$5,000,000	4		Design and Construction Management Dredge Main Dike footprint
VA	NAD	FDRC	VIRGINIA BEACH, VA (HURRICANE PROTECTION)		$17,600,000	$17,600,000	3		Dredging and Beach Renourishment
VT	NAD	EI	LAKE CHAMPLAIN WATERSHED INITIATE,VT		$500,000	$500,000	8		Continue analysis Waterbury Dam Spillway
WA	NWD	ENR	COLUMBIA RIVER FISH MITIGATION, WA, OR & ID	$70,000,000		$70,000,000		Address the highest priority actions to comply with the 2014 FCRPS Supplemental BiOp requirements, the NOAA Fisheries and USFWS 2008 Biopsy for Willamette River Basin 2008 Columbia Basin Fish Accords	
WA	NWD	ENR	MUD MOUNTAIN DAM, WA	$33,600,000	$10,000,000	$43,600,000	6	Complete Design, Real Estate acquisition, Initiate construction, Construction Management	Continue Construction Barrier Structure and Fish Passage Facility
WI	LRD	EI	NORTHERN WISCONSIN ENVIRONMENTAL ASSISTANCE, WI		$650,000	$650,000	8		Program Coordination, Red Cliff Reservation Inflow and Infiltration Remediation
WV	LRD	FDRR	BLUESTONE LAKE, WV	$4,425,000	$1,300,000	$5,725,000	2	Complete Phase 3 fiscal closeout, Continue Phase 4, Engineering and Design, Construction Management	Phase 5 Planning Engineering and Design (PED)
WV	LRD	EI	CENTRAL WEST VIRGINIA ENVIRONMENTAL INFRASTRUCTURE, WV (SECTION 571)		$2,000,000	$2,000,000	8		Construction for Environmental Infrastructure work in WV
WV	LRD	EI	SOUTHERN WEST VIRGINIA ENVIRONMENTAL INFRASTRUCTURE, WV (SECTION 340)		$2,000,000	$2,000,000	8		Construction for Environmental Infrastructure work in WV

ARMY CIVIL WORKS PROGRAM
FY 2018 WORK PLAN - CONSTRUCTION

XX	IWR	FDRR	DAM SAFETY & SEEPAGE/STABILITY CORRECTION PROGRAM (HQ MASTER AMSCO)	$34,300,000		$34,300,000		Conduct Issue Evaluation Studies ($22.3 million); Preconstruction engineering and design ($4 million); Dam Safety Modification Studies/Report ($8 million)	
XX	HQ	N/A	EMPLOYEE COMPENSATION FUND	$17,000,000		$17,000,000		Reimburse Department of Labor for Compensation of Employees for [on account of] injury or death of employees or persons under the agency's jurisdiction	
XX	IWR	NIH	INLAND WATERWAYS USERS BOARD - BOARD EXPENSE	$60,000		$60,000		Conduct Board Meeting s and Related Activities, Including Meeting and Committee Member Travel Costs	
XX	IWR	NIH	INLAND WATERWAYS USERS BOARD - CORPS EXPENSE	$275,000		$275,000		Perform analyses of project delivery, participate and coordinate ongoing Transportation Research Board efforts and support Users Board committee meetings and related activities	
XX	SPD	ENR	RESTORATION OF ABANDONED MINE SITES	$2,000,000		$2,000,000		Study and construct navigation improvement projects whose total cost does not exceed $10 million	
XX	ERDC	ENR	AQUATIC PLANT CONTROL PROGRAM	$11,000,000		$11,000,000		Develop biological controls, chemical technologies, environmental management strategies and evaluate herbicide efficacy	
XX	HQ	FDRR	EMERGENCY STREAMBANK AND SHORELINE PROTECTION (CAP - SEC 14)	$8,000,000		$8,000,000		Construct bank stabilization projects whose total federal cost does not exceed $5 million	
XX	HQ	FDRC	SHORE PROTECTION (CAP - SEC 103)	$3,000,000		$3,000,000		Construct projects whose total federal cost does not exceed $5 million to reduce flood damages from coastal storms	
XX	HQ	NHS/NHD	NAVIGATION PROGRAM (CAP - SEC 107)	$7,500,000		$7,500,000		Study and construct navigation improvement projects whose total cost does not exceed $10 million	
XX	HQ	NHS/NHD	MITIGATION OF SHORE DAMAGES (CAP - SEC 111)	$500,000		$500,000		Study and construct small projects whose cost does not exceed $10 million to mitigate the littoral impacts of navigation structures and operations	
XX	HQ	ENR	BENEFICIAL USES DREDGED MATERIAL (CAP - SEC 204)	$1,500,000		$1,500,000		Construct projects for the beneficial use of dredged material whose total cost does not exceed $10 million	
XX	HQ	FDRR	FLOOD CONTROL PROJECTS (CAP - SEC 205)	$8,000,000		$8,000,000		Construct projects for flood risk management whose total federal cost does not exceed $10 million	
XX	HQ	ENR	AQUATIC ECOSYSTEM RESTORATION (CAP - SEC 206)	$8,000,000		$8,000,000		Construct aquatic ecosystem restoration projects whose total cost does not exceed $10 million	
XX	HQ	ENR	PROJECT MODIFICATIONS FOR IMPROVEMENT OF THE ENVIRONMENT (CAP - SEC 1135)	$4,000,000		$4,000,000		Construct environmental modifications to operating Civil Works projects whose total cost does not exceed $10 million	

ARMY CIVIL WORKS PROGRAM
FY 2018 WORK PLAN - CONSTRUCTION

1/ Under the authority of Section 1043 of the Water Resources Reform and Development Act of 2014, the Corps will work with the non-Federal sponsor to consider entering into an agreement for the non-Federal sponsor to assume responsibility for carrying out construction of this project. Subject to the conditions of the agreement and to the extent allowable under current law, the amount provided here is intended to cover the remaining Federal share of this project's construction cost.

		KEY	DESCRIPTION OF ADDITIONAL FUNDING	ADDITIONAL FUNDING AMOUNT			FDRC	FLOOD DAMAGE REDUCTION COASTAL	
		1	FLOOD AND STORM DAMAGE REDUCTION	180,000,000			FDRR	FLOOD DAMAGE REDUCTION RIVERINE	
		2	FLOOD AND STORM DAMAGE REDUCTION (FLOOD CONTROL)	180,000,000			FOTH	FRM OTHER	
		3	FLOOD AND STORM DAMAGE REDUCTION (SHORE PROTECTION)	50,000,000			NHS	NAVIGATION HARBOR SHALLOW DRAFT (COASTAL)	
		4	NAVIGATION	337,130,000			NHD	NAVIGATION HARBOR DEEP DRAFT (COASTAL)	
		5	INLAND WATERWAYS TRUST FUND (IWTF)	112,000,000			NIH	INLAND NAVIGATION (HIGH USE)	
		6	OTHER AUTHORIZED PROJECT PURPOSES	70,000,000			NIL	INLAND NAVIGATION (LOW USE)	
		7	ENVIRONMENTAL RESTORATION OR COMPLIANCE	35,000,000			NOTH	NAV OTHER	
		8	ENVIRONMENTAL INFRASTRUCTURE	70,000,000			ENR	ECOSYSTEM RESTORATION	
							EI	ENVIRONMENTAL INFRASTRUCTURE	

Attachment: Exhibit A - FY2018 USACE Work Plan (3422 : USACE FY 2018 Local Share)

EASTERN MUNICIPAL WATER DISTRICT DESALINATION PROGRAM

Existing & Proposed Facilities

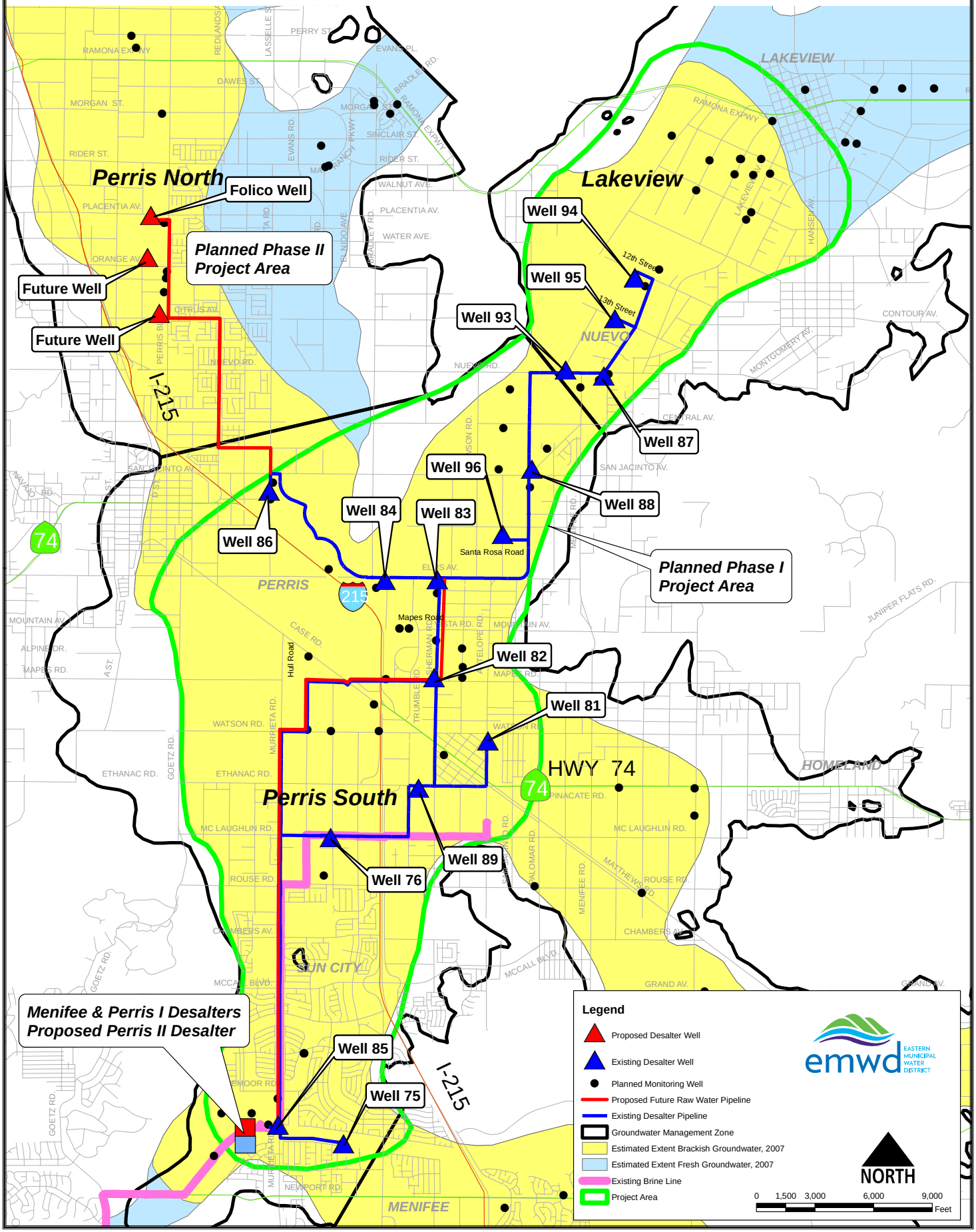

T:\Brackish_GW\CadGis\mxd\Existing_&_Conceptually_Proposed_Facilities_Fig_2_20180606.mxd

Attachment: Exhibit B - Location Map (3422 : USACE FY 2018 Local Share)

EASTERN MUNICIPAL WATER DISTRICT

Groundwater Desalination Program Update

Joe Mouawad, P.E.

July 17, 2018

Attachment: Presentation (3422 : USACE FY 2018 Local Share)

Agenda

- Desalination Program Overview
- Proposed Perris II Desalter Status
- Program Phasing and Accelerated Desalter Expansion
- Continued USACE Funding Support
- Next Steps

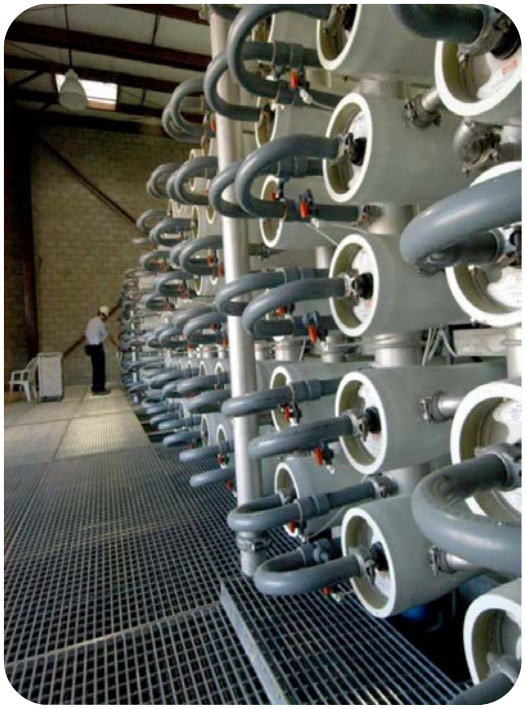

Attachment: Presentation (3422 : USACE FY 2018 Local Share)

Groundwater Desalination Program

EMWD Brackish Water Supply

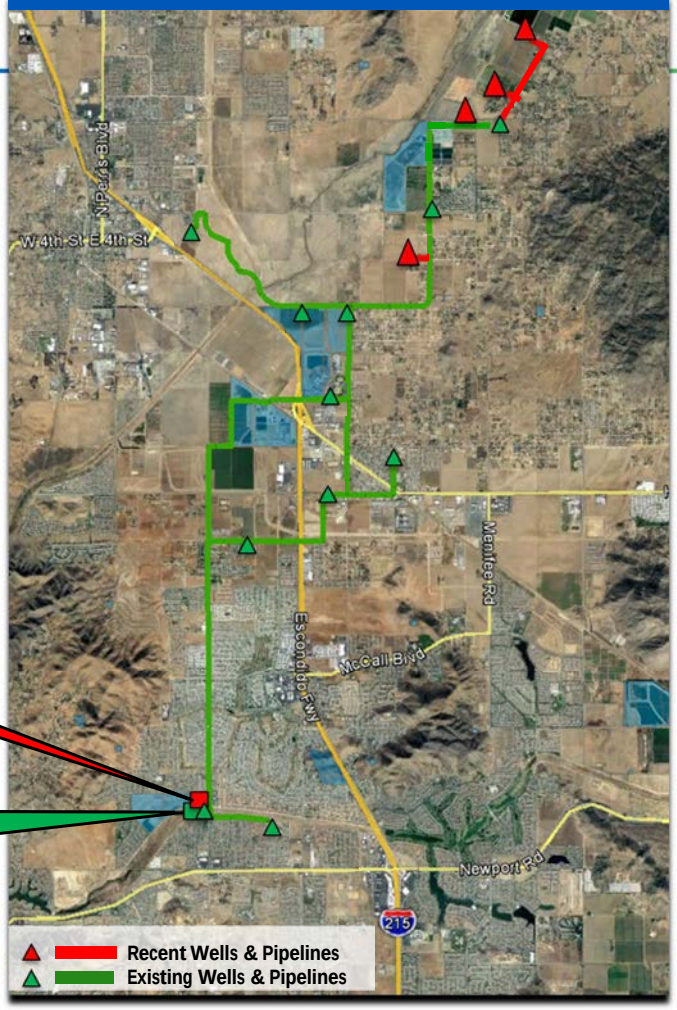

Proposed Perris II Desalter

Existing Menifee and Perris I Desalters

emwd

Attachment: Presentation (3422 : USACE FY 2018 Local Share)

Proposed Perris II Desalter Site

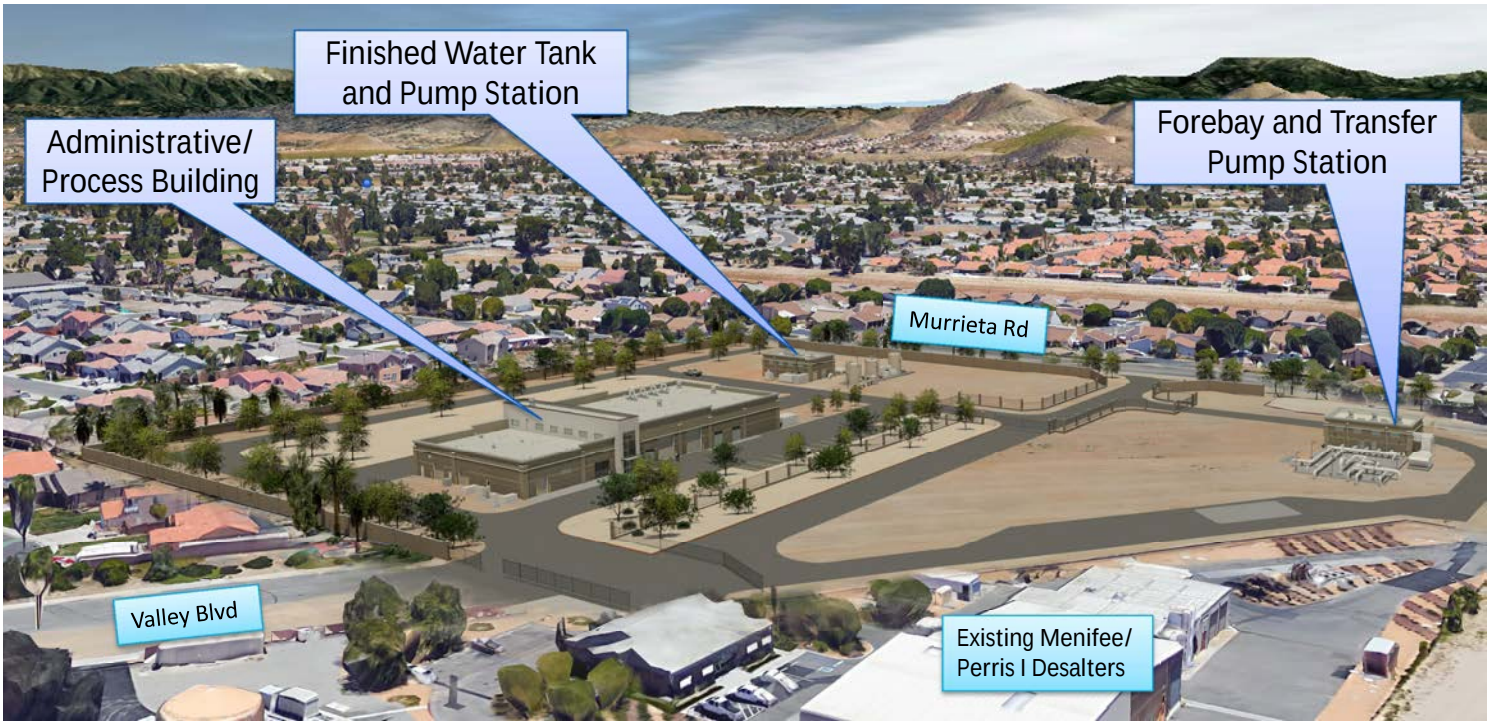

View of Facility from Valley Blvd- Looking Northeast

emwd

Attachment: Presentation (3422 : USACE FY 2018 Local Share)

Perris II Desalter Phasing

- 90% Design Completion Achieved
  - Expandable Design Concept
    - **Phase 1A Capacity @ 3.6 MGD (Current Implementation)**
    - **Phase 1B Production @ 5.4 MGD (Future Implementation- Estimated 5 yrs.)**

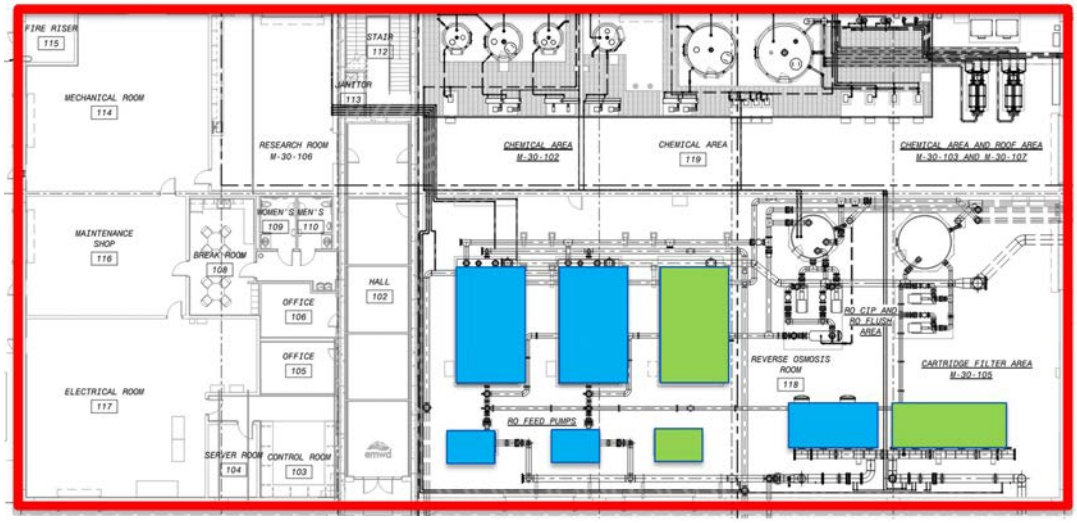

Admin/Process Building Plan

Attachment: Presentation (3422 : USACE FY 2018 Local Share)

Considerations for Accelerated Facility Expansion to 5.4 MGD

- Sufficient Water Supply
  - Wells 93, 95 and 96 producing more than anticipated
- Estimated incremental current cost for expanding Perris II Desalter from 3.6 to 5.4 MGD (1.8 MGD increase): $4.0 million
- Local Resources Program (LRP) Funding Agreement ($215/AF for 25 years for produced water)
  - 1.8 MGD incremental production equates to $2.1M over 5-years ($425,700 per year)
- Value Opportunities
  - Engineering/Design Economies - Savings of $150,000 to $300,000
  - Facility Construction Economies - Savings of $1.5 to $2.0M

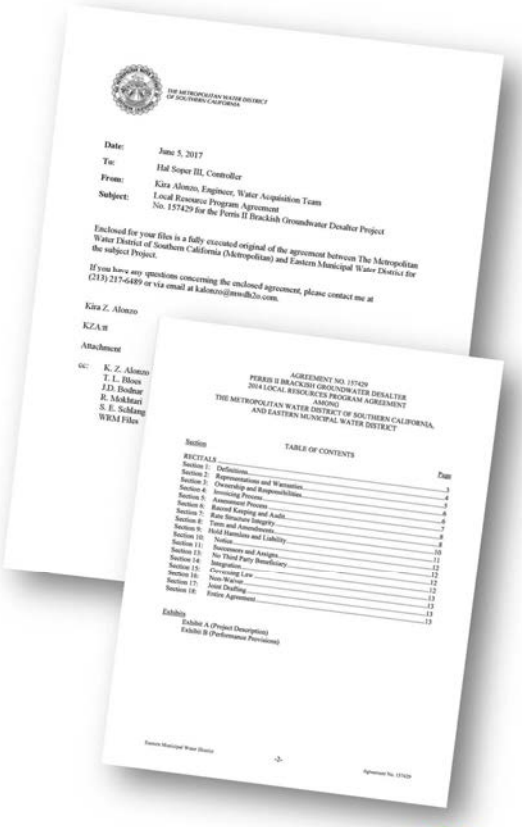

THE METROPOLITAN WATER DISTRICT OF SOUTHERN CALIFORNIA

Date: June 5, 2017
To: Hal Soper III, Controller
From: Kira Alonzo, Engineer, Water Acquisition Team
Subject: Local Resource Program Agreement No. 157429 for the Perris II Brackish Groundwater Desalter Project

Enclosed for your files is a fully executed original of the agreement between The Metropolitan Water District of Southern California (Metropolitan) and Eastern Municipal Water District for the subject Project.

If you have any questions concerning the enclosed agreement, please contact me at (213) 217-6489 or via email at kalonzo@mwdh2o.com.

Kira Z. Alonzo

KZA:tt

Attachment

cc: K. Z. Alonzo
T. L. Bloos
J.D. Bodner
R. Mokhtari
S. E. Schlang
WRM Files

AGREEMENT NO. 157429
PERRIS II BRACKISH GROUNDWATER DESALTER
2014 LOCAL RESOURCES PROGRAM AGREEMENT
AMONG
THE METROPOLITAN WATER DISTRICT OF SOUTHERN CALIFORNIA,
AND EASTERN MUNICIPAL WATER DISTRICT

TABLE OF CONTENTS

Section Page
RECITALS 1
Section 1: Definitions 2
Section 2: Representations and Warranties 3
Section 3: Ownership and Responsibilities 4
Section 4: Invoicing Process 4
Section 5: Assessment Process 5
Section 6: Record Keeping and Audit 6
Section 7: Rate Structure Integrity 6
Section 8: Term and Amendments 7
Section 9: Hold Harmless and Liability 8
Section 10: Notice 8
Section 11: Successors and Assigns 10
Section 12: No Third Party Beneficiary 11
Section 13: Integration 12
Section 14: Governing Law 12
Section 15: Non-Waiver 12
Section 16: Joint Drafting 12
Section 17: Entire Agreement 13
Section 18: 13
Exhibits 13
Exhibit A (Project Description)
Exhibit B (Performance Provisions)

Eastern Municipal Water District

Agreement No. 157429

emwd

Attachment: Presentation (3422 : USACE FY 2018 Local Share)

Desalination Program Schedule

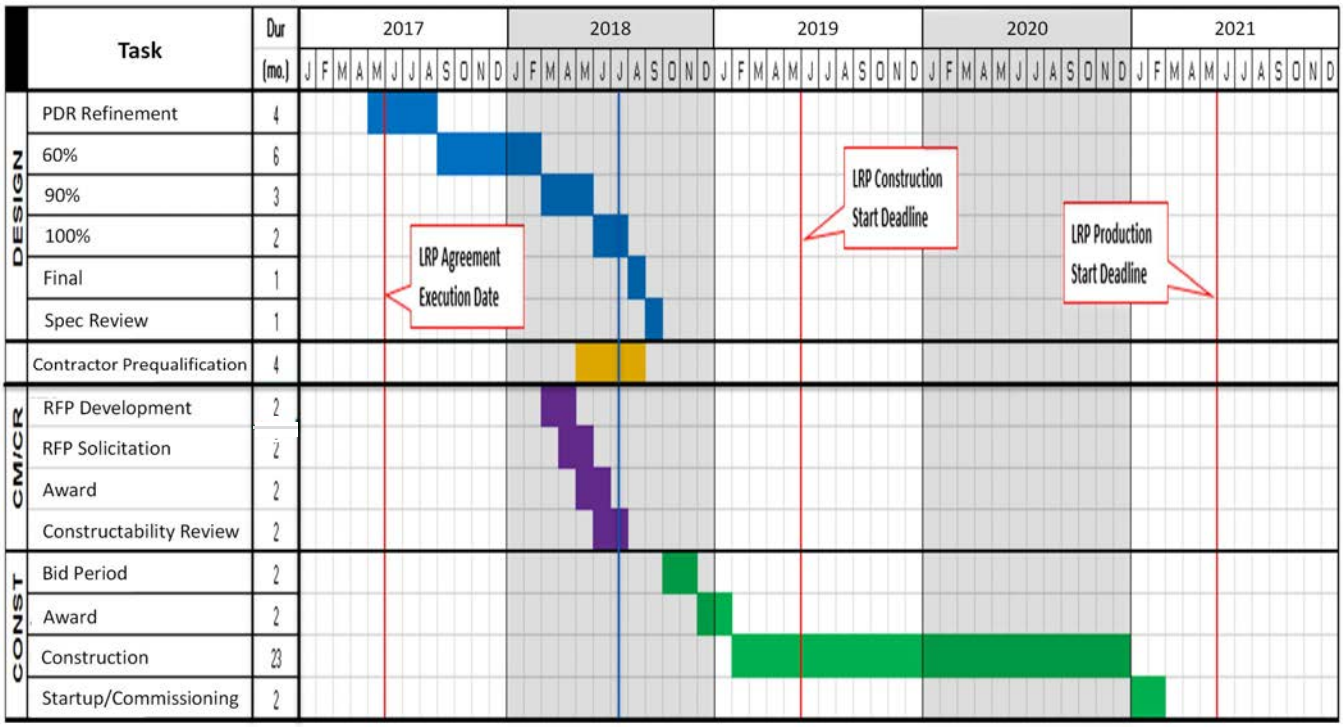

Attachment: Presentation (3422 : USACE FY 2018 Local Share)

USACE Collaboration and Support

- South Perris Water Supply Desalination Program
  - WRDA Section 219 Authorization $25M
- Previous Appropriations
  - FY13 (Planning and Design) $3.1M
  - FY14 and FY15 $6.1M
  - FY16 Appropriation $750K
  - FY17 Appropriation $4.0M
  - FY18 Appropriation $2.8M
  - Total Federal Appropriations: $16.8M
- Phase I Components
  - Perris II Desalter
  - 4 brackish water wells (93, 94, 95, 96)
  - Ancillary pipelines
- Incrementally advance project
  - Well 93 **completed**
  - Wells 95 and 96 **completed**
  - Well 94 **under construction**
  - Treatment facilities' **final design underway**

Well 96

Well 95 – Ribbon Cutting Ceremony with USACE Col. Kirk E. Gibbs

emwd

Attachment: Presentation (3422 : USACE FY 2018 Local Share)

USACE FY 2018 Approved Funding

- Funding:
  - USACE (75 percent) $2.782M
  - EMWD (25 percent) $0.927M
  - Total $3.71M
- Proposed project increments:
  - Support construction of Well 94 Pipeline
  - Confirm Long-term Sustainable Yield via Modeling
  - Advance Future Brackish Well Siting Study
  - Monitoring Wells and Site Acquisition
  - Transmission Pipelines

ü Change order to current USACE qualified and approved contractor **in process**

ü Project partnership agreement amendment **in process**

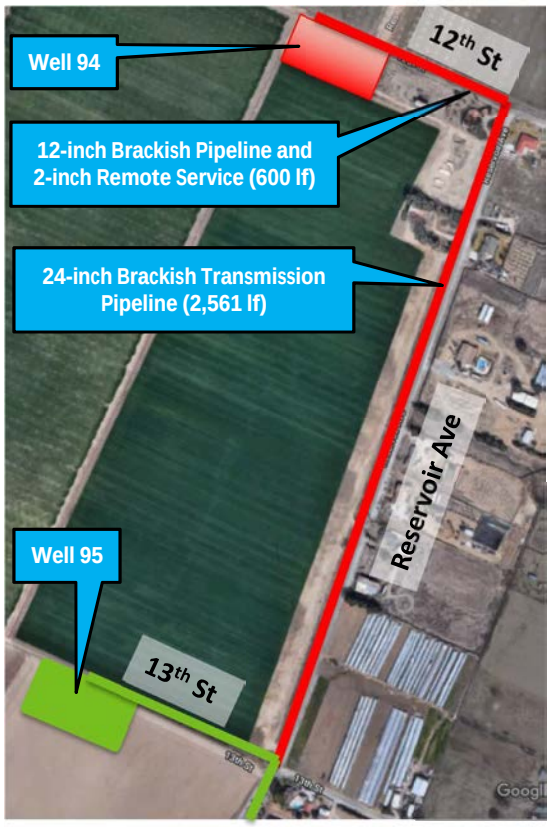

emwd

Attachment: Presentation (3422 : USACE FY 2018 Local Share)

Next Steps

USACE Coordination

- Complete Change Order for Well 94 Pipeline ($1.0M)
- Advance local match for FY18 Funds
- Discuss priority increments with USACE staff for remainder of funds ($2.8M)
  - Well Siting Study
  - Brackish Groundwater Sustainability Evaluation and Model
  - Monitoring Wells
  - Site Acquisition
- Complete PPA Agreement Amendment

Perris II Desalter

- Complete amendment for engineering/design of Phase 1B facility expansion
- Advance constructability review by third party Construction Management (CM) firm
- Complete final design efforts and construction contract document preparation
- Complete prequalification of Contractors
- Solicit bids for construction

Attachment: Presentation (3422 : USACE FY 2018 Local Share)

Recommendations

- Approve and authorize the General Manager, or his designee, to execute payment of funds to the United States Army Corps of Engineers for the South Perris Water Supply Desalination Program in an amount not to exceed $927,333, which represents required non-federal matching share (25 percent) associated with the USACE 2018 Work Plan;
- Approve and authorize the General Manager, or his designee, to execute an Amendment to the Project Partnership Agreement with the United States Army Corps of Engineers for the South Perris Water Supply Desalination Program;
- Approve and authorize advancement of a 5.4 MGD Perris II Desalter Facility; and
- Approve an additional appropriation of $927,333.

Attachment: Presentation (3422 : USACE FY 2018 Local Share)

Contact Information

Joe Mouawad, P.E.
Assistant General Manager
Planning, Engineering, Construction
(951) 928-3777 Ext. 4463

Email: mouawadj@emwd.org

Attachment: Presentation (3422 : USACE FY 2018 Local Share)

Additional Proposal Information

(This is as uploaded, a blank page will show if nothing was submitted)

Att 3a Volume_I_Perris_II_Desalter_Final.pdf

F I N A L R E P O R T

Preliminary Design Report
Perris II Desalination Facility
Volume I

Prepared for

Eastern Municipal Water District

October 2015

CH2M HILL, Inc.
6 Hutton Centre Drive Suite 700
Santa Ana, CA 92707
US
(714) 429-2000
(714) 429-2050

Contents

Section Page

Acronyms and Abbreviations ix

1. Introduction 1-1
1.1 Purpose and Background 1-1
1.2 Project Description 1-3
1.2.1 Treatment Processes 1-3
1.2.2 Site Layout and Non-process Facilities 1-5

2. Raw Water Supply Wells and Water Blending 2-1
2.1 Introduction 2-1
2.2 Raw Water Supply Wells 2-1
2.3 Well Water Quality and Well Blend Operational Scenarios 2-4
2.3.1 Well and Blend Water Qualities 2-4
2.3.2 Well Blend and Operational Scenarios 2-5
2.3.3 Well Blend and Operational Scenario Projections 2-6
2.4 Water Quality Goals 2-13
2.5 System Integration 2-14

3. Treatment Process Facility 3-1
3.1 Introduction 3-1
3.2 Pretreatment 3-2
3.2.1 Acid Addition 3-2
3.2.2 Threshold Inhibitor 3-3
3.2.3 Cartridge Filters 3-3
3.3 RO System 3-4
3.3.1 RO Feed Pumps 3-4
3.3.2 RO Trains 3-4
3.3.3 RO Membranes 3-6
3.3.4 Energy Recovery System 3-7
3.3.5 RO CIP and Neutralization Systems 3-9
3.3.6 RO Flush System 3-11
3.4 Post-Treatment 3-12
3.4.1 Decarbonation Systems 3-12
3.4.2 Sodium Hydroxide 3-14
3.4.3 Disinfection 3-14
3.4.4 Corrosion Control 3-15
3.4.5 Fluoridation 3-15

4. Chemical Storage and Feed Systems 4-1
4.1 Introduction 4-1
4.2 Chemical Feed Systems 4-1
4.2.1 Safety Design on Chemical Feed Systems 4-1
4.2.2 Onsite Sodium Hypochlorite Generation 4-2
4.2.3 Sodium Bisulfite 4-3
4.2.4 Threshold Inhibitor 4-4
4.2.5 Sulfuric Acid 4-4
4.2.6 Citric Acid 4-5

4.2.7 Sodium Hydroxide 4-6
4.2.8 Corrosion Inhibitor 4-7
4.2.9 Ammonium Sulfate 4-8
4.2.10 Hydrofluorosilicic Acid (Fluoride) 4-9

5. Clearwell and Finished Water Pump Station 5-1
5.1 Introduction 5-1
5.2 Clearwell and CT Requirements 5-1
5.2.1 CT Calculation 5-2
5.2.2 Chloramination 5-2
5.3 Finished Water Pump Station 5-3

6. Concentrate Pump Station and Concentrate Disposal 6-1
6.1 Introduction 6-1
6.2 Existing Brine Pump Station Modifications 6-1

7. Civil and Site Layout 7-1
7.1 Introduction 7-1
7.2 Project Site 7-2
7.3 Topographic Mapping/Surveying 7-2
7.4 Federal Emergency Management Agency Flood Zone 7-3
7.5 Site Layout Design Criteria 7-3
7.6 Brine Discharge Station 7-4
7.7 Roadways/Access 7-4
7.8 Site Security and Fencing 7-5
7.9 Grading and Drainage 7-5
7.10 Erosion Control 7-5
7.10.1 Fire Protection Requirements 7-6
7.10.2 Sewer Force Main 7-6
7.11 Landscaping 7-6

8. Architectural, Structural, and Building Mechanical Systems and Design Criteria 8-1
8.1 Architectural Design Criteria 8-1
8.1.1 Codes and Standards 8-1
8.1.2 Building Code Analysis 8-1
8.2 Structural Codes, Systems, and Materials 8-2
8.2.1 Structural Design Criteria 8-2
8.2.2 Foundation Criteria 8-3
8.2.3 Materials 8-3
8.2.4 Guidelines 8-4
8.2.5 Water-Holding Structures 8-4
8.2.6 Non-Water-Holding Structures 8-4
8.2.7 Deliverables 8-5
8.3 HVAC Systems 8-5
8.3.1 Design Criteria 8-5
8.3.2 Codes 8-5
8.3.3 Outdoor Design Conditions 8-5
8.3.4 Indoor Design Conditions 8-6
8.3.5 Building Pressurization 8-6
8.3.6 Ductwork 8-6
8.3.7 RO and Chemical Storage/Feed Building Systems 8-6
8.3.8 HVAC System Controls 8-7

8.4 Plumbing Systems 8-7
8.4.1 General Scope 8-7
8.4.2 Design Criteria 8-7
8.4.3 Building Plumbing Systems 8-7
8.5 Fire Protection 8-8
8.5.1 General Scope 8-8

9. Architectural Building Concepts and Miscellaneous Structures 9-1
9.1 Introduction 9-1
9.2 Exterior Architectural Theme 9-1
9.2.1 Selection Process 9-1
9.3 Buildings 9-1
9.3.1 Reverse Osmosis Building 9-1
9.3.2 Finished Water Pump Station 9-3
9.4 Accessibility 9-3
9.5 Public Tours 9-3
9.6 Sanitary Requirements (Plumbing Fixtures) 9-3
9.7 Exterior Building Components and Treatment 9-3

10. Instrumental and Control System 10-1
10.1 Introduction 10-1
10.1.1 Assumptions 10-1
10.1.2 Open Items 10-1
10.2 SCADA System 10-1
10.2.1 System Servers 10-1
10.2.2 Human-Machine Interface 10-1
10.2.3 Programmable Logic Controller Network 10-2
10.2.4 SCADA System Communications 10-2
10.2.5 TELCO Communications 10-3
10.2.6 SCADA System Power 10-3
10.3 Equipment/Instrumentation Tagging Convention 10-3
10.3.1 General 10-3
10.3.2 Unit Processes 10-3
10.3.3 Instrumentation 10-4
10.3.4 Equipment 10-4
10.3.5 Panels 10-4
10.4 General Monitoring Requirements 10-4
10.5 General Control Modes 10-5
10.6 Overall Control: Local vs. Remote 10-5
10.7 Plant Control Strategies 10-5
10.7.1 Starting Production 10-5
10.7.2 Raw Water System Pressure 10-6
10.7.3 Starting RO Production 10-6
10.7.4 Membrane Feed Bypass or “Blend Control” 10-6
10.7.5 Raw Water pH Control 10-6
10.7.6 Pretreatment TI Feed Control 10-7
10.7.7 Cartridge Filter Differential Pressure 10-7
10.7.8 Membrane Feed to Waste Control 10-7
10.7.9 RO Feed Pumps 10-7
10.7.10 Interstage Turbocharger -32150 and Auxiliary Nozzle Valve (ANV-32151) - 10-8
10.7.11 Membrane Permeate/Concentrate Flows and Recovery Control System 10-8

10.7.12 Permeate to Waste Controls (Off-Spec Permeate) 10-9
10.7.13 Decarbonator Bypass 10-9
10.7.14 Post-Treatment Corrosion Inhibitor Feed Control 10-9
10.7.15 Clearwell/Finish Water Off-Spec Water 10-9
10.7.16 Post-Disinfection Sodium Hypochlorite Feed Control 10-9
10.7.17 Post-Treatment Ammonium Sulfate Feed Control 10-10
10.7.18 Post-Treatment Fluoride Feed Control 10-10
10.7.19 Final Metering 10-10
10.7.20 Membrane Cleaning System 10-10
10.7.21 Membrane Flushing 10-11
10.7.22 Permeate Transfer Between Permeate and CIP Tanks 10-12
10.7.23 Finished Water Pump Station 10-13
10.7.24 Concentrate Pump Station 10-14
10.8 Chemical Systems for Desalination Facility 10-14
10.8.1 Sodium Hypochlorite System 10-14
10.8.2 Sulfuric Acid Storage, Transfer and Metering System (future addition) 10-15
10.8.3 Ammonium Sulfate Storage and Feed System 10-15
10.8.4 Sodium Hydroxide Storage Transfer and Metering System 10-16
10.8.5 TI Storage and Metering System 10-16
10.8.6 Corrosion Inhibitor Storage and Metering System 10-17
10.8.7 Hydrofluorosilicic Acid Storage, Day Tank, and Metering System (future addition) 10-17
10.8.8 Citric Acid Storage and Transfer System 10-18
10.8.9 Process Drain System 10-18

11. Electrical System 11-1
11.1 Introduction 11-1
11.1.1 Assumptions 11-1
11.1.2 SCE Coordination 11-2
11.1.3 Electrical Analysis 11-2
11.2 Electrical Codes and Standards 11-3
11.2.1 Codes 11-3
11.2.2 Standards 11-3
11.2.3 Design Guides 11-3
11.2.4 Regulations 11-3
11.3 Utility Power Service 11-3
11.3.1 Alternative Approach 11-4
11.4 Power Distribution Criteria 11-4
11.4.1 Protective Devices 11-5
11.4.2 Ground Fault Protection 11-6
11.4.3 Available Short-Circuit Ratings 11-6
11.4.4 Harmonic Distortion 11-6
11.4.5 Equipment Construction 11-7
11.5 Motor Control Criteria 11-7
11.5.1 Adjustable-Speed Motor Applications 11-7
11.5.2 Constant-Speed Motor Applications 11-7
11.5.3 Control and Monitoring 11-8
11.6 Standby Power Distribution Criteria 11-8
11.7 UPS System Criteria 11-9
11.8 General Lighting, Fire/Life Safety Design Criteria 11-9
11.8.1 Fire Detection and Notification 11-9

11.8.2 Exterior Lighting 11-10
11.8.3 Interior Lighting 11-10
11.9 Lightning Protection Design Criteria 11-10
11.10 Electrical Material and Methods Design Criteria 11-10
11.10.1 Raceway Systems 11-11
11.10.2 Wire and Cable 11-12
11.10.3 Fiber-Optic 11-12
11.11 Communication Criteria 11-13
11.12 Submetering 11-13
11.13 Security System 11-13
11.14 Grounding Criteria 11-13

12. Preliminary Opinion of Probable Construction Costs 12-1

Appendixes

Appendix A Northern and Southern Well Capacity and Well and Blend Water Quality Data
Appendix B RO Projections
Appendix C Northern and Southern Well Blends and Mass Balance Tables
Appendix D Well and Blend Water Quality Projections Used in 2008 PDR
Appendix E Topographic Site Map and FEMA Flood Insurance Rate Map
Appendix F RO Building Code Analysis
Appendix G Finished Water Pump Station Building Code Analysis
Appendix H PDF II Elevations Studies A, B, C, and D
Appendix I PDF II Color Studies
Appendix J PDF II Section Studies A, B, and C
Appendix K PDF II Colorized Elevation
Appendix L PDF II Preliminary Opinion of Probable Construction Cost

Tables

Table 1-1 PDF II Relocation Synergies and Cost Benefits
Table 2-1 PDF II Raw Water Supply
Table 2-2 Southern and Northern Well Blends and Water Quality
Table 2-3 Well Blend and Operational Scenarios
Table 2-4 AquaSel Product Water Quality (Based on 05/04/2015 Sampling Results)
Table 3-1 PDF II Desalination Preliminary Process Flow
Table 3-2 Preliminary Process Design Criteria for the RO Feedwater Pretreatment System
Table 3-3 Preliminary Process Design Criteria for RO Feed Pumps
Table 3-4 Preliminary Process Design Criteria for RO 2-Stage Process Trains
Table 3-5 Summary of Performance Results for Recommended RO Membrane Elements
Table 3-6 Preliminary Process Design Criteria for RO CIP System
Table 3-7 Preliminary Process Design Criteria for CIP Waste Neutralization System
Table 3-8 Preliminary Process Design Criteria for RO Flush System
Table 3-9 Preliminary Process Design Criteria for Decarbonator System (RO Permeate)
Table 3-10 Preliminary Process Design Criteria for Decarbonator System (Fe/Mn Treated Effluent)
Table 4-1 List of Chemicals and their Application at PDF II
Table 4-2 Sodium Hypochlorite System Design Criteria
Table 4-3 Threshold Inhibitor System Design Criteria
Table 4-4 Sulfuric Acid System Design Criteria

Table 4-5 Citric Acid System Design Criteria
Table 4-6 Sodium Hydroxide System Design Criteria
Table 4-7 Corrosion Inhibitor System Design Criteria
Table 4-8 Ammonium Sulfate System Design Criteria
Table 4-9 Hydrofluorosilicic Acid (Fluoride) System Design Criteria
Table 5-1 Clearwell System Design Criteria
Table 5-2 Clearwell CT Calculations
Table 5-3 Finished Water Pump Station Design Criteria
Table 6-1 Brine Pump Station Modifications Design Criteria
Table 8-1 Indoor Design Conditions
Table 11-1 Load Summary
Table 11-2 Electrical System Nominal Voltages
Table 11-3 Electrical System Utilization Voltages
Table 11-4 Adjustable Speed and Constant Speed Applications
Table 11-5 Electrical Equipment Material Selection
Table 11-6 Electrical Equipment and Material De-Rating
Table 12-1. Perris II Desalter at Menifee Site Preliminary Opinion of Probable Construction Costs

Figures

Figure 1-1 Proposed New Location for PDF II
Figure 2-1 EMWD Desalination Wells and Transmission Pipes
Figure 2-2 Scenario 1 Process Schematic
Figure 2-3 Scenario 2 Process Schematic
Figure 2-4 Scenario 3 Process Schematic
Figure 2-5 Scenario 4 Process Schematic
Figure 2-6 Scenario 5 Process Schematic
Figure 2-7 Scenario 6 Process Schematic
Figure 3-1 Schematic of PDFII
Figure 3-2 Process Flow Diagram for the RO System including Turbocharger
Figure 7-1 PDF II Site Layout

Acronyms and Abbreviations

°C	degrees Celsius
°F	degrees Fahrenheit
µg/L	micrograms per liter
AC	alternating current
ACI	American Concrete Institute
AFD	Adjustable Frequency Drive
AI	Aggressive Index
AIC	available inrush current
ANSI	American National Standards Institute
ASTM	American Society for Testing and Materials
AWG	American Wire Gauge
BFE	base flood elevation
$CaCO_3$	calcium carbonate
CCS	central computer system
CCT	chlorine contact tank
CIP	clean-in-place
CMU	concrete masonry unit
CO_2	carbon dioxide
CT	chlorine residual x contact time
EMWD	Eastern Municipal Water District
ESR	electrical service requirement
FACP	fire alarm control panel
Fe/Mn	iron and manganese
FEMA	Federal Emergency Management Agency
FIRM	Flood Insurance Rate Map
FRP	fiberglass reinforced plastic
FVNR	full-voltage nonreversing
gfd	gallons per day per square foot
gpm	gallons per minute
gph	gallons per hour
HMI	human-machine interface
HTC	hydraulic turbocharger
HVAC	heating, ventilation, and air conditioning

I/O	input/output
IPR	indirect potable reuse
ISA	Instrument Society of America
kips	thousands of pounds per square inch
kV	kilovolt(s)
kVA	kilovolt-ampere(s)
lb/day	pounds per day
LCP	local control panel
LODR	Letter of Determination Review
LSI	Langelier Saturation Index
MCC	motor control center
mg/L	milligrams per liter
mg/min-L	milligrams per minute per liter
mgd	million gallons per day
NaOCl	sodium hypochlorite
NaOH	sodium hydroxide
NEC	National Electric Code
NEMA	National Electrical Manufacturers Association
NFPA	National Fire Protection Association
NSF	National Sanitation Foundation
O&M	operation and maintenance
OD	outside diameter
off-spec	off-specification
OPCC	Opinion of Probable Construction Costs
P&ID	process and instrumentation diagram
pcf	pounds per cubic foot
PDF II	Perris II Desalination Facility
PDR	Preliminary Design Report
PID	proportional-integral-derivative
PLC	programmable logic controller
PO_4^{3-}	phosphate ion
psf	pounds per square foot
psi	pounds per square inch
PVC	polyvinyl chloride
PVRWRF	Perris Valley Regional Water Reclamation Facility

RAS	remote access service
RGA	rigid galvanized aluminum
RO	reverse osmosis
RVSS	reduced-voltage solid-state
SCADA	supervisory control and data acquisition
SCE	Southern California Edison
SES	service entrance switchboard
SSFR	second-stage flux ratio
SST	stainless steel
TDH	total dynamic head
TDS	total dissolved solids
TEFC	totally enclosed, fan-cooled
TI	threshold inhibitor
TVSS	transient voltage surge suppressor
UPS	uninterruptible power supply
EPA	United States Environmental Protection Agency
V	volt(s)
VOIP	Voice over Internet Protocol

SECTION 1

Introduction

1.1 Purpose and Background

The Perris II Desalter Facility (PDF II) was designed to be located at the northeastern corner of Watson Road and Hull Road in Perris, California, on Eastern Municipal Water District (EMWD)-owned property adjacent to the Perris Valley Water Reclamation Facility (PVRWRF) site. This design was completed in 2010 and updated in 2012 by adding the clean-in-place (CIP) neutralization facilities. Recently, EMWD acquired the property adjacent to the Perris I and Menifee Desalters at the eastern end of Valley Boulevard at Murrieta Road in Menifee as shown in Figure 1-1. This location is referred to as the Menifee site.

Figure 1-1 Proposed New Location for PDF II

EMWD has decided to relocate PDF II from the PVRWRF site to the Menifee site. Locating the three desalters in the same vicinity (adjacent to each other) provides a number of synergies and advantages to EMWD, which were described in the 2015 Perris II Desalter Relocation Feasibility Technical Memorandum by CH2M HILL Engineers, Inc. (CH2M). The areas where synergies can result in cost savings to EMWD include:

- Site civil/site grading - Unlike the PVRWRF site, the Menifee site is not located in a flood zone and access can be directly from one of the main roads (Valley Blvd) instead of through the PVRWRF.
- Electrical power supply - At the Menifee site, there is no need to modify the power supply from Southern California Edison to 33-kilovolts (kV), as required at the PVRWRF site.
- Holding/Percolation Pond - At the Menifee site, one of the Sun City ponds or several shared ponds can be used to dispose of off-specification/flush water, instead of building a new one.

- Reverse Osmosis (RO) Building - At the new location, the office, administration, and operation room spaces of the main building can be eliminated from the design and Perris I and Menifee RO Building can be utilized for these functions.
- Operations and Management (O&M) synergies - At the Menifee site, an increase in personnel by 1.5 full-time equivalent will be needed compared to 3 full-time equivalent personnel required for the PVRWRF site.
- Brine Pump Station - At the Menifee site, the existing pumps in the Brine Pump Station can be replaced with larger pumps to pump brine from all three desalters instead of building the new pump station required for the PVRWRF site.
- Finished Water and Brine Pipelines - At the Menifee site there is no need to construct new brine or finished water pipelines because the existing brine pipeline and the existing finished water pipes in the vicinity of the Menifee site have sufficient capacity.

Table 1-1 presents the identified synergies and cost benefits due to the relocation of PDF II.

Table 1-1 PDF II Relocation Synergies and Cost Benefits

Item	Cost ($)
Capital Cost	
Site civil/Site Grading (raising PVRWRF site by 5 ft. and paved access road)	-993,000
Electrical Power Supply	-275,000
Percolation Pond	-891,000
Using Metal Prefabricated Building Instead of concrete masonry unit (CMU)	-733,000
Building Cost Reduction Due to Elimination of Admin Offices and a Restroom	-1,059,000
Elimination of New Communication Tower and HMI Hardware/Software Savings	-80,000
Finished and Brine Water Transmission Pipes	-5,230,000
Brine Pump Station	-828,000
Raw Water Transmission	4,057,000
Total Capital Cost – Desalter, Brine Line and Finished Water Pipeline	-$6,032,000
O&M Cost	
Maintenance	-121,000/year
Labor	-160,000/year
Total O&M Cost Saving	-281,000/year
20-Year LCC O&M Saving	-$3,667,000
Total 20-year LCC Saving Desalter, Brine Line and Finished Water Pipeline	-$9,699,000

To take advantage of these synergies by relocating PDF II to the Menifee site, the existing PDF II design for the PVRWRF site needs to be modified/redesigned for the Menifee site. To identify the modifications to the existing PDF II design (for PVRWRF site), the Preliminary Design Report (PDR) prepared in 2008 for PDF II at the PVRWRF site needs to be updated and revised to identify the facilities needed for the Menifee site and changes required to the existing design of PDF II.

In addition, EMWD is considering implementing indirect potable reuse (IPR) by producing up to 15,000 acre-feet per year (13.5 million gallons per day [mgd]) of purified water to supplement potable water supplies. The Menifee site is one of the potential sites for IPR water purification facilities. As a part of the PDF II PDR, CH2M will also evaluate how to cost effectively plan the PDF II at Menifee site to

allow for future expansion, if needed. This evaluation will include the infrastructure requirements, site layout, and phasing considerations for ultimate Phase I 5.4 mgd facility as well as future expansion by 13.5 mgd (18.9 mgd total).

On February 18, 2015 EMWD contracted CH2M to develop the 2008 PDR Update to review and update the design criteria developed in the 2008 PDR and incorporate the synergies and design modifications identified in the Perris II Desalter Relocation Feasibility Technical Memorandum (CH2M, 2015).

1.2 Project Description

A network of groundwater wells will supply PDF II source water. The wells are located in three groundwater sub-basins: Perris South II, Menifee I, and Lakeview. Wells containing high iron (Fe) and manganese (Mn) (Wells 75 and 85) will be treated through an Fe/Mn removal facility. The Fe/Mn treated water will be bypassed around the RO system and blended with RO permeate before disinfection.

In the initial phase I, 3.0 mgd of RO permeate will be produced through two RO trains and will be blended with Fe/Mn treated water (bypassed around the RO system) prior to disinfection.

At the ultimate phase I, 4.5 mgd of RO permeate will be produced through three RO trains and will be blended with Fe/Mn treated water (bypassed around the RO system) prior to disinfection.

The RO trains will be configured in two stages and operate at a minimum recovery of 72 percent.

RO concentrate water will be disposed into the existing brine pump station while startup and off-specification (off-spec) water will be discharged into one of the existing ponds at the Sun City site. Finished product water (blended RO permeate and Fe/Mn treated water that is stabilized and chlorinated) will be delivered to the existing water supply system by the finished water pump station.

The PDF II will be fully automated and operational on a 24-hour-per-day, 7-days-per-week basis with a plant operator in attendance only during one 8-hour shift. Following are the major components of the PDF II design:

- Treatment processes
- Site layout and non-process facilities

1.2.1 Treatment Processes

Fe/Mn Removal Facility

The 2008 PDR considered that the entire RO feed flow was treated through the Fe/Mn removal facility. The Well Bacteria Study conducted by CH2M HILL (CH2M) in 2015 indicated that a rapid cartridge filter fouling observed starting in late 2014 at Perris I and Menifee Desalination Facilities was linked to the high bacterial activity in Wells 75, 85 and 89. Although disinfection of these wells temporarily eased the problem, bacteria related issues are expected to persist in future. Therefore, the study identified that segregating and treating flows from Wells 75 and 85 through the existing Fe/Mn removal facility is the best approach to avoid bacteria related concerns in RO operation. Well 89, another high bacteria containing well, uses a common conveyance system with well 81 and 76. Therefore, segregating and conveying flow from this well to iron/manganese facility is not possible without constructing a new pipeline. Considering capacity of Well 89 (500 gallons per minute [gpm]) and high bacterial activity in that well, the study recommend EMWD take Well 89 out of service and not used it as a raw water supply source in future.

The existing Fe/Mn removal facility capacity (9-10 mgd) is adequate for treating flows from the two existing southern Wells 75 and 85 (currently a total flow of approximately 3.5 mgd). Given the capacity of the Fe/Mn removal facility, the existing Fe/Mn removal facility can treat additional flow. Treating only

the flow from wells with high Fe/Mn through the existing Fe/Mn facility will eliminate construction of the new Fe/Mn removal facility and associated chemical feed and storage facilities, thereby substantially reducing capital and O&M cost of PDF II.

RO System

This system will be located in the RO Building and will include the following major components:

- Three cartridge filters with 5-micron cartridges
- Two high-pressure RO feed pumps equipped with adjustable frequency drives (AFDs) for first two RO trains with provision for one additional RO feed pump for the future RO train.
- Two 2-stage RO trains, each capable of producing up to 1.5 mgd of permeate and each equipped with an interstage turbocharger with provision for one future RO train.
- Each RO train will have a third stage pre-fouling warning system. The pre-fouling warning will provide continuous feedback on RO performance and fouling nature. The system will consist of a 4-inch diameter pressure vessel that houses a single 4-inch RO element, and online monitoring devises including flow meters, pressure indicators, and conductivity meters.
- Online sampling system including sample pumps, analyzers, bubble traps, and panels for process monitoring purposes. This will include measurements of conductivity, temperature, and pH.
- RO CIP system including tank, pump and cartridge filter.
- Fully automated flush system including permeate storage tank and pump.
- Pipe trenches under the RO trains with pipe headers.
- Decarbonator tower located downstream of the RO trains and designed to remove up to 95 percent of the carbon dioxide (CO_2). The decarbonator tower and air inlet filter will be located outdoors, and the air blower will be located inside the RO building.
- Chemical storage and feed system for each of the following chemicals:
  - Threshold inhibitor (TI) and sulfuric acid injected into the RO feed for scale control.
  - Sodium hypochlorite injected downstream of the decarbonator, upstream of the chlorine contact tank, or downstream of the CCT for free chlorine disinfection of the finished water.
  - Fluoride injected downstream of the finished water pump station.
  - Sodium hydroxide injected downstream of the RO system to adjust pH and control corrosivity in the finished water. Sodium hydroxide will also be used for the CIP system.
  - Ammonia injected downstream of Clearwell to develop combined residual in the finished water.
  - Cleaning agents used during CIP of the RO trains.

Each of these chemical systems will have its own containment area and will consist of a storage tank(s), transfer or metering pumps, and associated piping and valves. All metering pump adjustments will be accessible from outside the containment areas and shielded by sliding plexiglass windows. The design of the chemical storage and feed systems will include provisions for the future increased treatment capacity once the third RO train is in place. These provisions include sizing the metering pumps for a full range of chemical dosing. The minimum dosing is when only one RO train is in operation and the maximum dosing is when all three RO trains are in operation. As such, the chemical storage tanks will store chemicals for the ultimate plant capacity.

A chlorine contact tank for disinfection of the entire finished water flow designed to achieve the required chlorine residual x contact time (CT) based on the United States Environmental Protection

Agency (EPA) Disinfection Profiling and Benchmarking Guidance Manual (EPA, 1998). The chlorine contact tank will be below grade and covered with a concrete roof slab to prevent chlorine residual dissipation due to sunlight and introduction of dust or other foreign matter. Access hatches will be provided for maintenance activities. Disinfected water will flow to a finished water pump station containing vertical turbine pumps equipped with AFDs. The design of the chlorine contact tank and the finished water pump station will include provisions for the additional finished water flow rate once the third RO train is in place as well as the upper limit of the bypass flow. Finished water will be pumped into the existing water supply system through a connection to the existing Murrieta Road pipeline.

At the Perris I and Menifee Desalters, there are three brine pumps (two duty and one standby), each with a capacity of 1,250 gpm at 167 feet. At design capacity and 70 percent design recovery, the Perris I and Menifee Desalters generate a brine flow of 2,230 gpm. PDF II will generate approximately 810 and 1,220 gpm of brine flow for the initial phase and ultimate phase of PDF II at a minimum design recovery of 72 percent. The existing Brine Pump Station will be used to handle brine generated from all three desalters by replacing the existing three 1,250 gpm pumps with larger pumps (i.e., 2,500 gmp pumps). The pumps will be vertical turbine pumps with AFD-driven electric motors. The existing pump station has an air gap that prevents any potential backflow from the brine pipeline, which complies with State Water Resources Control Board Division of Drinking Water (DDW)

A new brine discharge station with containment area will be located on the PDF II site to allow receiving, monitoring and transferring the brine from haulers to the existing brine pump station. The brine discharge station will be isolated from the process areas to eliminate the need for brine haulers to enter District's Desalination Facilities.

1.2.2 Site Layout and Non-process Facilities

The site layout and non-process components will consist of the following:

- Access roads and gates to ensure easy egress and ingress of vehicles, especially for chemical delivery purposes (chemical trucks up to 65 feet long).
- Grading, drainage, access roads, parking, yard piping, and landscaping.
- A stand-alone wall along the perimeter of the site, security cameras, keycard-enabled doors, and outdoor lighting for security purposes.
- A prefabricated building to house the RO system and chemical storage and feed system described above (except for the decarbonator tower and salt tank) in addition to the following major components:
  - Electrical equipment
  - Heating, ventilation and air conditioning (HVAC) system
  - Local control room
  - Restroom
  - Maintenance shop and storage area
- Because PDF II will be built at the Menifee site, the existing offices and break rooms, conference and training rooms, and laboratory facilities in the existing administration building will be used.
- A prefabricated building to house the finished water pump station and contain the sound from the pumps.

The PDF II electrical power supply and feed system will be supplied via switchgear directly from Southern California Edison (SCE). The design of the uninterruptible power supply (UPS) system will be based on a centralized UPS source.

The PDF II control systems will have a supervisory control and data acquisition (SCADA) system consisting of programmable logic controllers (PLCs) connected through a communications system to computer workstations with human-machine interfaces (HMIs). The SCADA system will be able to communicate with the existing EMWD system. The fiber-optic system for the SCADA will be coordinated with the PVRWRF expansion project. A workstation with a historian server will be housed in the control room in the administration building. The historian will be compatible with all standards defined by EMWD. The communications system will include a telephone system (via network) and a computer local area network. The design of the electrical and control systems incorporates provisions for the future third RO train.

SECTION 2

Raw Water Supply Wells and Water Blending

2.1 Introduction

This section describes the raw well water supply system serving EMWD's existing and new desalination facilities. This section also discusses the well water quality and blend options, water quality goals, and system integration for PDF II.

2.2 Raw Water Supply Wells

A network of groundwater wells will supply PDF II source water. Figure 2-1 shows the location of the existing groundwater wells and transmission pipelines and Table 2-1 summarizes capacities of the raw water wells.

The 2008 PDR relied on treating a blend of wells (Wells 76, 77, 81, 82, 83, 84, 86, 87, 88 and 89) through a new Fe/Mn removal facility and bypassing up to 10-15 percent raw water around the RO. Based on desalination facility operation experience and EMWD's interest in the increased production capacity of the desalination facility, a number of critical decisions have been made which may have significant impact on supply source selection, bypass approach and design of PDF II. These decisions include:

1. **Treat high iron/manganese containing wells** (southern Wells 75 and 85) via the Fe/Mn removal facility and bypass the Fe/Mn treated flow around RO and use them as product water blend. The Well Bacteria Study indicated that a rapid cartridge filter fouling observed starting in late 2014 at Perris I and Menifee Desalters Facilities was linked to the high bacterial activity in Wells 75, 85 and 89. Although disinfection of these wells temporarily eased the problem, bacteria related issues expect to persist in future. Therefore, the study identified that segregating and treating flows from Wells 75 and 85 through the existing Fe/Mn removal facility is the best approach to avoid bacteria related concerns in RO operation. Well 89, another high bacteria containing well, uses a common conveyance system with Wells 81 and 76, segregating and conveying flow from this well to the Fe/Mn removal facility is not possible without constructing a new pipeline. Considering capacity of Well 89 (500 gpm) and high bacterial activity in that well, the study recommends EMWD take Well 89 out of service and not use it as a raw water supply source in future.

2. **Maximize raw water bypass around RO system.** PDF II as well as Perris I and Menifee Desalters can be operated with higher bypass flow percentages as long as finished water fully satisfies California and Federal Drinking Water Criteria. Our initial estimations have shown that total dissolved solids (TDS) is the parameter that limits the maximum bypass achievable around the RO. TDS has a secondary maximum contaminant level in California and Federal Drinking Water standards with a recommended, upper and short term levels of 500, 750 and 1,000 milligrams per liter (mg/L). The finished water TDS objective was set at 600 mg/L at kickoff meeting on March 10, 2015. The bypass flow achievable was determined using a target TDS concentration of 540 mg/L which is 10 percent below the TDS objective of 600 mg/L to account changes in raw water quality as well as the permeate quality

   Table 2-2 presents the key water quality parameters and blend qualities for northern and southern wells.

3. **Consider decarbonation of the Fe/Mn treated effluent.** Well 76 and 81 blends have relatively low pH with high alkalinity and carbon dioxide concentration. There will be little change in these parameters for wells treated by an Fe/Mn removal facility. Combination of low pH and high CO2 substantially increases caustic doses for post treatment (pH adjustment for water stabilization).

Increased caustic not only increases chemical usage and but also increases operation cost and TDS content of the finished water. Implementation of a decarbonator to treat Fe/Mn treated water may reduce chemical doses and TDS impact in finished water. Therefore, a decarbonator will be provided downstream of the existing Fe/Mn removal facility.

4. **Assess the impact of AquaSel RO concentrate treatment and recovery system on plant operation, bypass percentages and finished water quality.** EMWD is currently pilot testing the AquaSel, an electrodialysis reversal (EDR) - crystallizer system from GE Water and Process Technologies, to investigate feasibility of treating and recovering RO concentrate streams generated from the existing desalters and using AquaSel product water as an alternative blend source to increase output of PDF II and the Perris I and Menifee Desalters. The PDR will provide input on feasibility of using AquaSel product water as a blend water source.

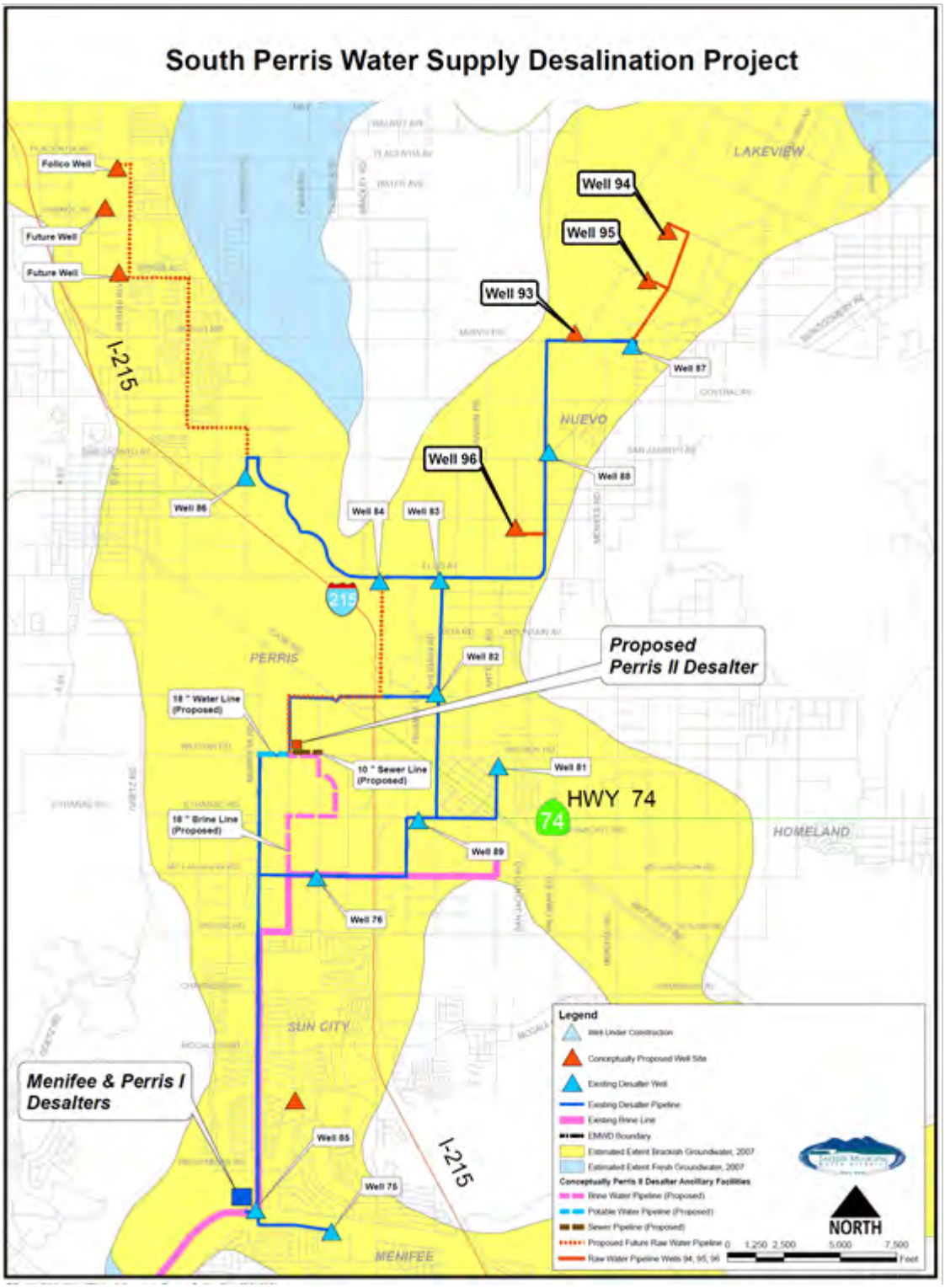

Figure 2-1 EMWD Desalination Wells and Transmission Pipes

Table 2-1 PDF II Raw Water Supply

Wells	Design Flow (gpm)	Pump Type	Pump Drive
Existing Wells[1]			
76	1,600	Vertical Turbine	Constant Speed
81	750	Submersible	Variable Speed
82	1,000	Submersible	Variable Speed
83	750	Submersible	Variable Speed
84	750	Submersible	Variable Speed
86	1,300	Submersible	Variable Speed
87	750	Submersible	Variable Speed
88	1,000	Submersible	Variable Speed
75[2]	1,000	Submersible	Variable Speed
85[2]	1,400	Submersible	Variable Speed
Total Design Capacity of the Existing Wells	10,300		
New Wells			
93	2,200	Submersible	Variable Speed
94	600	Submersible	Variable Speed
95	600	Submersible	Variable Speed
96	600	Submersible	Variable Speed
Total Design Capacity of the New Wells	4,000		
Total Well Capacity Including New Wells	14,300		

[1]Wells 77 and 89 are out of service and will not be considered as part of the EMWD's raw water supply system

[2]High iron, manganese and bacteria containing these wells (referred to the Southern Wells) will be used for blend.

2.3 Well Water Quality and Well Blend Operational Scenarios

2.3.1 Well and Blend Water Qualities

Existing southern Wells 75 and 85 will be used as the primary bypass source and additional bypass flows if needed will be supplemented from new Southern or Northern wells. The four new northern wells (Wells 93, 94, 95 and 96) will supply additional water for the desalination facility expansion. Table 2-2 presents EMWD Desalination Facility wells, well capacities and flow weighted average of key water quality parameters. Appendix A presents detailed water quality for each well as well as blends.

Table 2-2 Southern and Northern Well Blends and Water Quality

	Southern Wells	Northern Wells
Wells Available	75 and 85	76,81,82, 83, 84, 86, 87, 88, 93, 94, 95 and 96
Total Flow, gpm	2,400	11,900
TDS Range, mg/L	1,080-2,005	872-2,810
Flow Weighted Average TDS, mg/L	1,465	1,810
Flow Weighted Average Alkalinity, mg/L as $CaCO_3$	336	169
Flow Weighted Average CO2[A], mg/L	255	22
Flow Weighted Average pH[A], SU	6.37	7.12
Flow Weighted Average Fe, µg/L	1,350	49
Flow Weighted Average Mn, µg/L	310	8

[A] Estimated using Water Pro™ 3.05, a water quality blend and corrosion analysis software published by ChemSWR
µg/L: micrograms per liter

Table 2-2 indicates that Southern Wells contain lower TDS but much higher Fe/Mn than northern wells. Therefore, treating southern wells through an Fe/Mn removal facility and using the treated flow as blend is advantageous for maximizing bypass flow and increasing overall throughput of PDF II.

2.3.2 Well Blend and Operational Scenarios

Comprehensive mass balances were developed to determine lower and upper limit of bypass achievable while fully satisfying California and Federal Drinking Water Quality Requirements. To estimate lower and upper bypass flow percentages, a number of operational scenarios were developed, and are presented in Table 2-3. In each scenario, the finished water TDS goal was set at 540 mg/L which was 10 percent below the TDS objective of 600 mg/L to account for changes in raw water quality as well as the permeate quality.

Table 2-3 Well Blend and Operational Scenarios

Scenario Number	Approach	Purpose
1	All RO trains in all three desalination facilities in service. Supplement additional bypass from the southern wells, if needed. Use Perris I and Menifee design recovery of 70 percent and PDF II design recovery of 72 percent[A].	Estimate lower range of bypass flow achievable.
2	All RO trains in all three desalination facilities in service. Supplement additional bypass from the northern wells, if needed. Use Perris I and Menifee design recovery of 70 percent and PDF II design recovery of 72 percent[A].	Estimate lower range of bypass flow achievable
3	Only PDF II in service, avoid use of Well 75. Supplement additional bypass from the southern wells (assumes additional bypass is supplied with a new southern well with similar capacity and water quality characteristics to Well 85. Use PDF II design recovery of 72 percent[A].	Estimate upper range of bypass flow achievable
4	Only PDF II in service, use only Well 85 and supplement additional bypass from the northern wells. Use PDF II design recovery of 72 percent[A].	Estimate upper range of bypass flow achievable

Table 2-3 Well Blend and Operational Scenarios

Scenario Number	Approach	Purpose
5	Only PDF II in service, avoid use of Well 75. Depending on Scenarios 3 and 4 outcome, supplement additional bypass from either southern or northern wells. Run scenarios for decarbonating Fe/Mn treated flow and assuming operating recovery of 80 percent at PDF II	Determine upper range of bypass flow when PDF II is operated at higher recoveries
6	All RO trains in all three desalination facilities in service. Treat RO concentrate stream via AquaSel and use the AquaSel product water as blend. Supplement additional bypass from AquaSel treated water. Use PDF II design recovery of 72 percent[A].	Compare bypass achievable for this scenario with Scenarios 1 and 2

[A] Conservative recovery that requires bringing more raw water supply to RO for treatment. This design recovery was also used in the Original PDF II PDR (CH2M HILL, 2008)

The following steps were taken to develop a comprehensive mass balances to predict upper bypass percentage achievable and finished water quality under each scenario:

1. Use established water quality in Table 2-2 and run IMS Design™, a proprietary RO design software from Nitto Denko Corporation (formerly Hydranautics) to estimate RO permeate quality for the 72, 75 and 80 percent water recovery cases. Each case, RO permeate flow was set at 4.5 mgd (3,125 gpm). For conservatism, the RO runs were performed assuming RO membranes are 5 years old. The RO projections are presented in Appendix B.
2. Select a bypass flow.
3. Run Water Pro™ 3.05 to project water quality for blended water supplies, after decarbonation and after chemical addition (i.e., impact of sodium hypochlorite and caustic addition in finished water quality (i.e., pH, alkalinity, etc.). Chemical addition for water stabilization and finished water quality assumed the following:
   a) Chlorine dose of 2 mg/L for disinfection
   b) Langelier Saturation Index (LSI) of +0.05-+0.1 in finished water
   c) Alkalinity of no less than 50 mg/L in finished water
4. Increase or reduce bypass flow in Step 2 to meet finished water quality objectives.
5. Repeat steps 3 through 5 until finished water quality objectives are met and a satisfactory solution is found.

In each scenario, the two southern wells (Wells 75 and 81) will be used as the primary bypass source and additional bypass flow, if needed, will be supplemented from either southern or northern wells.

2.3.3 Well Blend and Operational Scenario Projections

Scenario 1

This scenario assumes all RO trains in PDF II, Perris I and Menifee (at ultimate capacity) are in service. Northern wells are treated through RO whereas bypass flows are supplied from the two existing southern wells, which do not receive any RO treatment but are treated through the existing Fe/Mn removal facility. Additional bypass, if needed, is supplemented by constructing new southern wells.

A number of iterations were performed to determine bypass flow achievable by setting TDS goal at 540 mg/L and satisfying all California and Federal Drinking Water Quality Requirements. The successive iterations showed that the TDS was the limiting factor that restricted the amount of achievable bypass flow. The process schematic and resultant finished water TDS quality estimated using the mass balance for Scenario 1 are presented in Figure 2-2.

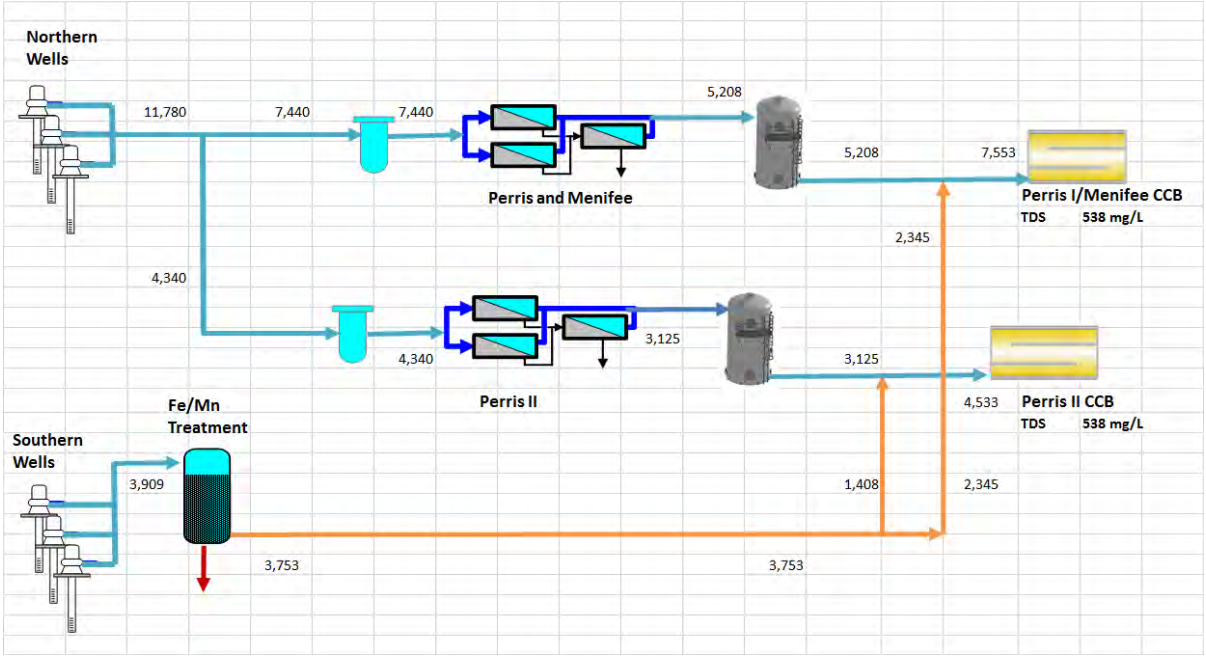

Figure 2-2 Scenario 1 Process Schematic

In order to meet a finished water TDS goal of 540 mg/L, the bypass flow should not exceed 3,900 gpm which restricts the maximum bypass flow for PDF II and Perris I/Menifee Desalters to approximately 1,410 and 2,350 gpm, respectively which yields a bypass percentage of 45 percent. The original PDF II PDR (CH2M HILL 2008) defined the bypass percentage as the bypass flow divided by RO product flow. The same definition was used, herein, to describe bypass percentage for consistency. As seen from Figure 2-2, the bypass flows are blended with RO permeate flows such that it yields the same bypass percentage in each desalination facility. The Perris I and Menifee Desalters and corresponding feed and permeate flows are shown together in Figure 2-2.

Fe/Mn treated effluent has a low pH (6.47) and relatively high CO_2 concentration (175 mg/L) which required a caustic dose of 44 mg/L (as 100 percent) for water stabilization when RO-treated and bypass flows are blended before post-treatment. Such a high caustic dose further contributes to the TDS content of the finished water. Decarbonating Fe/Mn treated effluent to strip most of the carbon dioxide could be beneficial in reducing caustic dosage (reduction in operation cost) and TDS content in finished water. Decarbonating bypass flow and resultant water quality is provided in Scenario 5

Appendix C presents mass balance details, water stabilization requirements and complete water quality projections.

Scenario 2

This scenario assumes all RO trains in PDF II, Perris I and Menifee (at ultimate capacity) are in service. Northern wells are treated through RO whereas bypass flows are supplied from the two existing southern wells, which do not receive any RO treatment but are treated through the existing Fe/Mn removal facility. Additional bypass, if needed, is supplemented from northern wells.

A number of iterations were performed to determine bypass flow achievable by setting TDS goal at 540 mg/L and satisfying all California and Federal Drinking Water Quality Requirements. The successive iterations showed that the TDS was the limiting factor that restricted the amount of bypass flow achievable. The process schematic and resultant finished water TDS quality per mass balance for Scenario 2 are presented in Figure 2-3.

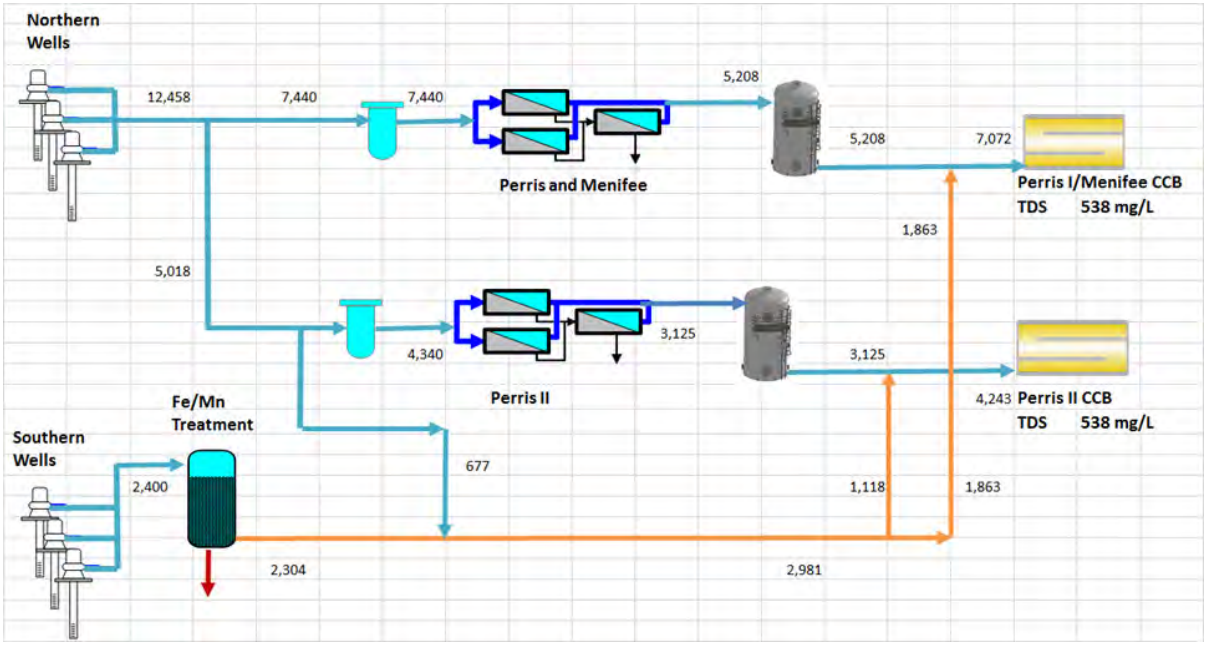

Figure 2-3 Scenario 2 Process Schematic

In order to meet finished water TDS goal of 540 mg/L, the total bypass flow should not exceed 2,980 gpm which restricts the maximum bypass flow achieved at approximately 1,120 and 1,860 gpm for PDF II and Perris I/Menifee Desalters, respectively which yielded a bypass percentage of 36 percent. The maximum bypass percentage achievable in this scenario was 9 percent lower than that of Scenario 1. The bypass flow with Scenario 2 contained higher TDS content than that with Scenario 1 thereby requiring reduction in bypass flow to meet the target TDS goal. Therefore, Scenario 1 supplying additional bypass flows from Southern Wells is a better option than Scenario 2 to maximize bypass flows and increase overall product flow of PDF II.

Mass balance details, water stabilization requirements and complete water quality projections are presented in Appendix C.

Scenario 3

Scenario 3 assumes only PDF II (at ultimate capacity) is in service while the remaining Desalters are offline. Since much less water is needed for this scenario than the previous two scenarios, it may allow selection of better water quality well(s) for the supply source which in turn may increase bypass percentage achievable and amount of water produced at PDF II. Therefore, this scenario reflects the upper limit of bypass achievable at PDF II.

This scenario considered using Well 85 as a bypass flow source only. If supplemental bypass flow is needed another well with a similar characteristic of well 85 will supply the additional flow needed.

A number of iterations were performed to determine bypass flow achievable by setting TDS goal at 540 mg/L and satisfying all California and Federal Drinking Water Quality Requirements. The successive iterations showed that the TDS was the limiting factor that restricted the amount of bypass flow achievable. The process schematic and resultant finished water TDS quality per mass balance for Scenario 3 are presented in Figure 2-4.

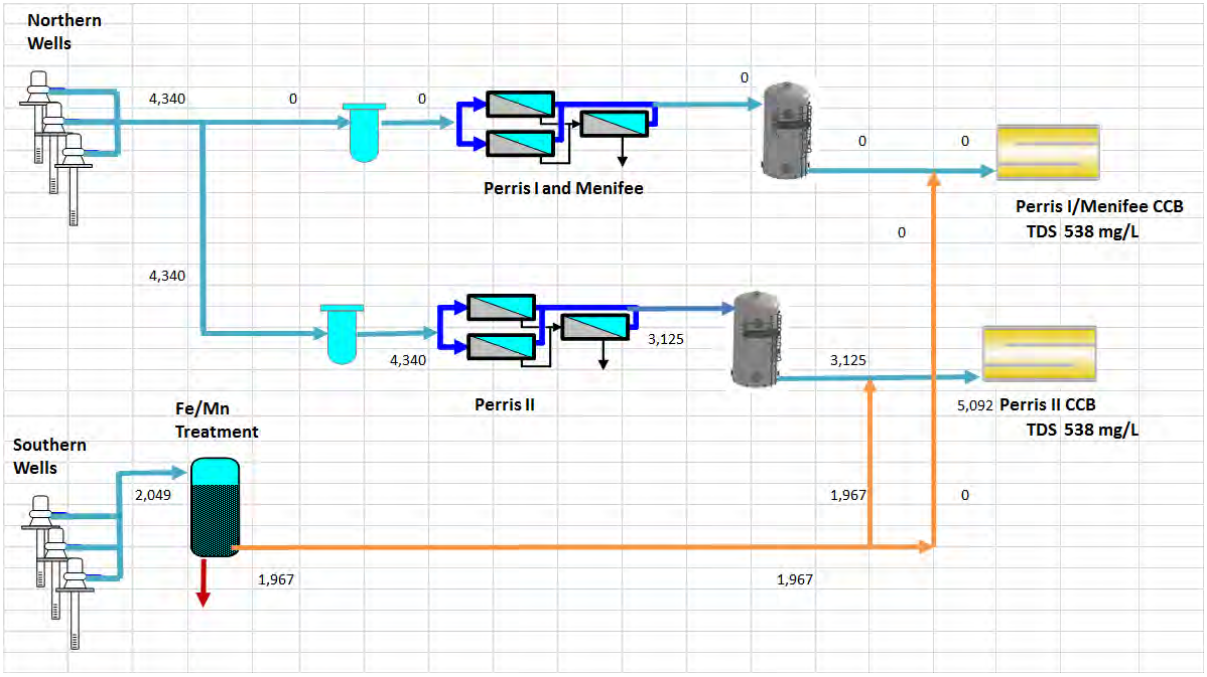

Figure 2-4 Scenario 3 Process Schematic

In order to meet the finished water TDS goal of 540 mg/L, the total bypass flow should not exceed 1,970 gpm for PDF II, which yielded a bypass percentage of 63 percent. Mass balance details, water stabilization requirements, and complete water quality projections are presented in Appendix C.

Scenario 4

This scenario is similar to Scenario 3. Well 85 is the main source for the bypass flow whereas supplemental flow for bypass is supplied from the northern Wells.

A number of iterations were performed to determine bypass flow achievable by setting TDS goal at 540 mg/L and satisfying all California and Federal Drinking Water Quality Requirements. As in all previous scenarios, TDS was the limiting factor that restricted the amount of bypass flow achievable. The process schematic and resultant finished water TDS quality for Scenario 4 are presented in Figure 2-5.

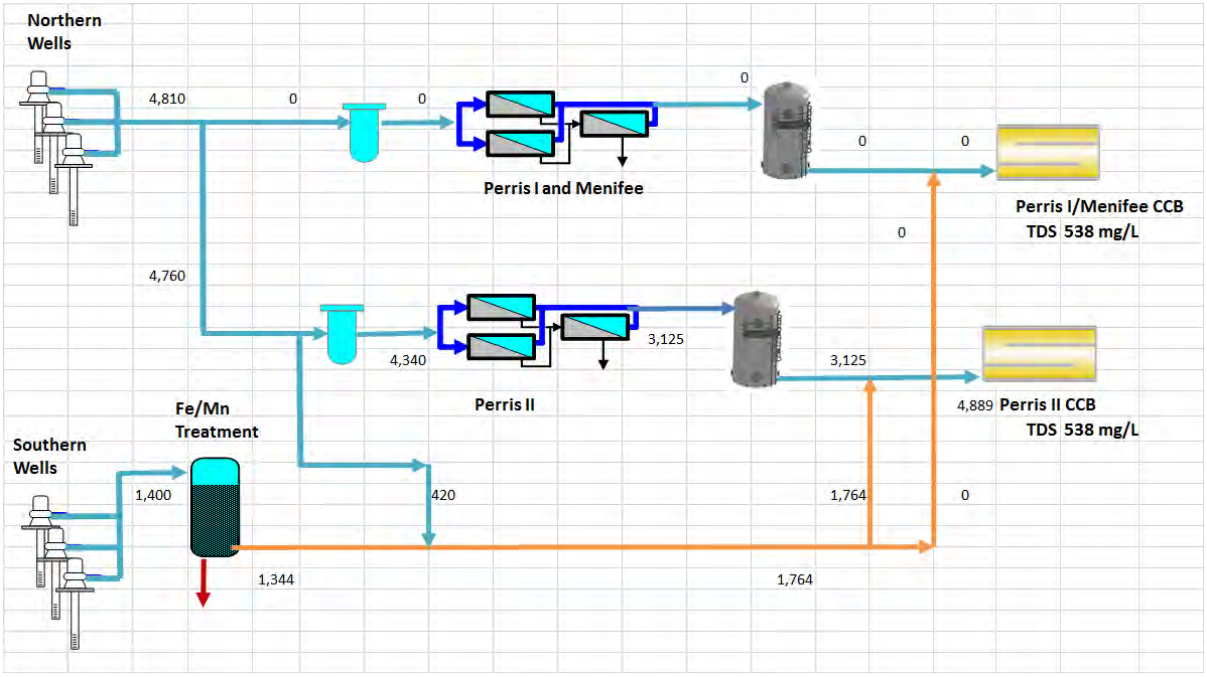

Figure 2-5 Scenario 4 Process Schematic

According to Figure 2-5, in order to meet the finished water TDS goal of 540 mg/L, the total bypass flow should not exceed 1,760 gpm for PDF II, which yielded a bypass percentage of 56 percent. The maximum bypass percentage achievable in this scenario was 7 percent lower than Scenario 3. The bypass flow with Scenario 4 contained higher TDS content than that with Scenario 3, requiring reduction in bypass flow to meet the target TDS goal. Therefore, Scenario 3 supplying additional bypass flows from Southern Wells is a better option than Scenario 4 to maximize bypass flows and increase overall product flow of PDF II.

Mass balance details, water stabilization requirements and complete water quality projections are presented in Appendix C.

Scenario 5

This scenario is very similar to Scenario 3 but assumes a higher RO recovery (80 percent) at PDF II to evaluate the impact of increased RO recovery on finished water quality and amount of bypass achievable. This scenario considered using Well 85 for bypass flow source only. If supplemental bypass flow is needed a new Southern well with a similar characteristic of Well 85 will supply the additional flow needed.

A number of iterations were performed to determine bypass flow achievable by setting TDS goal at 540 mg/L and satisfying all California and Federal Drinking Water Quality Requirements. The successive iterations showed that the TDS was the limiting factor that restricted the amount of bypass flow achievable. The process schematic and resultant finished water TDS quality per mass balance for Scenario 5 are presented in Figure 2-6.

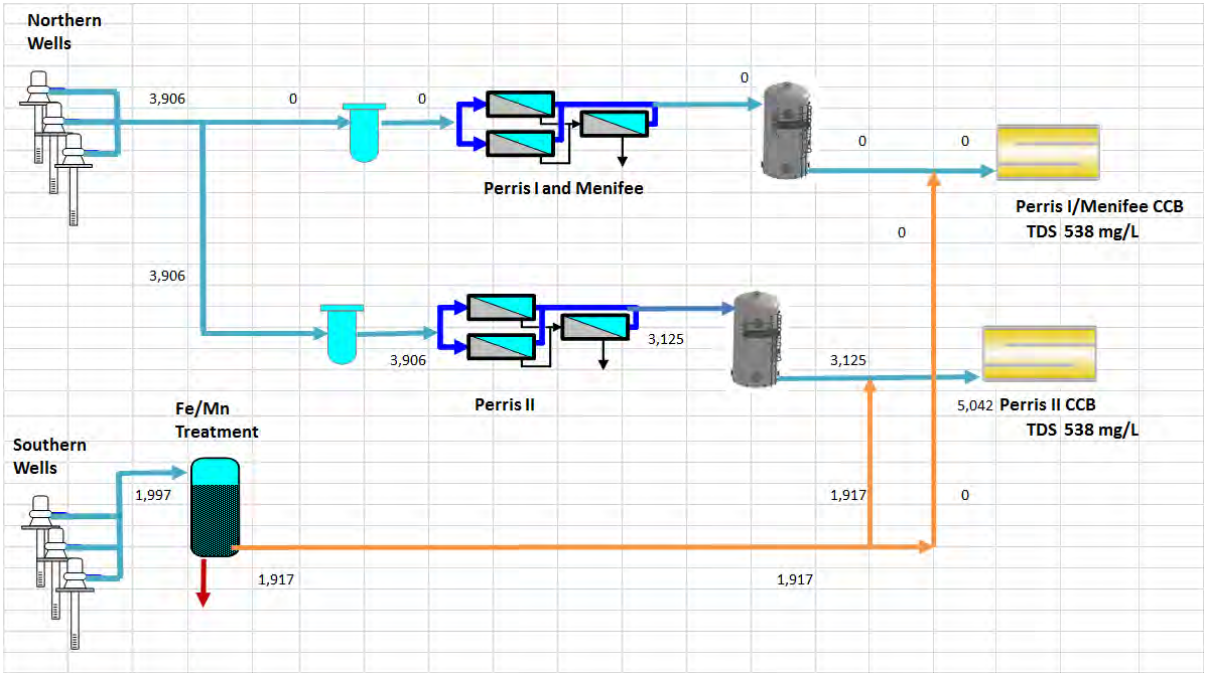

Figure 2-6 Scenario 5 Process Schematic

Increasing operating RO recovery to 80 percent resulted in slight deterioration in RO permeate quality (IMS Design™ projected an RO permeate TDS of 58 mg/L at 80 percent compared to 46 mg/L at 72 percent RO recovery). Because, finished water quality is dependent on the RO permeate quality, a slight deterioration in RO permeate quality requires a slight reduction in bypass flow to meet the TDS goal of 540 mg/L. The mass balance calculations presented in Appendix C indicate that bypass flow should not exceed approximately 1,920 mg/L to meet the finished water TDS goal. This yields a bypass percentage of 61 percent (A net 2 percent reduction compared to the 72 percent RO recovery operation; Scenario 3).

Scenario 6 – A Blend Scenario with AquaSel

AquaSel, a proprietary process of the General Electric (GE) Process and Water that couples EDR with crystallizer to treat and recover RO concentrate streams, is being pilot tested for treating and recovering RO concentrate generated at Perris I and Menifee Desalination Facilities. The product water from AquaSel may be considered as an alternative bypass source for blend, contingent upon:

- Extended pilot testing to demonstrate that the product water quality is compatible with raw water quality to allow similar amount of bypass as in previous scenarios
- Approval of the regulatory agencies. The RO membranes effectively retain threshold inhibitors (antiscalants) to minimize scaling on RO membranes. As a result, concentrations of compounds used in threshold inhibitors are elevated in RO concentrate streams. EDR cannot retain many organic compounds (especially those with neutral charge characteristics) including threshold inhibitors, which do not have National Sanitation Foundation (NSF)/American National Standards Institute (ANSI) approval for drinking water applications. Using AquaSel product water as a bypass source without additional treatment deserves discussion with the regulatory agencies.

With a limited water quality data available (based on May 4, 2015 sampling), AquaSel product has a higher TDS and chloride than other bypass sources (i.e. southern and northern wells) which could restrict the amount of bypass flow around RO. AquaSel product key water quality parameters based on Perris I and Menifee Desalters RO recovery of 71 percent are summarized in Table 2-4.

Table 2-4 AquaSel Product Water Quality (Based on 05/04/2015 Sampling Results)

Parameter	Value	Key Concerns
Alkalinity, mg/L as $CaCO_3$	590	
pH, standard unit	7.6	
Chloride, mg/L	700	Higher than supply (blend) sources; reduce the bypass percentage when used as a supply source
Nitrate, mg/L	74	
Iron, µg/L	186	
Manganese, µg/L	30	
Silica, mg/L	130	Much higher than supply sources; cannot be returned to the head of the RO
TDS, mg/L	2,120	Higher than supply (blend) sources; reduce the bypass percentage when used as a supply source

Using the water quality data summarized in Table 2-4 in the mass balance indicated that if AquaSel product is used as a bypass at EMWD desalters, the bypass flow percentage should not exceed 29 percent to meet the target TDS goal of 540 mg/L, which will result in a net reduction of 16 percent in bypass flow compared to Scenario 1. This scenario was developed assuming all RO trains in all three desalters in service. The process schematic and resultant finished water TDS quality for Scenario 6 are presented in Figure 2-7.

Using AquaSel product as a bypass source, if approved by regulatory agencies, is not as good as using the water from southern and northern wells. Returning AquaSel product water to the head of the RO for further treatment is not feasible due to high silica content of AquaSel product water. Therefore, other disposal or reuse options for AquaSel product (i.e. blending with recycled water) may be considered.

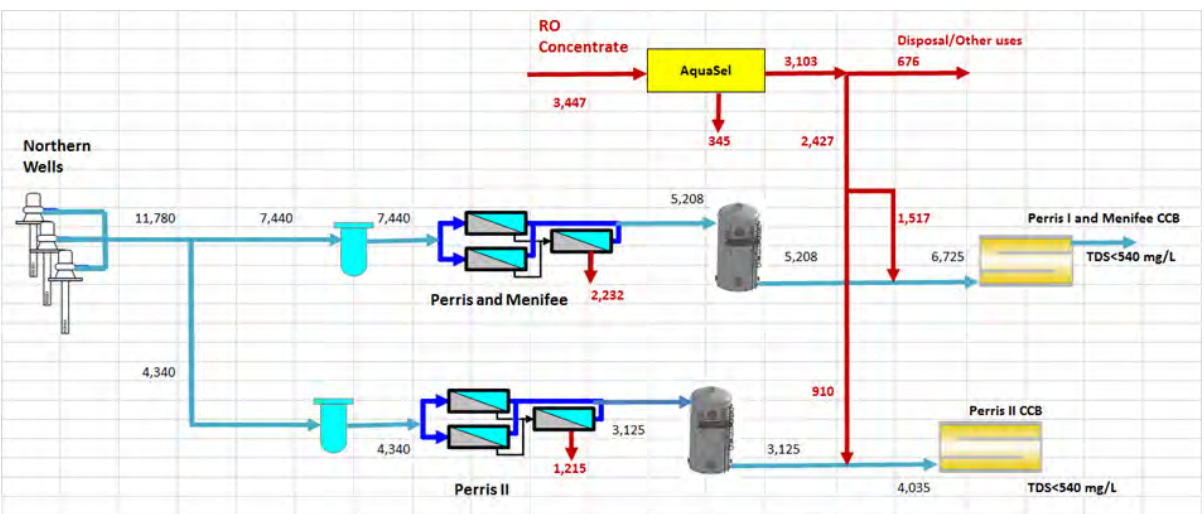

Figure 2-7 Scenario 6 Process Schematic

2.4 Water Quality Goals

Comprehensive mass balances were developed to determine maximum amount of bypass achievable around RO while fully satisfying California and Federal Drinking Water Standards to maximize production (throughput) of the PDF II and Perris I and Menifee Desalters. The following conclusions can be drawn from this assessment:

- Bypass percentage is between 36 and 63 percent depending upon how the additional bypass flow is supplemented (southern versus northern wells). For PDF II this bypass percentage translates:
  - Bypass flow = 1,120-1,970 gpm
  - RO permeate flow = 3,120 gpm
  - Finished water flow = 4,240 – 5,090 gpm
- Using existing southern Wells 75 and 85 and supplementing additional bypass flow by constructing a new well in South is the best option to maximize bypass flow and PDF II product capacity.
- Decarbonating Fe/Mn treated effluent may reduce chemical consumption and increase the blend amount.
- Bypass flow of up to 75 percent should be considered for sizing bypass pipeline, chlorine contact tank and finished water pump station. At final Phase I (all three PDF II trains in service), it translates:
  - Max Bypass Flow = 2,340 gpm (3.4 mgd)
  - RO Permeate = 3,130 gpm (4.5 mgd)
  - Max Finished Water =5,470 gpm (7.9 mgd)
- Based on 75 percent bypass, PDF II bypass pipeline will be sized for 2,400 gpm (3.5 mgd).
- Based on 75 percent bypass, PDF II CCT and FWPS will be sized for 5,500 gpm (7.9 mgd).

As part of the 2008 PDR, a number of blend analysis was performed using combination of the 10 wells presented in Table 2-1. According to the 2008 PDR, PDF II will operate at a raw flow range between 1,620 and 4,690 gpm. Raw water blends were developed to serve as the basis for the process design based on the following blend characteristics:

- Low TDS (has impact on RO feed pressure and pump selection, sets lower operating pressure along with temperature, membrane age and membrane characteristics)
- High TDS (has impact on RO feed pressure and pump selection, sets upper operating pressure along with temperature, membrane age and membrane characteristics)
- High silica (scaling concerns; has impact on RO recovery)
- High alkalinity (calcium carbonate scaling concerns; may require acid dosing to RO feed water)

The water quality for a blend of all ten wells that can serve PDF II is presented in Appendix D. Eight other blend options were also considered and are presented in Appendix D.

Based on these characteristics, the upper concentrations of silica, TDS and alkalinity were 63 mg/L), 2,600 mg/L, and 380 mg/L as $CaCO_3$, respectively. New blend analysis showed that the key water quality parameters that impact RO design are at or lower than the values used in the 2008 PDR. Therefore, the 2008 PDR RO design can handle current water quality conditions without any changes in train configurations. In fact, improved RO feed water quality projected with the new water analysis may allow operation of PDF II at increased recoveries (i.e. 75-80 percent)

2.5 System Integration

The well supply system is a closed-loop system and therefore subject to the development of transient surge conditions related to the starting and stopping of individual wells and RO trains. The existing Perris I and Menifee Desalters rely on motor-actuated valves to vent excess pressure during startup or shutdown conditions and limit high-pressure conditions that might otherwise cause individual wells to shut down. PDF II will incorporate similar provisions to relieve transient pressure conditions by installing hydraulically operated relief valves and pressure-sustaining valves.

SECTION 3

Treatment Process Facility

3.1 Introduction

PDF II will be EMWD's third desalination facility. Similar to Perris I and Menifee Desalters, RO is used as the desalination process. RO pre-treatment consists of chemical addition and cartridge filtration. RO post-treatment includes decarbonation, disinfection and stabilization.

Figure 3-1 provides a simplified schematic of PDF II.

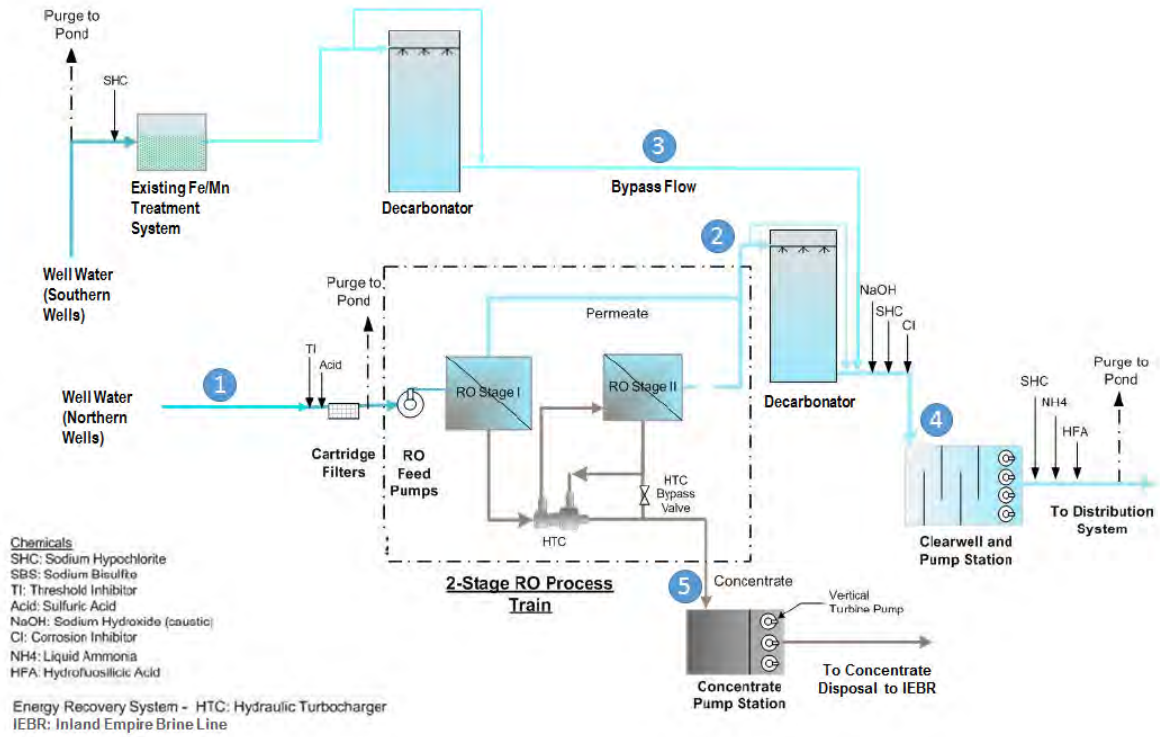

Figure 3-1 Schematic of PDFII

Southern well water will be treated through the existing Fe/Mn removal facility and will be used for bypass flow which will be blended with RO permeate prior to disinfection. The existing Fe/Mn treatment system has a design capacity of 9 mgd) and can provide the target maximum bypass flows of up to 45 percent of total RO permeate produced by Menifee, Perris I and PDF II. Therefore, no new Fe/Mn removal facility will be constructed as part of the PDF II design. The water quality analysis summarized in Section 2 showed that decarbonating Fe/Mn treated effluent would be advantageous for reducing chemical usage for post treatment and for producing finished water with lower TDS content. Therefore, a decarbonator will be added for the Fe/Mn treated flow. A provision will be provided to bypass a portion or entire flow around the decarbonator when needed.

As discussed in Section 2, northern wells will feed the RO system and are referred to as the RO feedwater. After chemical addition and cartridge filtration, the RO feedwater is pressurized by the RO feed pumps prior to entering the two-stage RO system. The RO permeate will then be degasified to remove excess carbon dioxide and improve the pH and LSI value before the post treatment. Post-decarbonator flow will blend with the bypass flow (Fe/Mn treated flow) to produce blended (product) water. Caustic and chlorine will be added to product water for pH adjustment and disinfection,

respectively. The product water is pumped into the distribution system, and additional chemicals (fluoride and ammonium sulfate) will be added prior to pumping the water.

Provisions need to be included in the final design to use fail safe actuators on the valves to the RO feed water or to divert the RO feed water to the Sun City ponds in case of a power failure.

The RO concentrate (waste stream from the RO process) will be directed to the existing Brine Pump Station and pumped into the Inland Empire Brine Line. Table 3-1 summarizes the different unit processes flow rates. The initial Phase I will consist of two RO trains, each capable of producing 1.5 mgd RO permeate. Building space will be provided to add one additional RO train to increase the total PDF II capacity to 4.5 mgd (Final Phase I).

Table 3-1 PDF II Desalination Preliminary Process Flow

		Flow Rate – mgd (gpm)	
Number [a]	**Unit Process**	**Initial Phase I (Two RO Trains)**	**Final Phase I (Three RO Trains)**
1	Combined RO Feed Water	4.2 (2,890)	6.3 (4,340)
2[b]	Combined RO Permeate	3.0 (2,080)	4.5 (3,130)
3	Bypass Flow (up to 75 percent of RO permeate)	2.3 (1,560)	3.4 (2,340)
4[b]	Clearwell and Finished Water Pump Station	5.3 (3,640)	7.9 (5,470)
5[b]	Concentrate Pump Station	1.2 (810)	1.8 (1,210)

[a] Numbers refer to the flow streams shown in Figure 3-1.

[b] Based on RO system recovery of 72 percent.

Unit processes, including, cartridge filters, the decarbonator, and associated structures (i.e., Clearwell and concentrate wet well) will be sized for the flows shown under “Final Phase I” in Table 3-1. Chemical storage and feed system will be designed for a future expansion (referred to as Phase II) which will double the PDF II RO permeate production capacity to 9.0 mgd.

The high-quality RO permeate will allow blending with bypass and still meet target water quality goals as required by DDW, formerly California Department of Public Health and EMWD. The blending ratio may vary during plant operation based on actual water quality of the wells and the RO permeate quality. As shown in Table 3-1, the RO system will be designed for a permeate production of 3 mgd with provisions for future expansion to 4.5 mgd permeate. Allowing bypass flows of up to 75 percent of RO permeate will increase PDF II capacity up to 5.3 mgd at the initial Phase I and 7.9 mgd at Final Phase I.

The following sections present the function, description, and design criteria for each unit process. Process and instrumentation diagrams (P&IDs) for all unit processes are included in the preliminary design drawings.

3.2 Pretreatment

As shown on Figure 3-1, raw water entering the facility will be pretreated prior to the RO system. The pretreatment will include chemical addition and cartridge filtration.

3.2.1 Acid Addition

The purpose of adding acid to the RO feedwater is to lower pH and bicarbonate alkalinity. Acid converts a portion of the bicarbonate in the feedwater to carbonic acid/CO_2, which lowers the pH of the water. Lower pH and bicarbonate alkalinity reduces the potential for $CaCO_3$ to become supersaturated through the RO process and form a precipitate in the RO elements and RO concentrate. Sulfuric acid is most

commonly used for RO feedwater acidification because of it is low cost. LSI is used to determine the degree of acidification required to prevent $CaCO_3$ precipitation. An RO concentrate stream LSI value exceeding +2.0 requires acid addition to prevent $CaCO_3$ precipitation. Based on currently available well water quality data (Appendix A) and RO membrane manufacturer's simulation/design models, acid dose was calculated for RO operation at 72 and 80 percent water recoveries. The models showed that acid addition would not be required at PDF II based on LSI values (less than +2.0 for various the RO feed blends and up to 80 percent recovery). No need for feed water acidification has been further supported by the operational experience at the Perris I Desalter indicating that carbonate scaling has not been an issue. However, raw water quality to PDF II may change over time and acid addition facilities will be provided in the event they may be needed in the future. However, no acid addition is planned in the near term.

3.2.2 Threshold Inhibitor

Threshold inhibitor (TI) is a polymeric substance that interferes with mineral precipitation, either by inhibiting the formation of the mineral crystals or by limiting the extent of crystal growth. Modern TIs are effective for a range of sparingly soluble minerals, including calcium sulfate, calcium fluoride, barium sulfate, strontium sulfate, and silica. TI addition at PDF II is required to control the precipitation of silica and $CaCO_3$, primarily.

TI will be added in concentrations specified by the scale inhibitor manufacturer (typically 2 to 5 mg/L). TI will be injected ahead of the sulfuric acid injection and directly upstream of an in-line static mixer (and upstream of the cartridge filters). The in-line static mixer will ensure uniform distribution of the added chemicals throughout the bulk fluid stream.

3.2.3 Cartridge Filters

Cartridge filtration will be provided after chemical addition to remove suspended solids from the RO feedwater. The filters also serve as a mixing device for the pretreatment chemicals. The cartridge filters are not expected to take heavy solids loading. Most of the turbidity and silt should be removed at the wellhead through the blow-off process; however, monitoring the pressure differential across the cartridge filter can give early warning of potential problems. There will be three filters: two duty and one standby. The duty filters are sized for both the initial and Final Phase I PDF II capacities. The criteria used to develop the pretreatment system design are listed in Table 3-2.

Table 3-2 Preliminary Process Design Criteria for the RO Feedwater Pretreatment System

Unit Process	Parameter Criteria
Cartridge Filters	
Numbers	3 (2 duty + 1 standby)
Capacity per Filter	2,500 gpm
Housing Material and Type	2205 stainless steel (SST), horizontal
Element Size	2.5-inch nominal outside diameter (OD) filter element, 40 inches long
Element Material	Polypropylene
Number of Elements per Filter Housing	12
Element Loading Rate (gpm/10-inch equivalent)	4.9 gpm/10-inch equivalent
Filter Size	5 microns

3.3 RO System

The RO system removes dissolved solids from the brackish feedwater. Under a pressure differential across the RO membrane, water flows from feed side to permeate side, while salts are retained on the feed side. This produces a low-TDS "fresh" water (permeate) and a high-TDS concentrate that is disposed of by residual pressure to a concentrate pump station. The percent of RO feedwater converted to permeate is referred to as *recovery*. As the design recovery is maximized, the required capacities for raw water supply, pretreatment, feedwater pumping, and RO concentrate (reject) disposal facilities are minimized because less water is wasted as concentrate. However, as the recovery is increased, the concentration of salts in the RO system also increases. The addition of acid and TI can improve the RO system recovery.

The hydraulic loading rate of the membrane, known as flux, is another critical design parameter. Flux is commonly defined as the product flow rate in gallons per day divided by the membrane area (gallons per day per square foot [gfd]). The flux will be determined on a case-by-case basis as it is related to feedwater quality, target permeate water quality, membrane type, and capital and O&M costs. Based on this, there is an optimum operating flux for every RO system, and operating above this optimum rate may increase membrane-fouling potentials.

The RO system comprises RO high-pressure feed pumps, 2 two-stage RO trains, and interstage hydraulic turbochargers (HTCs) for energy recovery. The purpose of the HTC is to balance flux between the two RO stages and reduce energy consumption required for RO feedwater pumping. The RO components are discussed in details in the following sub-sections.

3.3.1 RO Feed Pumps

The RO feed pump boosts the water to the pressure required by the RO system. The design pressure depends on the membrane element type, recovery, flux, HTC efficiency, and feed water quality. Each pump will be equipped with an AFD to provide the necessary feed pressure to maintain permeate flow and recovery based on variations in the aforementioned parameters. The design criteria for the RO feed pumps are presented in Table 3-3.

Table 3-3 Preliminary Process Design Criteria for RO Feed Pumps

Unit Process	Parameter Criteria	
	Initial Phase I	**Final Phase I**
Number of Pumps	2	3
Pump Type	Vertical turbine	
Pump Material	2205 SST	
Pump Capacity	1,450 gpm	
Pump total dynamic head (TDH)	370 feet	
Minimum Pump Efficiency	80 percent	
Motor Horsepower	200	
Motor Drive	AFD	

3.3.2 RO Trains

The RO system will consist of 2 two-stage RO process trains for the initial phase and one additional train (three trains) for the final phase I.

In the original PDF II 2008 PDR, a number of blend analyses was performed using combination of the 10 wells. Based on these characteristics, the 2008 PDR water quality analysis indicated a maximum TDS of 2,700 mg/L. However, per EMWD's request, it was decided to design the RO system to operate at a TDS ranging from 1,700 mg/L to 3,500 mg/L to account for future water quality changes. As can be seen from Appendix A, the flow weighted average TDS and maximum TDS concentration (Well 84) for northern wells are approximately 1,820 mg/L and 2,810 mg/L, respectively which falls within the TDS range used in the 2008 PDR. Therefore, the 2008 PDR RO design is adequate for reflecting current design approach without any changes or modifications to the 2008 PDR. The design criteria for the RO trains are presented in the Table 3-4.

Table 3-4 Preliminary Process Design Criteria for RO 2-Stage Process Trains

Unit Process	Parameter Criteria
Number of RO Trains	
Initial Phase I	2
Final Phase I	3
RO System Design Parameters	TDS Range – mg/L
RO Feedwater	1,700 to 3,500
Flows per Train	gpm (mgd)
Feedwater	1,450 (2.08) at 72 percent recovery
Permeate	1,045 (1.5) at 72 percent recovery
Concentrate	405 (0.58) at 72 percent recovery
Design RO Recovery	Up to 80 percent
Number of Stages per Train	2
Number of Pressure Vessels in Stage 1[A]	24 or 29 (for 6 elements per vessel)
Number of Pressure Vessels in Stage 2[A]	12 or 14 (for 6 elements per vessel)
Type of Vessels	Fiberglass reinforced plastic (FRP), side-port or multiport
Number of Elements per Vessel	6 or 7
Element Size	8 inches in diameter; 40 inches long
Element Surface Area	400 to 440 square feet
Element Manufacturer	Filmtec, Hydranautics, Toray
Minimum RO Permeate Back Pressure Assumed	15 pounds per square inch (psi)
Stage 1 Feed Pressure Range	120 to 180 psi
Boosting Device	HTC
Hydraulic Turbocharger Boost Available	42 to 64 psi
Design Temperature	20°C to 22°C
Average Flux	13.2 to 13.6 gfd

[A]Number of vessels depends on element surface area.

Each train will be a self-contained treatment unit arranged in an approximate 2:1 array configuration with an interstage HTC. Feed water will first be directed from the RO feed pump into Stage 1. The concentrate from Stage 1 will become the feedwater of Stage 2. The concentrate from the Stage 2 will be discharged into the brine pump station, from which it will be pumped into the Inland Empire Brine Line. RO permeate from Stage 1 and Stage 2 will be combined and flow into a permeate header and then to the decarbonator. A simplified schematic of the RO system is shown on Figure 3-2.

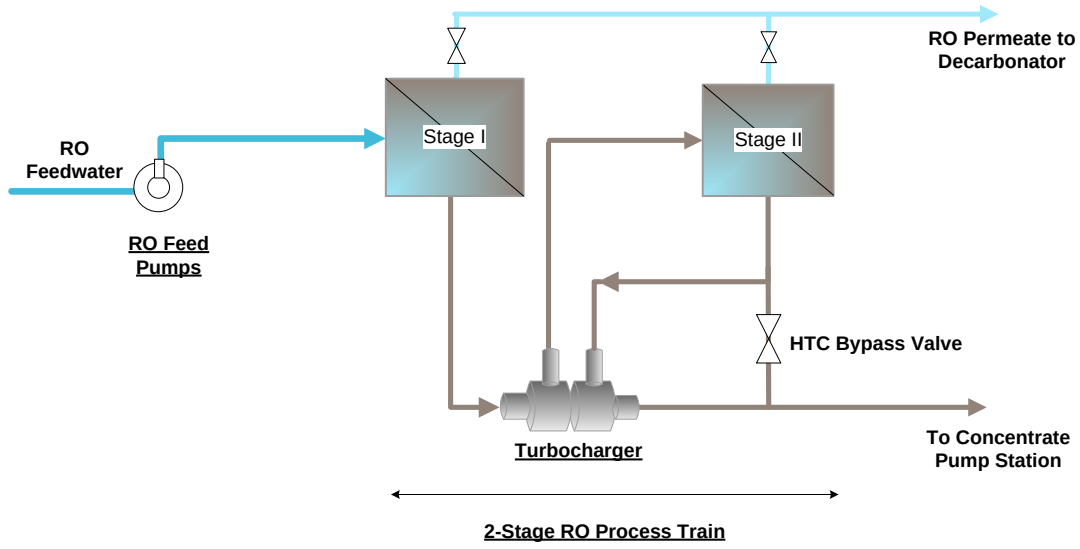

Figure 3-2 Process Flow Diagram for the RO System including Turbocharger

Each membrane train will include an automated valve set to fail in a closed position if power is lost. A magnetic flowmeter and automated flow control valve on the membrane concentrate piping will control the recovery to each membrane train. An automatic flow control valve and a flowmeter on Stage 1 permeate piping will be used to create additional permeate backpressure on Stage 1 in the event the HTC does not provide the described amount of flux balancing between stages.

Each RO train will have a third stage pre-fouling warning system. The pre-fouling warning will provide continuous feedback on RO performance and fouling nature. The system will consist of a 4-inch diameter pressure vessel that houses a single a 4-inch RO element, and online monitoring devises including flow meters, pressure indicators, and conductivity meters.

3.3.3 RO Membranes

The 2008 PDR evaluated various membrane elements for the RO system. This evaluation is valid for the current case. Membrane elements from four membrane manufacturers were considered, with each having a surface area between 400 and 440 square feet and classified in three categories—ultra low pressure, low pressure, and high salt rejection. A technical memorandum describing the evaluation process, as well as the recommended membrane elements, was submitted to EMWD by CH2M in January 2008 with the PDF II PDR.

The Koch membranes did not meet the selection criteria, whereas the FilmTec LE-440i, Hydranautics ESPA2+, and the Toray TMG20-430 showed the best permeate quality, required lowest feed pressure, least pressure boost needed for flux balancing, and highest potential for blending. The results of the membrane performance analysis are summarized in Table 3-5.

The lower range energy input shown in Table 3-5 indicates power consumption by a feed pump only when the interstage pressure boost for flux balancing is provided using an HTC. The higher range energy input includes the power consumption of an interstage booster pump with the feed pump. The blending ratio between 15 and 16 percent allows the membrane system to meet all specific water quality goals. However, total hardness in the finished water and other parameters such as LSI and calcium carbonate precipitation potential should be considered to determine the acceptable and permitted blending ratio. All three manufacturers have a significant market share in brackish water desalination and supply RO elements to clients in the United States and overseas. The membrane selection, therefore, should be based on bid cost and projected life cycle cost. Although not evaluated in the 2008 PDR, new membrane

elements manufactured by the listed three suppliers and from other suppliers may also be considered in this project.

3.3.4 Energy Recovery System

With the RO process, Stage 1 produces a greater flow of permeate than Stage 2 because it operates at lower feedwater salinity and higher feed pressure. A high permeate flow in Stage 1 can cause accelerated fouling of the membrane elements and individual element recoveries that exceed the membrane manufacturer's recommend value. In contrast, too low a Stage 2 flow can result increasing mineral precipitation (scaling), particularly in the trailing element. An imbalance in flow between the two stages can be alleviated by applying backpressure to the Stage 1 permeate stream. Applying permeate backpressure in Stage 1 wastes energy and increases membrane system feed pressure requirements. The preferred approach is to boost the pressure between the two stages. An interstage boost can be achieved either by using a pump to increase the pressure of the stage 2 feed (interstage boost pump [IBP]); or by using an energy recovery device (HTC or pressure exchanger) to transfer residual pressure energy in the Stage 2 concentrate to Stage 2 feed, resulting in a pressure boost to the Stage 2 feed. The main advantage to an energy recovery device is that it reduces the electrical energy consumption of the system because no additional power is required to achieve the Stage 2 feed pressure increase.

Table 3-5 Summary of Performance Results for Recommended RO Membrane Elements

Membrane Manufacturer	Membrane Element	Surface Area (square feet)	Average Flux (gfd)	Feed Pressure Range[1] (psi)	Maximum Required Pressure Boost (psi)	Total Energy Input Kilowatt Range[B]	Permeate Chloride [A] (mg/L)	Estimated Maximum Blending Ratio[C] (percent)	Blended (Permeate and Bypass) Hardness mg/L as $CaCO_3$
Dow (FilmTec)	LE-440i	440	13.2	140 to 160	54	100 to 113	27	16.0	210
Nitto Denko Hydranautics	ESPA2+	440	13.2	140 to 180	59	100 to 123	27	16.2	200
Toray Americas	TMG20-430	430	13.6	120 to 140	57	90 to 100	41	15.5	197

[A] Projected at 0 and 5 years when treating high-TDS feedwater.

[B] Total energy input range includes operation at 0 to 5 years using an HTC.

[C] The estimated maximum feedwater bypass blend ratio is based on meeting all primary and secondary drinking water standards (chloride is the limiting constituent).

Evaluation of candidate energy recovery devices for PDF II was conducted prior to preparation of the 2008 PDR. The results of this evaluation were documented in a technical memorandum, which was submitted to EMWD with the PDF II 2008 PDR. It describes the details of the evaluation and discusses each alternative. Based on this evaluation, HTC was selected as energy recovery system for the RO system at PDF II. Although, the cost of equipment and power/labor may have changed from the values used in 2008, HTC is still the most feasible energy recovery system and will be employed at PDF II.

HTC is a simple system that reduces feed pressure requirements and overall energy consumption, and improves flux balancing. HTCs were installed on the RO trains at the Perris I Desalination Facility and have operated reliably. The new HTC design to be used at PDF II will incorporate higher system efficiency and better process control, as well as improved operation based on EMWD and CH2M's better understanding of the feedwater quality, the outcome of the Perris I optimization project, and an improved well operation strategy. Optimal HTC efficiency is achieved when the TDS fluctuations are minimized. Therefore, optimization of the wellfield operation to manage variations in PDF II raw water TDS will be beneficial in maximizing operating efficiency of the HTCs.

3.3.5 RO CIP and Neutralization Systems

Chemical cleaning of the RO trains is required when membrane fouling or scaling occurs to a degree that a critical loss of performance occurs. Chemicals used for cleaning typically consist of organic or mineral acids and alkaline solutions consisting of simply dilute caustic or detergent/surfactant solutions sometimes containing chelating agents. The design criteria for the chemical cleaning (CIP) system are shown in Table 3-6.

Table 3-6 Preliminary Process Design Criteria for RO CIP System

Unit Process	Parameter Criteria
Tank	**1**
Diameter	10 feet
Shell Height	10 feet
Capacity	4,000 gallons
Tank Material	FRP
Number of Heaters	1 with center support
Heater Power	200 kilowatts
Accessories	Level indicator and transmitter, portable stairs
Pump	
Pump Type	Horizontal Centrifugal
Pump Material	316 SST
Number of Pumps	1
Pump Capacity	1,200 gpm
Pump TDH	150 feet
Flow for Stage 2 Cleaning	560 gpm
Motor Horsepower	75
Cartridge Filter	
Number of Filters	1
Flow Capacity per Filter	1,200 gpm
Housing Material and Type	316 SST Horizontal

Table 3-6 Preliminary Process Design Criteria for RO CIP System

Unit Process	Parameter Criteria
Element Size	2.5-inch nominal OD filter element, 40 inches long
Element Material	Polypropylene
Number of Elements per Filter Housing	86
Element Loading Rate (gpm/10-inch equivalent)	**3.5 gpm/10-inch equivalent**
Filter Size	**5 microns**

Chemical cleaning is anticipated to be required once every three to six months. The CIP system operation is manual and controlled from a local field panel near the cleaning pump with continuous instrumentation monitoring for tank level, pH, temperature, flow, pressure, and pump status.

Cleaning solution will be prepared in a 4,000-gallon FRP cleaning tank (CIP tank) and recirculated by the cleaning pump through the pressure vessels on the RO train. The CIP cleaning solution is mixed within the cleaning tank using RO permeate for dilution water. Liquid chemicals will be transferred to the CIP tank from the Chemical Storage area. If dry chemicals are used, they will be transferred from bags through the top of the cleaning tank. A platform adjacent to the tank will be provided for the addition of dry chemicals, if necessary. Liquid chemicals include 50 percent citric acid and 50 percent sodium hydroxide solutions, which will be used to make up 2 percent citric acid and 0.1 percent sodium hydroxide cleaning solutions, respectively. Care should be taken to ensure that the chemicals used are certified under ANSI/NSF Standard 60 for drinking water production, and do not contain oxidants or other substances harmful to the membranes. Care also should be taken to ensure a sanitary cleaning operation by maintaining a clean tank and feed systems, and by mixing sanitary quality cleaning solution. The chemicals are added after the dilution water is introduced into the CIP tank, and the cleaning recirculation pump is used to mix the chemicals prior to circulating the cleaning solution through the RO trains.

The cleaning solution is circulated at a low pressure of approximately 65 psi and a flow of 40 gpm per pressure vessel for 1 hour to clean each set of vessels. The first stage membranes require a total of 1,160 gpm[1]; and the second stage membranes require a minimum flow of 560 gpm[2]. The circulation pump is designed for a capacity of 1,200 gpm. The CIP pump is equipped with an AFD to provide the required flow range. The CIP tank is sized to allow 3 minutes of retention time at the cleaning flow rate (i.e., 3 minutes x 1,200 gpm = 3,600 gallons), plus an additional 2 feet of free board. A submerged immersion heater will be installed on the CIP tank and will be capable of raising the temperature of the cleaning solution from 25°C to approximately 40°C within 3 hours

The cleaning pipes are configured to allow the cleaning of either stage of the RO train. Valves are automated to direct the flow to selected stage within the RO train, and to direct the cleaning solution from the train back to the CIP tank. Most of the cleaning solution leaves the RO membranes on the concentrate side, due to the low pressures involved. Separate pipes are provided to collect the return cleaning solution from both permeate and concentrate sides of the membrane elements. The return piping is terminated near the bottom of the tank to reduce foaming. Once the cleaning solution is neutralized, it will be pumped to the concentrate pump station. The design criteria for RO CIP waste neutralization system are presented in Table 3-7.

1 Based on 29 vessels in stage 1.

2 Based on 14 vessels in stage 2.

Table 3-7 Preliminary Process Design Criteria for CIP Waste Neutralization System

Unit Process	Parameter Criteria
Tank	**1**
Diameter	14 feet
Shell Height	18 feet
Capacity	16,000 gallons
Tank Material	FRP- Double Wall
Accessories	Level indicator and transmitter
Pump	
Pump Type	Horizontal end suction
Pump Material	316 SST
Number of Pumps	1
Pump Capacity	1,100 gpm
Pump TDH	10 feet
Motor Horsepower	7.5
Motor Drive	AFD

After cleaning of each stage (or one stage if that is all that is required), the RO train is flushed to displace the residual cleaning solution before being placed back into service.

3.3.6 RO Flush System

The RO flush system uses the RO permeate for system flushing, including the system piping, that occurs during initial startup of an RO train to flush membrane preservative solution to waste, following system shutdown to remove the concentrate from the membranes and prevent scaling, and after a CIP cycle.

Isolation valves will be included on each membrane train to allow disposal of the off-specification RO permeate to one of the existing ponds at Sun City with an air gap. The design criteria for the RO flush system are shown in Table 3-8.

Table 3-8 Preliminary Process Design Criteria for RO Flush System

Unit Process	Parameter Criteria
Tank	**1**
Diameter	12 feet
Shell Height	18 feet
Capacity	12,500 gallons
Tank Material	FRP
Accessories	Level indicator and transmitter, ladder
Pump	
Pump Type	Horizontal end suction
Pump Material	316 SST
Number of Pumps	1
Pump Capacity	1,800 gpm

Table 3-8 Preliminary Process Design Criteria for RO Flush System

Unit Process	Parameter Criteria
Pump TDH	150 feet
Motor Horsepower	125
Motor Drive	AFD

During initial flushing, cartridge filtered water will be used to flush the concentrate out of the RO system and into the concentrate disposal line, where it will then be discharged into the concentrate pump station.

3.4 Post-Treatment

The purpose of post-treatment is to properly stabilize and disinfect the blended water (blend of RO permeate and bypass). Post-treatment will include RO permeate decarbonation, caustic addition for pH and alkalinity adjustment, chlorination (primary disinfectant) and chloramination (secondary disinfectant) for disinfection, corrosion inhibitor for corrosion control. Fluoride addition will take place following the post-treatment and prior to distribution. The following chemicals will be used in conjunction with post-treatment and fluoridation:

- Sodium hydroxide
- Sodium hypochlorite
- Corrosion inhibitor
- Liquid ammonia
- Hydrofluorosilicic acid

The following sections describe the post-treatment processes. Section 4 describes the chemical storage and feed facilities.

3.4.1 Decarbonation Systems

There will be two decarbonation systems:

1. Decarbonator to greatly strip CO_2 content of the RO permeate
2. Decarbonator to partially strip CO_2 content of Fe/Mn treated effluent

Decarbonation for RO Permeate Stream

Well water supplying PDF II contains elevated levels of bicarbonate and CO_2. This naturally elevated CO_2 results in high levels of CO_2 in both the RO permeate and blended water. To reduce CO_2, the RO permeate will be passed through a counter current, forced draft degasifer (decarbonator) where the CO_2 will be transferred from the liquid phase to the gas (air) phase. CO_2 removal increases the pH of the RO permeate, and therefore the blend, and minimizes the amount of caustic required to achieve the desired finished water LSI and alkalinity for corrosion control. Depending on levels of CO_2 and bicarbonate in the RO permeate streams, all or part of the RO permeate will be treated through the decarbonator. The decarbonator will be designed to remove more than 95 percent of the CO_2, with less than 10 mg/L remaining in the decarbonated permeate. Design criteria for the decarbonator system are listed in Table 3-9.

Table 3-9 Preliminary Process Design Criteria for Decarbonator System (RO Permeate)

Unit Process	Parameter Criteria
Decarbonator	
Treatment Capacity	3,125 gpm (4.5 mgd)
Number of Decarbonators	1
RO Permeate Bypass Flow	Bypass pipe sized to bypass 100 percent of flow
Influent Maximum CO_2 Concentration	160 mg/L
Influent pH	5.0 to 6.0
Decarbonator Tower Material	FRP
Decarbonator Diameter	12 feet
Decarbonator Height	25 feet
Number of Blowers	1
Blower Capacity	14,000 standard cubic feet per minute
Air to Water Ratio	30
CO_2 Removal Efficiency	> 95 percent
Blower Motor	15 horsepower

The decarbonator will be located outside the RO building. The decarbonator air blower with be located inside the RO building. The decarbonator will have a minimum of 11 feet packing depth to meet the CO_2 removal requirements. The packing material will consist of 2.5-inch-diameter, polypropylene material (MAS PAC FN-200 or equal).

3.3.1.1 Decarbonation for Fe/Mn Treated Effluent

Blends from Wells 76 and 81 have relatively low pH with high alkalinity and carbon dioxide concentration. There will be little change in these parameters for wells treated by an Fe/Mn removal facility. A combination of low pH and high CO2 substantially increases caustic doses for post treatment (pH adjustment for water stabilization). Increased caustic doses not only increases chemical usage, but also increases operation cost and TDS content of the finished water. Implementation of a decarbonator to treat Fe/Mn treated water will reduce chemical doses and TDS impact in finished water. Therefore, a decarbonator will be provided downstream of the existing Fe/Mn removal facility.

Depending on levels of CO_2 and bicarbonate in the Fe/Mn treated streams, all or part of the flow will be treated through the decarbonator. The decarbonator will be designed to achieve a partial CO_2 removal (up to 60 percent) to maintain a negative LSI value to minimize scaling on the decarbonator media. Design criteria for the decarbonator system are listed in Table 3-10.

Table 3-10 Preliminary Process Design Criteria for Decarbonator System (Fe/Mn Treated Effluent)

Unit Process	Parameter Criteria
Treatment Capacity	3,000 gpm (4.3 mgd)
Number of Decarbonators	1
RO Permeate Bypass Flow	Bypass pipe sized to bypass 100 percent of flow
Influent Maximum CO2 Concentration	320 mg/L
Influent pH	5.0 to 6.0
Decarbonator Tower Material	FRP

Table 3-10 Preliminary Process Design Criteria for Decarbonator System (Fe/Mn Treated Effluent)

Unit Process	Parameter Criteria
Decarbonator Diameter	12 feet
Decarbonator Height	22 feet
Number of Blowers	1
Blower Capacity	7,000 standard cubic feet per minute
Air to Water Ratio	30
CO_2 Removal Efficiency	Up to 60 percent
Blower Motor	7.5 horsepower

The decarbonator will be located outside the RO building. The decarbonator air blower with be located inside the RO building. The decarbonator will have a minimum of 10 feet packing depth to meet the CO_2 removal requirements. The packing material will consist of 2.5-inch-diameter, polypropylene material (MAS PAC FN-200 or equal).

3.4.2 Sodium Hydroxide

Following decarbonation, blended water will contain very little alkalinity and calcium with a pH that is lower than desired to minimize corrosion during finished water distribution as measured by its tendency to dissolve calcium carbonate and corrode concrete structures or metal piping). The RO permeate, therefore, must be conditioned prior to entering the Clearwell (chlorine contact tank). Two indices are commonly used to assess corrosivity or aggressiveness of water:

- LSI
- Aggressive Index (AI)

Neither index directly measures corrosivity, but instead provides a quantification of the tendency of a water to either dissolve or precipitate calcium carbonate. It is desirable for the finished water to have a $CaCO_3$ precipitation potential to form a protective $CaCO_3$ film on the structure or pipe wall to minimize corrosion. Therefore, a slightly positive LSI (+0.05 to +0.5) is desired as this equates to a tendency for $CaCO_3$ precipitation.

The AI, originally developed for monitoring the corrosivity of water toward asbestos cement pipe, is sometimes substituted for the LSI as an indicator of the corrosivity of water. The AI is derived from the actual pH, calcium hardness, and total alkalinity. Similar to the LSI, the AI is not a quantitative measure of corrosion, but is a general indicator of the tendency for corrosion to occur. An AI of 12 or above indicates nonaggressive (not corrosive) water. AI values below 10 indicate extremely aggressive (corrosive) conditions. Values of 10 to 11.9 suggest that the water is moderately aggressive.

To increase both the LSI and AI and reduce the corrosivity, sodium hydroxide (caustic) can be added to raise pH, LSI, and AI to make the finished water less aggressive.

3.4.3 Disinfection

Sodium hypochlorite is added to the blended water to create a free chlorine residual to achieve primary disinfection within the Clearwell. The CT within the Clearwell (T_{10}) will be calculated to provide a CT that meets the requirements of the Surface Water Treatment Rule. Disinfection contact credit under the Surface Water Treatment Rule is based on the effective contact time for the disinfectant being used, a value known as $T_{10.}$ This is defined as the detention time at which 90 percent of the water passing through a contact vessel is retained within the process hydraulic components (i.e. the time at which ten percent of the applied dosage is observed at the downstream sampling location). T_{10} can also be

considered the detention time equal to or exceeded by 90 percent of the fluid passing through the contactor. The Clearwell design is presented in Section 5.

Sodium hypochlorite will be dosed to the blended water directly downstream of the decarbonator; provisions for additional sodium hypochlorite injection as well as injection of aqueous ammonia, will be provided downstream of the Clearwell. Capability for chemical injections will be provided to the plant blended water downstream of the decarbonator for sodium hypochlorite and downstream of the Clearwell for sodium hypochlorite and aqueous ammonia. Sodium hypochlorite and aqueous ammonia storage and feed facilities are discussed in Section 4.

3.4.4 Corrosion Control

Given the anticipated variability in the alkalinity and CO2 of the plant raw water, it difficult to effectively control the corrosivity of the finished water through decarbonation and pH adjustment alone. To provide more robust control, a corrosion inhibitor feed system will be provided that can be used by the EMWD if needed. This will consist of a bulk storage tank and metering pumps for injection of a phosphate-based corrosion inhibitor. A blended ortho-poly phosphate blend chemical dosed to achieve a residual of 1 mg/L (as phosphate ion, [PO_4^{-3}]) is most typically employed for this purpose. Capability for corrosion inhibitor injection upstream of the Clearwell will be provided.

A corrosion inhibitor system of similar design was installed at the Perris I Desalter. To date, it has not been used because no corrosion in the chlorine tank has been reported by the operating staff. To prevent corrosion, coating the initial portion of the Clearwell is recommended as an alternative to using corrosion inhibitor.

3.4.5 Fluoridation

In the future, hydrofluorosilicic acid may be added to the finished water to provide a fluoride residual that reduces tooth decay. Currently, the target fluoride residual, according to California Regulations, is approximately 0.8 mg/L as fluoride ion. The blended water will contain fluoride in low concentrations (typically less than 0.25 mg/L) and supplemental addition may be required to meet 0.8 mg/L target as fluoride. If required, the target fluoride concentration will be met by adding hydrofluorosilicic acid to the finished water downstream of the Clearwell and after Sodium Hypochlorite (NaOCl) and Ammonium Sulfate addition.

SECTION 4

Chemical Storage and Feed Systems

4.1 Introduction

Table 4-1 lists the chemicals that will be used at PDF II and stored in bulk in the chemical storage area.

Table 4-1 List of Chemicals and their Application at PDF II

Chemical – Abbreviation	Bulk Solution Concentration (percent)	Point of Application
Sodium Hypochlorite	0.8	Pre-Fe/Mn removal facility, pre- and post-Clearwell, pre-decarbonator
TI	100	Pre-cartridge filter
Sulfuric Acid	93	Pre-cartridge filter
Citric Acid	50	For RO CIP cleaning
Sodium Hydroxide	50	Post-decarbonator, for RO CIP cleaning
Corrosion Inhibitor	100	Post-decarbonator
Ammonium Sulfate	40	Post-Clearwell
Hydrofluorosilicic Acid	25	Post-Clearwell

Individual secondary concrete containment will be provided for each bulk storage tank and associated chemical metering pumps. All storage tanks and pump containment areas will be designed with a minimum 3-foot clearance for the equipment access areas. The feed system for each chemical will be designed with one duty and one standby for each injection point. The following subsections discuss specific design criteria for the chemical storage and feed systems.

4.2 Chemical Feed Systems

4.2.1 Safety Design on Chemical Feed Systems

The chemical feed systems will be designed for operational flexibility, safety, and SCADA control. The bulk chemical storage will be sized for the future expansion of the RO facility to 4.5 mgd (permeate capacity). A day tank will be used for fluoride to prevent overfeeding.

Chemical metering pumps, located in the secondary containment storage area, will be fed directly from the bulk chemical tanks in the storage area. All chemical metering pumps will be located adjacent to the containment walls in a configuration that allows operators to adjust pump operation without the need to step inside the containment area. Local pump control panels, data communication panels, and conduits will be located to provide unimpeded access to the metering pumps. The chemical lines will be double contained for runs outside their own concrete containment. Chemical metering pumps will be started either automatically or manually by an operator, and will shut off automatically based on RO train ON/OFF operations or low levels in the storage tanks.

All chemical pumps and their accessories—including valves, pressure gauges, pulsation dampeners, and calibration columns—will be mounted on common skids. The pump skid will be installed inside the concrete containment wall, such that the operator can reach the pump and its accessories when standing outside of the containment. A sliding plexiglass shield, mounted on top of the concrete containment wall, will shield the operator from the pumps. This sliding plexiglass will provide safety to

personnel walking in the corridor between the chemical storage area and the RO Building. Operators are required to wear a safety face shield when performing calibration or maintenance on the metering pump. The operator must wear the safety face shield before he or she opens the safety sliding plexiglass.

Vents from chemical storage tanks must have a gooseneck to prevent wind from entering the pipe.

4.2.2 Onsite Sodium Hypochlorite Generation

To satisfy disinfection requirements for PDF II, onsite sodium hypochlorite generators will be installed to meet sodium hypochlorite demand for the Fe/Mn removal facility and disinfection at the Clearwell. The design criteria for the sodium hypochlorite generators, daily sodium hypochlorite dosage required, and associated metering pumps are presented in Table 4-2.

Table 4-2 Sodium Hypochlorite System Design Criteria

Unit Process	Parameter Criteria
Sodium Hypochlorite Generation System	
Required Chlorine Upstream of Clearwell	2 to 3 mg/L
Required Chlorine Downstream of Clearwell	1 mg/L
Daily Average Chlorine Usage at Clearwell	136 pounds per day (lb/day)
Daily Average Chlorine Usage Downstream of the Clearwell	54 lb/day
Total Daily Average Chlorine Usage	190 lb/day
Daily Average Salt Usage	570 lb/day
Salt Saturator Tank	
Tank Material	FRP
Tank Dimensions	8-foot diameter by 15-foot side wall height
Tank Capacity	23 tons
Minimum Days of Storage	30
Tank Accessories	Level indicator and transmitter
Hypochlorite Strength, Approximate	0.8 percent
Maximum Flow (Feed to Clearwell)	7.9 mgd
Minimum Flow (Feed to Clearwell)	2.2 mgd
Injection Rate Upstream of Clearwell	11 to 120 gallons per hour (gph)
Injection Rate Downstream of Fe/Mn Removal Facility	4 to 50 gph
Metering Pump Upstream of Clearwell	
Pump Type	Peristaltic
Pump Head Material	Polyvinylidene fluoride
Number of Pumps	2 (1 duty + 1 standby)
Pump Design Capacity	150 gph
Pump Design Discharge Pressure	120 psi
Motor	1 horsepower
Metering Pump Downstream of Clearwell	
Pump Type	Peristaltic
Pump Head Material	Polyvinylidene fluoride

Table 4-2 Sodium Hypochlorite System Design Criteria

Unit Process	Parameter Criteria
Number of Pumps	2 (1 duty + 1 standby)
Pump Design Capacity	100 gph
Pump Design Discharge Pressure	120 psi
Motor	1 horsepower, totally enclosed, fan-cooled (TEFC)
Storage Tank	
Tank Material	FRP
Tank Dimensions	12-foot diameter by 9.5-foot side wall height
Tank Capacity	7,000 gallons
Minimum Days of Storage	2
Tank Accessories	Level indicator and transmitter
Pipe and Valving Material	Polyvinyl chloride (PVC) carrier and secondary containment

An onsite sodium hypochlorite generation system applies electric current to concentrated brine solution to create sodium hypochlorite. The system uses high-purity, food-grade salt that is dissolved in a brine tank and fed to hypochlorite generators. The process waste product, hydrogen gas, is disposed of by venting to the atmosphere above the roof level. The average venting quantity of hydrogen gas from a 450 lb/day chlorine generator is 0.53 cubic feet per minute.

The onsite generation facilities consist of a salt saturator (storage/brine tank), generators, a hypochlorite solution tank, air blowers, water softeners, and metering pumps. Routine maintenance with cleaning of generator electrodes is required (once every few months).

EMWD finished water, instead of the RO permeate, will be used to create the brine feed, such that the generators can still operate when the RO trains are shut down. The finished water needs to be softened to minimize electrode scaling. Sodium-based ion exchange softeners will be specified as part of the system.

The generated sodium hypochlorite is stored in an FRP storage tank with a 7,000-gallon capacity. This capacity is sufficient for 2 days of consumption at maximum daily usage. The strength of the onsite generated sodium hypochlorite solution is approximately 0.8 percent chlorine by weight. The tank will be equipped with high and low level switches to control the generators on/off sequence. Concrete secondary containment for the day tank will be provided, although not required or regulated by the National Fire Code.

Two sets of metering pumps (two pumps per set – one duty plus one standby) will be provided for sodium hypochlorite injection. One set will be dedicated for injection upstream of the Clearwell; and one set will inject to the finished water line downstream of the Clearwell.

4.2.3 Sodium Bisulfite

The PDF II expansion does not requires construction of the additional Fe/Mn removal facility. In addition, the existing Fe/Mn facility, located at the Perris I and Menifee Desalter facilities, will continue to operate, but the treated effluent will no longer be treated through RO. The existing sodium bisulfite system capacity at the Perris I and Menifee Desalters is sufficient to quench chlorine downstream of the existing Fe/Mn removal facility, if needed.

4.2.4 Threshold Inhibitor

The TI will be an anionic co-polymer anti-foulant, or equal, and NSF-approved chemical for drinking water treatment. The design criteria for the TI storage and feed system are summarized in Table 4-3.

Table 4-3 Threshold Inhibitor System Design Criteria

Unit Process	Parameter Criteria
Dosage	2 to 5 mg/L
Maximum Flow	6.25 mgd (at 4.5 mgd RO permeate and minimum design recovery of 72 percent)
Minimum Flow	1.88 mgd (at 1.5 mgd RO permeate and maximum design recovery of 80 percent)
Injection Rate	0.1 to 1 gph
Concentration	100 percent
Application/Injection Point	Pre-cartridge filters
Metering Pumps	
Pump Type	Peristaltic
Pump Head Material	316 SST
Number of Pumps	2 (1 duty + 1 standby)
Pump Design Capacity	1.4 gph
Pump Design Discharge Pressure	120 psi
Motor	0.5 horsepower, TEFC
Discharge Flowmeter Type	Mass
Storage Tank	
Tank Material	FRP
Tank Dimensions	5-foot diameter by 7-foot 6-inch side wall height
Tank Capacity	1,000 gallons
Minimum Days of Storage	30
Tank Accessories	Level indicator and transmitter
Pipe and Valving Material	316 SST carrier and secondary containment

The TI will be delivered and stored onsite in a 1,000-gallon storage tank. Two metering pumps (one duty and one standby) used for injection will be flow-paced with manual dosage adjustment. The metering pumps will be peristaltic pumps per EMWD's preference. A mass flowmeter will be installed on the injection line to ensure TI is being injected to the RO feed line. Due to the low dosages required, the mass flowmeter specified must indicate real-time flow measurements.

An alarm with RO train shutdown will be activated if the flowmeter detects an insufficient or no-chemical flow.

4.2.5 Sulfuric Acid

As previously discussed in Section 3, the RO projections software showed that acid addition would not be required at PDF II based on projected LSI values (less than +2.0 for various the RO feed blends and up to 80 percent recovery). No need for feed water acidification has been further supported by the operational experience at the Perris I/Menifee Desalination Facilities indicating that carbonate scaling has not been an issue. However, raw water quality to PDF II may change over time and the

infrastructure (space in the Chemical Storage area) for adding acid storage and feed facilities will be provided in the event they may be needed in the future.

The design criteria for the future sulfuric acid storage and feed system are summarized in Table 4-4.

Table 4-4 Sulfuric Acid System Design Criteria

Unit Process	Parameter Criteria
Dosage	5-15 mg/L
Maximum Flow	6.25 mgd (at 4.5 mgd RO permeate and minimum design recovery of 72 percent)
Minimum Flow	1.88 mgd (at 1.5 mgd RO permeate and maximum design recovery of 80 percent)
Concentration	93 percent
Application/Injection Point	Pre-cartridge filters
Metering Pumps	
Pump Type	Peristaltic
Pump Head Material	Alloy 20
Number of Pumps	2 (1 duty + 1 standby)
Pump Design Capacity	4 gph
Pump Design Discharge Pressure	120 psi
Motor	1 horsepower, TEFC
Storage Tank	
Tank Material	Steel
Tank Dimensions	6-foot diameter by 7.5-foot side length
Tank Capacity	1,500 gallons
Minimum Days of Storage	30
Tank Accessories	Level indicator and transmitter, desiccant dryer
Pipe and Valving Material	Alloy 20 carrier and secondary containment

Space for a 1,500-gallon capacity storage tank will be designed with concrete containment to store 93 percent sulfuric acid. The space allocation design will include two chemical metering pumps, one duty and one standby to inject the acid into the RO feedwater. The metering pumps will be flow-paced, with feedback loop control based on pH. The sulfuric acid storage and feed system will be located within the chemical storage and feed area next to the RO process area in the RO building.

4.2.6 Citric Acid

Citric acid will be used with the CIP system for cleaning the RO trains. The system is sized based on the usage of approximately 150 gallons of citric acid per train per cleaning event. Assuming one CIP event every six months, the proposed 1,000-gallon tank will ensure a 1-year storage capacity. The design criteria for the citric acid storage and feed system are summarized in Table 4-5.

Table 4-5 Citric Acid System Design Criteria

Unit Process	Parameter Criteria
Concentration	50 percent
Application/Injection Point	RO CIP
Volume Needed per Train per Cleaning Event	150 gallons

Table 4-5 Citric Acid System Design Criteria

Unit Process	Parameter Criteria
Transfer Pump for CIP	
Pump Type	Horizontal end suction centrifugal
Pump Head Material	316 SST
Number of Pumps	2 (1 duty + 1 standby)
Pump Design Capacity	20 gpm
Pump TDH	25 feet
Motor	0.5 horsepower, TEFC
Storage Tank	
Tank Material	FRP
Tank Dimensions	5-foot diameter by 7.5-foot side wall height
Tank Capacity	1,000 gallons
Tank Accessories	Level indicator and transmitter
Pipe and Valving Material	316 SST carrier and secondary containment

Citric acid with 50 percent strength will be stored in a 1,000-gallon tank. There will be two transfer pumps (one duty and one standby) delivering the acid to the CIP tank. The CIP procedure is described in Section 3.

4.2.7 Sodium Hydroxide

The sodium hydroxide feed system will be used to stabilize the blended water through pH, alkalinity, and LSI adjustment. It will also be used infrequently to prepare alkaline CIP solution for cleaning of the RO trains. The design criteria for the sodium hydroxide system are presented in Table 4-6.

Table 4-6 Sodium Hydroxide System Design Criteria

Unit Process	Parameter Criteria
Dosage	25 to 56 mg/L
Maximum Flow for Post Treatment	7.9 mgd
Minimum Flow for Post Treatment	2.2 mgd
Injection Rate	3.5 to 30 gph
Concentration	50 percent
Application/Injection Point	Post-decarbonator/pre-Clearwell, RO CIP
Metering Pumps	
Pump Type	Peristaltic
Pump Head Material	316 SST
Number of Pumps	2 (1 duty + 1 standby)
Pump Design Capacity	50 gph
Pump Design Discharge Pressure	120 psi
Motor	0.5 horsepower, TEFC
Transfer Pump for RO CIP	

Table 4-6 Sodium Hydroxide System Design Criteria

Unit Process	Parameter Criteria
Pump Type	Horizontal end suction centrifugal
Pump Head Material	316 SST
Number of Pumps	2 (1 duty + 1 standby)
Pump Design Capacity	4 gpm
Pump TDH	25 feet
Motor	0.5 horsepower, TEFC
Storage Tank	
Tank Material	FRP
Tank Dimensions	9-foot diameter by 14-foot side wall height
Tank Capacity	6,300 gallons
Minimum Days of Storage	21
Tank Accessories	Level indicator and transmitter, insulation
Pipe and Valving Material	316 SST carrier and secondary containment

To meet the finished water pH at PDF II, a predicted dose of up to 56 mg/L of 100 percent sodium hydroxide will be needed to maintain a slightly positive LSI (+0.05) in finished water. At this target LSI, pH and alkalinity of the finished water will be 7.8-8.3 and 80-150 mg/L as $CaCO_3$, respectively. This maximum sodium hydroxide dose is based on conditioning 7.9 mgd flow, a blend of 4.5 mgd RO permeate and up to 3.4 mgd bypass water; equivalent to 75 percent bypass.

The minimum sodium hydroxide demand (25 mg/L of 100 percent solution) is based on conditioning a blend of 1.5 mgd RO permeate (one RO train of PDF II online) and approximately 0.7 mgd bypass flow (equivalent to 45 percent bypass).

A 6,300-gallon insulated storage tank will be used to store the 50 percent sodium hydroxide solution. The stored chemical will meet the demand for finished water conditioning and membrane CIP. Two metering pumps, one duty and one standby will feed downstream of the decarbonator. Two transfer pumps (one duty and one standby) will transfer sodium hydroxide solution to the CIP tank.

4.2.8 Corrosion Inhibitor

If necessary, proprietary corrosion inhibitors or orthophosphate will be added to the water to increase the buffering capacity and provide 1 mg/L of PO_4^{3-}. The design criteria for the corrosion inhibitor system are listed in Table 4-7.

Table 4-7 Corrosion Inhibitor System Design Criteria

Unit Process	Parameter Criteria
Dosage	4 mg/L (1 mg/L as PO_4^{3-})
Maximum Flow	7.9 mgd
Minimum Flow	2.2 mgd
Injection Rate	0.5 to 0.9 gph
Concentration	100 percent
Application/ Injection Point	Post decarbonator upstream of Clearwell

Table 4-7 Corrosion Inhibitor System Design Criteria

Unit Process	Parameter Criteria
Metering Pumps	
Pump Type	Peristaltic
Pump Head Material	316 SST
Number of Pumps	2 (1 duty + 1 standby)
Pump Design Capacity	2 gph
Pump Design Discharge Pressure	120 psi
Motor	0.5 horsepower, TEFC
Storage Tank	
Tank Material	FRP
Tank Dimensions	5-foot diameter by 7.5-foot side wall height
Tank Capacity	1,000 gallons
Minimum Days of Storage at Average Flows and Chemical Doses	30
Tank Accessories	Level indicator and transmitter
Pipe and Valving Material	316 SST carrier and secondary containment

4.2.9 Ammonium Sulfate

Assuming a chlorine-to-ammonia ratio of 4.5, the ammonium dosage will range between 0.4 and 0.7 mg/L. The design criteria for the ammonium sulfate feed system are shown in Table 4-8.

Table 4-8 Ammonium Sulfate System Design Criteria

Unit Process	Parameter Criteria
Ammonium Dosage	0.4 to 0.7 mg/L
Maximum Flow (Finished Water)	7.9 mgd
Minimum Flow (Finished Water)	2.2 mgd
Injection Rate	0.3 to 2.2 gph
Concentration	40 percent
Application/ Injection Point	Post Clearwell finished water
Metering Pumps	
Pump Type	Peristaltic
Pump Head Material	316 SST
Number of Pumps	2 (1 duty + 1 standby)
Pump Design Capacity	4 gph
Pump Design Discharge Pressure	150 psi
Motor	0.5 horsepower, TEFC
Storage Tank	
Tank Material	FRP
Tank Dimensions	5-foot diameter by 7.5-foot side wall height

Table 4-8 Ammonium Sulfate System Design Criteria

Unit Process	Parameter Criteria
Tank Capacity	1,000 gallons
Minimum Days of Storage at Average Flows and Chemical Doses	30
Tank Accessories	Level indicator and transmitter, chiller, insulation
Pipe and Valving Material	316 SST carrier and secondary containment

A 1000-gallon FRP tank will be designed for ammonium sulfate bulk storage. An ammonium sulfate solution concentration of approximately 40 percent will be stored. Usage this solution concentration would avoid the risk management/inventory requirements by regulations... Two metering pumps (one duty and one standby) will provide ammonium sulfate to the finished water line.

4.2.10 Hydrofluorosilicic Acid (Fluoride)

The infrastructure for the future fluoride storage and feed system will be included in the design. The space allocation for this system is based on an optimal dose of fluoride ion of 0.8 mg/L. Fluoride in the form of hydrofluorosilicic acid will be added to the finished water downstream of the Clearwell prior to the distribution system. The design criteria for the fluoride system are shown in Table 4-9.

Table 4-9 Hydrofluorosilicic Acid (Fluoride) System Design Criteria

Unit Process	Parameter Criteria
Dosage	0.8 mg/L as fluoride ion or 1 mg/L as hydrofluorosilicic acid
Maximum Flow	7.9 mgd
Minimum Flow	2.2 mgd
Injection Rate	0.2 to 1.1 gph
Concentration	25 percent
Application/Injection Point	Post Clearwell finished water
Metering Pumps	
Pump Type	Peristaltic
Pump Head Material	316 SST
Number of Pumps	2 (1 duty + 1 standby)
Pump Design Capacity	2 gph
Pump Design Discharge Pressure	150 psi
Motor	0.5 horsepower, TEFC
Transfer Pump	
Pump Type	Horizontal end suction centrifugal
Pump Head Material	316 SST
Number of Pumps	2 (1 duty + 1 standby)
Pump Design Capacity	5 gpm
Pump TDH	10 feet
Motor	0.25 horsepower, TEFC

Table 4-9 Hydrofluorosilicic Acid (Fluoride) System Design Criteria

Unit Process	Parameter Criteria
Storage Tank	
Tank Material	FRP - Double wall
Tank Dimensions	5-foot diameter by 7.5-foot side wall height
Tank Capacity	1,000 gallons
Minimum Days of Storage	30
Tank Accessories	Level indicator and transmitter
Day Tank	
Tank Material	Polyethylene
Tank Dimensions	2-foot diameter by 3-foot straight shell height
Tank Capacity	35 gallons
Minimum Days of Storage	1
Tank Accessories	Level indicator, scale
Pipe and Valving Material	316 SST

The space for the fluoride feed system is based on a 1,000-gallon storage tank and a 35-gallon day tank. Per EMWD, the future fluoride storage tank will be a double-walled tank, contained within a concrete containment area. The two metering pumps (one duty and one standby) feeding the finished water line will be peristaltic pumps per EMWD's request. The 35-gallon day tank will be on a scale for control.

SECTION 5

Clearwell and Finished Water Pump Station

5.1 Introduction

The DDW is requiring EMWD to provide 4-log virus inactivation of the blend water containing RO permeate and bypass flows. To satisfy this requirement, free chlorine disinfection in the Clearwell will be designed to meet the 4-log virus inactivation. The Clearwell also will serve as a wet well for finished water pumps. Using vertical turbine pumps, the disinfected water will be discharged to the EMWD distribution system.

5.2 Clearwell and CT Requirements

The Clearwell is a below grade, concrete structure that will receive up to 7.9 mgd of blended water flow. To minimize short-circuiting, baffles will be installed in the Clearwell. The Clearwell will be designed to provide disinfection by free chlorine and achieve a minimum CT of 4.0 milligrams per minute per liter (mg-min/L). Because the Clearwell will also serve as a wet well for finished water pumps, a minimum water depth of 8 feet will be required. Based on the CT of 4.0 and the required water depth, the Clearwell will only require three passes. However, to ensure adequate hydraulic detention time, the Clearwell will be designed to consist of five 5-foot-wide chlorine contact channels (passes), each 38 feet long. Only the first four passes are considered to be effective passes since the end channel will be adjacent to the finished water pump wet well. The extra pass provides a degree of conservatism relative to CT.

With a side water depth of 8 feet, the volume provided by the four passes is approximately 45,400 gallons. Using a conservative baffling factor of 0.5 and a residual chlorine concentration of 1 mg/L will yield a CT value of 4.2, which will be sufficient to meet the minimum CT requirement of 4 mg-min/L. With a tracer testing, a better baffling factor (i.e., 0.6-0.8) may be demonstrated and obtained which may further reduce the chlorine dose applied. To prevent chlorine residual dissipation due to sunlight (ultraviolet light), the Clearwell will be covered with a concrete roof slab. Covering of the wet well also will prevent introduction of dust and foreign matter to the disinfected water. Other features of the wet well are vents and a sump at the low point on the bottom to facilitate tank drainage. The design criteria for the Clearwell are presented in Table 5-1.

Table 5-1 Clearwell System Design Criteria

Unit Process	Parameter Criteria
Disinfection	
Basis for Sizing	Achieve 4-log virus inactivation using free chlorine
Disinfection CT Required	4.0 mg-min/L
Minimum Water Temperature	15°C
pH	6 to 9
Design Flow	7.9 mgd
Design Baffling Factor (BF)	0.5
Clearwell Chlorine Contact Volume (Baffled)	45,500 gal
Overall Clearwell Dimensions	41 feet long x 32 feet wide
Side Water Depth	8 feet
Channel (Pass) Length	38 feet

Table 5-1 Clearwell System Design Criteria

Unit Process	Parameter Criteria
Channel (Pass) Width	5 feet
Number of Effective Passes	4
Length to Width Ratio	30
Design Free Chlorine Residual	01.0mg/L
Clearwell CT at a BF of 0.5	4.2

5.2.1 CT Calculation

For regulatory purposes, the adequacy of disinfection, as measured by CT is judged using the product of the final residual concentration of disinfectant (C in mg/L) and the CT in minutes). In the case of free chlorine, the required CT to achieve 4-log virus inactivation is dependent on both water temperature and pH. A CT value of 4 mg-min/L must be met based on the EPA Guidance Manual for Disinfection Profiling at 15°C and a pH between 6 to 9. Based on water temperature records at the Perris I Desalter for the past 12 months, 15°C is considered the lowest temperature of the water. To achieve this CT requirement in the Clearwell with four effective passes, free chlorine residual of approximately 1.0 mg/L will be maintained at the end of the Clearwell flow channel prior to entering the fifth channel adjacent to the finished water wet well.

Table 5-2 presents a summary of the CT calculations used to size the disinfection portion of the Clearwell. Additional CT is provided in the pipeline between the chlorine injection location and the Clearwell, ensuring a safety factor on the CT provided versus that required.

5.2.2 Chloramination

Secondary disinfection of the finished water as it is pumped into the distribution system will be provided by chloramines. Ammonium sulfate will be dosed at the main discharge header of the finished water pumps to convert residual free chlorine to combined chlorine. The use of chloramines will ensure a stable chlorine residual throughout the distribution system while minimizing the formation of disinfection byproducts. A provision is included to add chlorine prior to ammonium sulfate addition.

Table 5-2 Clearwell CT Calculations

Parameter	Requirements and Given Conditions
Virus Inactivation Requirement	4 log
Minimum Water Temperature	15°C
pH range	6 to 9
Residual Free Chlorine at end of Clearwell Contact	1 mg/L
Required CT_A	4.0 mg-min/L
Minimum Contact Time (T10) at a BF of 0.5	4.2 minutes
Baffling Factor $(T10/T)_B$	0.5
Theoretical Detention Time (T)	8.4 minutes
Design Flow	7.9 mgd
Bulk Contact Volume	45,400 gallons

[a] CT value is 4.0 per EPA Guidance Manual for Disinfection Profiling.
[b] Conservative baffling factor - Well baffles Clearwell with length to width ratio approaching 40 usually yields a BF of between 0.6 and 0.8.

5.3 Finished Water Pump Station

The finished water pump station consists of a below grade concrete wet well structure that is hydraulically connected to the Clearwell. Located adjacent to the end channel of the Clearwell, the finished water pump station receives disinfected water from the Clearwell. The wet well will be equipped with access hatches for maintenance and instrumentation for level control.

From the finished water pump station, treated water is pumped to the EMWD distribution network through a common discharge header. For this purpose, the finished water pump station will be furnished with three vertical turbine pumps in lead/lag/standby configuration. Provisions will be made for the addition of a fourth pump for plant expansion to three RO membrane trains in the future. Each pump will be sized for 1,850 gpm of flow at approximately 245 feet of TDH to handle the total finished water flow of approximately 3,650 gpm (5.25 mgd) for the initial phase and 5,470 gpm (7.9 mgd) for the ultimate phase. The pumps will be equipped with AFDs to maintain the level in the finished water pump station wet well. The design criteria for the finished water pumps are presented in Table 5-3.

Table 5-3 Finished Water Pump Station Design Criteria

Unit Process	**Parameter Criteria**	
Finished Water Pump Station	Initial Phase	Ultimate Phase
Design Flow	3,650 gpm	5,470 gpm
Number of Pumps	3 (2 duty + 1 standby)	4 (3 duty + 1 standby)
Pump Type	Vertical turbine	
Pump Material	316 SST	
Pump Capacity	1,850 gpm	
Pump Total Dynamic Head	245 feet	
Minimum Pump Efficiency	80 percent	
Motor Horsepower	150	
Motor Drive	AFD	

SECTION 6

Concentrate Pump Station and Concentrate Disposal

6.1 Introduction

The RO concentrate, commonly known as brine, from the RO membrane trains will be collected by a common pipe header and conveyed to the existing Brine Pump Station at the Perris I and Menifee Desalters. The RO concentrate will continue to be pumped from this brine pump station to the Temescal Valley Regional Interceptor for disposal. The pumps in the existing Brine Pump Station will need to be modified to handle the additional brine flow from the PDF II. The design criteria and the features for these modifications are described in detail below.

6.2 Existing Brine Pump Station Modifications

The existing brine pump station currently receives brine from the existing Perris I and Menifee Desalters and from the delivery trucks that dispose brine from outside facilities. It consists of a concrete wet well with a storage capacity of 34,000 gallons, and three vertical turbine pumps (two duty and one standby) each with a capacity of 1,250 gpm at 167 feet TDH. Flows from each of the existing Desalters enter the wet well via an air gap to comply with DDW's requirements. The flow from the brine disposal trucks enters the wet well through the quick coupling connection on the north side of the wet well.

Similarly to the existing Desalters, the flows to the brine pump station from the PDF II will include the brine from the RO units, RO membrane train flushing water, neutralized CIP solution, and drains from the process and chemical storage facilities. The brine from the RO units will be a steady flow to the existing brine pump station, while the other waste streams will occur in irregular frequency and are a smaller volume when compared to the brine flow. As a result, the additional design brine flow to the existing Brine Pump Station will be based on the RO concentrate from the PDR II:

- 820 gpm of brine for the initial Phase I (two RO trains)
- 1,250 gpm of brine flow for the ultimate Phase I (three RO trains)

The three existing pumps will need to be replaced with three new pumps with larger flow capacity. As stated before, each of the existing pumps has a capacity of 1250 gpm and two operate at any given time, so the flow capacity for each of the new brine pumps is estimated to be approximately 1,900 gpm ([2 x 1250 gpm + 1250 gpm]/3).

Other modifications to the existing brine pump station include the addition of an air gap to receive the brine flow from the new PDF II and replacement of the existing discharge piping to handle the higher flow. The air gap is required by DDW to prevent any potential cross-contamination of the treatment plant. The existing dividing walls between pumps do not need modifications.

The existing brine wet well provides approximately 9 minutes of retention time at 3,800 gpm of brine flow.

The pumps proposed to replace the existing brine pumps are also vertical turbine pumps with Duplex SST components for corrosion resistance. The new pumps will also be designed with AFDs to maintain the existing control system based on the level in the pump station wet well in combination with level instruments. Two pumps will continue to be duty and one will be the standby. The new AFDs will be located in the existing electrical room that supplies the existing brine pumps. In this existing electrical room there is space to add one more AFD, but this space along with the space being used by

the existing AFD units for the brine pumps will be used to install the new larger AFDs (125 hp instead of the existing 100 hp AFDs.)

Table 6-1 summarizes the design features for the modifications to the existing Brine Pump Station at the Perris I and Menifee Desalters that are required to handle the flows from PDF II for disposing brine to the Temescal Valley Regional Interceptor.

Table 6-1 Brine Pump Station Modifications Design Criteria

Unit Process	Parameter Criteria
Concentrate Pump Station	Phase I, Final
Design Flow	1,900 gpm
Number of Pumps	3 (2 duty + 1 standby)
Existing Wet Well Size	20 feet long x 20 feet wide x 16 feet deep
Air Gap	Yes
Pump Type	Vertical turbine
Pump Material	2205 SST
Pump Capacity	1,900 gpm each
Pump Total Dynamic Head	185 feet
Minimum Pump Efficiency	80 percent
Motor Horsepower	125
Motor Drive	AFD

SECTION 7

Civil and Site Layout

7.1 Introduction

The primary functions of the PDF II are to control salinity in the San Jacinto Basin and to provide a supplemental water supply system to meet the increasing demand within the EMWD geographical jurisdiction. Phase I of PDF II is designed to provide 4.5 mgd of RO permeate (3.0 mgd of RO permeate will be produced through two RO trains, expandable to 4.5 mgd when third train is added). In addition, EMWD is also considering implementing IPR by producing up to 15,000 acre-feet per year (13.5 mgd) of purified water to supplement potable water supplies. The Menifee site is one of the potential sites for IPR water purification facilities. The PDF II site layout, presented in Figure 7-1 presents the Phase I as well as potential future expansion.

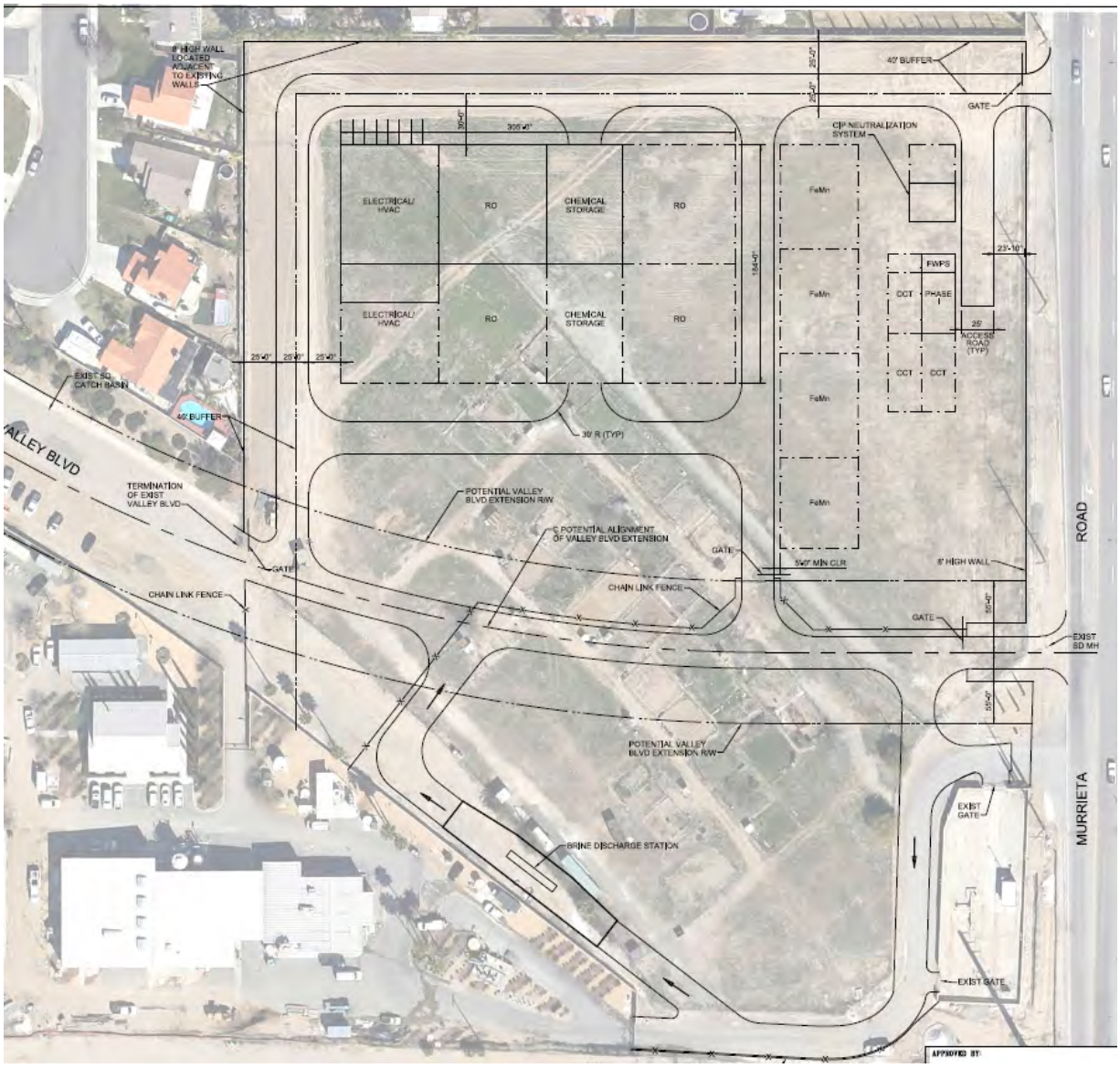

Figure 7-1 PDF II Site Layout

The site layout and Phase I facilities and site features presented in Figure 7-1 will consist of the following:

- Access roads and gates to ensure easy egress and ingress of vehicles, especially for chemical delivery and brine disposal purposes (trucks up to 65 feet long)
- Grading, drainage, access roads, parking, and drought tolerant landscaping. Recycled water will be used for landscape irrigation
- A stand-alone wall along the perimeter of the site and security gates
- Storm water collection and conveyance sized to collect site runoff flow to existing storm drains
- RO buildings
- Clearwell and Finished Water Pump Station
- CIP Neutralization Tank

7.2 Project Site

PDF II is located north of the existing Menifee and Perris I Desalters in the City of Menifee, Riverside County, California. The site is a portion of the Northeast Quarter of Section 32, Township 5 South, Range 3 West, San Bernardino Baseline and Meridian, in the City of Menifee, County of Riverside. Figure 7-1 shows the site layout.

The site is bounded by Murrieta Road on the east, the end of Valley Boulevard to the west, existing housing development on the north and northwest, and the existing PDF I facility to the south. It is anticipated that the expansion of Valley Boulevard may extend and traverse the PDF II property and connect to Murrieta Road. The existing wall and fence along the property boundaries are the approximate limits of the property.

The site is currently flat with no existing structures or facilities. EMWD has an existing facility and existing access road/entrance located on the southeast corner of the property. Tanker trucks utilize this access road to access the existing brine station inside the EMWD Perris I facility. The existing ground surface topography is relatively flat with a less than 1 percent slope toward the southeast.

7.3 Topographic Mapping/Surveying

The topographic map for PDF II is based on an aerial photography originally performed on June 18, 2014 and updated on May 29, 2015. The basis of bearings for the survey is the California coordinate system, Zone VI, NAD83 (EPOCH 2011.00) as determined locally by a line between continuous operating reference stations. Bill and PPBF being N20-23-41.07W as derived from geodetic values published by the California spatial reference center and/or National Geodetic Survey, respectively.

- BILL: N2154995.055 E6313564.086
- PPBF: N2248987.118 E6278618.571

The coordinate system used for the base mapping is a scaled to ground coordinate system that was determined by holding grid coordinate of N2197962.940 and E6270348.197 fixed as a ground coordinate at a local site control point and applying a scale factor.

The existing topographic map shown in Appendix E was prepared by RBF Consulting and will be used as the base topography for the design. Existing elevations of the surface area where the PDF II will be located range between approximately 1,414 and 1,409, with the lowest elevation near the southeastern boundary.

7.4 Federal Emergency Management Agency Flood Zone

A significant portion of the proposed PDF II is located within a mapped floodplain (Appendix E). The Federal Emergency Management Agency (FEMA) as part of the National Flood Insurance Program (NFIP) regulates mapped floodplains. The City of Menifee is a participating community in the NFIP and is the local floodplain administrator. FEMA develops Flood Insurance Rate Maps (FIRMs) that delineate lands that are at risk of being inundated by the base flood, a flood event that has a 1-percent-annual-chance of being equaled or exceeded in any given year. These at risk lands are designated Special Flood Hazard Areas.

The latest FIRM for the City of Menifee available on the FEMA website is dated August 18, 2014. According to this FIRM (Map No. 06065C2055H), the proposed PDF II site is located in the flood zone of the Special Flood Hazard Area, outside of the floodway (The floodway is comprised of the channel and adjacent overbank areas necessary to effectively convey floodwaters. The flood fringe consists of lands outside the floodway that are at or below the base flood elevation (BFE) that stores, but does not effectively convey, floodwaters). As shown in the FIRM dated August 18, 2014 (Appendix E), the 100-year BFE has been determined at the PDF II site as 1,409 feet as per the National Geodetic Vertical Datum of 1929. Based on the current topography, PDF II exceeds this elevation. To be removed from the Special Flood Hazard Area, the topographic map and proposed PDF II boundary will be included in a Letter of Determination Review (LODR) for submittal to FEMA to resolve the elevation discrepancy. In general, PDF II structures will be elevated with fill and founded on a graded pad that will be greater than 1,409 feet, and at least 1 foot above the BFE. In addition, the existing road adjacent and north of PDF I will be raised to meet BFE.

When the project is complete, the Owner needs to apply to FEMA for a LODR. Once the LODR is received, it should be submitted to the City for record.

7.5 Site Layout Design Criteria

The City of Menifee has established design criteria for development projects within its boundaries. The PDF II shall dedicate property for street right-of-way for the potential Valley Boulevard extension to Murrieta Road. Additional footage for utilities, curb, gutter, sidewalks, streetlights, and street paving is allocated in the street right of way. The site layout and roads have incorporated the Valley Boulevard alignment and allowed adequate setbacks and encroachment. PDF II will be situated on the northern portion of the property. The southern portion will include a separate brine discharge station.

The project site will be surrounded by an 8-foot-high concrete block wall with three access gates. A 40-foot buffer for buildings and PDF II facilities will be established along the adjacent residential properties to minimize any noise or visual impact from the facility. In addition, a row of trees will line the adjacent walls along the residential properties. The facility will consist of a pre-engineered building to house the RO and chemical storage, electrical and HVAC services, bathrooms and workshop. Ancillary facilities including clean in place neutralization system, FWPS, chlorine contact tank and a brine discharge station will be provided. The RO building will have approximately seven parking spaces with one disabled parking spot adjacent to the building. Curb ramps compliant with the American Disability Act will be constructed to provide access to the buildings. There will be a 6-inch curb separating the interior roads and the gravel areas around the equipment pads. The entrance and exit ramps will have a maximum slope of 6 percent. There will also be an 18-foot wide pad on the west side of the RO building for electrical equipment.

Roads within the limits of the PDF II site are at least 25 feet wide with 50 feet turning radiuses to accommodate chemical delivery trucks that are up to 65 feet long and emergency support vehicles. There will be three 25-foot wide ingress/egress locations with secure gates. The primary entrance will be from Murrieta Road. The roads and gates are shown on Figure 7-1.

The ground will be sloped at 5 percent for a distance of 10 feet from all buildings. Paved areas will be sloped at a minimum 1 percent and drain to inlets constructed at low points on building and/or equipment pads. Storm drains will convey the surface runoff to existing storm drains.

7.6 Brine Discharge Station

A new brine discharge station will be located north of the existing Perris I and Menifee Desalters. The station will be equipped with spill containment to prevent unauthorized discharges and contain any potential spills during brine discharge. The internal chain link fence and gate are being used to prevent the trucks accessing the new brine discharge station from entering the treatment process areas in the existing and new desalters. The trucks accessing the brine discharge station will share the main access from Murrieta Road, but will follow a dedicated path to the brine discharge station. The new brine discharge station will be equipped with a flowmeter and a pH analyzer to monitor and record the amount and quality of the brine discharged at this facility. A pipe will connect the brine discharge station to the existing Brine Pump Station Wet Well at the Perris I and Menifee Desalter. This pipe should be installed, so that it enters the wet well at its bottom to minimize foaming. The new brine discharge station also be equipped to contain up to 10,000 gallons of liquid should a spill occur from the brine disposal trucks. The spill containment will be equipped with a shutoff valve to allow approved stormwater discharge.

7.7 Roadways/Access

All site interior access roads will be Portland Cement Concrete, Asphalt Cement pavement, and decomposed granite. Concrete curb and gutter will be constructed in certain areas to enhance collection and conveyance of stormwater. Parking areas and concrete landings will be provided. Wheelstops will be provided for parking stalls. Striping will be required for parking stalls and entry/exit gates.

The existing access along Murrieta Road will be relocated to the north to establish a new entrance along the potential Valley Boulevard alignment. Access from Murrieta Road to the existing EMWD site will be maintained to continue providing access to the existing facility. The Valley Boulevard extension will potentially be a local road with a total 110-foot-wide right-of-way to accommodate utilities, curb, gutter, sidewalks, streetlights, and street paving. Development of PDF II will accommodate the future extension of the roadway allowing for only road and access improvements within the right of way.

An additional road will connect to the existing road to provide access to the new brine discharge station to allow brine delivery trucks discharge to the Brine Pump Station without the need to enter the Perris I Desalter site (Figure 7-1). The new and existing road will be graded and a new pavement section will be built on top of it. The new pavement width will be 25-feet wide, with concrete headers and gravel shoulders.

The design vehicle for the PDF II access road, intersection and returns is a WB-65, equating to a chemical delivery truck. Radii of 55-feet at returns will be placed along the chemical delivery route, which is the perimeter of the site and will also accommodate emergency vehicles.

The main access to PDF II will be on Murrieta Road near the center of the site and the emergency site entrance will be located north of the main access gate. Additional secondary access gate will be provided on the west side of the site (where Valley Boulevard currently terminates) and adjacent to the current Perris I and Menifee Desalter plant access.

The roadway section will consist of an asphalt concrete over aggregate base. This roadway section will be designed for H-20 loading and the estimated number of chemical and maintenance truck deliveries for a 20-year design life. Final pavement design and pavement sections will be confirmed during final design.

Pavement markings, including parking, crosswalks and stop bars and traffic signing will follow the Manual of Uniform Traffic Control Devices. Guardrails, wheelstops and bollards will be provided as required.

7.8 Site Security and Fencing

No existing fencing will be reused. Security walls around the site will consist of 8-foot concrete walls. Within the site, there will also be a chain link fence from the existing Perris I and Menifee Desalters to the north side of the main access gate on Murrieta Road to prevent the brine discharge haulers from accessing the process treatment areas at the existing and new Desalters. The main access gate on Murrieta Road and the access gate on Valley Boulevard will be automatic sliding gates with Knox boxes for the Fire Department. The emergency access gate will be double swing gates with a lock. The access gate on the internal chain link fence will be a sliding gate and will allow access to the PDF II. See Figure 7-1 for the location of the access gates.

7.9 Grading and Drainage

The site-grading concept is to maintain existing general slopes from northeast to southwest. The mound in the south middle of the site will be excavated to provide uniform grades within the plant site and excess material will be disposed offsite or re-used onsite as fill as needed.

Finish grades will vary across the site. The northeast entrance of the site will be graded to match the existing roadway. The southwest entrance of the site will be graded to match the existing roadway at that location. In general, the site will slope east to west to minimize extensive fill placement and promote stormwater flow to existing drainage systems. Finish floor elevations and equipment pad elevations will vary to be above the 100-year flood elevation.

Access roads will have a minimum 2 percent cross-slope and minimum 0.50 percent longitudinal slope. Storm drainage design will follow the following criteria:

- County of Riverside Standard Drawings and Specifications or the Greenbook, if criteria are not defined in either of these sources, refer to Caltrans guidelines.
- County of Riverside rational method, min 10-year frequency. Isohyetal maps found in NOAA Atlas 2, Precipitation-Frequency Atlas of the Western United States, Volume XI-California.
- Keep storm drainage internal to PDF II in accordance with Regional Water Board general permit requirements.
- Drain potentially contaminated areas (chemical containment or brine discharge) to sanitary sewer.
- PDF II will be designed to sheet flow toward onsite conveyance systems that will eventually drain to an existing stormdrain. Onsite conveyance systems (swales, ditches, inlets, etc.) will be sized to collect and convey runoff from a 100-year 24-hour storm event. Drainage calculations will be performed per the Riverside County Hydrology Manual. The Rational Method will be used to calculate peak flows and a simplified hydrograph was constructed to determine flow volume from a 100-year 24- hour storm event. The tributary area for the drainage study is limited to the area within property boundary due to its relatively flat surface and the building pad due to the elevated pad site.

7.10 Erosion Control

Standard erosion control measures are required. These measures will include sediment fences at the toe of new slopes and stockpiles and downhill of disturbed areas. Fiber rolls and check dams will be used to control runoff of existing surfaces after clearing and grubbing. Temporary erosion control grasses and

straw mulch will be applied to ground surfaces exposed during the wet season. Plastic sheet covering may also be used on erodible stockpiles and other disturbed areas where vegetation cannot be established in a timely manner. All other necessary erosion control measures will be included to meet regulatory requirements and those of the project-approved SWPPP.

7.10.1 Fire Protection Requirements

PDF II will be required to have Fire Marshall approval of the fire access plan per the Riverside County Fire Code. All interior access roads will be sized to accommodate emergency response vehicles. A minimum 25-foot road width and 50-foot turning radius will be used in the design criteria. The access gates will have a minimum 50-foot clearance and Knox boxes will be located outside the gates. A separate fire water line will serve the facility and all hydrants. Hydrants will be located a minimum of 300 feet apart per the Riverside County Fire Code Ordinance 787. Each building with occupancy requirements will have a fire department connection and a post indicator valve.

7.10.2 Sewer Force Main

There is an existing 30-inch sewer force main along the northern and western property limits. Setback from the sewer force main has been included in the 40-foot setback along the north and west property boundary to provide access (Figure 7-1).

7.11 Landscaping

Landscaping will be provided at plant entrances and along the property boundary adjacent to the wall on the north and west. New landscaping in this area will consist of drought tolerant native vegetation and trees. Local drought tolerant native plant species will be selected.

The limit of landscape work is determined by existing boundaries, such as pavement edges and fences. Landscape limit of work will be approved by EMWD.

Irrigation water will be non-potable, recycled water. The irrigation system for the landscaped areas will be valved per exposure and plant evapotranspiration requirements.

SECTION 8

Architectural, Structural, and Building Mechanical Systems and Design Criteria

The following section outlines the criteria for architectural design, structural codes, systems and materials, HVAC systems, plumbing systems, and fire protection.

8.1 Architectural Design Criteria

8.1.1 Codes and Standards

- 2013 California Building Code (CBC) - Title 24 Part 2
  - Accessibility: Chapter 11 of CBC
- 2013 California Fire Code (CFC) - Title 24 Part 9
- 2013 California Energy Code (CEC) - Title 24 Part 6
- 2013 California Green Building Standards Code (CGBSC) – Title 24 Part 11
- State of California Occupational Safety and Health Administration (Cal-OSHA) General Industry Safety Orders

8.1.2 Building Code Analysis

Building codes for the RO Building and Finished Water Pump Station are shown below. More detailed code analyses can be found in Appendixes F and G.

RO Building

- Code Analysis:
  - Occupancy Use: Mixed
    - Provide space for process equipment, chemical storage, and mechanical and electrical support spaces. Additionally provide space for maintenance shop, control and SCADA rooms.
  - Occupancy Separation:
    - F-2 to H-3/H-4 = 2 hour (with automatic sprinkler system)
    - F-2 to H-2 = 3 hour (with automatic sprinkler system)
    - H-2 to H-3/H-4 = 1 hour (with automatic sprinkler system)
  - Construction Type: IIB (Sprinkled at chemical storage - required)
- Allowable Area, Height, and Number of Stories:
  - At F-2: 23,000 square feet, 55 feet, and 3 stories
  - At H-2: 7,000 square feet, 55 feet, and 1 story
  - At H-3: 14,000 square feet, 55 feet, and 2 stories
  - At H-4: 17,500 square feet, 55 feet, and 3 stories
- Hazardous Materials, Concentration, and Stored Amount:
  - Sodium hypochlorite (0.8 percent) 7,000 gallons; irritant
  - Sulfuric acid (93 percent) 1,500 gallons; water reactive, corrosive, toxic

- TI (100 percent) 1,000 gallons
- Sodium hydroxide (50 percent) 7,000 gallons; corrosive
- Citric acid (50 percent) 1,000 gallons; irritant
- Ortho-poly phosphate or corrosion inhibitor (100 percent) 1,000 gallons; corrosive
- Ammonium Sulfate (40 percent) 1,000 gallons; corrosive
- Hydrofluorosilicic acid (25 percent) 1,000 gallons; corrosive

Finished Water Pump Station

- Code Analysis:
  - Occupancy Use: F-2
  - Provide space for mechanical and electrical equipment.
  - Occupancy Separation: Not applicable
  - Construction Type: IIB (non-sprinkled)
  - Allowable Area, Height, and Number of Stories, at B: 23,000 square feet, 55 feet, and 3 stories

8.2 Structural Codes, Systems, and Materials

Design criteria will include building codes, design loadings, foundation criteria, material types and properties, references, and other special requirements. Structural concepts include project facility building systems and design principles for watertight concrete structures.

8.2.1 Structural Design Criteria

Code

- 2013 CBC as amended by local agencies
- United Facilities Criteria 3-310-04, Seismic Design for Buildings.

Design Loads

- Roof Live Loads:
  - RO Building: 20 pounds per square foot (psf)
  - Finished Water Pump Station (FWPS) Buildings: 20 psf
- Roof Dead Loads:
  - CCT:
    - Actual concrete slab dead load
  - RO Building and FWPS Buildings:
    - Actual prefabricated metal building roof frame 5 psf
    - Collateral (includes mechanical piping, lights, etc.) 15 psf

Note: Operating weight of any roof-mounted equipment is to be added to the above Dead Loads

- Floor Live Loads:
  - Process areas in all facilities and buildings 200 psf
  - Walkways, platforms, and stairways 100 psf
  - Catwalks 50 psf
- Seismic Parameters
  - Occupancy Category III (Table 1604.5)
  - Soil Site Class D (Geotechnical Report)

  - Mapped Site Spectral Responses:
    - Ss=1.50 g
    - S1=0.60 g
  - Design Site Spectral Responses:
    - SDS=1.00 g
    - SD1=0.60 g
  - Seismic Design Category D
  - Importance Factor = 1.25
- Wind Parameters
  - 90 miles per hour, 3-second gust
  - Exposure C
  - Importance Factor = 1.15

8.2.2 Foundation Criteria

CH2M Geotechnical Investigation and Recommendations for Perris Desalter in Perris, California, dated January 2002, and an addendum dated November 2002.

- Lateral Earth Pressures
  - Active 40 pounds per cubic foot (pcf) (Drained)
  - At-Rest 60 pcf (Drained)
  - Passive 360 pcf (Drained)
  - Active 87 pcf (Undrained)
  - At-Rest 100 (Undrained)
- Soil Friction Factor against Sliding 0.35
- Allowable Bearing Pressure (1/3 increase to this permitted when using wind or seismic loads per CBC, Section 1612) 2,500 psf
  - Soil Unit Weight 120 pcf
  - Groundwater: Approximately 25 feet below existing/proposed grade. Flotation is not a design consideration for any of the structures in this facility.

8.2.3 Materials

- Concrete – Minimum 28 day compressive strength = 4,000 psi
- Reinforcing Steel ASTM A615, Grade 60 Fy = 60 ksi
- Steel
  - W-shapes Fy = 50 ksi
  - Plates, angles, shapes except W (including channels) Fy = 36 ksi
  - Square or rectangular steel tubing Fy = 46 ksi
- Masonry = 1,500 psi

(Testing of units and special inspection is required to use full value. Without testing and special inspection f'm = 750 psi)

- Bolts
  - High-strength bolts A325N
  - Machine or anchor bolts A307

  - Stainless steel A193, Type 316

- Aluminum = Alloy 6061-T6
- Stainless Steel = Type 316, Fy = 25 ksi

8.2.4 Guidelines

- CH2M Structural Design Guide.
- American Concrete Institute (ACI). ACI 350, Design of Sanitary Structures, Latest Edition; and ACI 318, Building Code Requirements for Reinforced Concrete, Latest Edition.
- American Institute of Steel Construction. Manual of Steel Construction, Latest Edition.

8.2.5 Water-Holding Structures

Reinforced concrete water-holding structures will be designed for strength, watertightness, and durability. Watertightness will be achieved by controlling cracking and by specifying a mix design that will produce dense concrete with minimal shrinkage. Serviceability requirements will be in accordance with ACI 350, Environmental Engineering Structures; ACI 318, Building Code for Reinforced Concrete; and CH2M Standards for Water-Holding-Basin Design.

The major concrete water-holding structure is the CCT.

Chlorine Contact Tank

This is a buried reinforced concrete structure with an approximate footprint of 30 feet by 40 feet and a depth of 15 feet. The CCT is a water-holding basin for chlorine contact. Structural design cases include the structure empty with soil backfill applied and no soil backfill with the structure full of liquid during the leak testing procedures.

8.2.6 Non-Water-Holding Structures

RO Building

The footprint of this building is 92 feet by 218 feet. It will house the RO system and has electrical and mechanical rooms, a shop area and chemical storage. It also has an area to house exterior tanks. This facility will utilize a pre-engineered metal building framing system with main rigid frames that span in the north to south, spaced such that the support columns within the frames will be embedded within non-bearing interior partition walls. The interior wall between the RO Process and Chemical Storage Rooms will be full height CMU block to act as an occupancy separation wall between these two areas. The CMU wall will support the secondary roof-framing members that span in the east/west direction. The foundation system will be concrete slab-on-grade with footings located under the mainframe columns and CMU bearing wall. The slab will have equipment foundations, containment areas, and a concrete trench to house chemical feed lines and storage tanks. Refer to the architectural section for interior and exterior architectural concepts.

Finished Water Pump Station

The footprint of this building is approximately 19 feet by 42 feet and it is oriented on the site crossways on the CCT facility. It will be supported partially on the cast-in-place concrete roof of the CCT facility and partially as a concrete slab-on-grade structure. Both the steel framing system and the exterior envelope appearance will be the same as the RO Building.

8.2.7 Deliverables

Drawings

Where possible, present drawings as follows:

1. Foundation Plan
2. Roof Framing Plan
3. Elevations
4. Wall Sections
5. Details

Standard Details

Standard details will dictate uniform concepts and philosophies used in the design. Typical standard details include but are not limited to the following:

- Arrangement of and method of detailing the horizontal reinforcing in concrete walls
- Framing member and footing schedules, format, and typical sections and bar designations
- Standard structural notes, abbreviations, lap splice/bend length tables, etc.
- Joint details
- Structural steel connections
- Fabricated metal details
- Typical reinforcing at openings
- Other details that provide for uniformity and that affect structural design

Calculations

A registered Civil or Structural Engineer, currently licensed in the State of California, will stamp and sign calculations.

8.3 HVAC Systems

8.3.1 Design Criteria

Design criteria, general descriptions of the systems proposed for each building, and the proposed control strategy are presented. Process rooms will be ventilated to relieve heat buildup from process equipment during hot weather periods.

8.3.2 Codes

The HVAC systems design will be based on the following codes:

- 2013 CBC (2012 International Building Code with California Amendments)
- 2013 California Mechanical Code (2012 Uniform Mechanical Code with California Amendments)
- 2013 California Plumbing Code (2012 Uniform Plumbing Code with California Amendments)
- 2013 CFC (2012 International Fire Code with California Amendments)
- 2013 California Energy Code

8.3.3 Outdoor Design Conditions

The following outside air design criteria will be used for the design (from American Society of Heating, Refrigerating, and Air-Conditioning Engineers, Inc. weather data for the nearby March Air Force Base).

Summer: 0.4 percent temperature: 100.2°F (Dry Bulb), 67°F (Wet Bulb)
Outdoor condensing unit sized and rated for 115°F to ensure proper operation during summer conditions

Winter: 99.6 percent temperature: 32.1°F (Dry Bulb), and a 5-year minimum of 24.8°F used for sizing freeze protection in the maintenance shop and mechanical room.

8.3.4 Indoor Design Conditions

Table 8-1 Indoor Design Conditions

Building Area Description	Winter Design Dry Bulb Temperature	Summer Design Dry Bulb Temperature
RO Building - RO Process Equipment Room, and Chemical Storage	No heat	104°F
RO Building – Maintenance shop, Mechanical Room,	40°F	104°F
RO Building - Electrical Room	No heat	85°F
RO Building - Control Room and Toilet Room	70°F	77°F

8.3.5 Building Pressurization

HVAC systems will be designed to control building pressurization as follows:

- The door opening force will not exceed 15 pounds. For a 3-foot by 7-foot door, this results in a differential pressure limit of 0.14 inch water column across each door.
- Positive building pressure will be maintained in all air-conditioned rooms. The positive pressurization will help control migration of unconditioned air from the adjoining rooms and will help control infiltration of outside air into these parts of the buildings.
- The chemical storage room will be continuously exhausted and under negative pressure.
- The other non-air-conditioned rooms will be under positive pressure when their heat removal ventilation fans are on. These rooms will be under neutral pressure when their fans are off.

8.3.6 Ductwork

General supply and exhaust air ductwork will be constructed of galvanized steel, with the following exceptions; supply and exhaust ductwork in the chemical room and exhaust ductwork from the toilet/shower rooms will be aluminum.

8.3.7 RO and Chemical Storage/Feed Building Systems

The control, visitor viewing, and toilet rooms will be provided with heating and air conditioning for human comfort. The heating will cycle on when space temperature drops below 70°F (adjustable). For heating and cooling, a split, heat pump, air conditioning system will be provided, having an outdoor air-cooled condenser for heat collection and rejection and an indoor air-handling unit for supplying heating and cooling air to the rooms. The cooling will cycle on when space temperature exceeds 77°F (adjustable). An exhaust fan in the toilet room will run continuously when the indoor air-handling unit is on.

The electrical room will be provided with air conditioning to maintain conditions required by the equipment. Heat generated by electrical equipment, located in this room, will be removed by an air conditioning system. The air conditioning will cycle on when space temperature exceeds 85°F (adjustable).

The reverse osmosis equipment room, maintenance shop, and chemical storage room will be provided with ventilation to remove heat from the space. Heat generated by mechanical and electrical equipment, located in the room, will be removed by a fan-powered ventilation system using filtered outside air. The heat-removal fans will cycle on when space temperature exceeds 80°F (adjustable).

8.3.8 HVAC System Controls

HVAC systems will be operated through digital control systems. The HVAC control panel will be located in the HVAC equipment room or other appropriate location. The panel will be provided with ON/OFF or ON/OFF/AUTO switches for each fan unit, as is needed for each unit. HVAC equipment that requires thermostatic control will be provided with local control in the room served. Exhaust fans will be interlocked with their related supply unit to ensure that proper space pressurization is maintained. Outside air intake and exhaust openings in the building envelope will be provided with dampers to control airflow. Where motorized dampers are used, electric operators will be provided. These operators will be interlocked with the associated fan to operate as required by the active fan mode.

Chemical Storage room will be provided with emergency ventilation shutdown switches and equipment monitoring as required by the CA Fire Code.

8.4 Plumbing Systems

8.4.1 General Scope

The plumbing system design for the building will include potable cold water, non-potable cold water, potable hot water, sanitary drain and vents, and storm drain. The following codes and standards, as applicable, will be incorporated into each building plumbing design:

- State of California 2013 Plumbing Specialty Code Amendments to the Uniform Plumbing Code, 2012 Edition
- American Society of Plumbing Engineers Standards
- ANSI

8.4.2 Design Criteria

Sanitary Sewer System

Plumbing fixtures will be gravity drained. The discharge will be piped to a site sewer main.

Barrier-Free Plumbing Fixtures

Plumbing fixtures suitable for use by the physically impaired will be provided where required. The project architect will determine the location and number of barrier-free plumbing fixtures.

Energy-Conservation Concepts

- Water-conserving plumbing fixtures and trim as required by the California Plumbing Code
- Energy-efficient water heaters
- Insulated hot water piping

Cross-Connection Control

Reduced-pressure principle backflow preventers will be provided as required by the California Plumbing Code and, as a minimum, for the following water systems:

- Cold water service to mechanical/process equipment
- Connection between potable water and non-potable water

8.4.3 Building Plumbing Systems

- Potable cold-water (W1) serving building plumbing fixtures.
- Non-potable cold-water serving process and equipment.
- Potable hot water serving building plumbing fixtures.

- Process sample lines (various flow streams)
- Storm drain serving all roofed structures.
- Sanitary drain and vent serving building plumbing fixtures and floor drains.

8.5 Fire Protection

8.5.1 General Scope

A minimum of one fire hydrant will be located at the site for firefighting protection. A water service line of sufficient size, capacity and pressure required to meet hydraulic design conditions to be determined during detailed design will supply the fire hydrant(s) and building sprinkler riser(s). The water service line is expected to be supplied from the water treatment plant site. Either fire flow testing or hydraulic modeling as performed by EMWD will be used as the basis for fire flow availability on the site. If flow and/or pressure is insufficient for fire protection, a fire pump system may be required.

The chemical storage portions of the RO building will have automatic wet-pipe type fire sprinkler system. The fire sprinkler system will be designed in accordance with the National Fire Protection Association (NFPA) 13, Standard for the Installation of Sprinkler Systems, authorities having jurisdiction, and EMWD's insurance underwriter. Insurance provisions must be made known early in the detailed design phase and provided by EMWD to CH2M. Fire sprinkler systems will be provided under a performance specification, with design and installation by qualified fire sprinkler system designer and contractor.

The following codes and standards, as applicable, will be incorporated into building fire protection design:

- International Fire Code, 2012 Edition
- CFC, 2013 Edition, including Appendix B & C for fire hydrant flow, quantity and spacing
- NFPA Standards, Latest Edition

The location of the required fire department sprinkler system connection and site fire hydrant are typically subject to review and approval by the local fire authority having jurisdiction. Performance specifications will allow the contractor to use NFPA 13 approved steel pipe systems for the sprinkler system within the building.

SECTION 9

Architectural Building Concepts and Miscellaneous Structures

9.1 Introduction

The architectural design concept for the PDF II is to provide functional buildings that present an image of quality and good design, using durable, low maintenance, and corrosion-resistant materials. The design of the new buildings and structures will present a cohesive and coordinated architectural image that fits within the context of the site.

9.2 Exterior Architectural Theme

The PDF II will be located to the north of the existing Perris I Desalination Facility. Closely spaced existing residences border the north and west of the new facility site. To the east is Murrietta Road and additional existing residences. In an effort to be sensitive to the view shed of the adjacent neighbors, the facility will be designed to minimize the industrial nature of its appearance and to provide a visually pleasing facility acceptable to the surrounding neighborhood stakeholders.

The RO Building and Finished Water Pump Station will be designed with architectural treatment intended to reflect the image of a contemporary commercial architectural development. Architectural treatment will include decorative parapets, grilles, CMU veneer wainscot, and sunshades that utilize a palate of earth tone color. Additionally, screen walls and landscaping will be located to impede line of sight to exterior equipment from the adjacent residences. The height of new buildings will be kept as low as reasonably practical while still meeting functional requirements. Openings along the north and west sides of the building will be minimized to reduce potential light and noise sources toward the neighbors.

9.2.1 Selection Process

The selected exterior architectural theme was based on evaluation of four building elevation and colorization studies and three building section studies. These studies were developed to explore differing architectural exterior wall treatment, color, and building profile (Refer to Appendices H, I and J). EMWD initially selected Elevation Studies A and B, Colorization Study B, and Section Study B during a project workshop on June 2, 2015. Extensive colorization of Elevation Studies A and B (refer to Appendix K). EMWD selected Elevation Study B as the selected architectural theme to present to the neighborhood stakeholders.

9.3 Buildings

9.3.1 Reverse Osmosis Building

The RO Building will be one-story and approximately 90 feet wide by 218 feet long. The structural wall and roof system will consist of pre-engineered metal rigid frames with purlins and girts. The main rigid frames will have a mono-slope shape with the highpoint on the south side of the building (refer to Appendix K, Section Study B).

Exterior wall cladding will consist primarily of insulated metal wall panels over metal girts. Additional wall cladding accent features will also be included, refer to building elevation drawings. A heat reflective

single-ply roofing membrane will be installed over rigid insulation that is mechanically fastened to a structural metal deck on metal purlins.

All interior surfaces, exposed to view, will be painted in light colors to enhance the lighting inside the building. Skylights will be provided for vertical turbine pump removal and daylighting in appropriate spaces.

Building Program

The following spaces will be included in the building:

- **RO Process Mechanical Room:** This room will provide space for the RO membrane equipment and associated pumps, piping, and support tanks. Three single doors and two overhead coiling doors will be provided for access to the exterior and three interior single doors for ease of access within the building.
- **Control Room:** Will house a control console, associated equipment, and storage shelving. Two single doors will provide access. It will be located close to the Maintenance Shop and RO Process Mechanical Room.
- **Server Room:** Will house SCADA and other communications equipment. A single interior door is provided for access. It will be located directly adjacent to Control Room.
- **Electrical Room:** Will house the electrical equipment for the plant. A pair of doors and two single doors will provider egress and equipment access.
- **UniSex Restrooms:** Two handicapped accessible unisex restrooms will be provided. Each will house one toilet, one lavatory, and toilet room accessories as appropriate. A single interior door will provide access.
- **Visitor Viewing:** This space will allow for public access to a central viewing area that is protected from the industrial spaces. A drinking fountain will be included in the space. The interior partition walls will be glazed for enhanced viewing of process equipment and control functions. It will be located directly adjacent to restrooms.
- **Mechanical Room:** Will house the HVAC equipment, hot water tank, and fire sprinkler riser. A pair of doors will be provided for access. Two interior single doors will also be provided for ease of access within the building. Louvers will be located on south wall of room.
- **Maintenance Shop:** This room will provide space for equipment laydown, operator team meetings, workbenches, lockers, critical spare parts storage cabinets and racks, flamable liquid cabinet, and a compressor. A mop sink, mop and broom holder, and shelving for janitorial supplies will also be provided. An overhead coiling door and a single door will be provided for access from the exterior. Two interior single doors will also provide ease of access within the building.
- **Chemical Storage, Room No. 1:** This room will provide space for the chemical storage tanks, pumps, piping, safety shower/eye wash, blowers, etc. This space will include a truck drive through aisle with overhead doors on the north and south sides of the space for chemical filling and tank ingress/egress. This space will have an automatic fire sprinkler system and fire rated interior walls.
- **Chemical Storage, Room No. 2:** This room will provide space for a future sulfuric acid storage tank, pumps, piping and safety shower/eye wash. A pair of doors from the interior and a single door to the exterior will be provided for access. This space will have an automatic fire sprinkler system and fire-rated interior walls.

9.3.2 Finished Water Pump Station

The Finished Water Pump Station will be an enclosed building that is one-story and approximately 30 feet wide by 40 feet long. The structural wall and roof system will consist of pre-engineered metal building frames with purlins and girts. Exterior wall cladding will consist primarily of insulated metal wall panels over metal girts and will match the RO Building. A heat reflective single-ply roofing membrane will be installed over rigid insulation that is mechanically fastened to the metal deck. All interior surfaces exposed to view will be painted in light colors to enhance the lighting inside the building.

Building Program

The following spaces will be included in the building:

- **Pump Room:** This room will provide space for the finished water pumps and associated analyzer equipment
- **Electrical Room:** This room will provide space for electrical equipment

9.4 Accessibility

The plant site and buildings will be designed to meet the requirements of CBC, Chapter 11. An accessible route will be provided from an accessible parking area to the main public entrance of the RO Building. Within the building, the accessible route will be limited to the Visitor Viewing, Control Room and restrooms. The remainder of the RO Building and Finished Water Pump Station are not required to be accessible.

9.5 Public Tours

Bi-monthly guided tours of the facility will provide an educational overview of the water treatment process. An orientation of the water treatment process at the Perris I and II facilities will mark the start of public tours at the Perris I Desalter RO Building. A canopy will mark the visitor entry at the PDF II RO Building. A viewing area inside the building will be provided adjacent to RO Process Mechanical Room, Control Room, restrooms and drinking fountain. The interior partition walls will be glazed to allow viewing of process and control equipment from the viewing area. A public tour route through the process room(s) is not planned at this time.

9.6 Sanitary Requirements (Plumbing Fixtures)

The current RO Building restroom plan will satisfy sanitary requirements (plumbing fixtures) for both new buildings.

9.7 Exterior Building Components and Treatment

Roof:	Single-ply roofing membrane. Color: White.
Coping:	Prefabricated and contoured aluminum with polyvinylidene fluoride finish. Color: Dark Bronze.
Walls:	Insulated metal wall panels with textured finish and split-face CMU wainscot. Colors: Light and dark brown.
Doors:	Painted and insulated hollow metal. Aluminum storefront system with polyvinylidene fluoride finish at main entry to building. Where used, glazing will be insulated and laminated safety glass. Color: Blue.

Door Hardware:	Mortise locksets with lever handles and satin stainless steel finish. Panic exit devices as required/appropriate.
Overhead Coiling Doors:	Insulated aluminum with polyvinylidene fluoride factory finish. Operation to be motorized. Color: Dark Bronze.
Guard posts:	Concrete filled steel with painted finish. Provide at doorjambs of overhead doors.
Louvers:	Aluminum with polyvinylidene fluoride finish and drainable blade louvers. Color: Dark Bronze.
Grilles:	Aluminum with polyvinylidene fluoride finish. Color: Dark Bronze.
Canopies:	Aluminum with polyvinylidene fluoride finish. Color: Dark Bronze.
Roof Hatches and Skylights:	Aluminum with polyvinylidene fluoride finish and insulated. Color: Match roofing.
Skylights:	Translucent panel with aluminum frame. Crystal/White translucent face sheets and polyvinylidene fluoride finish on frame.
Signage:	Buildings will have exterior wall mounted signs; selected exterior doors will have door signs; hazardous material signs provided as required by code. Site directional, wayfinding and entrance monument signage as required

SECTION 10

Instrumental and Control System

10.1 Introduction

This section presents the instrumentation and control design concepts for PDF II. It addresses the proposed SCADA system architecture, support systems, and monitoring and control concepts. This information will be used in the development of the final design documents including P&IDs, instrument installation details, specifications including input/output (I/O) and equipment lists and system testing documentation. The SCADA block diagram is a representation of the major components, their network links, communication protocols, media types, and power supplies for the plant control and monitoring systems.

10.1.1 Assumptions

- Administrative network will be configured in coordination with EMWD. CH2M will coordinate with EMWD regarding specifications for installation of Administration Open Rack, UPS, switch and Computers.
- PLC and HMI application development software will be coordinated with EMWD during the final design phase. CH2M will assist EMWD to perform Functional Testing of Loops and Programming together during Commissioning phase of the Project.

10.1.2 Open Items

- The Facility Identifier D0010 has recently been provided by EMWD for tagging purposes.
- The open Administrative rack is to be installed for future Voice over Internet Protocol (VoIP).
- Location of the RO PLC, control room versus the electrical room.

10.2 SCADA System

The major components of the SCADA system include a fiber optic interface to the existing system servers, one SCADA HMI workstation for operator access to the entire SCADA system, a laptop computer with Rockwell Studio5000 PLC application development software, and the PLC network featuring device level rings over Ethernet IP.

10.2.1 System Servers

EMWD has installed new SCADA servers at the existing facilities running OASyS SCADA HMI development and runtime software. An open rack assembly will be provided for the SCADA network switches and fiber management panels. An open rack assembly will also be provided for the administrative system switches and future VoIP hardware. Each rack assembly will be provided with two dedicated 20-amp alternating current (AC) circuits and outlets.

10.2.2 Human-Machine Interface

Monitoring and control functions will be performed remotely through the SCADA system HMI workstations and laptop computers. A local HMI workstation (thin client at PDFII) will be provided with display monitor(s), keyboard, and mouse. Two laptop HMIs will be provided for remote access to the SCADA system by O&M personnel. A third maintenance laptop will be provided with a Studio5000 full development license to modify control algorithms.

A Kingfisher remote telemetry unit cabinet with a radio will be proposed to allow PDF II to communicate with remote sites.

10.2.3 Programmable Logic Controller Network

Automatic and manual controls for most equipment will be implemented in local control panels (LCPs) utilizing PLCs provided by an instrumentation subcontractor or as part of standard package control systems furnished by equipment venders. Vendor PLCs will be provided for the sodium hypochlorite generation system.

The RO PLC will utilize the Allen-Bradley L71 ControlLogix processor. The ControlLogix platform will be Allen-Bradley's latest offering and is currently being utilized at the Perris Water Treatment Plant. The ControlLogix platform offers certain advantages over the previously utilized end of life small logic controller (SLC) 4 and 5 platforms in that it eliminates block transfer read and write messages that are cumbersome, provides greater data throughput and faster PLC scan times, and provides transparent processor redundancy and symbolic addressing.

The RO PLC LCP will utilize redundant processors, power supplies, and communication modules. This PLC will be located in the RO building control room. The vendors will be required to provide PLCs based on the standard Allen Bradley Logix family of processors established for the project so that the hardware can be easily incorporated into the SCADA system. These PLCs are in LCPs located adjacent to their respective processes.

The PLCs will be provided with I/O to communicate with field hardware. The RO PLC will be provided with remote I/O cabinets located in the RO and chemical process areas for monitoring and control of the process field devices. The RO PLC will communicate with a remote I/O cabinet located inside the electrical room of the Finished Water Pump Station.

A Prosoft or Fieldserver serial communication card will be installed in the RO remote I/O cabinet's chassis, and will provide a networked system to monitor and control the valves within these process areas.

A Prosoft or Fieldserver serial communication card will be installed in the I/O rack of the RO PLC, and will provide a networked system for motor control center (MCC) power monitors within the RO building electrical room.

Small vendor panels such as chemical metering pumps, which do not normally utilize PLCs for their control, will be required to provide necessary I/O for hard-wired connections to the PLC LCP or remote I/O cabinets.

10.2.4 SCADA System Communications

The Ethernet/Internet Protocol (IP) communication protocol will be used between the HMI workstation, Menifee SCADA servers, PLCs, and packaged systems. Category 6 copper cables will be run from the Ethernet switches, HMI workstation, and laptop ports within the RO building. Category 6 copper cables also will be run from the Ethernet switches and the PLCs located in the RO building. In addition, the AFD within the RO and Finished Water Pump Station electrical rooms will utilize the Ethernet/Internet Protocol communications protocol and be connected to the SCADA system by Category 6 cable to the Ethernet switch. Redundant fiber optic cable will be utilized between the Menifee operations building Ethernet switches, RO building Ethernet switches, for both SCADA and IS networks, the RO building and the remotely located PLCs. Patch panels will be provided for the conversion from copper to fiber at each end.

An Ethernet/IP device level ring over copper cable will be used between the redundant RO PLCs and the remote I/O chassis drops provided for the monitoring of the RO trains, finished water pumps, and the process chemical feed and transfer pumps.

The Modbus protocol utilizing RS 485 2-wire copper will be used between the RO PLC I/O chassis and power monitoring modules in the RO electrical room and between the RO PLC I/O chassis and the EMWD-furnished Kingfisher remote telemetry unit providing remote communication to the SCADA system via a 450-megahertz radio and a 900-megahertz radio. This same serial protocol will be used to network the control valves on each RO train to the RO remote I/O cabinets.

10.2.5 TELCO Communications

A telecommunications backboard within the COMM Room of the administration building will provide telephone service for PDF II as shown on the SCADA block diagram. The current requirements are:

-
- Two dedicated lines for the fire alarm control panel in the RO building control room.
- One line for the security system control panel located in the server room.

10.2.6 SCADA System Power

All SCADA system equipment components will be protected from power surges by providing individual circuits breakers from a UPS power distribution panel. Separate UPSs will be provided in the electrical rooms of the RO buildings to provide service to the SCADA system within the building. The administration UPS also will provide conditioned backup power for the security monitoring system and the administrative system hardware. The UPS battery will be sized to provide 90 minutes of backup power at full load. A separate battery cabinet is provided for this extended backup time. The UPS will be provided with a bypass switch, should the unit fail or require maintenance/troubleshooting. The SCADA system will monitor the status of the UPS via Ethernet connections.

10.3 Equipment/Instrumentation Tagging Convention

10.3.1 General

The following numbering system will be used for the tagging of all process equipment, instruments, control valves, and relief valves shown on the P&IDs. All tags will be preceded by the prefix”D0010”, which is a facility identifier used for PDF II. The tag number consists of a “unit process” number that indicates the process area where the device is located. The letters indicate the type of device and the second number is the “loop” number that defines functional groups of devices within a process and individual devices within a group.

Format: PP**LLL S**

Where:

P = 2-digit unit process number; 10 to 90.

LLL = 3-digit loop number; 001 to 999.

S = Optional suffix letter (A to Z) for devices in the same loop associated with the same unit (e.g., multiple hand switches that control equipment, but provide different functions).

PP**LLL S** = Not to exceed 32 characters

10.3.2 Unit Processes

The following unit process numbers will be used on the project:

10 Pretreated RO Feed

20 Misc. Systems: 20-Power, 21-Phone, 22-Security, 23-Fire, 24-HVAC

30 RO Treatment: 31-Train 1, 32-Train 2, 33-Train 3 (Future)

40 Decarbonator

50 RO Cleaning

55 RO Flushing

60 Chemical Systems: 61-NaOCl, 62-Ammonium Sulfate, 63-TI, 64-Sulfuric Acid, 65-Sodium Hydroxide (NaOH), 66-Corrosion Inhibitor, 67-Hydrofluorosilicic Acid, 68-Citric Acid, 69-Sodium Bisulfate

70 Finished Water

90 Future Fe/Mn Filtration System

10.3.3 Instrumentation

Instruments (such as flowmeters, pressure gauges, and analyzers), control valves, and relief valves will have the letters of the tag based on Instrument Society of America (ISA) Standard S5.1, which provides for a two- to four-letter descriptor. The ISA standard table for letter descriptors is shown on the P&ID legend sheet. On the P&IDs, the tags will be shown inside a circle, or “bubble.” On other drawings, specifications, and lists, the tag will be shown simply as a string of characters, such as, FIT-10110.

10.3.4 Equipment

Equipment, such as tanks, pumps and mixers, will have a one-letter descriptor that serves to distinguish between equipment and instruments that have the same number. Examples of one-letter descriptors include:

- M - Mechanical Equipment
- B - Blower
- T - Tank
- P - Pump
- G - Gate

The complete list of mechanical equipment letter descriptors is shown on the P&ID legend sheet.

On the P&IDs, the tag will be shown inside a rectangle and a brief equipment description (typically two to four words) will be placed near the tag.

10.3.5 Panels

Panels will be numbered similar to equipment. The following letter descriptors will be used:

- LCP (field panels)
- AFD panels

10.4 General Monitoring Requirements

All analog signals (flows, levels, pressures, conductivity, chlorine residual, pH, turbidity, etc.) connected to PLC I/O modules will be displayed on appropriate HMI graphic screens. Displays will be in engineering units. High and low alarms for analog signals will be displayed on the appropriate graphic screens.

All analog signals will be trended on HMI trend displays as real-time and historical trends.

All discrete signals (on/off, open/close) connected to PLC I/O modules will be displayed on appropriate HMI graphic screens.

Discrete alarm signals (fail, high, low, tripped, etc.) transmitted to the HMI via PLC I/O, or generated by the PLC will be displayed on the appropriate HMI graphic screens. All alarms will be maintained in the Historical Server with time and date stamp.

All pumps, RO trains, blowers, and miscellaneous equipment RUN times will be calculated and updated in the PLC system and transmitted to the HMI.

All timer settings, setpoints, and miscellaneous adjustments will be determined during application software development or plant startup. All settings and adjustments will be easily made through the HMI.

10.5 General Control Modes

Select equipment controlled by the PLC will have field-mounted selector switches that can be set for LOCAL or REMOTE operation. The REMOTE status of the selector switch will be an input to the PLC. In LOCAL mode, the operator will be able to control the equipment manually at the equipment location. This switch contact will be hardwired to the final control element and bypasses the HMI and PLC action. In REMOTE mode, the PLC will control the equipment in one of the two selected modes, MANUAL or AUTOMATIC via HMI faceplate graphics.

In REMOTE MANUAL mode, the operator will be able to operate the equipment manually from the HMI. There will be no PLC algorithm interlocks in effect, except for hardwired safety interlocks. In REMOTE AUTOMATIC mode, the equipment will be controlled by the PLC control algorithm interlocks.

If a final control device is called to operate in the REMOTE mode and the local switch is not in remote, a “NOT IN REMOTE” alarm will occur at the HMI.

If a final control device is called to operate in the REMOTE mode and the local switch is in remote, and the status input does not change for an adjustable preset time, the PLC subsystem will generate a “FAILED TO START” alarm and transmit to HMI.

10.6 Overall Control: Local vs. Remote

The Operator will be able to operate the PDF II facility from an HMI workstation at Menifee or an HMI workstation node at PDF II.

10.7 Plant Control Strategies

PDF II will be composed of several parts that work together to provide a final product water that goes into the EMWD distribution network. The following sections summarize basic control strategies for the plant facilities. All control will be exercised through the plant PLC with operator interface through the HMI workstation or the offsite link through the Kingfisher PLC. The major components are the raw water well pumping system, RO feed, two RO membrane trains, decarbonator, Clearwell CCT, finished water pump station, membrane cleaning and flushing systems, and the chemical storage and feed systems.

These descriptions include the functional requirements for the instruments, LCPs, and SCADA system. Refer to the process flow diagram and P&IDs when reading the loop descriptions for a better understanding of the system.

10.7.1 Starting Production

The existing filtration system is designed to treat water from a combination of desalination wells that currently feed the existing Perris I and Menifee Desalters.

The desalination facility RO PLC will control the operation of the desalination facility and interface with the wells, RO membrane trains, and all support systems. Desired plant flow and Lead RO train are

entered at the Operator's HMI workstations. Depressing an "Initiate Production" transmits the desired flow rate to the RO system PLC and gets the RO system ready for production by ensuring all equipment and valves necessary for the system to run are in auto, and by setting the valves in their correct positions. Initially, 2-FCV-10151 is fully opened and 2-FV-10211 and 2-FV-10221 are fully closed. The operating RO trains are selected by the operator.

Upon receipt of the 'desired flow rate' and 'Initiate Production' signals, the RO PLC will transmit staggered start signals to the required number of desalination wells to achieve the desired desalination facility flow rate.

10.7.2 Raw Water System Pressure

As flow enters the facility, PRV-90101 on the raw water purge line will divert (waste) flow water flow to the pond and maintain an operating pressure of 80 psi. Should the pressure rise to 85 psi, the high-pressure relief valve (PRV-90102) will open, discharging the raw water to the pond.

10.7.3 Starting RO Production

When the raw water flow reaches the setpoint flow for one train, the raw water valve (PRV-90610) opens and hydraulically controls its position to maintain a constant downstream pressure of 55 psi. This flow diverts to the ponds through the open RO waste valve (FCV-10151), and the pH loop for pH addition (if needed) will be initiated and TI addition begins.

Once the pH is stabilized (if acid is needed), valve FCV-10151 will start to close to build up pressure in the system. When the setpoint pressure is achieved, the flow valve for the selected lead train will open and start the RO feed pump.

10.7.4 Membrane Feed Bypass or "Blend Control"

A certain volume of pretreated water will be blended with membrane permeate before it goes to the Clearwell. This control loop will automatically maintain a preset "blend" using a PLC-programmed proportional-integral-derivative (PID) controller (available inrush current [AIC]-70011). The PID algorithm will control the conductivity of the raw water/permeate blend by modulating valve FCV-10046. The PID process variable will be the blended water conductivity measured by AE/AIT-70015. The conductivity setpoint will be entered by the Operator based on water quality data. The output of controller AIC-70015 will be used to modulate valve FCV-10046. If the conductivity measured by AE/AIT-70015 is lower than the preset value, the PID algorithm will increase flow through the bypass by increasing the opening of FCV-10046.

A maximum bypass flow will be allowed, as a percentage of total finished water flow. If the flow measured at FIT-10045 is equal to this maximum flow, the control for FCV-10046 will not be allowed to open more. If the flow measured at FIT-10045 is greater than the maximum flow, the control for FCV-10046 will modulate bypass flow to the setpoint.

The controller faceplate, process variable, controller output, setpoint and AUTO/MANUAL status will be displayed at the HMI

10.7.5 Raw Water pH Control

A PID controller (AIC-10048) will control the speed of the selected sulfuric acid metering pump to maintain the preset raw water pH. The measured value for the PID loop comes from pH analyzer AE/AIT-10048. If the pH measured by AE/AIT-10048 is higher than the preset value, the selected sulfuric acid pump will increase the feed rate until the preset pH value is reached. If the pH measured by AE/AIT-10048 is lower than the preset value, the selected sulfuric acid pump will decrease the feed rate until the preset pH value is reached.

This pH control loop will be augmented to compensate for raw water flow changes. The speed of the metering pump will be adjusted to correspond to the treated water flow. The treated water flow will be measured by FE/FIT-90111 minus the bypass flow (FE/FIT-10045). Controller faceplates and all other associated variables will be displayed at the HMI.

10.7.6 Pretreatment TI Feed Control

The speed of the selected scale inhibitor pump will be controlled proportional to the treated water flow measured by FE/FIT-90111 minus the bypass flow (FE/FIT-10045).

10.7.7 Cartridge Filter Differential Pressure

The cartridge filter differential pressure will be computed in the PLC by using the upstream and downstream pressure transmitters (PIT-10050 and PIT-10122). The differential pressure will be displayed on the HMI and an operator-adjustable high differential pressure setpoint will result in an alarm at the HMI.

10.7.8 Membrane Feed to Waste Control

During the initial first membrane startup, FCV-10151 will be controlled by FIC-10151 to maintain a flow equal to single-train rated flow. Later in the sequence, the valve will be fully closed and will remain closed during the startup of the second train.

During train operation, if the feed pump suction pressure (PIT-10122) exceeds an adjustable preset HIGH-HIGH pressure limit, the controller will OPEN valve FCV-10151 until the pressure is back to NORMAL value. The operator will generate an alarm indicating, “Feed to Waste Valve open due to High Suction Pressure” and modulate the valve to maintain NORMAL pressure. After an adjustable time (0 to 60 minutes), the operator will close the valve.

The controller faceplate, process variable, controller output, setpoint and AUTO/MANUAL status will be displayed at the HMI.

10.7.9 RO Feed Pumps

There are two RO feed pumps (P-10210 and P-10220) driven by adjustable frequency drives AFD-10210 and AFD-10220. The tag numbers used below are for pump P-10210; the controls for P-10220 are typical.

Manual Operation

A START/LOCK-OUT-STOP switch will be provided near the pump to stop the drive. This will only be a control stop and will not be used as a safety lockout. For maintenance purposes, standard lock-out/tag-out procedures at the MCC will be followed. The START/LOCK-OUT-STOP switch will be hard wired into the drive control circuits.

Manual operation of feed pumps will require certain prerequisite conditions, and the operator will have to ensure all safety interlocks. Similar safety interlocks will be programmed for the PLC start command.

When the switch is in LOCAL position, field STOP is not pushed and the drive is in MANUAL mode, the pump could start and stop and the speed will be manually controlled from the drive located in the electrical room.

When the local switch is in REMOTE position, field STOP is not pushed, and the drive is in AUTO mode, then the soft switch at the HMI will be used to start and stop the feed pump manually from the HMI. The speed could be controlled manually by putting controller FIC-31107 in MANUAL and using the

cursor on the face plate to control speed to maintain a desired total feed flow as measured by the sum of permeate flowmeters FE/FIT-31206, FE/FIT-31107, and concentrate flowmeter FE/FIT-31209.

Automatic Operation

The feed pump will always be manually started from the HMI when all prerequisite safety interlocks are satisfied and the sequence calls for starting the pump. Once started at the preset minimum speed, the PLC controller (FIC-31107) will be put in AUTO mode to control the speed to maintain the preset flow. EMWD will have the capability to operate the system from a remote location.

10.7.10 Interstage Turbocharger -32150 and Auxiliary Nozzle Valve (ANV-32151) -

There will be a turbocharger provided on each RO process train. The turbocharger, consisting of a pump and a turbine coupled together, is located between the two stages of a membrane train. The turbocharger boosts the pressure of the first stage concentrate by utilizing the pressure in the second stage concentrate. The turbocharger output will be controlled by an auxiliary nozzle valve that is an integral part of the turbocharger. The auxiliary nozzle valve and controller assembly are stand-alone systems that do not interface with the facility SCADA system.

10.7.11 Membrane Permeate/Concentrate Flows and Recovery Control System

The SCADA system programmer will provide displays to allow membrane system parameter configuration, such as acceptable recovery range for each train, minimum concentrate flow, etc. This display will be password-protected to allow access to supervisory personnel only.

The operator will enter a TARGET percent recovery (Y) at the SCADA HMI. If the entered value of Y is out of the preset recovery range, it will generate an alarm and prompt the operator to select a value within the range. The operator will enter a percent TARGET permeate flow setpoint (Q_p) at the SCADA HMI. Again, if the value is outside the range, it will generate an alarm and prompt the operator to re-enter a value within the range.

The operator will enter a minimum acceptable value of concentrate flow (Q_c min) in the RO configuration display at the SCADA HMI.

Percent recovery is defined as follows:

$Y = [Q_p/(Q_p+Q_c)]*100$

Where Y = Percent Recovery

Q_p = Permeate Flow
Q_c = Concentrate Flow
Q_{ct} = Target Concentrate Flow
Q_{cm} = Minimum Concentrate Flow

Based on entered TARGET values of Y and Q_p, targeted (maximum allowable) concentrate flow will be computed by the PLC algorithm as follows:

$Q_c = Q_p\ (100-Y)/Y$

If $Q_c < Q_{cm}$,

THEN use Q_{cm} as the concentrate flow setpoint.

1. Use PLC algorithm FIC output to modulate RO feed pump speed via AFD-10210 to maintain permeate flow Qp setpoint. This control will be similar for both trains. Should a High-High pressure limit be reached, the operator will have to initiate train shutdown. Similarly, the operator will have to initiate train shutdown if the RO feed pump suction pressure drops below an operator-adjustable preset value.

Concentrate flow control will be achieved primarily by modulating FCV-31210 to keep the concentrate flow at target flow (Q_{ct}). The valve will open more if the Q_c measured by FIT-31209 is less than Q_{ct}. The amount of opening will be proportional to the variance (Q_{ct} - Q_c). On the other hand, if the concentrate flow is higher than the target value, the control valve will close proportional to the variance (Q_c - Q_{ct}).

2. The second stage flux ratio (SSFR) will be controlled by the first stage permeate control valve (FCV-31106). The SSFR is defined as follows:

   SSFR = Ratio of Second Stage Permeate Flow as measured by FE/FIT-31206 to total flow as measured by the sum of FE/FIT-31206 and FE/FIT-31107.

   Operator will select a SSFR setpoint range by inputting minimum SSFR (SSFR min) and maximum SSFR (SSFR max). If the SSFR is within the range, no action will be initiated. If SSFR falls below SSFR min, then FCV-31106 will start closing to hold the SSFR at SSFR min. While modulating, the FCV will open if the SSFR rises above SSFR min. Once the FCV is back to a fully open position, it will be disengaged (an adjustable time delay of 0 to 60 seconds will be used). The FCV will not modulate until the SSFR falls below SSFR min again. If the SSFR increases above SSFR max, an alarm will be generated. FCV position, fully closed status, and fully open status will be indicated.

3. Controller faceplates, all setpoints, process variables and AUTO/MAN status, target recovery and actual recover will all be displayed at HMI.

10.7.12 Permeate to Waste Controls (Off-Spec Permeate)

The capability to manually purge off spec permeate to waste will be provided. This capability will be used mainly during initial commissioning, but can be used at any other time. Manual isolation valves (HV-31131 and HV-31132) will be provided on each side of a spool piece in the permeate to waste line. These valves will be normally closed. The spool piece will be provided with a tap and manual valve (HV-31133) to drain the contents of the spool when the isolation valves are closed. This permeate to waste line will be provided with an air gap at the pond.

10.7.13 Decarbonator Bypass

Some RO permeate can be set to bypass the decarbonator. This is done to stabilize the pH and to minimize chemical usage. RO permeate has a low pH, and going through the decarbonator may raise the pH (alkaline) by removing CO_2. The operator will enter the desired flow for the bypass, measured by FE/FIT-40030, and the PLC controller FIC-40030 will adjust the decarbonator bypass valve FCV-40031 to maintain the desired flow setpoint.

10.7.14 Post-Treatment Corrosion Inhibitor Feed Control

The speed of the selected metering pump will be controlled proportional to the total of the permeate water flowmeters (FE/FIT-31107, FE/FIT-31206, FE/FIT-32206 and FE/FIT-32107).

10.7.15 Clearwell/Finish Water Off-Spec Water

During the initial startup of the facility, water quality in the CCT may not satisfy criteria for delivery into the distribution system. Similar situations may occur during the maintenance, such as after cleaning of the CCT and/or finished water pump station Clearwell. For those instances, operators will have the capability to discharge the off-spec water to the pond through manual valve HV-70050.

10.7.16 Post-Disinfection Sodium Hypochlorite Feed Control

The objective of the post-disinfection sodium hypochlorite system is to provide minimum residual chlorine in the finished product water before it is delivered into the distribution network. The sodium

hypochlorite feed rate will be proportional to the total flow of finished water as measured by FE/FIT-70211.

10.7.17 Post-Treatment Ammonium Sulfate Feed Control

The ammonium sulfate dosage is a fixed ratio of the sodium hypochlorite dosage. Once the sodium hypochlorite per gallon of finished water flow is determined based on AIT 70013, the PLC will compute the ammonium sulfate dosage as a fraction of the hypochlorite dosage. The fraction "f" will be adjustable (from HMI), normally set in a range between 0.25 and 0.33. Using this relationship, the ammonium sulfate pacing ratio will be computed and used for ammonium sulfate pacing.

10.7.18 Post-Treatment Fluoride Feed Control

The objective of the post-fluidization is to provide a minimum residual fluoride in the finished product water before it is delivered into the distribution network. The hydrofluorosilicic acid solution feed rate will be proportional to the flow of the finished water (FE/FIT-70211) and the fluoride concentration as measured by AE/AIT-70223. This may be added in the future.

10.7.19 Final Metering

Plant finished water is monitored by a magnetic flowmeter (FE/FIT 70211) to be used in the chemical feed pump pacing for the post-treatment chemical addition. Plant W1 and W2 are withdrawn from the discharge header going to the plant distribution system. Plant use will be monitored by FE/FIT-70214.

10.7.20 Membrane Cleaning System

The chemical preparation for the cleaning process will be a manual process performed in the field via LCP-50010 (located adjacent to CIP tank, TK-50010), LCPs-65210, and LCP-68210. LCP-50010 will be used to control and monitor the CIP cleaning operation, while LCP-65210 and LCP-68210 will be used to manually control the sodium hydroxide and citric acid transfer pumps and monitor the flow of chemical added to the CIP tank.

If dry chemicals are to be used, the operator will manually load the chemical bag contents into the CIP hopper during the mixing stage of the chemical preparation process.

The CIP tank (TK-50010) is used for the cleaning of RO membranes. The cleaning operation will be a manual operation with control capability from the HMI provided the associated control valve hand switches are in the REMOTE position.

Cleaning Cycles

The cleaning cycle will be performed manually and will consist of acid and caustic chemical wash/flush cycles. Each cycle will consist of a chemical wash followed by a permeate flush. The train will be sequentially washed, initially with a citric acid solution, then with a sodium hydroxide solution. Each cycle will require solution preparation, solution circulation, a membrane soak period, solution recirculation, then a permeate flush.

Solution Preparation and Cleaning

- Operator opens valve FV-50005 on the permeate makeup supply line.
- When the desired level is reached, operator STOPS permeate makeup water addition.
- Operator will ensure that the manual valve (HV-50043) to membrane system is CLOSED, manual recirculation valve (HV-50044) is OPEN, and HV-50048 is CLOSED isolating the CIP tank from the permeate flush tank and creating a recirculation path for chemical mixing.

- At LCP-50010, the operator transfers the desired amount of chemical to be added to the CIP tank and starts the membrane cleaning pump (P-50020) using HS-50020B; operator adjusts the speed utilizing SHK-50010A to provide mixing of the added chemical. Operator observes pump status on LCP-50010.
- Operator turns electric heater (TE 50010) on and monitors the pH and temperature on AE/AIT-50023 (pH) and TIT-50022 (temperature), respectively on the LCP. The operator will continue the recirculation until complete mixing of the chemical is achieved and preset cleaning solution temperature is reached.
- Operator makes sure that all manual valves related to membrane cleaning for the selected train and stage are in proper position and verified/logged, in a standard operating procedure checklist.
- Operator Opens the valves to feed cleaning solution to membranes, CLOSES the recirculation valve, and adjusts pump speed to provide the required flow through the membrane.
- Operator observes temperature of the circulated chemical and stops the pump (P-50020) when the temperature is again at the desired level and leaves membranes to be soaked with the cleaning solution for a predetermined period of time.
- After soaking time expiration, the operator will start pump P-50020 to recirculate cleaning solution through the membrane system for a predetermined period of time that will constitute completion of the chemical treatment portion of the cleaning cycle.
- The above-described cycle may be repeated two more times.
- After the cleaning operation is complete, the operator shuts down the cleaning system by closing valves to membranes, opening the recirculation valve, stopping the cleaning pump, closing the permeate makeup supply, and closing HV-50043 to isolate the CIP tank for the permeate flush.
- Used cleaning solution will be manually discharged into the CIP neutralization tank (HV-50047), or discharged into the sewer by opening the drain valve.
- The cleaning cycle will be finished by flushing fully one volume of permeate water through the stage. This is done manually via LCP-550010.
- The above process will be repeated for both chemicals and for both stages of the RO train.
- The operator positions the valves on the train and prepares the train for operation again.
- All data related to the cleaning system pH, temperature, cleaning solution flow, cleaning tank level, equipment status, water volume, quantity of chemicals used, alarms, and others are displayed on the HMI.

10.7.21 Membrane Flushing

The membrane flushing process will be an automatic process. It will be used when taking a train out of service and as part of the membrane cleaning cycle. Flushing with permeate will be controlled from LCP-55010. The flushing system for taking a train out of service will be a two-step process: an initial flush with RO feedwater, then a final flush with permeate water. In the cleaning process, only the permeate flush will be provided. In the cleaning process, each stage of the train will be individually flushed.

RO Flush Tank T-55010 will be used in flushing operations for the RO membranes. The flushing operation will be an automated operation with manual control capability from the HMI, provided the associated control valve hand switches are in the REMOTE position.

Out-of-Service Flushing Operation (Train 1, Typical for Train 2)

- Initial flushing will be done using raw water after the RO treatment system is stopped for a preset period of time. Final flushing will be done using permeate water immediately after initial flushing.
- Before flushing starts, adjust RO feed pump to the preset flush water flow rate.
- Valves FCV-31106, FV-31205, FV-31111, FV-31216, FV-31104, FV-31214, FV-31110, and FV-31215 will be fully closed. Valves FCV-31210 and FCV-31212 will be fully open. That will divert all flush water flow to the CCR line to the brine pump station at the Perris I and Menifee Desalters.
- After two volumes of the pressure vessels and piping water pass through, initial flushing is completed and final flushing will proceed.
- The RO feed pump is OFF and the RO inlet valve FV-10211 is CLOSED.
- Train 1 flushing valve FV-10215 is OPENED and pump P-55020 is STARTED. This will flush the RO feed pump and RO train with permeate and discharge the flow to the CCR line to the existing brine pump station at the Perris I and Menifee Desalters. After two volumes of pump can, pressure vessels, and piping water pass through, the pump will be shut OFF and all the valves will return to their normal positions for operation.

CIP Permeate Flush

- The permeate flush tank is automatically filled to an adjustable predetermined level by OPENING FV-55001.
- CIP flushing is performed during the cleaning process of the RO membranes and is performed after each chemical cleaning step for each RO stage. The flushing process is a manual operation performed at LCP-55010.
- HV-55046 is CLOSED and HV-55044 is OPENED to create a path to convey permeate flow to the CF line.
- Ensure that valves FV-31110 is OPENED; andFV-31104, FV-31103, and FV-31223 are CLOSED, and valve FV-31210 and FV-31226 are OPENED, maintaining a path for permeate flow through Train 1, Stage 1 discharging the flow to the SCS line to the CIP Neutralization .
- Manually START the RO flush pump (P-55020) and adjust SPEED at the LCP to maintain the required flow through the first stage.
- After one volume of water of Stage 1 pressure vessels and piping water pass through, the pump will be shut OFF and the manual valves will be repositioned to permit an out-of-service flush to occur automatically, if required.
- Repeat the above steps for flushing Stage 2 utilizing FV-31215; and FV-31214, FV-31103; FCV-31223; and FV-31210 and FCV-31212 and FV-31226; respectively for Stage 2 flushing.
- FV-50045 by the cleaning tank is closed to prevent flush water from going back into the cleaning tank. HV-50004 is only opened to allow the CCR line to drain to the sump.

10.7.22 Permeate Transfer Between Permeate and CIP Tanks

Manual valves will have to be positioned to perform this transfer. The operator will have to inhibit a flushing operation from automatically being initiated by the system by either inhibiting it at the HMI or by placing hand switch 50010A, CLEANING MODE/ NORMAL OPERATION (C/N) on the CIP LCP in the “C” position. The manual valves just prior to the cartridge filter for each pump system (HV-50043 and HV-55043) must be closed. Proper positioning of manual valves HV-50044, HV-50045, HV-55044, and HV-55045 will create a direct line between the two tanks. To transfer permeate from one tank to the

other, the operator must manually START the appropriate pump and monitor the tank levels at the HMI or in the field and shut off the pump when the tank level has reached the desired value. At the completion of the transfer, the operator must reset the valves to their prior positions.

10.7.23 Finished Water Pump Station

The finished water pump station pumps will transfer product water from the Clearwell to the distribution network based on EMWD's requirements (operator input). The AFD-driven pumps will operate within a preset range of maximum and minimum water levels in the Clearwell.

Manual

When the switch is in LOCAL position, field STOP is not pushed and the drive is in MANUAL mode, the pump will be started and stopped and the speed manually controlled from the drive located in the electrical room.

When the local switch is in REMOTE position, field STOP is not pushed, and the drive is in AUTO mode, then the soft switch at the HMI can be used to start and stop the feed pump manually from the HMI.

Automatic

When the local switch is in REMOTE position, field STOP is not pushed, and the drive is in AUTO mode, when the soft M/A switch at the HMI in AUTO, the pumps will be controlled based on the PID control algorithm in the PLC, with pump sequence logic as follows:

- At a preset minimum level, start Lead variable speed pump at 60 percent speed. PID controller measures level, compares to a setpoint, and based on error generates an output to control pump speed.
- Note that the level setpoint will be an adjustable level band 6 inches to 12 inches, instead of a single value. This dead band will allow reduced cycling of pumps.
- When the speed of the Lead pump has reached 100 percent and the level is higher than the set level band, start at variable speed pump at 60 percent speed. Ramp down Lead pump and ramp up Lag pump such that both pumps are working at a common speed.
- When both pumps are running at 100 percent speed and the level is rising above the set band, generate a HIGH-HIGH alarm at the HMI. Advise operators to shut down a train or reduce the product water flow.
- On falling level, follow the sequence in reverse.
- When level drops below cut-off level and both pumps are running at 60 percent speed, stop the Lag variable speed pump. On the low level in the Clearwell, stop all pumps.
- Generate level alarm.
- Provide high and low level alarm, and pump status at HMIs. Provide controller faceplate for display of process variable, setpoint, controller output, AUTO/MANUAL status.
- Provide alternation of pumps using a 1, 2, 3 sequence following each cycle of operation and based on 24-hour pulse.
- When any of the local switches are not in REMOTE and AUTO position, those pumps will be considered out-of-service and the sequence will bypass these pumps.
- At HMIs, provide means for modifying PID turning constants, changing set level band.

When at least one pump is running, provide downstream sodium hypochlorite and ammonia feed control. Provide controller faceplates for PID loops and ratio control. When any of the local switches are

not in AUTO or DISABLE position, those pumps will be considered out-of-service and the sequence will bypass these pumps.

10.7.24 Concentrate Pump Station

The existing brine pump station at the Perris I and Menifee Desalters will be modified to increase the capacity of the existing pumps. The control of the existing pump station may require minor modifications.

10.8 Chemical Systems for Desalination Facility

There are typically two chemical feed pumps provided for each chemical application. Duty assignment selection will be operator adjustable from the HMI. Each pump will be driven by an AFD for effective speed control. The pump output rate may be further fine-tuned by manual adjustment of the stroke length.

Each pump can be isolated using manually operated hand valves.

Local Manual Operation of Metering Pumps

When the AFD Local/Remote switch is in LOCAL position, the pump can be started locally with local speed control. When the switch is in REMOTE, the PLC control will take over. The operator will have to ensure that all manual valves on the system are properly set for manual and automatic controls.

LOCAL-Manual operation will be used only for testing. For safety reasons, this will not be the normal or preferred mode of operation.

Automatic Operation of Metering Pumps

When the AFD switch is in REMOTE, the drive will respond to RUN command and speed and stroke, if applicable, control signal(s) from the PLC. The operation of the metering pumps from the PLC and HMI will be based on control requirements defined above.

All motor/drive RUN times will be computed in the PLC and reported to the HMI.

All digital inputs will be connected to the PLC reported to the HMI.

All analog inputs connected to the PLC will be converted to engineering units and reported to the HMI.

Safety Interlocks/Alarms

A pump discharge HIGH pressure will shut down the associated feed pump and provide an alarm at the HMI. A tank level switch low low (LSLL) condition will shut down the associated feed pump and provide a shutdown alarm to the PLC for control action and display on the HMI.

Safety Interlocks/Alarms

A pump discharge HIGH pressure will shut down the associated feed pump and provide an alarm at the HMI. A tank low level (LSLL) condition will shut down the associated feed pump and provide a shutdown alarm to the PLC for control action and display on the HMI.

10.8.1 Sodium Hypochlorite System

This system will consist of an onsite sodium hypochlorite generation system. This system will be a complete package. PLC-300, supplied as part of the package, will control and monitor the hypochlorite generation system. PLC-300 will communicate with the main plant PLC using a Data Highway Plus data link. The data exchange requirement between the main PLC and PLC-300 will be coordinated by the Contractor to satisfy the requirements of the manufacturer. The package system will generate sodium hypochlorite and store it in storage tank TK-61020.

Hypochlorite Metering Pump Control – Primary Disinfection for Permeate, Pumps P-61110 and P-611120: All hand valves will be normally set for feed to pre-chlorine contact tanks.

Hypochlorite Metering Pump Control – Final metering: This feed point will be used as a measure to boost the chlorine level prior to going to distribution if necessary. Feed pumps P-61130 and P-61140 will be controlled as specified in Section 10.7.16.

When FLOW PACED mode is selected, the automatic flow paced addition of sodium hypochlorite solution will be provided to the chlorine injection point, based on the following relationship to calculate the required sodium hypochlorite feed pump rate S:

$$\text{Rate} = [\text{Flow} * \text{Dose} * (60) * (74.5/71)] / [1{,}000{,}000 * \text{Conc} * \text{SG}]$$

Where:

Rate = Target NaOCl pump metering rate (gph)
Flow = Finished Water Flow (gpm)
Dose = Sodium Hypochlorite Dosage Setpoint (mg/L)
Conc = Sodium Hypochlorite Solution Concentration (percent)
SG = Sodium Hypochlorite Solution Specific Gravity

The sodium hypochlorite solution concentration is approximately 0.8 percent; its specific gravity is approximately 1.03 (may vary slightly). The 74.5/71 is a conversion factor from NaOCl to CL2.

The pump speed can be calculated using the equation below:

$$\text{Speed (percent)} = 100 * (\text{Rate} / \text{NaOCl Pump Capacity at Max. Speed in gph})$$

All the above parameters will be operator-adjustable on a setup display.

10.8.2 Sulfuric Acid Storage, Transfer and Metering System (future addition)

Sulfuric Acid Storage

Sulfuric acid will be stored in tank TK-64010 located in the chemical storage area. Acid will be brought in by truck and loaded in the storage tank. A 2-inch truck connection will be provided for connection to the tank.

A truck-loading panel (LCP-64010) will be provided near the tank. The operator will note the tank level on LIT-64010 before starting the tank-filling operation. While loading, the operator will watch the level indicator and stop loading before the high level is reached.

A high-level condition will be alarmed on the panel and reported to the HMI. Similarly, a low level condition will be locally alarmed and transmitted to the HMI. The HIGH or LOW alarm will consist of a beacon light; operation of the beacon can be locally reset using RESET buttons.

Sulfuric Acid Metering Pumps

There are two acid-metering pumps (P-64110 and P-64120). These pumps will be controlled as described in Section 10.7.5.

10.8.3 Ammonium Sulfate Storage and Feed System

Ammonium sulfate will be stored in tank TK-62010 located in the chemical storage area. Ammonium sulfate will be brought in by truck and loaded in the storage tank. A 2-inch truck connection will be provided for connection to the tank.

A truck-loading panel (LCP-62010) will be provided near the tank. The operator will note the tank level on LI-62010 before starting the tank-filling operation. While loading, the operator will watch the level indicator and stop loading before high level is reached.

A high-level condition will be alarmed on the panel and reported to the HMI. Similarly, a low-level condition will be locally alarmed and transmitted to the HMI. The HIGH or LOW alarm will consist of a beacon light; operation of the beacon can be locally reset using RESET buttons.

Ammonium Sulfate Metering Pumps

There are two ammonium sulfate metering pumps (P-62110 and P-62120). These pumps will be controlled as described in Section 10.7.17.

For ammonium sulfate injection:

$$\text{Rate} = [\text{Flow} * \text{Dose} * \text{Ratio} * (60)] / [1{,}000{,}000 * \text{Conc} * \text{SG}]$$

Where:

Rate = Target NH4 pump metering rate (gph)
Flow = Finished Water Flow (gpm)
Dose = Sodium Hypochlorite Primary Disinfection Dosage Setpoint (mg/L)
Ratio = Ammonium to Chlorine Addition Weight Ratio
Conc = Ammonium Sulfate Solution Concentration (percent)
SG = Ammonium Sulfate Solution Specific Gravity

The ammonium sulfate solution concentration is approximately 40 percent, and its specific gravity is approximately 1.2. The ammonium to chlorine addition weight ratio is an operator-adjustable value; the value is typically 0.2 to 0.25 (equivalent to a range between 5-to-1 and 4-to-1).

The pump speed can be calculated using the following equation:

$$\text{Speed (percent)} = 100 * (\text{Rate} / \text{NH4 Pump Capacity at Max. Speed in gph})$$

10.8.4 Sodium Hydroxide Storage Transfer and Metering System

NaOH Storage System

The operation and monitoring of the NaOH storage system is similar to that described for acid storage. An NaOH loading panel (LCP-65010) will be provided for the monitoring of loading operation. Alarms and level for the tank will be indicated on the local panel and transmitted to the HMI via the PLC system.

RO Post-Treatment NaOH Metering Pumps

Two AFD-controlled metering pumps (P-65110 and P-65120) will be dedicated for feeding NaOH to the finished water Clearwell.

RO Cleaning Transfer Pumps

The NaOH transfer pumps (P-65210 and P-65220) will be controlled manually from LCP-68110 as specified in Section 10.7.20. The operator will select the desired pump to run from HS-65210. The pump discharge will be measured by a flowmeter (FE/FIT-65203) for display and totalized at the panel. The operator will set the desired total flow of chemical to be added to the RO CIP tank on the totalizer and start the pump. The pump will run until the desired totalized flow is loaded into the cleaning tank. A contact from the totalizer will stop the pump. The operator must manually reset the totalizer before starting the pump. The NaOH and citric acid pumps will be interlocked to prohibit operation of the other.

10.8.5 TI Storage and Metering System

TI Storage

TI will be stored in tank TK-63010 located in the chemical storage area. TI will be brought in by truck and loaded in the storage tank. A 2-inch truck connection will be provided for connection to the tank.

A truck-loading panel (LCP-63010) will be provided near the tank. The operator will note the tank level on LIT-63010 before starting the tank-filling operation. While loading, the operator will watch the level indicator and stop loading before the high level is reached.

A high-level condition will be alarmed on the panel and reported to the HMI. Similarly, a low-level condition will locally be alarmed and transmitted to the HMI. The HIGH or LOW alarm will consist of a beacon light; operation of the beacon can be locally reset using RESET buttons.

RO Pretreatment TI Metering Pumps

Two AFD-controlled metering pumps (P-63110 and P-63120) will be dedicated for feeding TI to the cartridge filters. The operation of these pumps will be as described in Section 10.7.6.

10.8.6 Corrosion Inhibitor Storage and Metering System

Corrosion inhibitor will be stored in tank TK-66010 located in the chemical storage area. Corrosion inhibitor will be brought in by truck and loaded in the storage tank. A 2-inch truck connection will be provided for connection to the tank.

A truck-loading panel (LCP-66010) will be provided near the tank. The operator will note the tank level on LIT-66010 before starting the tank-filling operation. While loading, the operator will watch the level indicator and stop loading before the high level is reached.

A high-level condition will be alarmed on the panel and reported to the HMI. Similarly, a low level condition will locally be alarmed and transmitted to the HMI. The HIGH or LOW alarm consists of a beacon light; operation of the beacon can be locally reset using RESET buttons.

RO Post-Treatment Corrosion Inhibitor Metering Pumps

Two AFD controlled metering pumps (P-66110 and P-66120) will be dedicated for feeding corrosion inhibitor to the Clearwell.

10.8.7 Hydrofluorosilicic Acid Storage, Day Tank, and Metering System (future addition)

Hydrofluorosilicic acid will be stored in tank TK-67010 located in the chemical storage area. The acid will be brought in trucks and loaded in the storage tank. A 2-inch truck connection will be provided for connection to the tank.

A truck-loading panel (LCP-67010) will be provided near the tank. The operator will note the tank level on LIT-67010 before starting the tank-filling operation. While loading, he will watch the level indicator, and stop loading before the high level is reached.

A high-level condition will be alarmed on the panel and reported to the HMI. Similarly, a low-level condition will locally be alarmed and transmitted to the HMI. The HIGH or LOW alarm will consist of a beacon light; operation of the beacon can be locally reset using RESET buttons.

The day tank will be used to hold the volume of acid to be utilized in 1 day. The tank will be provided with a sight gauge and level switches to monitor and control the daily filling of the tank. A transfer valve (FV-67100) and transfer pump (P-67020) will be used to transfer the acid to the day tank. The pump will be controlled from LCP-67020. In AUTO, the transfer valve and pump will be operated to fill the day tank to the HI level (LSH-67020). A HI level will be alarmed at the HMI. A LO level will be interlocked with the acid feed pump operation.

Two AFD-controlled metering pumps will be dedicated for feeding hydrofluorosilicic acid to the facilities finished water header. The operation of these pumps will be as described in Section 10.7.18.

10.8.8 Citric Acid Storage and Transfer System

Citric acid will be stored in tank TK-68010 located in the chemical storage area. Acid will be brought in by truck and loaded in the storage tank. A 2-inch truck connection will be provided for connection to the tank.

A truck-loading panel (LCP-68010) will be provided near the tank. The operator will note the tank level on LIT-68010 before starting the tank-filling operation. While loading, the operator will watch the level indicator, and stop loading before the high level is reached.

A high-level condition will be alarmed on the panel and reported to the HMI. Similarly, a low-level condition will locally be alarmed and transmitted to the HMI. The HIGH or LOW alarm will consist of a beacon light; operation of the beacon can be locally reset using RESET buttons.

The citric acid transfer pumps (P-68210 and P-68220) will be controlled manually from LCP-68210 as described in Section 10.7.20. The operator will select the desired pump to run from HS-68210. The pump discharge will be measured by a flowmeter (FE/FIT-68111) for display, and totalized at the panel. The operator will set the desired total flow of chemical to be added to the RO cleaning tank on the totalizer and starts the pump. The pump will run until the desired totalized flow has been loaded into the cleaning tank. A contact from the totalizer will stop the pump. The operator must manually reset the totalizer before starting the pump. The NaOH and citric acid pumps will be interlocked to prohibit operation of the other.

10.8.9 Process Drain System

The drain from the chemical storage areas and from the process areas will be routed to a sump that will pump the contents to the brine pump station located at the existing Perris I and Menifee Desalters.

Pumps will operate as Lead and Lag pumps with Auto/Manual alternation set at LCP-41300. Pump HAND/OFF/AUTO selector switches must be in Auto position for automatic operation of the drain pumps.

When the Low level switch (LSL-51300) is activated the Lead pump will start. If the level continues to rise and the High level switch (LSH-41300) is activated the Lag pump will run. All pumps in operation will Stop when the Low Low level switch (LSLL-41300) is activated. High High level switch (LSHH-41300) and Low Low level switch (LSLL-41300) activation will be indicated/alarmed at the HMI.

SECTION 11

Electrical System

11.1 Introduction

This section outlines assumptions, open items, and electrical analysis (calculations) to be performed. It also establishes basic design criteria for the PDF II electrical system. Electrical system design will include legends, one-line diagrams, plan drawings, panel and raceway schedules, cable diagrams, control diagrams, riser diagrams, details, and specifications.

The electrical system will be designed to safely operate equipment within PDF II as identified in this report and summarized below:

- Process mechanical equipment (pumps, mixers, compressors, control valves, filters, process package systems, heat trace, tank heaters)
- Facility mechanical equipment (heaters, ventilation fans, air conditioners, sump pumps, sample pumps)
- Life safety (fire detection and notification equipment)
- Receptacles (maintenance, convenience, dedicated)
- Lighting (interior, exterior, backup)
- Instrumentation and control (field panels, control stations, instruments, computers, network switches, and PLCs)
- Security (cameras, computer, video monitors, access devices, communications)

11.1.1 Assumptions

- PDF II is a noncritical site and does not require the installation of an alternative and/or standby power generation system (i.e., solar power, diesel engine generator, portable diesel engine generator).
- No paging or access points for wireless telephone systems are required. Operator communications will be via cell phone, telephone (via network) or two-way radios.
- EMWD-approved manufacturers of 18-pulse AFDs include Toshiba and ABB.
- EMWD-approved manufacturers of power distribution equipment include Eaton (Cutler-Hammer), Schneider Electric (Square-D), or GE.
- EMWD-approved manufacturers of motor control equipment include Eaton (Cutler-Hammer), Schneider Electric (Square-D), Allen-Bradley (Rockwell), or GE.
- CH2M Master Specification System will be used in coordination with EMWD Specifications.
- Power circuits for process instrumentation will be individually protected by a fuse or breaker so that the isolation of power to one instrument does not impact the operation of another.
- Intrusion monitoring will not be required for outdoor panels. Outdoor panels will be specified to incorporate the necessary provisions supporting security locks.
- Raceway systems associated with containment areas will be located above maximum containment spill lines.

11.1.2 SCE Coordination

Coordination between CH2M HILL, EMWD, and SCE, for the method of service at PDF II is needed prior to commencement of final design to prevent project delays and changes to project scope:

- Electrical service entrance topology:
  - Single utility pad-mounted transformer powering single-ended service entrance switchboard
  - Two utility pad-mounted transformers powering service entrance switchboards if required by operating load demand.
  - Primary metering already established at Site.
- Electrical service primary system ratings and parameters to be coordinated:
  - Electrical utility pad-mounted utility transformer kilovolt-ampere (kVA) rating and impedance.
  - Electrical utility primary and or secondary three-phase (L-L) and single-phase (L-G) available short circuit current (AIC) (i.e. utility contribution, available fault current or duty) – Limit.
  - Electrical utility primary X/R (if available) for three-phase and ground faults.
  - Electrical utility motor starting kVA inrush limitations (if any).
- Coordination of security system requirements including contractual roles and responsibilities for installation and integration of the security system. CH2M HILL will coordinate with EMWD-approved security system integrator to begin the process of coordinating security system requirements.
- Coordination of fire detection and notification system requirements. CH2M HILL will contact TYCO (EMWD-approved fire alarm system supplier) to begin the process of coordinating fire alarm system requirements.

11.1.3 Electrical Analysis

The following electrical system analyses will be performed through the duration of the project design:

- Electrical demand and connected load
- Short circuit
- Voltage drop
- Equipment, protective device, conductor, and raceway sizing
- Preliminary protective circuit coordination and ArcFlash classifications for power distribution and motor control equipment
- Preliminary harmonics study
- Lighting illumination, power usage (wattage/square-foot) and control
- The electrical system analysis will be performed using SKM Power Tools for Windows (PTW 32). The lighting analysis will be performed using AGI32 Lighting Analysis Software

11.2 Electrical Codes and Standards

The electrical system design will be based on the most recently published codes and standards in accordance with EMWD directives, as discussed between CH2M and EMWD.

11.2.1 Codes

- 2014 National Electrical Code (NEC)
- 2015 Life Safety Code (NFPA 101 HB85)
- International Fire Code
- 2012 National Electrical Safety Code (IEEE- C2)

11.2.2 Standards

- American National Standards Association (ANSI)
- National Electrical Manufacturers Association (NEMA)
- Institute of Electrical and Electronics Engineers (IEEE)
- Instrument Society of America (ISA)
- Insulated Cable Engineers Association (ICEA)
- California Occupational Safety and Health Administration (Cal-OSHA)
- American Society for Testing and Materials (ASTM)
- Underwriters Laboratories, Inc. (UL)
- National Fire Protection Association (NFPA)
- Illuminating Engineering Society (IES) Lighting Handbook and RP-7 Recommended Practice for Industrial Lighting
- NFPA 780, Standard for the Installation of Lightning Protection Systems

11.2.3 Design Guides

- SCE Electrical Service Requirements (ESRs)
- CH2M Electrical Best Practices

11.2.4 Regulations

- California Title 24

11.3 Utility Power Service

SCE presently provides utility power service to Perris I and Menifee Desalters through a Primary Revenue Meter and pad-mounted switch. CH2M HILL will provide continual updates on utility power service requirements to both SCE and EMWD.

Utility power service will incorporate the installation of primary medium voltage feeders, utility pad-mounted transformer, EMWD service entrance switchboard (SES), grounding, primary and secondary raceways, utility and EMWD metering, surge protection, and trenching in accordance with SCE Electrical Service Requirements.

SCE ESRs identify roles and responsibilities for trenching primary and secondary raceways, site preparation, grounding, and assembly of utility power service equipment.

SCE will install a 12-kV – 480Y/277-volt (V) three-phase outdoor pad-mounted transformer (kVA rating to be determined) to supply 480Y/277 three-phase, four-wire service to an outdoor NEMA 250 Type 3R rated SES.

The SES will be mounted inside an environmentally controlled enclosure supporting equipment longevity and operator maintenance. The SES will incorporate fixed mounted service main and group mounted feeder breakers, utility metering, EMWD metering, transient voltage surge suppression, and a 3-ϕ power protection relay.

The service entrance switchboard will distribute 480V three-phase, three-wire power to central power distribution equipment inside the RO Building, and Finished Water Pump Station. Power distribution equipment will be monitored by the facility SCADA system. SCADA will communicate with Digital Power Meters - mounted inside power distribution and motor control equipment - over a Modbus Network. SCADA system will be programmed to monitor and display: 3-ϕ kW, 3-ϕ kVAR, 3-ϕ and 1-ϕ CURRENT, 3-ϕ and 1-ϕ VOLTAGE, and alarm conditions. SCADA system will also monitor alarm status from Transient Voltage Surge Suppression devices, and power monitoring relays: Note: In the event of a surge, phase loss, under-voltage, over-voltage, or phase-reversal condition, an alarm will be generated at the facility process control system.

11.3.1 Alternative Approach

SCE ESR-3 states that the largest single 480V/277V three-phase secondary electrical service SCE will provide to a customer is 4,000 amps.

Preliminary electrical estimates identify connected loads approaching the 4,000-amp limit. The ultimate connected load - may exceed the 4,000 ampere limitation as set by SCE. In accordance with National Electrical Code, low voltage service equipment will be sized based upon continuous and non-continuous connected loads.

The ultimate operating demand load may be less than 3,000 amperes and based solely on the operating load, SCE may chose to install a single 2,500-kVA transformer. Still, there is the required service rating that may mismatch what the utility may provide. An alternative approach would be to request SCE to provide two (2) secondary electrical services for the proposed PDF II, with utility secondary service conductors routing from two (2) pad mounted transformers to a second service switch (SES).

Note: The installation of a single 4,000-amp service poses the following concerns:

- Fault currents in excess of 65,000 amps RMS symmetrical at power distribution equipment
- Stringent arc flash requirements
- Single point of failure
- Non-coordination of low voltage service entrance breaker and utility low voltage service entrance conductors

The installation of two pad-mounted transformers powering two SESs would mitigate these concerns by dividing the connected load. The two SESs would incorporate kirk-key interlocked fixed main and tie breakers such that connected loads could be operated from either pad-mounted transformer.

11.4 Power Distribution Criteria

The power distribution system will incorporate switchboards, power, and lighting panel boards, and MCCs installed inside the RO Building and Finished Water Pump Station.

The power distribution system will incorporate materials and equipment manufactured within the scope of standards published by UL or standards established by a nationally recognized testing laboratory or other acceptable organization. A summary of the estimated power load is provided in Table 11-1. Table 11-2 provides the electrical system nominal voltages. Table 11-3 lists the electrical system utilization voltages.

Table 11-1 Load Summary

Description	kVA	Amps	pF
Estimated Connected Load (full load)	3,531	4,247	Near Unity
Estimated Future Load (25 percent allowance included above)	513	617	Near Unity
Estimated Demand Load (80 percent of operating)	2,259	2,717	Near Unity
Service Entrance Design		4,000	

Table 11-2 Electrical System Nominal Voltages

Equipment or System	Voltage Phases
Service Primary	12.00 kV, 3-ϕ, 3-wire
Secondary Power	480V, 3-ϕ, 3-wire
Secondary Lighting/Power	208 Y/120 V, 3-ϕ, 4-wire & 120/240 V, 1-ϕ
UPS Output Power	120 V/240 V, 1-ϕ, 3-wire

Table 11-3 Electrical System Utilization Voltages

Equipment or System	Voltage Phases
Interior Lighting	120 V, 1-ϕ
Exterior Lighting	120/240 V, 1-ϕ
Heat Trace	120 V, 1-ϕ
Convenience Outlet	120 V, 1-ϕ
Motor Control	120 V, 1-ϕ
HVAC Equipment	480 V, 3-ϕ
Motors, less than 0.5 horsepower	120 V, 1-ϕ
Motors, 0.5 horsepower and Larger	480 V, 3-ϕ
Instruments	120 V, 1-ϕ

Note: UPS will not provide 120 V, 1-ϕ power to field mounted instruments.

11.4.1 Protective Devices

Power distribution equipment will incorporate the following types of protective devices:

- Fully programmable solid-state insulated case breakers 2,000 amps and above.
- Fully programmable solid state molded case breakers 200 amps and above.

- Adjustable instantaneous trip molded case breakers less than 200 amps and more than 100 amps.
- Fixed trip molded case breakers for less than 100 amps.
- 100 percent rated for 800 amps and above.
- Current limiting breakers (if AIC is above 65,000 amps).
- Transient voltage surge suppressor (TVSS) monitored by the facility SCADA system.
- Digital power monitoring interfacing with the facility SCADA system.
- Power monitoring relays: In the event of a phase loss, under-voltage, over-voltage, unbalance, or phase-reversal condition, the facility process control system will inhibit automatic operation of process equipment and alarm, notifying EMWD of fault condition.
- Current-limiting fuses will be required as part of AFD and reduced-voltage solid-state starter assemblies.

11.4.2 Ground Fault Protection

Power distribution equipment will incorporate the following types of ground fault protection:

- Ground fault zone interlocked protection will be provided on all transformer secondary and service entrance breakers rated 1,000 amps or more, all feeder breakers rated 400 amps or more that are downstream of a circuit breaker equipped with ground fault protection, and motor branch circuit breakers for motors 100 horsepower and more – except motors operated by AFDs that will integrate ground fault protection.
- Ground fault protection provided on motor circuits will be instantaneous tripping type.
- Ground fault circuit interrupter (GFCI) protection, 5-mA protective devices will be installed for all outdoor mounted receptacles and as required by NEC for receptacles located indoors. Protective devices will be installed for all heat trace circuits.

11.4.3 Available Short-Circuit Ratings

Electrical equipment will be coordinated and rated to handle short-circuit fault currents at various points within the power distribution system. Current limiting fusing, where required, will be installed to provide additional protection for electronic equipment including soft starters and AFDs.

11.4.4 Harmonic Distortion

Non-linear loads (AFDs, electronic power supplies, and UPS) within the power distribution system will incorporate harmonic mitigation equipment. All AFDS will incorporate line reactors. Additional active harmonic filtering will be recommended, based upon the completion of preliminary harmonic analysis during final design. Actual active harmonic filtering will be recommended, based upon the completion of harmonic analysis during facility commissioning.

11.4.5 Equipment Construction

Power distribution equipment will incorporate:

- Tinned copper main and ground bus.
- TVSS monitored by the facility SCADA system.
- Digital power monitoring interfacing with the facility SCADA system.
- Power monitoring relays: In the event of a phase loss, under-voltage, over-voltage, or phase-reversal condition, and alarm will be generated at the facility process control system.

Dry-type indoor-mounted transformers will incorporate:

- Copper wound windings.
- Temperature rating 115°C rise.
- 15-kVA and larger transformers will comply with California Title 20 and Title 24.

11.5 Motor Control Criteria

Motor control will incorporate AFDs, combination full-voltage nonreversing (FVNR), full-voltage reversing (FVR), two-speed and reduced-voltage solid-state (RVSS) starters, control stations, and safety switches to operate process and facility motors. Adjustable speed and constant speed applications are summarized in Table 11-4.

Table 11-4 Adjustable Speed and Constant Speed Applications

AS and/or CS Applications	Horsepower Rating
Adjustable-Speed Application	75 horsepower and greater 18-pulse AFDs
Adjustable-Speed Application	Less than 75 horsepower 6-pulse AFDs
Constant-Speed Application	50 horsepower and greater RVSS starters
Constant-Speed Application	Less than 50 horsepower Full voltage starters

11.5.1 Adjustable-Speed Motor Applications

AFDs will be comprised of solid-state electronics, line reactors, current-limiting fuses, electronic overloads, control power transformer, indicating lights, and control switches. Drives will be 18-pulse and 6-pulse, pulse-width modulated. AFDs will incorporate Ethernet communications drivers to support network interface with the SCADA system. Current manufacturers of AFDs approved by EMWD include ABB, Toshiba, and Allen Bradley.

11.5.2 Constant-Speed Motor Applications

Full voltage (across-the-line) combination motor starter assemblies will be comprised of motor circuit protector, thermal overloads, NEMA size contactor, control power transformer, indicating lights, and control switches. FVNR starter assemblies will be hardwired to the SCADA system.

RVSS motor starters will be composed of solid-state electronics with 100 percent speed external ** NEMA bypass contactor(s), current-limiting fuses, thermal magnetic breakers, electronic overloads, control power transformer, indicating lights, and control switches. RVSS motor starters will incorporate Ethernet and or Modbus communications drivers to support network interface with the SCADA system. **RVSS with built-in bypass starters are not recommended, due to lack of operational redundancy in the event of an RVSS failure.

MCCs will incorporate:

- Tinned copper main and ground bus
- NEMA Type 2B with NEMA rated starters, no IEC equivalent allowed
- Thermal-magnetic breakers for mains and feeders, magnetic-only for motor starters
- Electronic overloads, Class 20
- FVNR and RVSS starters

11.5.3 Control and Monitoring

Typical motor control and monitoring will include LOCAL-OFF-REMOTE, ON, OFF, START and STOP and FAIL. With the motor control switch set to LOCAL, the operator will be able to operate the motor manually at the motor starter. With the motor control switch set to REMOTE, the operator may manually START and STOP the motor at the SCADA system and/or allow the PLC to automatically START and STOP motor operation.

- Special motor control and monitoring will include POWER, SPEED, and FAULT.

Disconnect switches will be located as required per NEC Article 430 and Article 440 in proximity to the motor loads for HVAC units.

- Alternating Current Induction Motors.
- AC induction motors will be specified as premium efficient for all locations meeting the requirements of California Title 24 and NEMA standards.
- AC induction motors operated by AFDs will be specified inverter duty rated.
- AC induction motors installed outdoors in direct sunlight will be 50°C rated.
- AC induction motors will be specified for environmental locations.
- AC induction motors located outdoors will be provided with space heaters.
- AC induction motors 10-horsepower and larger will be candidates for the installation of winding thermal protection.
- AC induction motors 250-horsepower and larger and AFD-operated will be candidates for bearing thermal protection.

11.6 Standby Power Distribution Criteria

Standby power distribution in the form of a fixed diesel engine generator will not be provided for PDF II; however, connection for a portable generator will be included.

Specialty systems such as fire alarm and egress lighting will be provided with integrated battery chargers and backup capability.

11.7 UPS System Criteria

UPS systems will incorporate distribution panels, line-interactive UPS, external manual bypass switches, and extended batteries to distribute UPS power to SCADA, security, and select 120V loads. A manual bypass will provide for the manual transfer of loads to non-UPS power in the event of a UPS failure.

UPS systems will be sized to provide 90 minutes of backup power at full operating load. The UPS will be specified to incorporate communications drivers to support Ethernet communications with the SCADA system.

One UPS system will be designed for operation of SCADA, security, telephone, communications, and select 120V loads inside the RO Building and associated process facilities. The RO-UPS system will operate PLC, HMI, SCADA, and network switches and critical instrumentation. The RO-UPS will **not** be designed to operate process equipment such as field mounted instrumentation, valves, motor, heaters, and fans.

A separate rack-mounted UPS will be provided for the rack-mounted server computer and associated equipment. Specifications for this rack-mounted UPS will be provided by EMWD to CH2M HILL.

The fire alarm control panel (FACP) will not be powered by UPS. FACP(s) will be provided with their own backup system (panel-mounted chargers and batteries) to support 90 minutes of backup operation in the event of a power failure in accordance with NFPA 72 and local fire codes.

11.8 General Lighting, Fire/Life Safety Design Criteria

11.8.1 Fire Detection and Notification

Fire detection and notification system design will be based on the installation of a Simplex Grinnell system conforming to the requirements of the Fire Marshall, NFPA, and Factory Mutual, and coordination with the local supplier and integrator.

The fire detection and notification system within the RO and Finished Water Pump Station Buildings will incorporate addressable heat detectors, smoke detectors, manual pull-stations, visual and audible alarms, and sprinkler flow and valve tamper switches networked together.

> *Note: The use of smoke detectors as part of fire detection will be limited to the process chemical areas.*

A Main FACP will be located inside the RO Building to concentrate detection devices and alarms within the building. Two dedicated phone lines will be routed to the Main FACP.

A Remote-FACP will be installed in the Finished Water Pump Station Building to concentrate detection devices and alarms within the electrical room. This Remote-FACP will be networked with the Main-FACP located inside the RO Building.

Fire detection and notification devices will be addressable.

FACPs will be provided with their own backup system (panel-mounted chargers and batteries) to support 90 minutes of backup operation in the event of a power failure in accordance with NFPA 72 and local fire codes.

Contract drawings will incorporate a riser diagram and identify locations of major fire equipment. Fire detection and notification system design will be performance based on final design to be completed by a licensed fire system designer.

11.8.2 Exterior Lighting

Exterior lighting will be designed in accordance with California Title 24 and to enhance security and allow for safe movement at building entrances, along roadways, in parking areas, and along sidewalks. Exterior lighting will be designed to support maintenance, inspection, and operation in outdoor process facilities. Sections of exterior lighting will be photo-electrically and SCADA controlled. The SCADA system will function as a time-clock and allow operators to manually or automatically control sections of exterior lighting from both local and remote locations.

Exterior lighting will consist of the following:

- Wall- and pole-mounted luminaries with LED fixtures
- Wall and anodized poles mounted no higher than 20 feet

11.8.3 Interior Lighting

Interior lighting will be designed in accordance with California Title 24, and to support maintenance, inspection, and operation of indoor process, and control room. Interior lighting will incorporate LED (fixed and dimmable) fixtures.

Interior lighting controls will include motion sensors, manual switches, dimming devices, and SCADA.

Interior lighting will consist of the following:

- LED fixtures will be high-efficiency.
- LED's will have a CRI of 70 or above and an efficacy of 90 or above.
- Process and electrical room area lighting will be enclosed and gasketed, suitable for wet locations.
- Non-process dry area lighting will be suspended ceiling lay-ins, surface mount, and recessed.

Lighting design and lighting placement will take into account accessibility and maintenance, which is of concern to EMWD operational staff, especially for process areas.

Emergency/standby lighting (battery-pack wall-mounted units or luminaries powered by integral battery power) will be installed adjacent to all exterior building doorways, providing 90 minutes of backup lighting facilitating safe egress from building in the event of a power failure. Emergency and exiting lighting units will be provided to facilitate directional egress lighting.

11.9 Lightning Protection Design Criteria

Electrical system design will incorporate power distribution service equipment with low-voltage surge protection in the form of TVSS. TVSS will be monitored by the SCADA system.

Electrical system design will incorporate lightning protection in accordance with NFPA 780, Standard for the Installation of Lightning Protection Systems.

Outdoor mounted instrumentation and signal circuits will incorporate low-voltage surge protection in the form of metal oxide varistors.

11.10 Electrical Material and Methods Design Criteria

The electrical system will incorporate materials and equipment manufactured within the scope of standards published by UL, or standards established by a nationally recognized testing laboratory or other acceptable organization.

Electrical materials and equipment will be selected and approved for their continuous operation within industrial environments and environmental classifications including those listed in Table 11-5.

Table 11-5 Electrical Equipment Material Selection

Environmental Condition	NEMA Rating
Indoor Industrial Dry and Dusty	NEMA 12
Indoor Damp, Non-Wash Down and Noncorrosive	NEMA 4
Indoor Wash-Down and/or Corrosive	NEMA 4X (SST)
Outdoor Wet and Corrosive	NEMA 4X (SST)
Outdoor Wet (Noncorrosive)	NEMA 4X (SST)

Electrical materials and equipment will be de-rated as appropriate for their continuous operation within the environments listed in Table 11-6.

Table 11-6 Electrical Equipment and Material De-Rating

Environmental Condition	Temperature	Altitudes (feet)
Interior Air Conditioned	20°F to 85°F	1,420
Interior Ventilation	20°F to 90°F	1,420
Exterior	20°F to 113°F	1,420

Electrical materials and methods – equipment enclosures, raceways, conductors, and wiring devices - will be selected and approved for environmental conditions including temperature, wet, damp, dust, corrosive, and area of classification.

11.10.1 Raceway Systems

Separate raceway systems (conduits, cable trays, manholes/handholes) will be used to support the installation of the following systems:

- Medium voltage Power
  - 15-kV power distribution
- Low voltage Power
  - 480- V power wiring
  - 120-V power and control wiring
- Process Signal and Communications
  - 24-V direct current discrete and analog control wiring
  - Ethernet, ControlNet, Modbus, and fiber-optic cables
  - Telephone
  - Security
- Specialty Communications
  - Fire Alarm

Raceway criteria will be as follows:

- Concrete encased duct bank for 15-kV and for all ductbanks belowgrade
- PVC conduit for all underground duct bank, with PVC-coated rigid galvanized aluminum (RGA) for underground elbows and risers
- PVC-coated RGA for exposed interior noncorrosive process areas
- RGA for exposed interior noncorrosive non-process areas
- PVC-coated RGA for exterior and corrosive areas
- Electrical metallic tubing for concealed lighting and receptacles within RO Building
- Minimum conduit size 3/4-inch
- Cable tray in electrical and other clean, interior spaces supporting networking cabling
- Concrete trenches in floor of RO Building electrical room extending into process area.
- Conduits associated with each panel inside the electrical room will come out to a floor trench in front of each panel, with permanent tagging (brass tags) and access to process areas, similar to what was installed within the Perris Water Filtration Plant.
- In containment areas, conduits will be located at the top of containment walls and above containment lines.
- Concrete trenches supporting the installation of electrical service cables between pad-mounted transformer and service entrance switchboard(s).
- All raceways will be tagged in accordance with EMWD requirements.

11.10.2 Wire and Cable

- Copper with XHHW-2 and THWN-2 insulation for indoor and outdoor applications.
- Number 12 American Wire Gauge (AWG) minimum for power, Number 14 AWG minimum for control.
- Number 16 AWG minimum for signal.

11.10.3 Fiber-Optic

The electrical system will incorporate empty 3-inch Schedule 40 PVC conduits routed between the RO Building and a fiber-optic manhole at the edge of the Project Site limit. Additional routing of fiber-optic conduits within PDF II in support of networking needs to be coordinated with EMWD. Empty 3-inch Schedule 40 PVC conduits will require the installation of inner ducting at this time. Placement of inner ducting will be determined as part of the fiber-optic design.

The electrical system will incorporate 3-inch Schedule 40 PVC conduits routed between the RO and, Finished Water Pump Station Buildings and facilities in support of the installation of SCADA fiber-optic cables.

11.11 Communication Criteria

The electrical system will incorporate conductor, cables, raceway systems (conduits and trays) to support installation of the following communication systems:

- PLC ControlNet communications
- SCADA Ethernet communications
- Modbus communications with package system flow control valves
- Modbus communications with digital power metering
- AFD Ethernet communications
- RVSS Ethernet or Modbus communications
- UPS Ethernet communications
- Security Ethernet communications

Required telephone (TELCO) lines include:

- Two dedicated lines for FACP – RO Building

The electrical system will incorporate the routing of telephone conduits between the TELCO service point at the property line and telephone management equipment within the RO Building. The TELCO provider for PDF II will be AT&T.

11.12 Submetering

Electronic digital power metering will be installed to monitor sub-feeders of building power distribution and major process loads. Electronic digital power metering equipment will interface with the SCADA system. Existing submeters are Shark200-60-10-V1-D2-PO1S-X.

11.13 Security System

Card access entry, intercom, and closed-caption television surveillance will be provided at the entrance gates with a video monitor in the control room. Card access entry will be provided at building doors. Intrusion detection will be provided for all building exterior doors and easily accessible windows.

Security monitors will be installed inside the SCADA control room. Security hardware will be placed inside the dedicated server room. The server room will be an environmentally controlled room for network servers, switches, security hardware, VOIP equipment, fiber racks, UPS, etc. This will be a secured room requiring special security access.

The location of additional cameras, motion sensors, Knox boxes, and access devices will be coordinated.

11.14 Grounding Criteria

The electrical power distribution system will incorporate a grounding electrode system that integrates a ground ring embedded inside the building footers bonding together metal piping, foundation rebar, and metal framing of structures and power distribution equipment.

- Electrical service neutral and neutrals of derived sources will be bonded to grounding electrode systems.
- TVSS and surge protection devices will be bonded to grounding electrode systems.

- Grounding rings of magnetic flowmeters will bonded to grounding electrode systems.
- Non-current-carrying parts of all electrical equipment, devices, panel boards, and metallic raceways will be bonded to grounding electrode system.
- Non-current-carrying parts of all mechanical equipment, to which electrical components are attached and may potentially become energized, will be bonded to grounding system including building metal structures, handrails, platforms, and stairs.
- All raceways will be provided with equipment grounding conductor.
- Instrumentation shielded conductors will be bonded in one location – process loop power source - for each instrument.
- The lightning protection system will be connected to the grounding electrode system as required by the NEC.

SECTION 12

Preliminary Opinion of Probable Construction Costs

The preliminary design Opinion of Probable Construction Costs (OPCC) for PDF II at the Menifee site is presented in Table 1 and the breakdown of cost components for each facility is presented in Appendix L. The cost opinion is based on October 2015 U.S. dollars ($) (ENR CCI Los Angeles at 11628) and includes labor, materials, equipment, overhead, bonds and insurance, mobilization, and contractor's profit. Costs have been escalated to the midpoint of construction, estimated to be March 2018.

Table 1 lists the PDF II facilities presented in the PDR and includes components such as the architectural treatments for the pre-fabricated buildings, 8-foot perimeter CMU wall, and internal chain link fence and gate requested by Eastern Municipal Water District (EMWD). The total construction cost estimate for the PDF II is $27,062,200 and includes 20 percent contingency and escalation to mid-point of construction.

The preliminary OPCC was prepared in accordance with the guidelines of American Association of Cost Engineers International as a Class 4 estimate, and is defined as follows:

> "This estimate is generally prepared based on available information and subsequently have fairly wide accuracy ranges. They are typically used for preliminary budget approval, determination of feasibility, and concept evaluation. Typically, engineering is from 10 to 30% complete, and would comprise plant capacity, block schematics, preliminary layouts, process flow diagrams for main process systems, and preliminary engineered process. Factoring and other stochastic estimating methods are also used to develop facilities cost. The expected accuracy ranges for this class of estimate are –15% to –30% on the low range side and +20% to +50% on the high range side."

The preliminary OPCC has been prepared for guidance in project evaluation and implementation from the information available at the time of the estimate. The final costs of the project will depend on actual labor and material costs, competitive market conditions, actual site conditions, final project scope, implementation schedule, and other variable factors at the time of bidding and construction of the facility. Therefore, the final project costs may vary from the estimate presented here. Because of these factors, project feasibility, benefit/cost ratios, risks and funding needs must be carefully reviewed prior to making specific financial decisions or establishing project budgets to help ensure that proper project evaluation occurs and adequate funding is obtained.

Table 12-1. Perris II Desalter at Menifee Site Preliminary Opinion of Probable Construction Costs

Facility	Construction Cost
Site Civil / Yard Piping	$2,477,600
Site Preparation	$228,900
Site Grading	$73,200
Earthwork	$22,000
Chain Link Fencing	$48,200
Yard Piping	$371,300
Perimeter Wall	$623,600
Gates	$76,100
Crushed Rock Gravel Surface	$387,000 a
Asphalt Paving	$521,600
Landscaping	$125,700 b
Site Electrical / Control	$662,000
RO Process Building	$4,478,900
RO Process Area	$5,506,900
Chemical Storage Area	$2,535,500
Electrical / Mechanical Room	$733,100
CIP Neutralization	$306,700
Finished Water Pump Station	$1,897,300
Chlorine Contact Tank	$664,800
Brine Discharge Station	$62,200
Fe/Mn Bypass Decarbonator	$306,500
Brine Pump Station Upgrades	$1,346,900
Subtotal	**$20,978,400**
20-Percent Contingency	$4,195,700
TOTAL	**$25,174,100**
Escalation to Mid-point of Construction	$1,888,100
TOTAL	**$27,062,200**

[a] Cost is based on ¾” crushed rock, similar to gravel

[b] Cost is based on 5-gallon trees

Appendix A
Northern and Southern Well Capacity and Well and Blend Water Quality Data

Northern Well Capacities, Well and Blend Water Quality Data

	Unit	Well 76	Well 81	Well 82	Well 83	Well 84	Well 86	Well 87	Well 88	Well 93	Well 94	Well 95	Well 96	Northern Well Blend
Flow	gpm	1,600	750	1,000	750	750	1,300	750	1,000	600	600	2,200	600	11,900
Ammonia as N	mg/L	1.00	1.00	1.00	1.00	1.00	0.50	0.50	0.50	0.50	0.50	0.20	0.20	0.63
Ammonium Ion ($NH4^+$)	mg/L	1.29	1.29	1.29	1.29	1.29	0.64	0.64	0.64	0.64	0.64	0.26	0.26	0.81
Barium	mg/L	0.12	0.36	0.44	0.12	0.06	0.18	0.52	1.10	1.10	0.52	0.06	0.06	0.33
Bicarbonate (HCO3)	mg/L	310	245	245	203	160	119	91.0	159	159	91	260	260	206
Alkalinity as CaCO3	mg/L	254	201	201	166	131	98	75	130	130	75	213	213	169
Boron	mg/L	0.10	0.08	0.10	0.20	0.63	0.50	0.30	0.30	0.30	0.30	1.93	1.93	0.66
Calcium	mg/L	380	148	255	330	280	400	310	330	330	310	87	87	264
Carbonate (CO3)	mg/L	3.0	3.0	3.0	3.0	3.0	3.0	3.0	3.0	3.0	3.0	3.0	3.0	3.0
Chloride	mg/L	748	301	618	1,013	1,503	1,505	1,073	1,010	1,010	1,073	420	420	851
Fluoride	mg/L	0.20	0.20	0.23	0.20	0.13	0.30	0.20	0.20	0.20	0.20	0.23	0.23	0.22
Magnesium	mg/L	110	41.5	64.3	56.5	59.5	110	51.0	82.0	82.0	51	20.0	20.0	64
Nitrate as N	mg/L	7.00	8.50	5.50	7.33	2.93	13.0	8.00	12.0	12.0	8.00	0.6	0.6	6.66
Nitrate Ion ($NO3^-$)	mg/L	31.0	37.6	24.4	32.4	13.0	57.6	35.4	53.1	53.1	35.4	2.6	2.6	29.5
Nitrite as N	mg/L	0.01	0.01	0.01	0.01	0.01	0.01	0.01	0.01	0.01	0.01	0.00	0.00	0.01
Nitrite Ion ($NO2^-$)	mg/L	0.03	0.03	0.03	0.03	0.03	0.03	0.03	0.03	0.03	0.03	0.00	0.00	0.03
pH	pH units	6.80	6.90	7.05	7.48	7.50	6.90	7.10	7.20	7.20	7.10	7.90	7.90	7.12
Potassium	mg/L	6.30	8.90	9.00	9.43	9.98	7.00	11.0	11.0	11.0	11.0	4.1	4.1	7.84
Reactive Silica	mg/L	53.8	50.9	55.4	31.9	23.3	38.0	24.0	37.0	37.0	24.0	25.0	25.0	36
Sodium	mg/L	130	84.3	128	345	750	360	300	180	180	300	300	300	271
Strontium	ug/L	1.48	0.59	1.70	3.00	1.90	2.45	2.23	1.80	1.80	2.23	3.0	3.0	2.16
Sulfate	mg/L	243	41.8	47.3	115	224	130	40.0	16.0	16.0	40	170	170	122
Temperature at Collection	deg C	21.6	21.8	21.4	21.6	21.5	21.3	23.0	22.5	22.5	23	21.0	21.0	22
Iron	ug/L	17	140.0	11.0	13.0	13.0	32.0	16.0	150.0	150.0	16	43.0	43.0	49
Manganese	ug/L	1.5	3.6	1.0	1.0	1.0	1.0	1.0	2.3	2.3	1.0	29.0	29.0	8.0
Total Dissolved Solids	mg/L	2,038	872	1,448	2,290	2,810	2,594	2,026	1,979	1,979	2,026	1,100	1,100	1,810

Southern Well Capacities, Well and Blend Water Quality Data

	Unit	Well 75	Well 85	Southern Well Blend
Flow	gpm	1,000	1,400	2,400
Ammonia as N	mg/L	2.00	1.00	1.42
Ammonium Ion ($NH4^+$)	mg/L	2.57	1.29	1.82
Barium	ug/L	0.10	0.02	0.05
Bicarbonate (HCO3)	mg/L	623	258	410
Alkalinity as CaCO3	mg/L	511	211	336
Boron	mg/L	0.20	0.50	0.38
Calcium	mg/L	290	110	185
Carbonate (CO3)	mg/L	3.0	3.0	3.0
Chloride	mg/L	510	210	335
Fluoride	mg/L	0.30	0.55	0.45
Magnesium	mg/L	120	40.0	73.3
Nitrate as N	mg/L	3.0	2.3	2.59
Nitrate Ion ($NO3^-$)	mg/L	13.3	10.2	11.5
Nitrite as N	mg/L	0.01	0.01	0.01
Nitrite Ion ($NO2^-$)	mg/L	0.03	0.03	0.03
pH	pH units	6.20	6.98	6.37
CO2	mg/L			255
Potassium	mg/L	11.0	4.4	7.1
Reactive Silica	mg/L	67.0	47.4	56
Sodium	mg/L	240	205	220
Strontium	ug/L	1.51	0.51	0.92
Sulfate	mg/L	528	333	414
Temperature	deg C	21.5	21.9	21.7
Iron	ug/L	310	2,090	1,348
Manganese	ug/L	330	290	307
Total Dissolved Solids	mg/L	2,005	1,080	1,465

Appendix B
RO Projections

RO Run 1 – 72 Percent Recovery – New Membranes

BOOSTER PUMP AND PERMEATE THROTTLING(ALL STAGES) WITH TURBO

RO program licensed to:					
Calculation created by:	Ufuk Erdal				
Project name:	Perris II Design Recovery New Membranes Permeate Throttling		Permeate flow:	1013.00	gpm
HP Pump flow:	1406.9	gpm	Raw water flow:	1406.9	gpm
Feed pressure:	124.2	psi	Permeate throttling(All st.)	15.0	psi
Feedwater Temperature:	21.5	C(71F)	Permeate recovery:	72.0	%
Feed water pH:	7.12		Element age:	0.0	years
Chem dose, ppm (100%):	0.0	H2SO4	Flux decline % per year:	7.0	
			Fouling Factor	1.00	
			Salt passage increase, %/yr:	10.0	
Average flux rate:	12.8	gfd	Feed type:	Well Water	

Stage	Perm. Flow	Flow/Vessel Feed	Conc	Flux	Beta	Conc.&Throt. Pressures		Booster Pressure	Element Type	Elem. No.	Array
	gpm	gpm	gpm	gfd		psi	psi	psi			
1-1	719.8	48.5	23.7	13.5	1.10	100.5	15.0		ESPA2 MAX	174	29x6
1-2	293.2	49.1	28.1	11.4	1.07	111.4	15.0	39.6	ESPA2 MAX	84	14x6

	Raw water		Feed water		Permeate		Concentrate	
Ion	mg/l	CaCO3	mg/l	CaCO3	mg/l	CaCO3	mg/l	CaCO3
Ca	266.0	663.3	266.0	663.3	1.715	4.3	945.6	2358.1
Mg	64.0	263.4	64.0	263.4	0.413	1.7	227.5	936.3
Na	270.0	587.0	270.0	587.0	8.290	18.0	943.0	2049.9
K	7.9	10.1	7.9	10.1	0.302	0.4	27.4	35.2
NH4	0.8	2.2	0.8	2.2	0.031	0.1	2.8	7.7
Ba	0.330	0.2	0.330	0.2	0.002	0.0	1.2	0.9
Sr	2.200	2.5	2.200	2.5	0.014	0.0	7.8	8.9
CO3	0.2	0.3	0.2	0.3	0.000	0.0	0.7	1.2
HCO3	206.0	168.9	206.0	168.9	5.260	4.3	722.2	592.0
SO4	121.0	126.0	121.0	126.0	0.434	0.5	431.0	449.0
Cl	857.4	1209.3	857.4	1209.3	12.237	17.3	3030.7	4274.6
F	0.2	0.5	0.2	0.5	0.006	0.0	0.7	1.8
NO3	29.8	24.0	29.8	24.0	3.037	2.4	98.6	79.5
B	0.65		0.65		0.582		0.83	
SiO2	36.0		36.0		0.55		127.16	
CO2	23.61		23.61		23.61		23.61	
TDS	1862.5		1862.5		32.9		6567.2	
pH	7.12		7.12		5.58		7.62	

	Raw water	Feed water	Concentrate
CaSO4 / Ksp * 100:	5%	5%	25%
SrSO4 / Ksp * 100:	3%	3%	13%
BaSO4 / Ksp * 100:	670%	670%	2864%
SiO2 saturation:	31%	31%	103%
Langelier Saturation Index	0.16	0.16	1.71
Stiff & Davis Saturation Index	0.10	0.10	1.37
Ionic strength	0.04	0.04	0.15
Osmotic pressure	16.9 psi	16.9 psi	59.7 psi

Turbine exhaust pressure :	4.4	psi	Turbo Boost Efficiency:	64.5 %
Turbo Boost Pressure:	39.6	psi		

Product performance calculations are based on nominal element performance when operated on a feed water of acceptable quality. The results shown on the printouts produced by this program are estimates of product performance. No guarantee of product or system performance is expressed or implied unless provided in a separate warranty statement signed by an authorized Hydranautics representative. Calculations for chemical consumption are provided for convenience and are based on various assumptions concerning water quality and composition. As the actual amount of chemical needed for pH adjustment is feedwater dependent and not membrane dependent, Hydranautics does not warrant chemical consumption. If a product or system warranty is required, please contact your Hydranautics representative. Non-standard or extended warranties may result in different pricing than previously quoted.

BOOSTER PUMP AND PERMEATE THROTTLING(ALL STAGES) WITH TURBO

RO program licensed to:					
Calculation created by:	Ufuk Erdal				
Project name:	Perris II Design Recovery New Membranes Permeate Throttling		Permeate flow:	1013.00	gpm
HP Pump flow:	1406.9	gpm	Raw water flow:	1406.9	gpm
Feed pressure:	124.2	psi	Permeate throttling(All st.)	15.0	psi
Feedwater Temperature:	21.5	C(71F)	Permeate recovery:	72.0	%
Feed water pH:	7.12		Element age:	0.0	years
Chem dose, ppm (100%):	0.0	H2SO4	Flux decline % per year:	7.0	
			Fouling Factor	1.00	
			Salt passage increase, %/yr:	10.0	
Average flux rate:	12.8	gfd	Feed type:	Well Water	

Stage	Perm. Flow gpm	Flow/Vessel Feed gpm	Conc gpm	Flux gfd	Beta	Conc.&Throt. Pressures psi	psi	Booster Pressure psi	Element Type	Elem. No.	Array
1-1	719.8	48.5	23.7	13.5	1.10	100.5	15.0		ESPA2 MAX	174	29x6
1-2	293.2	49.1	28.1	11.4	1.07	111.4	15.0	39.6	ESPA2 MAX	84	14x6

Stg	Elem no.	Feed pres psi	Pres drop psi	Perm flow gpm	Perm Flux gfd	Beta	Perm sal TDS	Conc osm pres	Cumulative Perm Ion levels Ca	Mg	Cl	B	SiO2
1-1	1	124.2	5.7	5.2	16.9	1.11	11.0	19.0	0.36	0.09	5	0.39	0.16
1-1	2	118.4	4.8	4.7	15.5	1.10	12.0	21.3	0.41	0.10	5	0.42	0.19
1-1	3	113.6	4.1	4.3	14.1	1.10	13.5	23.9	0.47	0.11	6	0.45	0.21
1-1	4	109.5	3.5	3.9	12.8	1.10	15.4	27.0	0.55	0.13	7	0.48	0.24
1-1	5	106.0	3.0	3.5	11.6	1.12	17.7	30.5	0.63	0.15	8	0.51	0.28
1-1	6	103.0	2.5	3.2	10.3	1.10	20.5	34.5	0.74	0.18	9	0.54	0.33
1-2	1	137.2	5.9	4.8	15.6	1.10	21.3	38.4	0.61	0.15	8	0.43	0.27
1-2	2	131.3	5.0	4.2	13.8	1.10	22.8	42.4	0.70	0.17	9	0.46	0.31
1-2	3	126.3	4.4	3.7	12.1	1.09	24.8	46.7	0.81	0.19	10	0.49	0.36
1-2	4	121.9	3.9	3.2	10.5	1.09	27.3	51.1	0.93	0.22	12	0.53	0.42
1-2	5	118.0	3.4	2.7	8.9	1.08	30.2	55.6	1.07	0.26	14	0.55	0.48
1-2	6	114.6	3.1	2.3	7.5	1.07	33.4	60.0	1.23	0.30	16	0.58	0.55

Stage	NDP psi
1-1	72.0
1-2	64.0

Product performance calculations are based on nominal element performance when operated on a feed water of acceptable quality. The results shown on the printouts produced by this program are estimates of product performance. No guarantee of product or system performance is expressed or implied unless provided in a separate warranty statement signed by an authorized Hydranautics representative. Calculations for chemical consumption are provided for convenience and are based on various assumptions concerning water quality and composition. As the actual amount of chemical needed for pH adjustment is feedwater dependent and not membrane dependent, Hydranautics does not warrant chemical consumption. If a product or system warranty is required, please contact your Hydranautics representative. Non-standard or extended warranties may result in different pricing than previously quoted.

BOOSTER PUMP AND PERMEATE THROTTLING(ALL STAGES) WITH TURBO

RO program licensed to:					
Calculation created by:	Ufuk Erdal				
Project name:	Perris II Design Recovery New Membranes Permeate Throttling		Permeate flow:	1013.00	gpm
HP Pump flow:	1406.9	gpm	Raw water flow:	1406.9	gpm
Feed pressure:	124.2	psi	Permeate throttling(All st.)	15.0	psi
Feedwater Temperature:	21.5	C(71F)	Permeate recovery:	72.0	%
Feed water pH:	7.12		Element age:	0.0	years
Chem dose, ppm (100%):	0.0	H2SO4	Flux decline % per year:	7.0	
			Fouling Factor	1.00	
			Salt passage increase, %/yr:	10.0	
Average flux rate:	12.8	gfd	Feed type:	Well Water	

****
**** THE FOLLOWING PARAMETERS EXCEED RECOMMENDED DESIGN LIMITS: ***
****

Concentrate saturation of SiO2 too high (103%)

The following are recommended general guidelines for designing a reverse osmosis system using Hydranautics membrane elements. Please consult Hydranautics for specific recommendations for operation beyond the specified guidelines.

Feed and Concentrate flow rate limits

Element diameter	Maximum feed flow rate	Minimum concentrate rate
8.0 inches	75 gpm (283.9 lpm)	12 gpm (45.4 lpm)
8.0 inches(Full Fit)	75 gpm (283.9 lpm)	30 gpm (113.6 lpm)

Concentrate polarization factor (beta) should not exceed 1.2 for standard elements

Saturation limits for sparingly soluble salts in concentrate

Soluble salt	Saturation
BaSO4	6000%
CaSO4	230%
SrSO4	800%
SiO2	100%

Langelier Saturation Index for concentrate should not exceed 1.8

The above saturation limits only apply when using effective scale inhibitor. Without scale inhibitor, concentrate saturation should not exceed 100%.

Product performance calculations are based on nominal element performance when operated on a feed water of acceptable quality. The results shown on the printouts produced by this program are estimates of product performance. No guarantee of product or system performance is expressed or implied unless provided in a separate warranty statement signed by an authorized Hydranautics representative. Calculations for chemical consumption are provided for convenience and are based on various assumptions concerning water quality and composition. As the actual amount of chemical needed for pH adjustment is feedwater dependent and not membrane dependent, Hydranautics does not warrant chemical consumption. If a product or system warranty is required, please contact your Hydranautics representative. Non-standard or extended warranties may result in different pricing than previously quoted.

RO Run 2 – 72 Percent Recovery – Old Membranes

BOOSTER PUMP AND PERMEATE THROTTLING(ALL STAGES) WITH TURBO

RO program licensed to:						
Calculation created by:						
Project name:	Perris II			Permeate flow:	1013.00	gpm
HP Pump flow:	1406.9	gpm		Raw water flow:	1406.9	gpm
Feed pressure:	150.0	psi		Permeate throttling(All st.)	15.0	psi
Feedwater Temperature:	21.5	C(71F)		Permeate recovery:	72.0	%
Feed water pH:	7.12			Element age:	5.0	years
Chem dose, ppm (100%):	0.0	H2SO4		Flux decline % per year:	7.0	
				Fouling Factor	0.70	
				Salt passage increase, %/yr:	10.0	
Average flux rate:	12.8	gfd		Feed type:	Well Water	

Stage	Perm. Flow gpm	Flow/Vessel Feed gpm	Flow/Vessel Conc gpm	Flux gfd	Beta	Conc.&Throt. Pressures psi	psi	Booster Pressure psi	Element Type	Elem. No.	Array
1-1	687.2	48.5	24.8	12.9	1.12	125.4	15.0		ESPA2 MAX	174	29x6
1-2	325.8	51.4	28.1	12.7	1.10	145.2	15.0	50.0	ESPA2 MAX	84	14x6

	Raw water		Feed water		Permeate		Concentrate	
Ion	mg/l	CaCO3	mg/l	CaCO3	mg/l	CaCO3	mg/l	CaCO3
Ca	266.0	663.3	266.0	663.3	2.430	6.1	943.8	2353.5
Mg	64.0	263.4	64.0	263.4	0.585	2.4	227.1	934.4
Na	270.0	587.0	270.0	587.0	11.701	25.4	934.2	2030.9
K	7.9	10.1	7.9	10.1	0.426	0.5	27.1	34.8
NH4	0.8	2.2	0.8	2.2	0.043	0.1	2.7	7.6
Ba	0.330	0.2	0.330	0.2	0.003	0.0	1.2	0.9
Sr	2.200	2.5	2.200	2.5	0.020	0.0	7.8	8.9
CO3	0.2	0.3	0.2	0.3	0.000	0.0	0.7	1.2
HCO3	206.0	168.9	206.0	168.9	7.430	6.1	716.6	587.4
SO4	121.0	126.0	121.0	126.0	0.617	0.6	430.6	448.5
Cl	857.4	1209.3	857.4	1209.3	17.332	24.4	3017.6	4256.1
F	0.2	0.5	0.2	0.5	0.008	0.0	0.7	1.8
NO3	29.8	24.0	29.8	24.0	4.210	3.4	95.6	77.1
B	0.65		0.65		0.646		0.66	
SiO2	36.0		36.0		0.78		126.58	
CO2	23.61		23.61		23.61		23.61	
TDS	1862.5		1862.5		46.2		6532.8	
pH	7.12		7.12		5.72		7.62	

	Raw water	Feed water	Concentrate
CaSO4 / Ksp * 100:	5%	5%	25%
SrSO4 / Ksp * 100:	3%	3%	13%
BaSO4 / Ksp * 100:	670%	670%	2866%
SiO2 saturation:	31%	31%	103%
Langelier Saturation Index	0.16	0.16	1.70
Stiff & Davis Saturation Index	0.10	0.10	1.36
Ionic strength	0.04	0.04	0.15
Osmotic pressure	16.9 psi	16.9 psi	59.4 psi

Turbine exhaust pressure :	4.4	psi	Turbo Boost Efficiency:	64.8 %
Turbo Boost Pressure:	50.0	psi		

Product performance calculations are based on nominal element performance when operated on a feed water of acceptable quality. The results shown on the printouts produced by this program are estimates of product performance. No guarantee of product or system performance is expressed or implied unless provided in a separate warranty statement signed by an authorized Hydranautics representative. Calculations for chemical consumption are provided for convenience and are based on various assumptions concerning water quality and composition. As the actual amount of chemical needed for pH adjustment is feedwater dependent and not membrane dependent, Hydranautics does not warrant chemical consumption. If a product or system warranty is required, please contact your Hydranautics representative. Non-standard or extended warranties may result in different pricing than previously quoted.

BOOSTER PUMP AND PERMEATE THROTTLING(ALL STAGES) WITH TURBO

RO program licensed to:
Calculation created by:

Project name:	Perris II			Permeate flow:	1013.00	gpm
HP Pump flow:	1406.9	gpm		Raw water flow:	1406.9	gpm
Feed pressure:	150.0	psi		Permeate throttling(All st.)	15.0	psi
Feedwater Temperature:	21.5	C(71F)		Permeate recovery:	72.0	%
Feed water pH:	7.12			Element age:	5.0	years
Chem dose, ppm (100%):	0.0	H2SO4		Flux decline % per year:	7.0	
				Fouling Factor	0.70	
				Salt passage increase, %/yr:	10.0	
Average flux rate:	12.8	gfd		Feed type:	Well Water	

Stage	Perm. Flow gpm	Flow/Vessel Feed gpm	Flow/Vessel Conc gpm	Flux gfd	Beta	Conc.&Throt. Pressures psi	Conc.&Throt. Pressures psi	Booster Pressure psi	Element Type	Elem. No.	Array
1-1	687.2	48.5	24.8	12.9	1.12	125.4	15.0		ESPA2 MAX	174	29x6
1-2	325.8	51.4	28.1	12.7	1.10	145.2	15.0	50.0	ESPA2 MAX	84	14x6

Stg	Elem no.	Feed pres psi	Pres drop psi	Perm flow gpm	Perm Flux gfd	Beta	Perm sal TDS	Conc osm pres	Cumulative Perm Ion levels Ca	Mg	Cl	B	SiO2
1-1	1	150.0	5.8	4.7	15.2	1.09	18.1	18.7	0.60	0.15	8	0.61	0.27
1-1	2	144.2	5.0	4.4	14.3	1.10	19.4	20.8	0.67	0.16	9	0.63	0.30
1-1	3	139.2	4.3	4.1	13.3	1.10	21.3	23.1	0.75	0.18	10	0.64	0.34
1-1	4	134.9	3.7	3.8	12.4	1.11	23.8	25.9	0.85	0.20	11	0.64	0.38
1-1	5	131.2	3.1	3.5	11.6	1.11	26.8	29.1	0.96	0.23	12	0.64	0.43
1-1	6	128.1	2.6	3.3	10.7	1.12	30.4	32.8	1.10	0.26	14	0.65	0.49
1-2	1	172.5	6.3	4.8	15.8	1.09	31.3	36.5	0.94	0.23	12	0.61	0.42
1-2	2	166.2	5.4	4.4	14.5	1.10	33.1	40.3	1.06	0.25	14	0.63	0.47
1-2	3	160.8	4.7	4.0	13.2	1.10	35.7	44.5	1.19	0.29	15	0.64	0.53
1-2	4	156.0	4.1	3.7	12.0	1.10	38.8	49.1	1.35	0.32	17	0.64	0.60
1-2	5	151.9	3.6	3.3	10.9	1.10	42.7	54.2	1.53	0.37	20	0.64	0.68
1-2	6	148.4	3.1	3.0	9.7	1.10	47.1	59.8	1.74	0.42	22	0.65	0.78

Stage	NDP psi
1-1	98.3
1-2	99.8

Product performance calculations are based on nominal element performance when operated on a feed water of acceptable quality. The results shown on the printouts produced by this program are estimates of product performance. No guarantee of product or system performance is expressed or implied unless provided in a separate warranty statement signed by an authorized Hydranautics representative. Calculations for chemical consumption are provided for convenience and are based on various assumptions concerning water quality and composition. As the actual amount of chemical needed for pH adjustment is feedwater dependent and not membrane dependent, Hydranautics does not warrant chemical consumption. If a product or system warranty is required, please contact your Hydranautics representative. Non-standard or extended warranties may result in different pricing than previously quoted.

BOOSTER PUMP AND PERMEATE THROTTLING(ALL STAGES) WITH TURBO

RO program licensed to:					
Calculation created by:					
Project name:	Perris II		Permeate flow:	1013.00	gpm
HP Pump flow:	1406.9	gpm	Raw water flow:	1406.9	gpm
Feed pressure:	150.0	psi	Permeate throttling(All st.)	15.0	psi
Feedwater Temperature:	21.5	C(71F)	Permeate recovery:	72.0	%
Feed water pH:	7.12		Element age:	5.0	years
Chem dose, ppm (100%):	0.0	H2SO4	Flux decline % per year:	7.0	
			Fouling Factor	0.70	
			Salt passage increase, %/yr:	10.0	
Average flux rate:	12.8	gfd	Feed type:	Well Water	

****
**** THE FOLLOWING PARAMETERS EXCEED RECOMMENDED DESIGN LIMITS: ***
****

Concentrate saturation of SiO2 too high (103%)

The following are recommended general guidelines for designing a reverse osmosis system using Hydranautics membrane elements. Please consult Hydranautics for specific recommendations for operation beyond the specified guidelines.

Feed and Concentrate flow rate limits

Element diameter	Maximum feed flow rate	Minimum concentrate rate
8.0 inches	75 gpm (283.9 lpm)	12 gpm (45.4 lpm)
8.0 inches(Full Fit)	75 gpm (283.9 lpm)	30 gpm (113.6 lpm)

Concentrate polarization factor (beta) should not exceed 1.2 for standard elements

Saturation limits for sparingly soluble salts in concentrate

Soluble salt	Saturation
BaSO4	6000%
CaSO4	230%
SrSO4	800%
SiO2	100%

Langelier Saturation Index for concentrate should not exceed 1.8

The above saturation limits only apply when using effective scale inhibitor. Without scale inhibitor, concentrate saturation should not exceed 100%.

Product performance calculations are based on nominal element performance when operated on a feed water of acceptable quality. The results shown on the printouts produced by this program are estimates of product performance. No guarantee of product or system performance is expressed or implied unless provided in a separate warranty statement signed by an authorized Hydranautics representative. Calculations for chemical consumption are provided for convenience and are based on various assumptions concerning water quality and composition. As the actual amount of chemical needed for pH adjustment is feedwater dependent and not membrane dependent, Hydranautics does not warrant chemical consumption. If a product or system warranty is required, please contact your Hydranautics representative. Non-standard or extended warranties may result in different pricing than previously quoted.

RO Run 3 – 75 Percent Recovery – New Membranes

BOOSTER PUMP AND PERMEATE THROTTLING(ALL STAGES) WITH TURBO

RO program licensed to:					
Calculation created by:	Ufuk Erdal				
Project name:	Perris II Design Recovery New Membranes Permeate Throttling		Permeate flow:	1013.00	gpm
HP Pump flow:	1350.7	gpm	Raw water flow:	1350.7	gpm
Feed pressure:	124.4	psi	Permeate throttling(All st.)	15.0	psi
Feedwater Temperature:	21.5	C(71F)	Permeate recovery:	75.0	%
Feed water pH:	7.12		Element age:	0.0	years
Chem dose, ppm (100%):	0.0	H2SO4	Flux decline % per year:	7.0	
			Fouling Factor	1.00	
			Salt passage increase, %/yr:	10.0	
Average flux rate:	12.8	gfd	Feed type:	Well Water	

Stage	Perm. Flow gpm	Flow/Vessel Feed gpm	Flow/Vessel Conc gpm	Flux gfd	Beta	Conc.&Throt. Pressures psi	Conc.&Throt. Pressures psi	Booster Pressure psi	Element Type	Elem. No.	Array
1-1	725.3	46.6	21.6	13.6	1.13	102.6	15.0		ESPA2 MAX	174	29x6
1-2	287.7	44.7	24.1	11.2	1.08	116.6	15.0	38.7	ESPA2 MAX	84	14x6

	Raw water		Feed water		Permeate		Concentrate	
Ion	mg/l	CaCO3	mg/l	CaCO3	mg/l	CaCO3	mg/l	CaCO3
Ca	266.0	663.3	266.0	663.3	1.868	4.7	1058.4	2639.4
Mg	64.0	263.4	64.0	263.4	0.449	1.8	254.7	1048.0
Na	270.0	587.0	270.0	587.0	9.015	19.6	1053.0	2289.0
K	7.9	10.1	7.9	10.1	0.329	0.4	30.6	39.2
NH4	0.8	2.2	0.8	2.2	0.033	0.1	3.1	8.6
Ba	0.330	0.2	0.330	0.2	0.002	0.0	1.3	1.0
Sr	2.200	2.5	2.200	2.5	0.015	0.0	8.8	10.0
CO3	0.2	0.3	0.2	0.3	0.000	0.0	0.8	1.3
HCO3	206.0	168.9	206.0	168.9	5.722	4.7	806.8	661.3
SO4	121.0	126.0	121.0	126.0	0.473	0.5	482.6	502.7
Cl	857.4	1209.3	857.4	1209.3	13.322	18.8	3389.6	4780.9
F	0.2	0.5	0.2	0.5	0.006	0.0	0.8	2.1
NO3	29.8	24.0	29.8	24.0	3.285	2.6	109.3	88.2
B	0.65		0.65		0.583		0.85	
SiO2	36.0		36.0		0.60		142.21	
CO2	23.61		23.61		23.61		23.61	
TDS	1862.5		1862.5		35.7		7342.8	
pH	7.12		7.12		5.62		7.74	

	Raw water	Feed water	Concentrate
CaSO4 / Ksp * 100:	5%	5%	29%
SrSO4 / Ksp * 100:	3%	3%	15%
BaSO4 / Ksp * 100:	670%	670%	3260%
SiO2 saturation:	31%	31%	113%
Langelier Saturation Index	0.16	0.16	1.93
Stiff & Davis Saturation Index	0.10	0.10	1.55
Ionic strength	0.04	0.04	0.16
Osmotic pressure	16.9 psi	16.9 psi	66.8 psi

Turbine exhaust pressure :	4.4	psi	Turbo Boost Efficiency:	63.8 %
Turbo Boost Pressure:	38.7	psi		

Product performance calculations are based on nominal element performance when operated on a feed water of acceptable quality. The results shown on the printouts produced by this program are estimates of product performance. No guarantee of product or system performance is expressed or implied unless provided in a separate warranty statement signed by an authorized Hydranautics representative. Calculations for chemical consumption are provided for convenience and are based on various assumptions concerning water quality and composition. As the actual amount of chemical needed for pH adjustment is feedwater dependent and not membrane dependent, Hydranautics does not warrant chemical consumption. If a product or system warranty is required, please contact your Hydranautics representative. Non-standard or extended warranties may result in different pricing than previously quoted.

BOOSTER PUMP AND PERMEATE THROTTLING(ALL STAGES) WITH TURBO

RO program licensed to:					
Calculation created by:	Ufuk Erdal				
Project name:	Perris II Design Recovery New Membranes Permeate Throttling		Permeate flow:	1013.00	gpm
HP Pump flow:	1350.7	gpm	Raw water flow:	1350.7	gpm
Feed pressure:	124.4	psi	Permeate throttling(All st.)	15.0	psi
Feedwater Temperature:	21.5	C(71F)	Permeate recovery:	75.0	%
Feed water pH:	7.12		Element age:	0.0	years
Chem dose, ppm (100%):	0.0	H2SO4	Flux decline % per year:	7.0	
			Fouling Factor	1.00	
			Salt passage increase, %/yr:	10.0	
Average flux rate:	12.8	gfd	Feed type:	Well Water	

Stage	Perm. Flow gpm	Flow/Vessel Feed gpm	Conc gpm	Flux gfd	Beta	Conc.&Throt. Pressures psi	psi	Booster Pressure psi	Element Type	Elem. No.	Array
1-1	725.3	46.6	21.6	13.6	1.13	102.6	15.0		ESPA2 MAX	174	29x6
1-2	287.7	44.7	24.1	11.2	1.08	116.6	15.0	38.7	ESPA2 MAX	84	14x6

Stg	Elem no.	Feed pres psi	Pres drop psi	Perm flow gpm	Perm Flux gfd	Beta	Perm sal TDS	Conc osm pres	Cumulative Perm Ion levels Ca	Mg	Cl	B	SiO2
1-1	1	124.4	5.4	5.2	17.0	1.11	11.0	19.1	0.36	0.09	5	0.39	0.16
1-1	2	119.0	4.5	4.8	15.6	1.10	12.0	21.5	0.42	0.10	5	0.42	0.19
1-1	3	114.5	3.8	4.4	14.3	1.10	13.6	24.4	0.48	0.11	6	0.44	0.21
1-1	4	110.7	3.2	4.0	13.0	1.13	15.6	27.8	0.55	0.13	7	0.47	0.25
1-1	5	107.5	2.7	3.6	11.7	1.13	18.1	31.8	0.65	0.16	8	0.50	0.29
1-1	6	104.9	2.2	3.2	10.4	1.10	21.2	36.4	0.76	0.18	10	0.53	0.34
1-2	1	138.4	5.1	4.7	15.5	1.11	22.1	40.9	0.65	0.16	8	0.43	0.29
1-2	2	133.3	4.4	4.2	13.7	1.11	23.9	45.7	0.75	0.18	10	0.46	0.34
1-2	3	128.9	3.7	3.6	11.9	1.10	26.3	50.8	0.87	0.21	11	0.49	0.39
1-2	4	125.1	3.2	3.1	10.2	1.10	29.2	56.2	1.00	0.24	13	0.53	0.45
1-2	5	121.9	2.8	2.6	8.6	1.09	32.5	61.7	1.16	0.28	15	0.56	0.52
1-2	6	119.1	2.5	2.2	7.1	1.08	36.3	67.1	1.34	0.32	17	0.58	0.60

Stage	NDP psi
1-1	72.2
1-2	62.8

Product performance calculations are based on nominal element performance when operated on a feed water of acceptable quality. The results shown on the printouts produced by this program are estimates of product performance. No guarantee of product or system performance is expressed or implied unless provided in a separate warranty statement signed by an authorized Hydranautics representative. Calculations for chemical consumption are provided for convenience and are based on various assumptions concerning water quality and composition. As the actual amount of chemical needed for pH adjustment is feedwater dependent and not membrane dependent, Hydranautics does not warrant chemical consumption. If a product or system warranty is required, please contact your Hydranautics representative. Non-standard or extended warranties may result in different pricing than previously quoted.

BOOSTER PUMP AND PERMEATE THROTTLING(ALL STAGES) WITH TURBO

RO program licensed to:					
Calculation created by:	Ufuk Erdal				
Project name:	Perris II Design Recovery New Membranes Permeate Throttling		Permeate flow:	1013.00	gpm
HP Pump flow:	1350.7	gpm	Raw water flow:	1350.7	gpm
Feed pressure:	124.4	psi	Permeate throttling(All st.)	15.0	psi
Feedwater Temperature:	21.5	C(71F)	Permeate recovery:	75.0	%
Feed water pH:	7.12		Element age:	0.0	years
Chem dose, ppm (100%):	0.0	H2SO4	Flux decline % per year:	7.0	
			Fouling Factor	1.00	
			Salt passage increase, %/yr:	10.0	
Average flux rate:	12.8	gfd	Feed type:	Well Water	

****
**** THE FOLLOWING PARAMETERS EXCEED RECOMMENDED DESIGN LIMITS: ***
****

Concentrate saturation of SiO2 too high (113%)
Concentrate Langelier Saturation Index too high (1.93)

The following are recommended general guidelines for designing a reverse osmosis system using Hydranautics membrane elements. Please consult Hydranautics for specific recommendations for operation beyond the specified guidelines.

Feed and Concentrate flow rate limits

Element diameter	Maximum feed flow rate	Minimum concentrate rate
8.0 inches	75 gpm (283.9 lpm)	12 gpm (45.4 lpm)
8.0 inches(Full Fit)	75 gpm (283.9 lpm)	30 gpm (113.6 lpm)

Concentrate polarization factor (beta) should not exceed 1.2 for standard elements

Saturation limits for sparingly soluble salts in concentrate

Soluble salt	Saturation
BaSO4	6000%
CaSO4	230%
SrSO4	800%
SiO2	100%

Langelier Saturation Index for concentrate should not exceed 1.8

The above saturation limits only apply when using effective scale inhibitor.
Without scale inhibitor, concentrate saturation should not exceed 100%.

Product performance calculations are based on nominal element performance when operated on a feed water of acceptable quality. The results shown on the printouts produced by this program are estimates of product performance. No guarantee of product or system performance is expressed or implied unless provided in a separate warranty statement signed by an authorized Hydranautics representative. Calculations for chemical consumption are provided for convenience and are based on various assumptions concerning water quality and composition. As the actual amount of chemical needed for pH adjustment is feedwater dependent and not membrane dependent, Hydranautics does not warrant chemical consumption. If a product or system warranty is required, please contact your Hydranautics representative. Non-standard or extended warranties may result in different pricing than previously quoted.

RO Run 4 – 75 Percent Recovery – Old Membranes

BOOSTER PUMP AND PERMEATE THROTTLING(ALL STAGES) WITH TURBO

RO program licensed to:					
Calculation created by:	Ufuk Erdal				
Project name:	Perris II Design Recovery New Membranes Permeate Throttling		Permeate flow:	1013.00	gpm
HP Pump flow:	1350.7	gpm	Raw water flow:	1350.7	gpm
Feed pressure:	150.4	psi	Permeate throttling(All st.)	15.0	psi
Feedwater Temperature:	21.5	C(71F)	Permeate recovery:	75.0	%
Feed water pH:	7.12		Element age:	5.0	years
Chem dose, ppm (100%):	0.0	H2SO4	Flux decline % per year:	7.0	
			Fouling Factor	0.70	
			Salt passage increase, %/yr:	10.0	
Average flux rate:	12.8	gfd	Feed type:	Well Water	

Stage	Perm. Flow	Flow/Vessel Feed	Conc	Flux	Beta	Conc.&Throt. Pressures		Booster Pressure	Element Type	Elem. No.	Array
	gpm	gpm	gpm	gfd		psi	psi	psi			
1-1	693.2	46.6	22.7	13.0	1.13	127.8	15.0		ESPA2 MAX	174	29x6
1-2	319.8	47.0	24.1	12.5	1.11	149.4	15.0	47.8	ESPA2 MAX	84	14x6

	Raw water		Feed water		Permeate		Concentrate	
Ion	mg/l	CaCO3	mg/l	CaCO3	mg/l	CaCO3	mg/l	CaCO3
Ca	266.0	663.3	266.0	663.3	2.634	6.6	1056.1	2633.7
Mg	64.0	263.4	64.0	263.4	0.634	2.6	254.1	1045.7
Na	270.0	587.0	270.0	587.0	12.665	27.5	1042.0	2265.2
K	7.9	10.1	7.9	10.1	0.461	0.6	30.2	38.7
NH4	0.8	2.2	0.8	2.2	0.047	0.1	3.1	8.5
Ba	0.330	0.2	0.330	0.2	0.003	0.0	1.3	1.0
Sr	2.200	2.5	2.200	2.5	0.022	0.0	8.7	10.0
CO3	0.2	0.3	0.2	0.3	0.000	0.0	0.8	1.3
HCO3	206.0	168.9	206.0	168.9	8.045	6.6	799.9	655.6
SO4	121.0	126.0	121.0	126.0	0.669	0.7	482.0	502.1
Cl	857.4	1209.3	857.4	1209.3	18.787	26.5	3373.2	4757.7
F	0.2	0.5	0.2	0.5	0.009	0.0	0.8	2.0
NO3	29.8	24.0	29.8	24.0	4.522	3.6	105.6	85.2
B	0.65		0.65		0.645		0.66	
SiO2	36.0		36.0		0.84		141.48	
CO2	23.61		23.61		23.61		23.61	
TDS	1862.5		1862.5		50.0		7300.0	
pH	7.12		7.12		5.76		7.74	

	Raw water	Feed water	Concentrate
CaSO4 / Ksp * 100:	5%	5%	29%
SrSO4 / Ksp * 100:	3%	3%	15%
BaSO4 / Ksp * 100:	670%	670%	3261%
SiO2 saturation:	31%	31%	112%
Langelier Saturation Index	0.16	0.16	1.93
Stiff & Davis Saturation Index	0.10	0.10	1.54
Ionic strength	0.04	0.04	0.16
Osmotic pressure	16.9 psi	16.9 psi	66.3 psi

Turbine exhaust pressure :	4.4	psi	Turbo Boost Efficiency:	64.2 %
Turbo Boost Pressure:	47.8	psi		

Product performance calculations are based on nominal element performance when operated on a feed water of acceptable quality. The results shown on the printouts produced by this program are estimates of product performance. No guarantee of product or system performance is expressed or implied unless provided in a separate warranty statement signed by an authorized Hydranautics representative. Calculations for chemical consumption are provided for convenience and are based on various assumptions concerning water quality and composition. As the actual amount of chemical needed for pH adjustment is feedwater dependent and not membrane dependent, Hydranautics does not warrant chemical consumption. If a product or system warranty is required, please contact your Hydranautics representative. Non-standard or extended warranties may result in different pricing than previously quoted.

BOOSTER PUMP AND PERMEATE THROTTLING(ALL STAGES) WITH TURBO

RO program licensed to:					
Calculation created by:	Ufuk Erdal				
Project name:	Perris II Design Recovery New Membranes Permeate Throttling		Permeate flow:	1013.00	gpm
HP Pump flow:	1350.7	gpm	Raw water flow:	1350.7	gpm
Feed pressure:	150.4	psi	Permeate throttling(All st.)	15.0	psi
Feedwater Temperature:	21.5	C(71F)	Permeate recovery:	75.0	%
Feed water pH:	7.12		Element age:	5.0	years
Chem dose, ppm (100%):	0.0	H2SO4	Flux decline % per year:	7.0	
			Fouling Factor	0.70	
			Salt passage increase, %/yr:	10.0	
Average flux rate:	12.8	gfd	Feed type:	Well Water	

Stage	Perm. Flow gpm	Flow/Vessel Feed gpm	Conc gpm	Flux gfd	Beta	Conc.&Throt. Pressures psi	psi	Booster Pressure psi	Element Type	Elem. No.	Array
1-1	693.2	46.6	22.7	13.0	1.13	127.8	15.0		ESPA2 MAX	174	29x6
1-2	319.8	47.0	24.1	12.5	1.11	149.4	15.0	47.8	ESPA2 MAX	84	14x6

Stg	Elem no.	Feed pres psi	Pres drop psi	Perm flow gpm	Perm Flux gfd	Beta	Perm sal TDS	Conc osm pres	Cumulative Perm Ion levels Ca	Mg	Cl	B	SiO2
1-1	1	150.4	5.4	4.7	15.3	1.10	18.1	18.8	0.60	0.15	8	0.60	0.27
1-1	2	145.0	4.7	4.4	14.4	1.10	19.4	21.0	0.67	0.16	9	0.62	0.30
1-1	3	140.4	4.0	4.1	13.5	1.11	21.4	23.6	0.76	0.18	10	0.63	0.34
1-1	4	136.4	3.4	3.8	12.6	1.12	24.0	26.6	0.86	0.21	11	0.64	0.38
1-1	5	133.0	2.8	3.6	11.7	1.12	27.2	30.2	0.98	0.24	13	0.64	0.44
1-1	6	130.2	2.4	3.3	10.8	1.13	31.2	34.5	1.13	0.27	15	0.64	0.51
1-2	1	172.6	5.5	4.8	15.6	1.10	32.3	38.7	0.99	0.24	13	0.60	0.44
1-2	2	167.1	4.7	4.4	14.3	1.10	34.6	43.1	1.12	0.27	14	0.62	0.50
1-2	3	162.4	4.0	4.0	13.0	1.10	37.6	48.0	1.27	0.31	16	0.63	0.57
1-2	4	158.4	3.4	3.6	11.8	1.10	41.4	53.6	1.45	0.35	19	0.64	0.65
1-2	5	154.9	2.9	3.2	10.6	1.10	45.8	59.9	1.65	0.40	21	0.64	0.74
1-2	6	152.0	2.5	2.9	9.3	1.10	51.0	66.8	1.89	0.45	24	0.65	0.84

Stage	NDP psi
1-1	98.9
1-2	97.8

Product performance calculations are based on nominal element performance when operated on a feed water of acceptable quality. The results shown on the printouts produced by this program are estimates of product performance. No guarantee of product or system performance is expressed or implied unless provided in a separate warranty statement signed by an authorized Hydranautics representative. Calculations for chemical consumption are provided for convenience and are based on various assumptions concerning water quality and composition. As the actual amount of chemical needed for pH adjustment is feedwater dependent and not membrane dependent, Hydranautics does not warrant chemical consumption. If a product or system warranty is required, please contact your Hydranautics representative. Non-standard or extended warranties may result in different pricing than previously quoted.

BOOSTER PUMP AND PERMEATE THROTTLING(ALL STAGES) WITH TURBO

RO program licensed to:					
Calculation created by:	Ufuk Erdal				
Project name:	Perris II Design Recovery New Membranes Permeate Throttling		Permeate flow:	1013.00	gpm
HP Pump flow:	1350.7	gpm	Raw water flow:	1350.7	gpm
Feed pressure:	150.4	psi	Permeate throttling(All st.)	15.0	psi
Feedwater Temperature:	21.5	C(71F)	Permeate recovery:	75.0	%
Feed water pH:	7.12		Element age:	5.0	years
Chem dose, ppm (100%):	0.0	H2SO4	Flux decline % per year:	7.0	
			Fouling Factor	0.70	
			Salt passage increase, %/yr:	10.0	
Average flux rate:	12.8	gfd	Feed type:	Well Water	

****
**** THE FOLLOWING PARAMETERS EXCEED RECOMMENDED DESIGN LIMITS: ***
****

Concentrate saturation of SiO2 too high (112%)
Concentrate Langelier Saturation Index too high (1.93)

The following are recommended general guidelines for designing a reverse osmosis system using Hydranautics membrane elements. Please consult Hydranautics for specific recommendations for operation beyond the specified guidelines.

Feed and Concentrate flow rate limits

Element diameter	Maximum feed flow rate	Minimum concentrate rate
8.0 inches	75 gpm (283.9 lpm)	12 gpm (45.4 lpm)
8.0 inches(Full Fit)	75 gpm (283.9 lpm)	30 gpm (113.6 lpm)

Concentrate polarization factor (beta) should not exceed 1.2 for standard elements

Saturation limits for sparingly soluble salts in concentrate

Soluble salt	Saturation
BaSO4	6000%
CaSO4	230%
SrSO4	800%
SiO2	100%

Langelier Saturation Index for concentrate should not exceed 1.8

The above saturation limits only apply when using effective scale inhibitor.
Without scale inhibitor, concentrate saturation should not exceed 100%.

Product performance calculations are based on nominal element performance when operated on a feed water of acceptable quality. The results shown on the printouts produced by this program are estimates of product performance. No guarantee of product or system performance is expressed or implied unless provided in a separate warranty statement signed by an authorized Hydranautics representative. Calculations for chemical consumption are provided for convenience and are based on various assumptions concerning water quality and composition. As the actual amount of chemical needed for pH adjustment is feedwater dependent and not membrane dependent, Hydranautics does not warrant chemical consumption. If a product or system warranty is required, please contact your Hydranautics representative. Non-standard or extended warranties may result in different pricing than previously quoted.

RO Run 5 – 80 Percent Recovery – New Membranes

BOOSTER PUMP AND PERMEATE THROTTLING(ALL STAGES) WITH TURBO

RO program licensed to:					
Calculation created by:	Ufuk Erdal				
Project name:	Perris II 80% Recovery New Membranes		Permeate flow:	1013.00	gpm
HP Pump flow:	1266.3	gpm	Raw water flow:	1266.3	gpm
Feed pressure:	126.3	psi	Permeate throttling(All st.)	15.0	psi
Feedwater Temperature:	21.5	C(71F)	Permeate recovery:	80.0	%
Feed water pH:	7.00		Element age:	0.0	years
Chem dose, ppm (100%):	8.1	H2SO4	Flux decline % per year:	7.0	
			Fouling Factor	1.00	
			Salt passage increase, %/yr:	10.0	
Average flux rate:	12.8	gfd	Feed type:	Well Water	

Stage	Perm. Flow gpm	Flow/Vessel Feed gpm	Flow/Vessel Conc gpm	Flux gfd	Beta	Conc.&Throt. Pressures psi	Conc.&Throt. Pressures psi	Booster Pressure psi	Element Type	Elem. No.	Array
1-1	745.1	43.7	18.0	14.0	1.16	107.5	15.0		ESPA2 MAX	174	29x6
1-2	267.9	37.2	18.1	10.4	1.09	125.6	15.0	36.8	ESPA2 MAX	84	14x6

	Raw water		Feed water		Permeate		Concentrate	
Ion	mg/l	CaCO3	mg/l	CaCO3	mg/l	CaCO3	mg/l	CaCO3
Ca	266.0	663.3	266.0	663.3	2.219	5.5	1321.1	3294.6
Mg	64.0	263.4	64.0	263.4	0.534	2.2	317.9	1308.1
Na	270.0	587.0	270.0	587.0	10.688	23.2	1307.2	2841.8
K	7.9	10.1	7.9	10.1	0.389	0.5	37.9	48.6
NH4	0.8	2.2	0.8	2.2	0.039	0.1	3.8	10.7
Ba	0.330	0.2	0.330	0.2	0.003	0.0	1.6	1.2
Sr	2.200	2.5	2.200	2.5	0.018	0.0	10.9	12.5
CO3	0.2	0.3	0.1	0.1	0.000	0.0	0.4	0.7
HCO3	206.0	168.9	196.0	160.6	6.503	5.3	953.8	781.8
SO4	121.0	126.0	129.0	134.3	0.605	0.6	642.4	669.1
Cl	857.4	1209.3	857.4	1209.3	15.946	22.5	4223.2	5956.6
F	0.2	0.5	0.2	0.5	0.007	0.0	1.0	2.6
NO3	29.8	24.0	29.8	24.0	3.877	3.1	133.5	107.7
B	0.65		0.65		0.584		0.92	
SiO2	36.0		36.0		0.69		177.25	
CO2	23.61		35.54		35.54		35.54	
TDS	1862.5		1860.3		42.1		9133.0	
pH	7.12		7.00		5.49		7.55	

	Raw water	Feed water	Concentrate
CaSO4 / Ksp * 100:	5%	6%	41%
SrSO4 / Ksp * 100:	3%	3%	22%
BaSO4 / Ksp * 100:	670%	713%	4474%
SiO2 saturation:	31%	31%	145%
Langelier Saturation Index	0.16	0.02	1.89
Stiff & Davis Saturation Index	0.10	-0.04	1.42
Ionic strength	0.04	0.04	0.20
Osmotic pressure	16.9 psi	16.9 psi	82.8 psi

Turbine exhaust pressure :	4.4	psi	Turbo Boost Efficiency:	62.4 %
Turbo Boost Pressure:	36.8	psi		

Product performance calculations are based on nominal element performance when operated on a feed water of acceptable quality. The results shown on the printouts produced by this program are estimates of product performance. No guarantee of product or system performance is expressed or implied unless provided in a separate warranty statement signed by an authorized Hydranautics representative. Calculations for chemical consumption are provided for convenience and are based on various assumptions concerning water quality and composition. As the actual amount of chemical needed for pH adjustment is feedwater dependent and not membrane dependent, Hydranautics does not warrant chemical consumption. If a product or system warranty is required, please contact your Hydranautics representative. Non-standard or extended warranties may result in different pricing than previously quoted.

BOOSTER PUMP AND PERMEATE THROTTLING(ALL STAGES) WITH TURBO

RO program licensed to:					
Calculation created by:	Ufuk Erdal				
Project name:	Perris II 80% Recovery New Membranes		Permeate flow:	1013.00	gpm
HP Pump flow:	1266.3	gpm	Raw water flow:	1266.3	gpm
Feed pressure:	126.3	psi	Permeate throttling(All st.)	15.0	psi
Feedwater Temperature:	21.5	C(71F)	Permeate recovery:	80.0	%
Feed water pH:	7.00		Element age:	0.0	years
Chem dose, ppm (100%):	8.1	H2SO4	Flux decline % per year:	7.0	
			Fouling Factor	1.00	
			Salt passage increase, %/yr:	10.0	
Average flux rate:	12.8	gfd	Feed type:	Well Water	

Stage	Perm. Flow gpm	Flow/Vessel Feed gpm	Conc gpm	Flux gfd	Beta	Conc.&Throt. Pressures psi	psi	Booster Pressure psi	Element Type	Elem. No.	Array
1-1	745.1	43.7	18.0	14.0	1.16	107.5	15.0		ESPA2 MAX	174	29x6
1-2	267.9	37.2	18.1	10.4	1.09	125.6	15.0	36.8	ESPA2 MAX	84	14x6

Stg	Elem no.	Feed pres psi	Pres drop psi	Perm flow gpm	Perm Flux gfd	Beta	Perm sal TDS	Conc osm pres	Cumulative Perm Ion levels Ca	Mg	Cl	B	SiO2
1-1	1	126.3	4.9	5.3	17.4	1.12	10.7	19.2	0.36	0.09	5	0.37	0.16
1-1	2	121.5	4.0	4.9	16.0	1.10	11.8	22.0	0.41	0.10	5	0.40	0.18
1-1	3	117.4	3.3	4.5	14.7	1.14	13.5	25.4	0.48	0.11	6	0.43	0.21
1-1	4	114.1	2.7	4.1	13.4	1.15	15.7	29.6	0.56	0.13	7	0.46	0.24
1-1	5	111.4	2.2	3.7	12.0	1.16	18.5	34.6	0.67	0.16	9	0.49	0.29
1-1	6	109.2	1.7	3.2	10.5	1.16	22.3	40.7	0.81	0.20	10	0.52	0.35
1-2	1	141.2	3.9	4.6	15.1	1.13	23.8	46.8	0.73	0.18	9	0.43	0.32
1-2	2	137.3	3.2	4.0	13.2	1.10	26.3	53.3	0.86	0.21	11	0.46	0.37
1-2	3	134.1	2.7	3.4	11.3	1.12	29.5	60.5	1.00	0.24	13	0.49	0.43
1-2	4	131.4	2.3	2.9	9.4	1.12	33.3	68.2	1.16	0.28	15	0.53	0.50
1-2	5	129.2	1.9	2.3	7.5	1.10	37.7	75.8	1.36	0.33	17	0.56	0.58
1-2	6	127.2	1.7	1.8	5.8	1.09	42.9	83.0	1.60	0.38	21	0.58	0.69

Stage	NDP psi
1-1	73.5
1-2	58.7

Product performance calculations are based on nominal element performance when operated on a feed water of acceptable quality. The results shown on the printouts produced by this program are estimates of product performance. No guarantee of product or system performance is expressed or implied unless provided in a separate warranty statement signed by an authorized Hydranautics representative. Calculations for chemical consumption are provided for convenience and are based on various assumptions concerning water quality and composition. As the actual amount of chemical needed for pH adjustment is feedwater dependent and not membrane dependent, Hydranautics does not warrant chemical consumption. If a product or system warranty is required, please contact your Hydranautics representative. Non-standard or extended warranties may result in different pricing than previously quoted.

BOOSTER PUMP AND PERMEATE THROTTLING(ALL STAGES) WITH TURBO

RO program licensed to:					
Calculation created by:	Ufuk Erdal				
Project name:	Perris II 80% Recovery New Membranes		Permeate flow:	1013.00	gpm
HP Pump flow:	1266.3	gpm	Raw water flow:	1266.3	gpm
Feed pressure:	126.3	psi	Permeate throttling(All st.)	15.0	psi
Feedwater Temperature:	21.5	C(71F)	Permeate recovery:	80.0	%
Feed water pH:	7.00		Element age:	0.0	years
Chem dose, ppm (100%):	8.1	H2SO4	Flux decline % per year:	7.0	
			Fouling Factor	1.00	
			Salt passage increase, %/yr:	10.0	
Average flux rate:	12.8	gfd	Feed type:	Well Water	

****
**** THE FOLLOWING PARAMETERS EXCEED RECOMMENDED DESIGN LIMITS: ***
****

Concentrate saturation of SiO2 too high (145%)
Concentrate Langelier Saturation Index too high (1.89)

The following are recommended general guidelines for designing a reverse osmosis system using Hydranautics membrane elements. Please consult Hydranautics for specific recommendations for operation beyond the specified guidelines.

Feed and Concentrate flow rate limits

Element diameter	Maximum feed flow rate	Minimum concentrate rate
8.0 inches	75 gpm (283.9 lpm)	12 gpm (45.4 lpm)
8.0 inches(Full Fit)	75 gpm (283.9 lpm)	30 gpm (113.6 lpm)

Concentrate polarization factor (beta) should not exceed 1.2 for standard elements

Saturation limits for sparingly soluble salts in concentrate

Soluble salt	Saturation
BaSO4	6000%
CaSO4	230%
SrSO4	800%
SiO2	100%

Langelier Saturation Index for concentrate should not exceed 1.8

The above saturation limits only apply when using effective scale inhibitor.
Without scale inhibitor, concentrate saturation should not exceed 100%.

Product performance calculations are based on nominal element performance when operated on a feed water of acceptable quality. The results shown on the printouts produced by this program are estimates of product performance. No guarantee of product or system performance is expressed or implied unless provided in a separate warranty statement signed by an authorized Hydranautics representative. Calculations for chemical consumption are provided for convenience and are based on various assumptions concerning water quality and composition. As the actual amount of chemical needed for pH adjustment is feedwater dependent and not membrane dependent, Hydranautics does not warrant chemical consumption. If a product or system warranty is required, please contact your Hydranautics representative. Non-standard or extended warranties may result in different pricing than previously quoted.

RO Run 6 – 80 Percent Recovery – Old Membranes

BOOSTER PUMP AND PERMEATE THROTTLING(ALL STAGES) WITH TURBO

RO program licensed to:						
Calculation created by:	Ufuk Erdal					
Project name:	Perris II			Permeate flow:	1013.00	gpm
HP Pump flow:	1267.8	gpm		Raw water flow:	1267.8	gpm
Feed pressure:	152.5	psi		Permeate throttling(All st.)	15.0	psi
Feedwater Temperature:	21.5	C(71F)		Permeate recovery:	79.9	%
Feed water pH:	7.00			Element age:	5.0	years
Chem dose, ppm (100%):	8.1	H2SO4		Flux decline % per year:	7.0	
				Fouling Factor	0.70	
				Salt passage increase, %/yr:	10.0	
Average flux rate:	12.8	gfd		Feed type:	Well Water	

Stage	Perm. Flow gpm	Flow/Vessel Feed gpm	Flow/Vessel Conc gpm	Flux gfd	Beta	Conc.&Throt. Pressures psi	Conc.&Throt. Pressures psi	Booster Pressure psi	Element Type	Elem. No.	Array
1-1	709.6	43.7	19.3	13.3	1.16	132.6	15.0		ESPA2 MAX	174	29x6
1-2	303.4	39.9	18.2	11.8	1.10	155.9	15.0	43.5	ESPA2 MAX	84	14x6

	Raw water		Feed water		Permeate		Concentrate	
Ion	mg/l	CaCO3	mg/l	CaCO3	mg/l	CaCO3	mg/l	CaCO3
Ca	266.0	663.3	266.0	663.3	3.060	7.6	1311.2	3269.9
Mg	64.0	263.4	64.0	263.4	0.736	3.0	315.5	1298.3
Na	270.0	587.0	270.0	587.0	14.665	31.9	1285.0	2793.4
K	7.9	10.1	7.9	10.1	0.534	0.7	37.2	47.7
NH4	0.8	2.2	0.8	2.2	0.054	0.2	3.8	10.5
Ba	0.330	0.2	0.330	0.2	0.004	0.0	1.6	1.2
Sr	2.200	2.5	2.200	2.5	0.025	0.0	10.8	12.4
CO3	0.2	0.4	0.1	0.1	0.000	0.0	0.4	0.7
HCO3	206.0	168.9	196.0	160.6	8.931	7.3	939.4	770.0
SO4	121.0	126.0	129.0	134.3	0.836	0.9	638.3	664.9
Cl	857.4	1209.3	857.4	1209.3	21.979	31.0	4178.3	5893.2
F	0.2	0.5	0.2	0.5	0.010	0.0	1.0	2.5
NO3	29.8	24.0	29.8	24.0	5.194	4.2	127.6	102.9
B	0.65		0.65		0.643		0.68	
SiO2	36.0		36.0		0.95		175.34	
CO2	23.60		35.54		35.54		35.54	
TDS	1862.5		1860.3		57.6		9026.1	
pH	7.12		7.00		5.62		7.54	

	Raw water	Feed water	Concentrate
CaSO4 / Ksp * 100:	5%	6%	41%
SrSO4 / Ksp * 100:	3%	3%	21%
BaSO4 / Ksp * 100:	670%	713%	4451%
SiO2 saturation:	31%	31%	144%
Langelier Saturation Index	0.16	0.02	1.88
Stiff & Davis Saturation Index	0.10	-0.04	1.41
Ionic strength	0.04	0.04	0.20
Osmotic pressure	16.9 psi	16.9 psi	81.8 psi

Turbine exhaust pressure :	4.4	psi	Turbo Boost Efficiency:	62.9 %
Turbo Boost Pressure:	43.5	psi		

Product performance calculations are based on nominal element performance when operated on a feed water of acceptable quality. The results shown on the printouts produced by this program are estimates of product performance. No guarantee of product or system performance is expressed or implied unless provided in a separate warranty statement signed by an authorized Hydranautics representative. Calculations for chemical consumption are provided for convenience and are based on various assumptions concerning water quality and composition. As the actual amount of chemical needed for pH adjustment is feedwater dependent and not membrane dependent, Hydranautics does not warrant chemical consumption. If a product or system warranty is required, please contact your Hydranautics representative. Non-standard or extended warranties may result in different pricing than previously quoted.

BOOSTER PUMP AND PERMEATE THROTTLING(ALL STAGES) WITH TURBO

RO program licensed to:						
Calculation created by:	Ufuk Erdal					
Project name:	Perris II			Permeate flow:	1013.00	gpm
HP Pump flow:	1267.8	gpm		Raw water flow:	1267.8	gpm
Feed pressure:	152.5	psi		Permeate throttling(All st.)	15.0	psi
Feedwater Temperature:	21.5	C(71F)		Permeate recovery:	79.9	%
Feed water pH:	7.00			Element age:	5.0	years
Chem dose, ppm (100%):	8.1	H2SO4		Flux decline % per year:	7.0	
				Fouling Factor	0.70	
				Salt passage increase, %/yr:	10.0	
Average flux rate:	12.8	gfd		Feed type:	Well Water	

Stage	Perm. Flow gpm	Flow/Vessel Feed gpm	Conc gpm	Flux gfd	Beta	Conc.&Throt. Pressures psi	psi	Booster Pressure psi	Element Type	Elem. No.	Array
1-1	709.6	43.7	19.3	13.3	1.16	132.6	15.0		ESPA2 MAX	174	29x6
1-2	303.4	39.9	18.2	11.8	1.10	155.9	15.0	43.5	ESPA2 MAX	84	14x6

Stg	Elem no.	Feed pres psi	Pres drop psi	Perm flow gpm	Perm Flux gfd	Beta	Perm sal TDS	Conc osm pres	Cumulative Perm Ion levels Ca	Mg	Cl	B	SiO2
1-1	1	152.5	4.9	4.8	15.6	1.11	17.6	18.9	0.59	0.14	8	0.58	0.26
1-1	2	147.5	4.2	4.5	14.7	1.10	19.0	21.4	0.67	0.16	9	0.60	0.29
1-1	3	143.4	3.5	4.2	13.8	1.13	21.2	24.3	0.76	0.18	10	0.62	0.33
1-1	4	139.9	2.9	3.9	12.9	1.13	24.1	27.9	0.87	0.21	11	0.63	0.38
1-1	5	137.0	2.4	3.7	12.0	1.14	27.7	32.4	1.01	0.24	13	0.63	0.44
1-1	6	134.6	1.9	3.4	11.0	1.16	32.5	37.9	1.19	0.29	15	0.64	0.51
1-2	1	173.2	4.3	4.6	15.1	1.12	34.2	43.3	1.09	0.26	14	0.58	0.47
1-2	2	168.9	3.6	4.2	13.8	1.10	37.4	49.1	1.25	0.30	16	0.61	0.54
1-2	3	165.3	3.0	3.8	12.5	1.10	41.5	55.8	1.44	0.35	19	0.63	0.62
1-2	4	162.3	2.5	3.4	11.2	1.10	46.3	63.6	1.65	0.40	21	0.63	0.71
1-2	5	159.8	2.1	3.0	9.7	1.10	52.1	72.4	1.90	0.46	24	0.64	0.82
1-2	6	157.7	1.7	2.5	8.2	1.10	59.0	82.0	2.21	0.53	28	0.64	0.95

Stage	NDP psi
1-1	100.7
1-2	92.0

Product performance calculations are based on nominal element performance when operated on a feed water of acceptable quality. The results shown on the printouts produced by this program are estimates of product performance. No guarantee of product or system performance is expressed or implied unless provided in a separate warranty statement signed by an authorized Hydranautics representative. Calculations for chemical consumption are provided for convenience and are based on various assumptions concerning water quality and composition. As the actual amount of chemical needed for pH adjustment is feedwater dependent and not membrane dependent, Hydranautics does not warrant chemical consumption. If a product or system warranty is required, please contact your Hydranautics representative. Non-standard or extended warranties may result in different pricing than previously quoted.

BOOSTER PUMP AND PERMEATE THROTTLING(ALL STAGES) WITH TURBO

RO program licensed to:						
Calculation created by:	Ufuk Erdal					
Project name:	Perris II		Permeate flow:		1013.00	gpm
HP Pump flow:	1267.8	gpm	Raw water flow:		1267.8	gpm
Feed pressure:	152.5	psi	Permeate throttling(All st.)		15.0	psi
Feedwater Temperature:	21.5	C(71F)	Permeate recovery:		79.9	%
Feed water pH:	7.00		Element age:		5.0	years
Chem dose, ppm (100%):	8.1	H2SO4	Flux decline % per year:		7.0	
			Fouling Factor		0.70	
			Salt passage increase, %/yr:		10.0	
Average flux rate:	12.8	gfd	Feed type:	Well Water		

****
**** THE FOLLOWING PARAMETERS EXCEED RECOMMENDED DESIGN LIMITS: ***
****

Concentrate saturation of SiO2 too high (144%)
Concentrate Langelier Saturation Index too high (1.88)

The following are recommended general guidelines for designing a reverse osmosis system using Hydranautics membrane elements. Please consult Hydranautics for specific recommendations for operation beyond the specified guidelines.

Feed and Concentrate flow rate limits

Element diameter	Maximum feed flow rate	Minimum concentrate rate
8.0 inches	75 gpm (283.9 lpm)	12 gpm (45.4 lpm)
8.0 inches(Full Fit)	75 gpm (283.9 lpm)	30 gpm (113.6 lpm)

Concentrate polarization factor (beta) should not exceed 1.2 for standard elements

Saturation limits for sparingly soluble salts in concentrate

Soluble salt	Saturation
BaSO4	6000%
CaSO4	230%
SrSO4	800%
SiO2	100%

Langelier Saturation Index for concentrate should not exceed 1.8

The above saturation limits only apply when using effective scale inhibitor.
Without scale inhibitor, concentrate saturation should not exceed 100%.

Product performance calculations are based on nominal element performance when operated on a feed water of acceptable quality. The results shown on the printouts produced by this program are estimates of product performance. No guarantee of product or system performance is expressed or implied unless provided in a separate warranty statement signed by an authorized Hydranautics representative. Calculations for chemical consumption are provided for convenience and are based on various assumptions concerning water quality and composition. As the actual amount of chemical needed for pH adjustment is feedwater dependent and not membrane dependent, Hydranautics does not warrant chemical consumption. If a product or system warranty is required, please contact your Hydranautics representative. Non-standard or extended warranties may result in different pricing than previously quoted.