Appendix C
Northern and Southern Well Blends and Mass Balance Tables

Scenario 1 Southern Well Blend Quality and Mass Balance

	Unit	Well 75	Well 85 and New Well	Well 89	Southern Well Blend	After Fe/Mn Treatment	Perris I and Menifee for Blending No Decarbonatio	Flow to Perris II for Blending No Decarbonation
Flow	gpm	**1,000**	**2,800**	0	3,800	3,648	2,345	1,408
Ammonia as N	mg/L	2.00	1.00	1.00	1.26	1.26	1.26	1.26
Ammonium Ion ($NH4^+$)	mg/L	2.57	1.29	1.29	1.62	1.62	1.62	1.62
Barium	ug/L	0.10	0.02	0.18	0.04	0.04	0.04	0.04
Bicarbonate (HCO3)	mg/L	623	258	200	354	354	354	354
Alkalinity as CaCO3	mg/L	511	211	164	290	290	290	290
Boron	mg/L	0.20	0.50	0.10	0.42	0.42	0.42	0.42
Calcium	mg/L	290	110	117	157	157	157	157
Carbonate (CO3)	mg/L	3.00	3.00	3.00	3.00	3.00	3.00	3.00
Chloride	mg/L	510	210	233	289	289	289	289
Fluoride	mg/L	0.30	0.55	0.20	0.48	0.48	0.48	0.48
Magnesium	mg/L	120	40.0	31.0	61.1	61	61	61
Nitrate as N	mg/L	3.0	2.3	7.9	2.48	2.48	2.48	2.48
Nitrate Ion ($NO3^-$)	mg/L	13.3	10.2	34.9	11.0	11.0	11.0	11.0
Nitrite as N	mg/L	0.01	0.01	0.03	0.01	0.01	0.01	0.01
Nitrite Ion ($NO2^-$)	mg/L	0.03	0.03	0.10	0.03	0.03	0.03	0.03
pH	pH units	6.20	6.98	6.70	6.47	6.47	6.47	6.47
CO2	mg/L				175	175	175	175
Potassium	mg/L	11.0	4.4	4.6	6.1	6.12	6.12	6.12
Reactive Silica	mg/L	67.0	47.4	66.8	53	52.6	52.6	53
Sodium	mg/L	240	205	80	214	214	214	214
Strontium	ug/L	1.51	0.51	0.59	0.77	0.77	0.77	0.77
Sulfate	mg/L	528	333	64.0	384	384	384	384
Temperature	deg C	21.5	21.9	22.0	21.8	21.8	22	22
Iron	ug/L	310	2,090	2,240	1,622	97.3	97	97
Manganese	ug/L	330	290	120	301	18.0	18	18
Total Dissolved Solids	mg/L	**2,005**	**1,080**	**782**	**1,323**	**1,323**	**1,323**	**1,323**

Scenario 1 Northern Well Blend Quality and Overall Mass Balance

	Unit	Well Blend	Flow to the Perris and Menifee	RO Feed Blend	RO Permeate	After Decarb (per Water Pro)	COMBINED WATER Before Stabilization at Perris II	COMBINED WATER After Stabilization at Perris II	CA Primary MCL	CA Secondary MCL
Flow	gpm	11,781	7,440	4,340	3,125	3,125	4,532	4,532	NA	NA
Ammonia as N	mg/L	0.64	0.64	0.64		0.033	0.42	0.42	NSL	NSL
Ammonium Ion ($NH4^+$)	mg/L	0.82	0.82	0.82	0.043	0.043	0.53	0.53	NSL	NSL
Barium	mg/L	0.33	0.33	0.33	0.003	0.003	0.01	0.01	1	1
Bicarbonate (HCO3)	mg/L	206	206	206	7.43	7.43	115	181	NSL	NSL
Alkalinity as CaCO3	mg/L	169	169	169	6.09	6.09	94.3	148	NSL	NSL
Boron	mg/L	0.65	0.65	0.65	0.65	0.65	0.58	0.58	NSL	NSL
Calcium	mg/L	266	266	266	2.43	2.43	50.5	50.5	NSL	NSL
Carbonate (CO3)	mg/L	3.0	3.0	3.0		0	0.93	0.93	NSL	NSL
Chloride	mg/L	855	855	855	17.3	17.3	102	102	NSL	250[a]/500[b]/600[c]
Fluoride	mg/L	0.22	0.22	0.22	0.008	0.008	0.16	0.16	2	NSL
Magnesium	mg/L	64	64	64	0.59	0.59	19.4	19.4	NSL	NSL
Nitrate as N	mg/L	6.72	6.72	6.72		0.00	0.77	0.77	10	NSL
Nitrate Ion ($NO3^-$)	mg/L	29.8	29.8	29.8	4.21	4.21	6.3	6.3	45	NSL
Nitrite as N	mg/L	0.01	0.01	0.01		0	0.00	0.00	1	NSL
Nitrite Ion ($NO2^-$)	mg/L	0.03	0.03	0.03		0	0.01	0.01	NSL	NSL
pH[d]	pH units	7.12	7.12	7.12	5.72	6.71	6.50	7.62	NSL	NSL
CO2	mg/L	22.4	22.4	22.4	23.6	2.35	55.9	4.8	NSL	NSL
Potassium	mg/L	7.88	7.88	7.88	0.43	0.43	2.20	2.2	NSL	NSL
Reactive Silica	mg/L	36	36	36	0.78	0.78	16.9	16.9	NSL	NSL
Sodium	mg/L	270	270	270	11.7	11.7	74.6	74.6	NSL	NSL
Strontium[e]	ug/L	2.15	2.15	2.15	0.02	0.02	0.25	0.3	NSL	NSL
Sulfate	mg/L	121	121	121	0.62	0.62	120	120	NSL	250[a]/500[b]/600[c]
Temperature at Collection	deg C	22	22	22	21.5	21.5	21.5	21.5	NSL	NSL
Iron	ug/L	49	49	49	9.9	9.9	37.0	37.0	NSL	300
Manganese	ug/L	7.78	7.78	7.78	1.6	1.56	6.67	6.7	NSL	50
Total Dissolved Solids	mg/L	1,810	1,810	1,810	46.2	46.2	443	538	NSL	500[a]/1,000[b]/1,500[c]
LSI					-4.39	-3.4	-1.31	0.05		

Table Notes:

[a]Recommended

[b]Upper

[c]Short term

[d]pH has a secondary MCL in Federal Drinking Water Standards

[e]Only radioactive stronium has an MCL.

Scenario 1 – Water Pro Projections for Decarbonating RO Permeate

Water!Pro™

Corrosion Control and Treatment Process Analysis Program - Version 3.05

Step 1: Initial Water Characteristics (1 2 3 4)

Enter initial water characteristics based on laboratory analysis.

System Name:	New RO Perms # 20	Select crystalline form: Calcite / Aragonite / Vaterite		
Source Point:	Well Water			
Date of Sample:	April 2, 2015			
TDS =	46	mg/L	0.00116	mol/L, Ionic Strength
Calcium (Total) =	2.4	mg/L Ca^{2+}	6.07	mg/L as $CaCO_3$
Total Alkalinity =	6.1	mg/L as $CaCO_3$		
pH =	5.72	field pH is recommended		
Water Temperature =	21.5	°C (temp. at which pH was analyzed)		
Field Water Temperature =	21.5	°C (operating temperature at facility)		
Cl^- =	17.3	mg/L	24.4	mg/L as $CaCO_3$
SO_4^{2-} =	0.6	mg/L	0.6	mg/L as $CaCO_3$
Mg^{2+} =	0.6	mg/L	2.4	mg/L as $CaCO_3$

If alkalinity is unknown, then enter target DIC and click **"Find Alk"** button.

Find Alk	Target DIC	mg/L as C	0.0	mg/L as $CaCO_3$

Select water temp. for lead and copper and select **copper** solid(s) for calculations.

(●) Field Temperature
( ) Temperature @ 25C

☑ Cupric Hydroxide
☐ Malachite
☐ Tenorite
☑ Cupric Phosphate

Step 2: Initial Results (Before Chemical Addition)

Theoretical initial water characteristics, corrosion indices & metals after temperature correction.

pH =	5.72		72.2	uS/cm (Electrical Conductivity)
Free Calcium =	2.4	mg/L Ca^{2+}	6.1	mg/L as $CaCO_3$
Acidity =	59.9	mg/L as $CaCO_3$	0.522	mg/L, Atmospheric equilibrium $CO_{2(aq)}$
Carbon Dioxide (CO_2) =	23.57	mg/L as $CO_{2(aq)}$	6.43	mg/L as C, dissolved inorganic carbon
DIC =	66.0	mg/L as $CaCO_3$	7.92	mg/L as C, dissolved inorganic carbon

Corrosion Indices			Recommended
Aggressive Index (AI) =	7.3	Extremely aggressive conditions for asbestos cement piping	>12
Ryznar Index (RI) =	14.49	Tendency to dissolve CaCO3 (for steel piping)	6.5-7.0
Langelier Index, Calcite =	-4.39	Tendency to dissolve CaCO3 (for steel and cast iron piping)	>0
CCPP =	-52.83	mg/L as CaCO3, Calcium Carbonate Precipitation Potential	4-10 mg/L
$B_{H2O} + B_{CO3}$ =	0.236	mM/pH, Buffer intensity from water and carbonate species	
Alk/(Cl^- + SO_4^{2-}) =	0.2	Larson's Ratio for steel and cast iron piping	> 5.0

Copper II at Field Temp. =	181.530	mg/L as copper II at dissolution, Cupric Hydroxide, light blue/blue-green
Lead II at Field Temp. =	6.7472	mg/L as lead II at dissolution, Lead Carbonate (cerussite)
Zinc II at 25C =	2466.08	mg/L of Zinc II at dissolution, Hydrozincite - Basic Zinc Carbonate
pH_{25} =	5.70	pH of water if measured at 25°C

Pb & Cu Guidance — **Click button for Guidance on Lead & Copper Treatment**

Step 3: Chemical Addition: Enter dose for each chemical.

pH and Corrosion Control Adjustment				
$Ca(OH)_2$ (100% hydrated Lime)		mg/L	0.00	mg/L as $CaCO_3$
CaO (100% Quicklime)		mg/L	0.00	mg/L as $CaCO_3$
CaO (85% Quicklime)		mg/L	0.00	mg/L as $CaCO_3$
$CaCO_3$ (Limestone)		mg/L	0.00	mg/L as $CaCO_3$
Soda Ash (Na_2CO_3)		mg/L	0.00	mg/L as $CaCO_3$
Potash (K_2CO_3)		mg/L	0.00	mg/L as $CaCO_3$
Caustic Soda (NaOH)		mg/L	0.00	mg/L as $CaCO_3$
Potassium Hydroxide (KOH)		mg/L	0.00	mg/L as $CaCO_3$
Sodium Bicarbonate ($NaHCO_3$)		mg/L	0.00	mg/L as $CaCO_3$
Orthophosphate as PO_4^{3-}		mg/L	0.00	mg/L as P^-
Acid Addition				
Hydrochloric Acid (HCl)		mg/L	0.00	mg/L as $CaCO_3$
Sulfuric Acid (H_2SO_4)		mg/L	0.00	mg/L as $CaCO_3$
Air Stripping or Recarbonation (pH and Corrosion Adjustment)				
[1]Carbon Dioxide (CO_2) +/-	-21.3	mg/L	-48.44	mg/L as $CaCO_3$

[1]Enter a positive value for recarbonation or negative value for air stripping.

Coagulant Addition

Primary Coagulant				Secondary Coagulant
Aluminum Sulfate*14.3H20				No Secondary Coagulant
Aluminum Sulfate*14.3H20		mg/L	0.00	mg/L as $CaCO_3$
No Secondary Coagulant		mg/L	0.00	mg/L as $CaCO_3$

Disinfectants		
Chlorine Gas (Cl_2)		mg/L as Cl_2
Sodium Hypochlorite (NaOCl)		mg/L as Cl_2
Calcium Hypochlorite ($Ca(OCl)_2$)		mg/L as Cl_2

Other				
Calcium Chloride ($CaCl_2$)		mg/L	0.00	mg/L as $CaCO_3$
Hydrofluosilicic Acid (H_2SiF_6)		mg/L	0.00	mg/L as F^-
Sodium Silicofluoride (Na_2SiF_6)		mg/L	0.00	mg/L as F^-

Copyright © 96-10 Schott Software, all rights reserved.

Published by ChemEVI(757)564-0045phfax7068,WWW

Step 4: Interim Results (After Chemical Addition)

Theoretical interim water characteristics, corrosion indices & metals (before $CaCO_3$ precipitation).

					Recommended
Total Alkalinity =	6.1	mg/L as $CaCO_3$			6.8-8.0 or 8.5-9.3
pH =	6.71	pH of water after chemical addition and before release of CO_2			
Free Calcium =	2.4	mg/L Ca^{2+}	6.1	mg/L as $CaCO_3$	
Total Calcium =	2.4	mg/L Ca^{2+}	6.1	mg/L as $CaCO_3$	
Acidity =	11.5	mg/L as $CaCO_3$			
Carbon Dioxide (CO_2) =	2.39	mg/L as $CO_{2(aq)}$	0.64	mg/L as C	
DIC =	17.6	mg/L as $CaCO_3$	2.11	mg/L C, dissolved inorganic carbon	

Corrosion Indices			Recommended
Aggressive Index (AI) =	8.3	Extremely aggressive conditions for asbestos cement piping	>12
Ryznar Index (RI) =	13.51	Tendency to dissolve CaCO3 (for steel piping)	6.5-7.0
Langelier Index, Calcite =	-3.40	Tendency to dissolve CaCO3 (for steel and cast iron piping)	>0
CCPP =	-10.14	mg/L as $CaCO_3$, Calcium Carbonate Precipitation Potential	4-10 mg/L
$B_{H2O} + B_{CO3} + B_{PO4}$ =	0.086	mM/pH, Buffer intensity from water, carbonate, and PO_4 species	
Alk/(Cl^- + SO_4^{2-}) =	0.2	Larson's Ratio for steel and cast iron piping	> 5.0

Copper II at Field Temp. =	2.177	mg/L as copper II at dissolution, Cupric Hydroxide, light blue/blue-green
Lead II at Field Temp. =	1.0172	mg/L as lead II at dissolution, Lead Carbonate (cerussite)
Zinc II at 25C =	63.77	mg/L of Zinc II at dissolution, Hydrozincite - Basic Zinc Carbonate
pH_{25} =	6.69	pH of water if measured at 25°C

Step 5: Final Results (At Equilibrium): **Theoretical finished water characteristics & metals if $CaCO_3$ precipitation has occurred. (i.e., LI and CCPP=0 and AI =12)**

Final Alkalinity =	N/A	mg/L as $CaCO_3$		
Final pH =	N/A	at water temp =	N/A	°C
Final Calcium (total) =	N/A	mg/L Ca^{2+}	N/A	mg/L as $CaCO_3$
Final Acidity =	N/A	mg/L as $CaCO_3$		
Carbon Dioxide (CO_2) =	N/A	mg/L as $CO_{2(aq)}$	N/A	mg/L as C
Final DIC =	N/A	mg/L as $CaCO_3$	N/A	mg/L as C, dissolved inorganic carbon

Copper II =	N/A	N/A
Lead II =	N/A	N/A
Zinc II at 25C =	N/A	N/A
pH_{25} =	N/A	pH of water if measured at 25°C

Scenario 1- LSI and pH Adjustment for the Finished Water

Water!Pro™

Corrosion Control and Treatment Process Analysis Program - Version 3.05

Step 1: Initial Water Characteristics (1 2 3 4)

Enter initial water characteristics based on laboratory analysis.

System Name:	New RO Perris II 20			
Source Point:	Well Water			
Date of Sample:	April 2, 2015			
TDS =	435	mg/L	0.01087	mol/L, Ionic Strength
Calcium (Total) =	49.5	mg/L Ca^{2+}	123.54	mg/L as $CaCO_3$
Total Alkalinity =	92.5	mg/L as $CaCO_3$		
pH =	6.50	field pH is recommended		
Water Temperature =	21.5	°C (temp. at which pH was analyzed)		
Field Water Temperature =	21.5	°C (operating temperature at facility)		
Cl^- =	100.0	mg/L	141.1	mg/L as $CaCO_3$
SO_4^{2-} =	117.3	mg/L	122.2	mg/L as $CaCO_3$
Mg^{2+} =	19.0	mg/L	78.1	mg/L as $CaCO_3$

Select crystalline form: Calcite, Aragonite, Vaterite

If alkalinity is unknown, then enter target DIC and click **"Find Alk"** button.

Find Alk | Target DIC | | mg/L as C | 0.0 | mg/L as $CaCO_3$

Select water temp. for lead and copper and select **copper** solid(s) for calculations.

- (•) Field Temperature
- ( ) Temperature @ 25C

- [x] Cupric Hydroxide
- [ ] Malachite
- [ ] Tenorite
- [x] Cupric Phosphate

Step 2: Initial Results (Before Chemical Addition)

Theoretical initial water characteristics, corrosion indices & metals after temperature correction.

pH =	6.50		679.3	uS/cm (Electrical Conductivity)
Free Calcium =	44.7	mg/L Ca^{2+}	111.7	mg/L as $CaCO_3$
Acidity =	216.1	mg/L as $CaCO_3$	0.522	mg/L, Atmospheric equilibrium $CO_{2(aq)}$
Carbon Dioxide (CO_2) =	54.37	mg/L as $CO_{2(aq)}$	14.84	mg/L as C, dissolved inorganic carbon
DIC =	308.6	mg/L as $CaCO_3$	37.04	mg/L as C, dissolved inorganic carbon

Corrosion Indices			Recommended
Aggressive Index (AI) =	10.5	Moderately aggressive conditions for asbestos cement piping	>12
Ryznar Index (RI) =	9.12	Tendency to dissolve CaCO3 (for steel piping)	6.5-7.0
Langelier Index, Calcite =	-1.31	Tendency to dissolve CaCO3 (for steel and cast iron piping)	>0
CCPP =	-84.83	mg/L as CaCO3, Calcium Carbonate Precipitation Potential	4-10 mg/L
$B_{H2O} + B_{CO3}$ =	1.706	mM/pH, Buffer intensity from water and carbonate species	
Alk/(Cl^- + SO_4^{2-}) =	0.4	Larson's Ratio for steel and cast iron piping	> 5.0

Copper II at Field Temp. =	12.860	mg/L as copper II at dissolution; Cupric Hydroxide, light blue/blue-green
Lead II at Field Temp. =	0.3251	mg/L as lead II at dissolution; Lead Carbonate (cerussite)
Zinc II at 25C =	41.81	mg/L of Zinc II at dissolution; Zinc Carbonate
pH_{25} =	6.48	pH of water if measured at 25°C

Pb & Cu Guidance — **Click button for Guidance on Lead & Copper Treatment**

Step 3: Chemical Addition: Enter dose for each chemical.

pH and Corrosion Control Adjustment				
$Ca(OH)_2$ (100% hydrated Lime)		mg/L	0.00	mg/L as $CaCO_3$
CaO (100% Quicklime)		mg/L	0.00	mg/L as $CaCO_3$
CaO (85% Quicklime)		mg/L	0.00	mg/L as $CaCO_3$
$CaCO_3$ (Limestone)		mg/L	0.00	mg/L as $CaCO_3$
Soda Ash (Na_2CO_3)		mg/L	0.00	mg/L as $CaCO_3$
Potash (K_2CO_3)		mg/L	0.00	mg/L as $CaCO_3$
Caustic Soda (NaOH)	43.7	mg/L	54.68	mg/L as $CaCO_3$
Potassium Hydroxide (KOH)		mg/L	0.00	mg/L as $CaCO_3$
Sodium Bicarbonate ($NaHCO_3$)		mg/L	0.00	mg/L as $CaCO_3$
Orthophosphate as PO_4^{3-}		mg/L	0.00	mg/L as P^-
Acid Addition				
Hydrochloric Acid (HCl)		mg/L	0.00	mg/L as $CaCO_3$
Sulfuric Acid (H_2SO_4)		mg/L	0.00	mg/L as $CaCO_3$
Air Stripping or Recarbonation (pH and Corrosion Adjustment)				
[1]Carbon Dioxide (CO_2) +/-		mg/L	0.00	mg/L as $CaCO_3$

[1]Enter a positive value for recarbonation or negative value for air stripping.

Coagulant Addition

Primary Coagulant				Secondary Coagulant
Aluminum Sulfate*14.3H20				No Secondary Coagulant
Aluminum Sulfate*14.3H20		mg/L	0.00	mg/L as $CaCO_3$
No Secondary Coagulant		mg/L	0.00	mg/L as $CaCO_3$

Disinfectants		
Chlorine Gas (Cl_2)		mg/L as Cl_2
Sodium Hypochlorite (NaOCl)	2.0	mg/L as Cl_2
Calcium Hypochlorite ($Ca(OCl)_2$)		mg/L as Cl_2

Other				
Calcium Chloride ($CaCl_2$)		mg/L	0.00	mg/L as $CaCO_3$
Hydrofluosilicic Acid (H_2SiF_6)		mg/L	0.00	mg/L as F^-
Sodium Silicofluoride (Na_2SiF_6)		mg/L	0.00	mg/L as F^-

Step 4: Interim Results (After Chemical Addition)

Theoretical interim water characteristics, corrosion indices & metals (before $CaCO_3$ precipitation).

					Recommended
Total Alkalinity =	148.0	mg/L as $CaCO_3$			
pH =	7.67	pH of water after chemical addition and before release of CO_2			6.8-8.0 or 8.5-9.3
Free Calcium =	44.2	mg/L Ca^{2+}	110.4	mg/L as $CaCO_3$	
Total Calcium =	49.5	mg/L Ca^{2+}	123.5	mg/L as $CaCO_3$	
Acidity =	160.7	mg/L as $CaCO_3$			
Carbon Dioxide (CO_2) =	5.94	mg/L as $CO_{2(aq)}$	1.62	mg/L as C	
DIC =	308.6	mg/L as $CaCO_3$	37.04	mg/L C, dissolved inorganic carbon	

Corrosion Indices			Recommended
Aggressive Index (AI) =	11.9	Moderately aggressive conditions for asbestos cement piping	>12
Ryznar Index (RI) =	7.57	Tendency to dissolve CaCO3 (for steel piping)	6.5-7.0
Langelier Index, Calcite =	0.05	Tendency for deposition of CaCO3 (for steel and cast iron piping)	>0
CCPP =	1.36	mg/L as $CaCO_3$, Calcium Carbonate Precipitation Potential	4-10 mg/L
$B_{H2O} + B_{CO3} + B_{PO4}$ =	0.315	mM/pH, Buffer intensity from water, carbonate, and PO_4 species	
Alk/(Cl^- + SO_4^{2-}) =	0.6	Larson's Ratio for steel and cast iron piping	> 5.0

Copper II at Field Temp. =	0.734	mg/L as copper II at dissolution; Cupric Hydroxide, light blue/blue-green
Lead II at Field Temp. =	0.1983	mg/L as lead II at dissolution; Lead Carbonate (cerussite)
Zinc II at 25C =	0.73	mg/L of Zinc II at dissolution; Hydrozincite - Basic Zinc Carbonate
pH_{25} =	7.64	pH of water if measured at 25°C

Step 5: Final Results (At Equilibrium): **Theoretical finished water characteristics & metals if $CaCO_3$ precipitation has occurred. (i.e., LI and CCPP=0 and AI =12)**

Final Alkalinity =	146.6	mg/L as $CaCO_3$		
Final pH =	7.62	at water temp =	21.5	°C
Final Calcium (total) =	48.9	mg/L as Ca^{2+}	122.2	mg/L as $CaCO_3$
Final Acidity =	160.7	mg/L as $CaCO_3$		
Carbon Dioxide (CO_2) =	6.51	mg/L as $CO_{2(aq)}$	1.78	mg/L as C
Final DIC =	307.3	mg/L as $CaCO_3$	36.9	mg/L as C, dissolved inorganic carbon

Copper II at Field Temp. =	0.803	mg/L as copper II at dissolution; Cupric Hydroxide, light blue/blue-green
Lead II at Field Temp. =	0.1987	mg/L as lead II at dissolution; Lead Carbonate (cerussite)
Zinc II at 25C =	0.86	mg/L of Zinc II at dissolution; Hydrozincite - Basic Zinc Carbonate
pH_{25} =	7.60	pH of water if measured at 25°C

Copyright © 96-10 Schott Software, all rights reserved.

Published by ChemSVI (707)664-0945 pH:N060,19N0

Scenario 2 Southern Well Blend Quality and Mass Balance

	Unit	Well 75	Well 85	Southern Well Blend	After Fe/Mn Treatment	Bypass flow from North	Combined Bypass	Flow to Perris II for Blending No Decarbonation
Flow	gpm	1,000	1,400	2,400	2,304	870	3,174	1,190
Ammonia as N	mg/L	2.00	1.00	1.42	1.42	0.61	1.20	1.20
Ammonium Ion ($NH4^+$)	mg/L	2.57	1.29	1.82	1.82	0.79	1.54	1.54
Barium	ug/L	0.10	0.02	0.05	0.05	0.32	0.12	0.12
Bicarbonate (HCO3)	mg/L	623	258	410	410	209	355	355
Alkalinity as CaCO3	mg/L	511	211	336	336	171	291	291
Boron	mg/L	0.20	0.50	0.38	0.38	0.72	0.47	0.47
Calcium	mg/L	290	110	185	185	256	204	204
Carbonate (CO3)	mg/L	3.00	3.00	3.00	3.00	3.00	3.00	3.00
Chloride	mg/L	510	210	335	335	832	471	471
Fluoride	mg/L	0.30	0.55	0.45	0.45	0.22	0.38	0.38
Magnesium	mg/L	120	40.0	73.3	73	62	70.1	70.1
Nitrate as N	mg/L	3.0	2.3	2.59	2.59	6.39	3.63	3.63
Nitrate Ion ($NO3^-$)	mg/L	13.3	10.2	11.5	11.5	28.3	16.1	16.1
Nitrite as N	mg/L	0.01	0.01	0.01	0.01	0.01	0.01	0.01
Nitrite Ion ($NO2^-$)	mg/L	0.03	0.03	0.03	0.03	0.02	0.03	0.03
pH	pH units	6.20	6.98	6.47	6.47	7.12	6.55	6.55
CO2	mg/L			202	202	23	153	153
Potassium	mg/L	11.0	4.4	7.1	7.14	7.68	7.29	7.29
Reactive Silica	mg/L	67.0	47.4	56	55.6	35.8	50.1	50.1
Sodium	mg/L	240	205	220	220	272	234	234
Strontium	ug/L	1.51	0.51	0.92	0.92	2.19	1.27	1.27
Sulfate	mg/L	528	333	414	414	124	335	335
Temperature	deg C	21.5	21.5	21.5	21.5	22	21.5	21.5
Iron	ug/L	310.0	2090	1348	80.9	49	72.2	72
Manganese	ug/L	330.0	290.0	307	18.4	9	15.8	16
Total Dissolved Solids	mg/L	**2,005**	**1,080**	**1,465**	**1,465**	**1,810**	1,560	1,560

Scenario 2 Northern Well Blend Quality and Overall Mass Balance

	Unit	Well Blend	Flow to the Perris and Menifee	RO Feed Blend	RO Permeate	After Decarb (per Water Pro)	COMBINED WATER Before Stabilization at Perris II	COMBINED WATER After Stabilization at Perris II	CA Primary MCL	CA Secondary MCL
Flow	gpm	12,458	7,440	4,340	3,125	3,125	4,315	4,315	NA	NA
Ammonia as N	mg/L	0.61	0.61	0.61		0.033	0.35	0.35	NSL	NSL
Ammonium Ion ($NH4^+$)	mg/L	0.79	0.79	0.79	0.043	0.043	0.46	0.46	NSL	NSL
Barium	mg/L	0.32	0.32	0.32	0.003	0.003	0.04	0.04	1	1
Bicarbonate (HCO3)	mg/L	209	209	209	7.43	7.43	103.3	154	NSL	NSL
Alkalinity as CaCO3	mg/L	171	171	171	6.09	6.09	84.7	126	NSL	NSL
Boron	mg/L	0.72	0.72	0.72	0.65	0.65	0.60	0.60	NSL	NSL
Calcium	mg/L	256	256	256	2.43	2.43	58.2	58.2	NSL	NSL
Carbonate (CO3)	mg/L	3.0	3.0	3.0		0	0.83	0.83	NSL	NSL
Chloride	mg/L	832	832	832	17.3	17.3	142	142	NSL	250[a]/500[b]/600[c]
Fluoride	mg/L	0.22	0.22	0.22	0.008	0.008	0.11	0.11	2	NSL
Magnesium	mg/L	62	62	62	0.59	0.59	19.8	19.8	NSL	NSL
Nitrate as N	mg/L	6.39	6.39	6.39		0.00	1.00	1.00	10	NSL
Nitrate Ion ($NO3^-$)	mg/L	28.3	28.3	28.3	4.21	4.21	7.5	7.5	45	NSL
Nitrite as N	mg/L	0.01	0.01	0.01		0	0.00	0.00	1	NSL
Nitrite Ion ($NO2^-$)	mg/L	0.02	0.02	0.02		0	0.01	0.01	NSL	NSL
pH[d]	pH units	7.12	7.12	7.12	5.72	6.71	6.58	7.61	NSL	NSL
CO2	mg/L	22.7	22.7	22.7	23.6	2.35	43.9	4.8	NSL	NSL
Potassium	mg/L	7.68	7.68	7.68	0.43	0.43	2.32	2.3	NSL	NSL
Reactive Silica	mg/L	36	36	36	0.78	0.78	14.4	14.4	NSL	NSL
Sodium	mg/L	272	272	272	11.7	11.7	73.0	73.0	NSL	NSL
Strontium[e]	ug/L	2.19	2.19	2.19	0.02	0.02	0.37	0.4	NSL	NSL
Sulfate	mg/L	124	124	124	0.62	0.62	93	93	NSL	250[a]/500[b]/600[c]
Temperature at Collection	deg C	22	22	22	21.5	21.5	21.5	21.5	NSL	NSL
Iron	ug/L	49	49	49	9.8	9.8	27.0	27.0	NSL	300
Manganese	ug/L	8.93	8.93	8.93	1.8	1.79	5.65	5.7	NSL	50
Total Dissolved Solids	mg/L	1,810	1,810	1,810	46.2	46.2	464	537	NSL	500[a]/1,000[b]/1,500[c]
LSI					-4.39	-3.4	-1.2	0.05		

Table Notes:

[a]Recommended

[b]Upper

[c]Short term

[d]pH has a secondary MCL in Federal Drinking Water Standards

[e]Only radioactive stronium has an MCL.

Scenario 2 – Water Pro Projections for Decarbonating RO Permeate

WaterPro™

Corrosion Control and Treatment Process Analysis Program - Version 3.05

Step 1: Initial Water Characteristics (1 2 3 4)

Enter initial water characteristics based on laboratory analysis.

System Name:	New RO Perms # 20			
Source Point:	Well Water			
Date of Sample:	April 2, 2015			
Select crystalline form:	Calcite / Aragonite / Vaterite			
TDS =	46	mg/L	0.00116	mol/L, Ionic Strength
Calcium (Total) =	2.4	mg/L Ca^{2+}	6.07	mg/L as $CaCO_3$
Total Alkalinity =	6.1	mg/L as $CaCO_3$		
pH =	5.72	field pH is recommended		
Water Temperature =	21.5	°C (temp. at which pH was analyzed)		
Field Water Temperature =	21.5	°C (operating temperature at facility)		
Cl^- =	17.3	mg/L	24.4	mg/L as $CaCO_3$
SO_4^{2-} =	0.6	mg/L	0.6	mg/L as $CaCO_3$
Mg^{2+} =	0.6	mg/L	2.4	mg/L as $CaCO_3$

If alkalinity is unknown, then enter target DIC and click **"Find Alk"** button.

Find Alk	Target DIC	mg/L as C	0.0	mg/L as $CaCO_3$

Select water temp. for lead and copper and select **copper** solid(s) for calculations.

- (●) Field Temperature
- ( ) Temperature @ 25C

- [x] Cupric Hydroxide
- [ ] Malachite
- [ ] Tenorite
- [x] Cupric Phosphate

Step 2: Initial Results (Before Chemical Addition)

Theoretical initial water characteristics, corrosion indices & metals after temperature correction.

pH =	5.72		72.2	uS/cm (Electrical Conductivity)
Free Calcium =	2.4	mg/L Ca^{2+}	6.1	mg/L as $CaCO_3$
Acidity =	59.9	mg/L as $CaCO_3$	0.522	mg/L, Atmospheric equilibrium $CO_{2(aq)}$
Carbon Dioxide (CO_2) =	23.57	mg/L as $CO_{2(aq)}$	6.43	mg/L as C, dissolved inorganic carbon
DIC =	66.0	mg/L as $CaCO_3$	7.92	mg/L as C, dissolved inorganic carbon

Corrosion Indices			Recommended
Aggressive Index (AI) =	7.3	Extremely aggressive conditions for asbestos cement piping	>12
Ryznar Index (RI) =	14.49	Tendency to dissolve CaCO3 (for steel piping)	6.5-7.0
Langelier Index, Calcite =	-4.39	Tendency to dissolve CaCO3 (for steel and cast iron piping)	>0
CCPP =	-52.83	mg/L as CaCO3, Calcium Carbonate Precipitation Potential	4-10 mg/L
$B_{H2O} + B_{CO3}$ =	0.236	mM/pH, Buffer intensity from water and carbonate species	
Alk/(Cl^- + SO_4^{2-}) =	0.2	Larson's Ratio for steel and cast iron piping	> 5.0

Copper II at Field Temp. =	181.530	mg/L as copper II at dissolution, Cupric Hydroxide, light blue/blue-green
Lead II at Field Temp. =	6.7472	mg/L as lead II at dissolution, Lead Carbonate (cerussite)
Zinc II at 25C =	2466.08	mg/L of Zinc II at dissolution, Hydrozincite - Basic Zinc Carbonate
pH_{25} =	5.70	pH of water if measured at 25°C

Pb & Cu Guidance — Click button for Guidance on Lead & Copper Treatment

Step 3: Chemical Addition: Enter dose for each chemical.

pH and Corrosion Control Adjustment				
$Ca(OH)_2$ (100% hydrated Lime)		mg/L	0.00	mg/L as $CaCO_3$
CaO (100% Quicklime)		mg/L	0.00	mg/L as $CaCO_3$
CaO (85% Quicklime)		mg/L	0.00	mg/L as $CaCO_3$
$CaCO_3$ (Limestone)		mg/L	0.00	mg/L as $CaCO_3$
Soda Ash (Na_2CO_3)		mg/L	0.00	mg/L as $CaCO_3$
Potash (K_2CO_3)		mg/L	0.00	mg/L as $CaCO_3$
Caustic Soda (NaOH)		mg/L	0.00	mg/L as $CaCO_3$
Potassium Hydroxide (KOH)		mg/L	0.00	mg/L as $CaCO_3$
Sodium Bicarbonate ($NaHCO_3$)		mg/L	0.00	mg/L as $CaCO_3$
Orthophosphate as PO_4^{3-}		mg/L	0.00	mg/L as P^-
Acid Addition				
Hydrochloric Acid (HCl)		mg/L	0.00	mg/L as $CaCO_3$
Sulfuric Acid (H_2SO_4)		mg/L	0.00	mg/L as $CaCO_3$
Air Stripping or Recarbonation (pH and Corrosion Adjustment)				
[1]Carbon Dioxide (CO_2) +/-	-21.3	mg/L	-48.44	mg/L as $CaCO_3$

[1]Enter a positive value for recarbonation or negative value for air stripping.

Coagulant Addition

Primary Coagulant				Secondary Coagulant
Aluminum Sulfate*14.3H20				No Secondary Coagulant
Aluminum Sulfate*14.3H20		mg/L	0.00	mg/L as $CaCO_3$
No Secondary Coagulant		mg/L	0.00	mg/L as $CaCO_3$

Disinfectants		
Chlorine Gas (Cl_2)		mg/L as Cl_2
Sodium Hypochlorite (NaOCl)		mg/L as Cl_2
Calcium Hypochlorite ($Ca(OCl)_2$)		mg/L as Cl_2

Other				
Calcium Chloride ($CaCl_2$)		mg/L	0.00	mg/L as $CaCO_3$
Hydrofluosilicic Acid (H_2SiF_6)		mg/L	0.00	mg/L as F^-
Sodium Silicofluoride (Na_2SiF_6)		mg/L	0.00	mg/L as F^-

Copyright © 96-10 Schott Software, all rights reserved.

Published by ChemEVI 757/864-0845/phfr7000,WWW

Step 4: Interim Results (After Chemical Addition)

Theoretical interim water characteristics, corrosion indices & metals (before $CaCO_3$ precipitation).

					Recommended
Total Alkalinity =	6.1	mg/L as $CaCO_3$			6.8-8.0 or 8.5-9.3
pH =	6.71	pH of water after chemical addition and before release of CO_2			
Free Calcium =	2.4	mg/L Ca^{2+}	6.1	mg/L as $CaCO_3$	
Total Calcium =	2.4	mg/L Ca^{2+}	6.1	mg/L as $CaCO_3$	
Acidity =	11.5	mg/L as $CaCO_3$			
Carbon Dioxide (CO_2) =	2.36	mg/L as $CO_{2(aq)}$	0.64	mg/L as C	
DIC =	17.6	mg/L as $CaCO_3$	2.11	mg/L C, dissolved inorganic carbon	

Corrosion Indices			Recommended
Aggressive Index (AI) =	8.3	Extremely aggressive conditions for asbestos cement piping	>12
Ryznar Index (RI) =	13.51	Tendency to dissolve CaCO3 (for steel piping)	6.5-7.0
Langelier Index, Calcite =	-3.40	Tendency to dissolve CaCO3 (for steel and cast iron piping)	>0
CCPP =	-10.14	mg/L as $CaCO_3$, Calcium Carbonate Precipitation Potential	4-10 mg/L
$B_{H2O} + B_{CO3} + B_{PO4}$ =	0.086	mM/pH, Buffer intensity from water, carbonate, and PO_4 species	
Alk/(Cl^- + SO_4^{2-}) =	0.2	Larson's Ratio for steel and cast iron piping	> 5.0

Copper II at Field Temp. =	2.177	mg/L as copper II at dissolution, Cupric Hydroxide, light blue/blue-green
Lead II at Field Temp. =	1.0172	mg/L as lead II at dissolution, Lead Carbonate (cerussite)
Zinc II at 25C =	63.77	mg/L of Zinc II at dissolution, Hydrozincite - Basic Zinc Carbonate
pH_{25} =	6.69	pH of water if measured at 25°C

Step 5: Final Results (At Equilibrium): Theoretical finished water characteristics & metals if $CaCO_3$ precipitation has occurred. (i.e., LI and CCPP=0 and AI =12)

Final Alkalinity =	N/A	mg/L as $CaCO_3$		
Final pH =	N/A	at water temp =	N/A	°C
Final Calcium (total) =	N/A	mg/L as Ca^{2+}	N/A	mg/L as $CaCO_3$
Final Acidity =	N/A	mg/L as $CaCO_3$		
Carbon Dioxide (CO_2) =	N/A	mg/L as $CO_{2(aq)}$	N/A	mg/L as C
Final DIC =	N/A	mg/L as $CaCO_3$	N/A	mg/L as C, dissolved inorganic carbon

Copper II =	N/A	N/A
Lead II =	N/A	N/A
Zinc II at 25C =	N/A	N/A
pH_{25} =	N/A	pH of water if measured at 25°C

Scenario 2- LSI and pH Adjustment for the Finished Water

Step 1: Initial Water Characteristics (1) (2) (3) (4)

Enter initial water characteristics based on laboratory analysis.

System Name:	Perns II			Select crystalline form: Calcite / Aragonite / Vaterite
Source Point:	75 and 85 2.9 mgd bypas			
Date of Sample:	August 11, 1999			
TDS =	464	mg/L	0.01159	mol/L, Ionic Strength
Calcium (Total) =	58.0	mg/L Ca^{2+}	144.84	mg/L as $CaCO_3$
Total Alkalinity =	84.7	mg/L as $CaCO_3$		
pH =	6.57	field pH is recommended		
Water Temperature =	21.5	°C (temp. at which pH was analyzed)		
Field Water Temperature =	21.5	°C (operating temperature at facility)		
Cl^- =	142.4	mg/L	201.0	mg/L as $CaCO_3$
SO_4^{2-} =	92.8	mg/L	96.7	mg/L as $CaCO_3$
Mg^{2+} =	19.8	mg/L	81.6	mg/L as $CaCO_3$

If alkalinity is unknown, then enter target DIC and click **"Find Alk"** button.

Find Alk — Target DIC: mg/L as C 0.0 mg/L as $CaCO_3$

Select water temp. for lead and copper and select **copper** solid(s) for calculations.

- (●) Field Temperature
- ( ) Temperature @ 25C

- [x] Cupric Hydroxide
- [ ] Malachite
- [ ] Tenorite
- [x] Cupric Phosphate

Step 2: Initial Results (Before Chemical Addition)

Theoretical initial water characteristics, corrosion indices & metals after temperature correction.

pH =	6.57		724.5	uS/cm (Electrical Conductivity)
Free Calcium =	53.6	mg/L Ca^{2+}	133.8	mg/L as $CaCO_3$
Acidity =	181.2	mg/L as $CaCO_3$	0.522	mg/L, Atmospheric equilibrium $CO_{2(aq)}$
Carbon Dioxide (CO_2) =	42.46	mg/L as $CO_{2(aq)}$	11.59	mg/L as C, dissolved inorganic carbon
DIC =	265.9	mg/L as $CaCO_3$	31.91	mg/L as C, dissolved inorganic carbon

Corrosion Indices			Recommended
Aggressive Index (AI) =	10.6	Moderately aggressive conditions for asbestos cement piping	>12
Ryznar Index (RI) =	8.99	Tendency to dissolve CaCO3 (for steel piping)	6.5-7.0
Langelier Index, Calcite =	-1.21	Tendency to dissolve CaCO3 (for steel and cast iron piping)	>0
CCPP =	-67.76	mg/L as CaCO3, Calcium Carbonate Precipitation Potential	4-10 mg/L
$B_{H2O} + B_{CO3}$ =	1.416	mM/pH, Buffer intensity from water and carbonate species	
Alk/(Cl^- + SO_4^{2-}) =	0.3	Larson's Ratio for steel and cast iron piping	> 5.0

Copper II at Field Temp. =	9.757	mg/L as copper II at dissolution; Cupric Hydroxide, light blue/blue-green
Lead II at Field Temp. =	0.3163	mg/L as lead II at dissolution; Lead Carbonate (cerussite)
Zinc II at 25C =	39.65	mg/L of Zinc II at dissolution; Zinc Carbonate
pH_{25} =	6.55	pH of water if measured at 25°C

Pb & Cu Guidance — Click button for Guidance on Lead & Copper Treatment

Step 3: Chemical Addition: Enter dose for each chemical.

pH and Corrosion Control Adjustment				
$Ca(OH)_2$ (100% hydrated Lime)		mg/L	0.00	mg/L as $CaCO_3$
CaO (100% Quicklime)		mg/L	0.00	mg/L as $CaCO_3$
CaO (85% Quicklime)		mg/L	0.00	mg/L as $CaCO_3$
$CaCO_3$ (Limestone)		mg/L	0.00	mg/L as $CaCO_3$
Soda Ash (Na_2CO_3)		mg/L	0.00	mg/L as $CaCO_3$
Potash (K_2CO_3)		mg/L	0.00	mg/L as $CaCO_3$
Caustic Soda (NaOH)	33.6	mg/L	41.92	mg/L as $CaCO_3$
Potassium Hydroxide (KOH)		mg/L	0.00	mg/L as $CaCO_3$
Sodium Bicarbonate ($NaHCO_3$)		mg/L	0.00	mg/L as $CaCO_3$
Orthophosphate as PO_4^{3-}		mg/L	0.00	mg/L as P^-
Acid Addition				
Hydrochloric Acid (HCl)		mg/L	0.00	mg/L as $CaCO_3$
Sulfuric Acid (H_2SO_4)		mg/L	0.00	mg/L as $CaCO_3$
Air Stripping or Recarbonation (pH and Corrosion Adjustment)				
†Carbon Dioxide (CO_2) +/-		mg/L	0.00	mg/L as $CaCO_3$

†Enter a positive value for recarbonation or negative value for air stripping.

Coagulant Addition

Primary Coagulant				Secondary Coagulant
Aluminum Sulfate*14.3H20				No Secondary Coagulant
Aluminum Sulfate*14.3H20		mg/L	0.00	mg/L as $CaCO_3$
No Secondary Coagulant		mg/L	0.00	mg/L as $CaCO_3$

Disinfectants		
Chlorine Gas (Cl_2)		mg/L as Cl_2
Sodium Hypochlorite (NaOCl)	2.0	mg/L as Cl_2
Calcium Hypochlorite ($Ca(OCl)_2$)		mg/L as Cl_2

Other				
Calcium Chloride ($CaCl_2$)		mg/L	0.00	mg/L as $CaCO_3$
Hydrofluosilicic Acid (H_2SiF_6)		mg/L	0.00	mg/L as F^-
Sodium Silicofluoride (Na_2SiF_6)		mg/L	0.00	mg/L as F^-

Step 4: Interim Results (After Chemical Addition)

Theoretical interim water characteristics, corrosion indices & metals (before $CaCO_3$ precipitation).

					Recommended
Total Alkalinity =	127.4	mg/L as $CaCO_3$			
pH =	7.66	pH of water after chemical addition and before release of CO_2			6.8-8.0 or 8.5-9.3
Free Calcium =	53.0	mg/L Ca^{2+}	132.5	mg/L as $CaCO_3$	
Total Calcium =	58.0	mg/L Ca^{2+}	144.8	mg/L as $CaCO_3$	
Acidity =	138.5	mg/L as $CaCO_3$			
Carbon Dioxide (CO_2) =	5.20	mg/L as $CO_{2(aq)}$	1.42	mg/L as C	
DIC =	265.9	mg/L as $CaCO_3$	31.91	mg/L C, dissolved inorganic carbon	

Corrosion Indices			Recommended
Aggressive Index (AI) =	11.9	Moderately aggressive conditions for asbestos cement piping	>12
Ryznar Index (RI) =	7.57	Tendency to dissolve CaCO3 (for steel piping)	6.5-7.0
Langelier Index, Calcite =	0.05	Tendency for deposition of CaCO3 (for steel and cast iron piping)	>0
CCPP =	1.23	mg/L as $CaCO_3$, Calcium Carbonate Precipitation Potential	4-10 mg/L
$B_{H2O} + B_{CO3} + B_{PO4}$ =	0.275	mM/pH, Buffer intensity from water, carbonate, and PO_4 species	
Alk/(Cl^- + SO_4^{2-}) =	0.4	Larson's Ratio for steel and cast iron piping	> 5.0

Copper II at Field Temp. =	0.644	mg/L as copper II at dissolution; Cupric Hydroxide, light blue/blue-green
Lead II at Field Temp. =	0.2001	mg/L as lead II at dissolution; Lead Carbonate (cerussite)
Zinc II at 25C =	0.81	mg/L of Zinc II at dissolution; Hydrozincite - Basic Zinc Carbonate
pH_{25} =	7.64	pH of water if measured at 25°C

Step 5: Final Results (At Equilibrium): Theoretical finished water characteristics & metals if $CaCO_3$ precipitation has occurred. (i.e., LI and CCPP=0 and AI =12)

Final Alkalinity =	126.2	mg/L as $CaCO_3$		
Final pH =	7.61	at water temp =	21.5	°C
Final Calcium (total) =	57.5	mg/L as Ca^{2+}	143.6	mg/L as $CaCO_3$
Final Acidity =	138.5	mg/L as $CaCO_3$		
Carbon Dioxide (CO_2) =	5.70	mg/L as $CO_{2(aq)}$	1.56	mg/L as C
Final DIC =	264.7	mg/L as $CaCO_3$	31.8	mg/L as C, dissolved inorganic carbon

Copper II at Field Temp. =	0.708	mg/L as copper II at dissolution; Cupric Hydroxide, light blue/blue-green
Lead II at Field Temp. =	0.2007	mg/L as lead II at dissolution; Lead Carbonate (cerussite)
Zinc II at 25C =	0.96	mg/L of Zinc II at dissolution; Hydrozincite - Basic Zinc Carbonate
pH_{25} =	7.59	pH of water if measured at 25°C

Copyright © 96-10 Schott Software, all rights reserved.

Published by ChemSV(707)864-0845;p/n7068;19V10

Scenario 3 Southern Well Blend Quality and Mass Balance

	Unit	Well 85 and a New Well	Blend	After Fe/Mn Treatment	Flow to Perris II for Blending No Decarbonation
Flow	gpm	2,049	2,049	1,967	1,967
Ammonia as N	mg/L	1.00	1.00	1.00	1.00
Ammonium Ion ($NH4^+$)	mg/L	1.29	1.29	1.29	1.29
Barium	ug/L	0.02	0.02	0.02	0.02
Bicarbonate (HCO3)	mg/L	258	258	258	258
Alkalinity as CaCO3	mg/L	211	211	211	211
Boron	mg/L	0.50	0.50	0.50	0.50
Calcium	mg/L	110	110	110	110
Carbonate (CO3)	mg/L	3.00	3.00	3.00	3.00
Chloride	mg/L	210	210	210	210
Fluoride	mg/L	0.55	0.55	0.55	0.55
Magnesium	mg/L	40	40	40	40
Nitrate as N	mg/L	2.3	2.30	2.30	2.30
Nitrate Ion ($NO3^-$)	mg/L	10.2	10.2	10.2	10.2
Nitrite as N	mg/L	0.01	0.01	0.01	0.01
Nitrite Ion ($NO2^-$)	mg/L	0.03	0.03	0.03	0.03
pH	pH units	6.98	6.98	6.98	6.98
CO2	mg/L	44	44	44	44
Potassium	mg/L	4.4	4.4	4.38	4.38
Reactive Silica	mg/L	47.4	47	47.4	47.4
Sodium	mg/L	205	205	205	205
Strontium	ug/L	0.51	0.51	0.51	0.51
Sulfate	mg/L	333	333	333	333
Temperature	deg C	21.5	21.5	21.5	21.5
Iron	ug/L	2,090	2,090	125	125
Manganese	ug/L	290	290	17.4	17
Total Dissolved Solids	mg/L	**1,080**	**1,080**	**1,080**	**1,080**

Scenario 3 Northern Well Blend Quality and Overall Mass Balance

	Unit	Well Blend	RO Permeate	After Decarb (per Water Pro)	COMBINED WATER Before Stabilization at Perris II	COMBINED WATER After Stabilization at Perris II	CA Primary MCL	CA Secondary MCL
Flow	gpm	11,781	3,125	3,125	5,092	5,092	NA	NA
Ammonia as N	mg/L	0.64		0.033	0.41	0.41	NSL	NSL
Ammonium Ion ($NH4^+$)	mg/L	0.82	0.043	0.043	0.52	0.52	NSL	NSL
Barium	mg/L	0.33	0.003	0.003	0.01	0.01	1	1
Bicarbonate (HCO3)	mg/L	206	7.43	7.43	104.2	167	NSL	NSL
Alkalinity as CaCO3	mg/L	169	6.09	6.09	85.4	137	NSL	NSL
Boron	mg/L	0.65	0.65	0.65	0.59	0.59	NSL	NSL
Calcium	mg/L	266	2.43	2.43	44.0	44.0	NSL	NSL
Carbonate (CO3)	mg/L	3.00		0	1.16	1.16	NSL	NSL
Chloride	mg/L	855	17.3	17.3	91.7	91.7	NSL	250[a]/500[b]/600[c]
Fluoride	mg/L	0.22	0.008	0.008	0.22	0.22	2	NSL
Magnesium	mg/L	64	0.59	0.59	15.8	15.8	NSL	NSL
Nitrate as N	mg/L	6.72		0.00	0.89	0.89	10	NSL
Nitrate Ion ($NO3^-$)	mg/L	29.8	4.21	4.21	6.5	6.5	45	NSL
Nitrite as N	mg/L	0.01		0	0.00	0.00	1	NSL
Nitrite Ion ($NO2^-$)	mg/L	0.03		0	0.01	0.01	NSL	NSL
pH[d]	pH units	7.12	5.72	6.71	6.93	7.73	NSL	NSL
CO2	mg/L	22.4	23.6	2.35	18.6	8.6	NSL	NSL
Potassium	mg/L	7.88	0.43	0.43	1.96	2.0	NSL	NSL
Reactive Silica	mg/L	36	0.78	0.78	18.8	18.8	NSL	NSL
Sodium	mg/L	270	11.7	11.7	86.4	86.4	NSL	NSL
Strontium[e]	ug/L	2.15	0.02	0.02	0.21	0.2	NSL	NSL
Sulfate	mg/L	121	0.62	0.62	129.0	129.0	NSL	250[a]/500[b]/600[c]
Temperature at Collection	deg C	22	21.5	21.5	21.5	21.5	NSL	NSL
Iron	ug/L	49	9.9	9.9	54.5	54.5	NSL	300
Manganese	ug/L	7.78	1.6	1.56	7.68	7.7	NSL	50
Total Dissolved Solids	mg/L	1,817	46.2	46.2	446	537	NSL	500[a]/1,000[b]/1,500[c]
LSI					-1.41	0.05		

Table Notes:

[a]Recommended

[b]Upper

[c]Short term

[d]pH has a secondary MCL in Federal Drinking Water Standards

[e]Only radioactive stronium has an MCL.

Scenario 3 – Water Pro Projections for Decarbonating RO Permeate

Water!Pro™

Corrosion Control and Treatment Process Analysis Program - Version 3.05

Step 1: Initial Water Characteristics (1 2 3 4)

Enter initial water characteristics based on laboratory analysis.

System Name:	New RO Perms # 20			Select crystalline form: Calcite / Aragonite / Vaterite
Source Point:	Well Water			
Date of Sample:	April 2, 2015			
TDS =	46	mg/L	0.00116	mol/L, Ionic Strength
Calcium (Total) =	2.4	mg/L Ca^{2+}	6.07	mg/L as $CaCO_3$
Total Alkalinity =	6.1	mg/L as $CaCO_3$		
pH =	5.72	field pH is recommended		
Water Temperature =	21.5	°C (temp. at which pH was analyzed)		
Field Water Temperature =	21.5	°C (operating temperature at facility)		
Cl^- =	17.3	mg/L	24.4	mg/L as $CaCO_3$
SO_4^{2-} =	0.6	mg/L	0.6	mg/L as $CaCO_3$
Mg^{2+} =	0.6	mg/L	2.4	mg/L as $CaCO_3$

If alkalinity is unknown, then enter target DIC and click **"Find Alk"** button.

Find Alk	Target DIC	mg/L as C	0.0	mg/L as $CaCO_3$

Select water temp. for lead and copper and select **copper** solid(s) for calculations.

(●) Field Temperature ( ) Temperature @ 25C

☑ Cupric Hydroxide ☐ Malachite ☐ Tenorite ☑ Cupric Phosphate

Step 2: Initial Results (Before Chemical Addition)

Theoretical initial water characteristics, corrosion indices & metals after temperature correction.

pH =	5.72		72.2	uS/cm (Electrical Conductivity)
Free Calcium =	2.4	mg/L Ca^{2+}	6.1	mg/L as $CaCO_3$
Acidity =	59.9	mg/L as $CaCO_3$	0.522	mg/L, Atmospheric equilibrium $CO_{2(aq)}$
Carbon Dioxide (CO_2) =	23.57	mg/L as $CO_{2(aq)}$	6.43	mg/L as C, dissolved inorganic carbon
DIC =	66.0	mg/L as $CaCO_3$	7.92	mg/L as C, dissolved inorganic carbon

Corrosion Indices			Recommended
Aggressive Index (AI) =	7.3	Extremely aggressive conditions for asbestos cement piping	>12
Ryznar Index (RI) =	14.49	Tendency to dissolve CaCO3 (for steel piping)	6.5-7.0
Langelier Index, Calcite =	-4.39	Tendency to dissolve CaCO3 (for steel and cast iron piping)	>0
CCPP =	-52.83	mg/L as CaCO3, Calcium Carbonate Precipitation Potential	4-10 mg/L
$B_{H2O} + B_{CO3}$ =	0.236	mM/pH, Buffer intensity from water and carbonate species	
Alk/(Cl^- + SO_4^{2-}) =	0.2	Larson's Ratio for steel and cast iron piping	> 5.0

Copper II at Field Temp. =	181.530	mg/L as copper II at dissolution, Cupric Hydroxide, light blue/blue-green
Lead II at Field Temp. =	6.7472	mg/L as lead II at dissolution, Lead Carbonate (cerussite)
Zinc II at 25C =	2466.08	mg/L of Zinc II at dissolution, Hydrozincite - Basic Zinc Carbonate
pH_{25} =	5.70	pH of water if measured at 25°C

Pb & Cu Guidance — **Click button for Guidance on Lead & Copper Treatment**

Step 3: Chemical Addition: Enter dose for each chemical.

pH and Corrosion Control Adjustment				
$Ca(OH)_2$ (100% hydrated Lime)		mg/L	0.00	mg/L as $CaCO_3$
CaO (100% Quicklime)		mg/L	0.00	mg/L as $CaCO_3$
CaO (85% Quicklime)		mg/L	0.00	mg/L as $CaCO_3$
$CaCO_3$ (Limestone)		mg/L	0.00	mg/L as $CaCO_3$
Soda Ash (Na_2CO_3)		mg/L	0.00	mg/L as $CaCO_3$
Potash (K_2CO_3)		mg/L	0.00	mg/L as $CaCO_3$
Caustic Soda (NaOH)		mg/L	0.00	mg/L as $CaCO_3$
Potassium Hydroxide (KOH)		mg/L	0.00	mg/L as $CaCO_3$
Sodium Bicarbonate ($NaHCO_3$)		mg/L	0.00	mg/L as $CaCO_3$
Orthophosphate as PO_4^{3-}		mg/L	0.00	mg/L as P^-
Acid Addition				
Hydrochloric Acid (HCl)		mg/L	0.00	mg/L as $CaCO_3$
Sulfuric Acid (H_2SO_4)		mg/L	0.00	mg/L as $CaCO_3$
Air Stripping or Recarbonation (pH and Corrosion Adjustment)				
[1]Carbon Dioxide (CO_2) +/-	-21.3	mg/L	-48.44	mg/L as $CaCO_3$

[1]Enter a positive value for recarbonation or negative value for air stripping.

Coagulant Addition

Primary Coagulant				Secondary Coagulant
Aluminum Sulfate*14.3H20				No Secondary Coagulant
Aluminum Sulfate*14.3H20		mg/L	0.00	mg/L as $CaCO_3$
No Secondary Coagulant		mg/L	0.00	mg/L as $CaCO_3$

Disinfectants		
Chlorine Gas (Cl_2)		mg/L as Cl_2
Sodium Hypochlorite (NaOCl)		mg/L as Cl_2
Calcium Hypochlorite ($Ca(OCl)_2$)		mg/L as Cl_2

Other				
Calcium Chloride ($CaCl_2$)		mg/L	0.00	mg/L as $CaCO_3$
Hydrofluosilicic Acid (H_2SiF_6)		mg/L	0.00	mg/L as F^-
Sodium Silicofluoride (Na_2SiF_6)		mg/L	0.00	mg/L as F^-

Copyright © 96-10 Schott Software, all rights reserved.

Published by ChemEVI(757)564-0045phfax7000,NW0

Step 4: Interim Results (After Chemical Addition)

Theoretical interim water characteristics, corrosion indices & metals (before $CaCO_3$ precipitation).

					Recommended
Total Alkalinity =	6.1	mg/L as $CaCO_3$			6.8-8.0 or 8.5-9.3
pH =	6.71	pH of water after chemical addition and before release of CO_2			
Free Calcium =	2.4	mg/L Ca^{2+}	6.1	mg/L as $CaCO_3$	
Total Calcium =	2.4	mg/L Ca^{2+}	6.1	mg/L as $CaCO_3$	
Acidity =	11.5	mg/L as $CaCO_3$			
Carbon Dioxide (CO_2) =	2.39	mg/L as $CO_{2(aq)}$	0.64	mg/L as C	
DIC =	17.6	mg/L as $CaCO_3$	2.11	mg/L C, dissolved inorganic carbon	

Corrosion Indices			Recommended
Aggressive Index (AI) =	8.3	Extremely aggressive conditions for asbestos cement piping	>12
Ryznar Index (RI) =	13.51	Tendency to dissolve CaCO3 (for steel piping)	6.5-7.0
Langelier Index, Calcite =	-3.40	Tendency to dissolve CaCO3 (for steel and cast iron piping)	>0
CCPP =	-10.14	mg/L as $CaCO_3$, Calcium Carbonate Precipitation Potential	4-10 mg/L
$B_{H2O} + B_{CO3} + B_{PO4}$ =	0.086	mM/pH, Buffer intensity from water, carbonate, and PO_4 species	
Alk/(Cl^- + SO_4^{2-}) =	0.2	Larson's Ratio for steel and cast iron piping	> 5.0

Copper II at Field Temp. =	2.177	mg/L as copper II at dissolution, Cupric Hydroxide, light blue/blue-green
Lead II at Field Temp. =	1.0172	mg/L as lead II at dissolution, Lead Carbonate (cerussite)
Zinc II at 25C =	63.77	mg/L of Zinc II at dissolution, Hydrozincite - Basic Zinc Carbonate
pH_{25} =	6.69	pH of water if measured at 25°C

Step 5: Final Results (At Equilibrium): **Theoretical finished water characteristics & metals if $CaCO_3$ precipitation has occurred. (i.e., LI and CCPP=0 and AI =12)**

Final Alkalinity =	N/A	mg/L as $CaCO_3$		
Final pH =	N/A	at water temp =	N/A	°C
Final Calcium (total) =	N/A	mg/L Ca^{2+}	N/A	mg/L as $CaCO_3$
Final Acidity =	N/A	mg/L as $CaCO_3$		
Carbon Dioxide (CO_2) =	N/A	mg/L as $CO_{2(aq)}$	N/A	mg/L as C
Final DIC =	N/A	mg/L as $CaCO_3$	N/A	mg/L as C, dissolved inorganic carbon
Copper II =	N/A	N/A		
Lead II =	N/A	N/A		
Zinc II at 25C =	N/A	N/A		
pH_{25} =	N/A	pH of water if measured at 25°C		

Scenario 3- LSI and pH Adjustment for the Finished Water

Water!Pro™

Corrosion Control and Treatment Process Analysis Program - Version 3.05

Step 1: Initial Water Characteristics (1) (2) (3) (4)

Enter initial water characteristics based on laboratory analysis.

System Name:	New RO Perris II 20	Select crystalline form: Calcite / Aragonite / Vaterite		
Source Point:	Well Water			
Date of Sample:	April 2, 2015			
TDS =	435	mg/L	0.01087	mol/L, Ionic Strength
Calcium (Total) =	49.5	mg/L Ca^{2+}	123.54	mg/L as $CaCO_3$
Total Alkalinity =	92.5	mg/L as $CaCO_3$		
pH =	6.50	field pH is recommended		
Water Temperature =	21.5	°C (temp. at which pH was analyzed)		
Field Water Temperature =	21.5	°C (operating temperature at facility)		
Cl^- =	100.0	mg/L	141.1	mg/L as $CaCO_3$
SO_4^{2-} =	117.3	mg/L	122.2	mg/L as $CaCO_3$
Mg^{2+} =	19.0	mg/L	78.1	mg/L as $CaCO_3$

If alkalinity is unknown, then enter target DIC and click **"Find Alk"** button.

Find Alk	Target DIC		mg/L as C	0.0	mg/L as $CaCO_3$

Select water temp. for lead and copper and select **copper** solid(s) for calculations.

- (●) Field Temperature
- ( ) Temperature @ 25C

- [x] Cupric Hydroxide
- [ ] Malachite
- [ ] Tenorite
- [x] Cupric Phosphate

Step 2: Initial Results (Before Chemical Addition)

Theoretical initial water characteristics, corrosion indices & metals after temperature correction.

pH =	6.50		679.3	uS/cm (Electrical Conductivity)
Free Calcium =	44.7	mg/L Ca^{2+}	111.7	mg/L as $CaCO_3$
Acidity =	216.1	mg/L as $CaCO_3$	0.522	mg/L, Atmospheric equilibrium $CO_{2(aq)}$
Carbon Dioxide (CO_2) =	54.37	mg/L as $CO_{2(aq)}$	14.84	mg/L as C, dissolved inorganic carbon
DIC =	308.6	mg/L as $CaCO_3$	37.04	mg/L as C, dissolved inorganic carbon

Corrosion Indices			Recommended
Aggressive Index (AI) =	10.5	Moderately aggressive conditions for asbestos cement piping	>12
Ryznar Index (RI) =	9.12	Tendency to dissolve CaCO3 (for steel piping)	6.5-7.0
Langelier Index, Calcite =	-1.31	Tendency to dissolve CaCO3 (for steel and cast iron piping)	>0
CCPP =	-84.83	mg/L as CaCO3, Calcium Carbonate Precipitation Potential	4-10 mg/L
$B_{H2O} + B_{CO3}$ =	1.706	mM/pH, Buffer intensity from water and carbonate species	
Alk/(Cl^- + SO_4^{2-}) =	0.4	Larson's Ratio for steel and cast iron piping	> 5.0

Copper II at Field Temp. =	12.860	mg/L as copper II at dissolution; Cupric Hydroxide, light blue/blue-green
Lead II at Field Temp. =	0.3251	mg/L as lead II at dissolution; Lead Carbonate (cerussite)
Zinc II at 25C =	41.81	mg/L of Zinc II at dissolution; Zinc Carbonate
pH_{25} =	6.48	pH of water if measured at 25°C

Pb & Cu Guidance — **Click button for Guidance on Lead & Copper Treatment**

Step 3: Chemical Addition: **Enter dose for each chemical.**

pH and Corrosion Control Adjustment				
$Ca(OH)_2$ (100% hydrated Lime)		mg/L	0.00	mg/L as $CaCO_3$
CaO (100% Quicklime)		mg/L	0.00	mg/L as $CaCO_3$
CaO (85% Quicklime)		mg/L	0.00	mg/L as $CaCO_3$
$CaCO_3$ (Limestone)		mg/L	0.00	mg/L as $CaCO_3$
Soda Ash (Na_2CO_3)		mg/L	0.00	mg/L as $CaCO_3$
Potash (K_2CO_3)		mg/L	0.00	mg/L as $CaCO_3$
Caustic Soda (NaOH)	43.7	mg/L	54.68	mg/L as $CaCO_3$
Potassium Hydroxide (KOH)		mg/L	0.00	mg/L as $CaCO_3$
Sodium Bicarbonate ($NaHCO_3$)		mg/L	0.00	mg/L as $CaCO_3$
Orthophosphate as PO_4^{3-}		mg/L	0.00	mg/L as F^-
Acid Addition				
Hydrochloric Acid (HCl)		mg/L	0.00	mg/L as $CaCO_3$
Sulfuric Acid (H_2SO_4)		mg/L	0.00	mg/L as $CaCO_3$
Air Stripping or Recarbonation (pH and Corrosion Adjustment)				
[1]Carbon Dioxide (CO_2) +/-		mg/L	0.00	mg/L as $CaCO_3$

[1]Enter a positive value for recarbonation or negative value for air stripping.

Coagulant Addition

Primary Coagulant				Secondary Coagulant
Aluminum Sulfate*14.3H20				No Secondary Coagulant
Aluminum Sulfate*14.3H20		mg/L	0.00	mg/L as $CaCO_3$
No Secondary Coagulant		mg/L	0.00	mg/L as $CaCO_3$
Disinfectants				
Chlorine Gas (Cl_2)		mg/L as Cl_2		
Sodium Hypochlorite (NaOCl)	2.0	mg/L as Cl_2		
Calcium Hypochlorite ($Ca(OCl)_2$)		mg/L as Cl_2		
Other				
Calcium Chloride ($CaCl_2$)		mg/L	0.00	mg/L as $CaCO_3$
Hydrofluosilicic Acid (H_2SiF_6)		mg/L	0.00	mg/L as F^-
Sodium Silicofluoride (Na_2SiF_6)		mg/L	0.00	mg/L as F^-

Copyright © 96-10 Schott Software, all rights reserved.

Published by ChemSV(707)864-0845 phfl069,99/10

Step 4: Interim Results (After Chemical Addition)

Theoretical interim water characteristics, corrosion indices & metals (before $CaCO_3$ precipitation).

					Recommended
Total Alkalinity =	148.0	mg/L as $CaCO_3$			
pH =	7.67	pH of water after chemical addition and before release of CO_2			6.8-8.0 or 8.5-9.3
Free Calcium =	44.2	mg/L Ca^{2+}	110.4	mg/L as $CaCO_3$	
Total Calcium =	49.5	mg/L Ca^{2+}	123.5	mg/L as $CaCO_3$	
Acidity =	160.7	mg/L as $CaCO_3$			
Carbon Dioxide (CO_2) =	5.94	mg/L as $CO_{2(aq)}$	1.62	mg/L as C	
DIC =	308.6	mg/L as $CaCO_3$	37.04	mg/L C, dissolved inorganic carbon	

Corrosion Indices			Recommended
Aggressive Index (AI) =	11.9	Moderately aggressive conditions for asbestos cement piping	>12
Ryznar Index (RI) =	7.57	Tendency to dissolve CaCO3 (for steel piping)	6.5-7.0
Langelier Index, Calcite =	0.05	Tendency for deposition of CaCO3 (for steel and cast iron piping)	>0
CCPP =	1.36	mg/L as $CaCO_3$, Calcium Carbonate Precipitation Potential	4-10 mg/L
$B_{H2O} + B_{CO3} + B_{PO4}$ =	0.315	mM/pH, Buffer intensity from water, carbonate, and PO_4 species	
Alk/(Cl^- + SO_4^{2-}) =	0.6	Larson's Ratio for steel and cast iron piping	> 5.0

Copper II at Field Temp. =	0.734	mg/L as copper II at dissolution; Cupric Hydroxide, light blue/blue-green
Lead II at Field Temp. =	0.1983	mg/L as lead II at dissolution; Lead Carbonate (cerussite)
Zinc II at 25C =	0.73	mg/L of Zinc II at dissolution; Hydrozincite - Basic Zinc Carbonate
pH_{25} =	7.64	pH of water if measured at 25°C

Step 5: Final Results (At Equilibrium): **Theoretical finished water characteristics & metals if $CaCO_3$ precipitation has occurred. (i.e., LI and CCPP=0 and AI =12)**

Final Alkalinity =	146.6	mg/L as $CaCO_3$		
Final pH =	7.62	at water temp =	21.5	°C
Final Calcium (total) =	48.9	mg/L as Ca^{2+}	122.2	mg/L as $CaCO_3$
Final Acidity =	160.7	mg/L as $CaCO_3$		
Carbon Dioxide (CO_2) =	6.51	mg/L as $CO_{2(aq)}$	1.78	mg/L as C
Final DIC =	307.3	mg/L as $CaCO_3$	36.9	mg/L as C, dissolved inorganic carbon

Copper II at Field Temp. =	0.803	mg/L as copper II at dissolution; Cupric Hydroxide, light blue/blue-green
Lead II at Field Temp. =	0.1987	mg/L as lead II at dissolution; Lead Carbonate (cerussite)
Zinc II at 25C =	0.86	mg/L of Zinc II at dissolution; Hydrozincite - Basic Zinc Carbonate
pH_{25} =	7.60	pH of water if measured at 25°C

Scenario 4 Southern Well Blend Quality and Mass Balance

	Unit	Well 85	Blend	After Fe/Mn Treatment	Flow From Northern Wells	Blend
Flow	gpm	1,400	1,400	1,344	420	1,764
Ammonia as N	mg/L	1.00	1.00	1.00	0.64	0.91
Ammonium Ion ($NH4^+$)	mg/L	1.29	1.29	1.29	0.82	1.17
Barium	ug/L	0.02	0.02	0.02	0.33	0.09
Bicarbonate (HCO3)	mg/L	258	258	258	206	246
Alkalinity as CaCO3	mg/L	211	211	211	169	201
Boron	mg/L	0.50	0.50	0.50	0.65	0.54
Calcium	mg/L	110	110	110	266	147
Carbonate (CO3)	mg/L	3.0	3.0	3.0	3.0	3.0
Chloride	mg/L	210	210	210	855	364
Fluoride	mg/L	0.55	0.55	0.55	0.22	0.47
Magnesium	mg/L	40.0	40.0	40	64.1	45.7
Nitrate as N	mg/L	2.3	2.30	2.30	6.72	3.35
Nitrate Ion ($NO3^-$)	mg/L	10.2	10.2	10.2	29.8	14.9
Nitrite as N	mg/L	0.01	0.01	0.01	0.01	0.01
Nitrite Ion ($NO2^-$)	mg/L	0.03	0.03	0.03	0.03	0.03
pH	pH units	6.98	6.47	6.47	7.12	6.62
CO2	mg/L		128	128	22.4	85
Potassium	mg/L	4.4	4.4	4.38	7.88	5.21
Reactive Silica	mg/L	47	47	47.4	36.4	44.8
Sodium	mg/L	205	205	205	270.37	221
Strontium	ug/L	0.51	0.51	0.51	2.15	0.90
Sulfate	mg/L	333	333	333	121.02	283
Temperature	deg C	21.9	21.9	21.9	21.5	21.8
Iron	ug/L	2,090	2,090	125	49	107
Manganese	ug/L	290	290	17.4	7.78	15.1
Total Dissolved Solids	mg/L	1,080	1,080	1,080	1,817	1,256

Scenario 4 Northern Well Blend Quality and Overall Mass Balance

	Unit	Well Blend	Flow to Perris II	RO Permeate	After Decarb (per Water Pro)	COMBINED WATER Before Stabilization at Perris II	COMBINED WATER After Stabilization at Perris II	CA Primary MCL	CA Secondary MCL
Flow	gpm	11,781	4,340	3,125	3,125	4,889	4,889	NA	NA
Ammonia as N	mg/L	0.64	0.64		0.033	0.35	0.35	NSL	NSL
Ammonium Ion ($NH4^+$)	mg/L	0.82	0.82	0.043	0.043	0.45	0.45	NSL	NSL
Barium	mg/L	0.33	0.33	0.003	0.003	0.03	0.03	1	1
Bicarbonate (HCO3)	mg/L	206	206	7.43	7.43	93.4	131	NSL	NSL
Alkalinity as CaCO3	mg/L	169	169	6.09	6.09	76.5	107	NSL	NSL
Boron	mg/L	0.65	0.65	0.65	0.65	0.61	0.61	NSL	NSL
Calcium	mg/L	266	266	2.43	2.43	54.6	55.7	NSL	NSL
Carbonate (CO3)	mg/L	3.00	3.00		0	1.08	1.08	NSL	NSL
Chloride	mg/L	855	855	17.3	17.3	142	142	NSL	250[a]/500[b]/600[c]
Fluoride	mg/L	0.22	0.22	0.008	0.008	0.17	0.17	2	NSL
Magnesium	mg/L	64	64	0.59	0.59	16.9	16.9	NSL	NSL
Nitrate as N	mg/L	6.72	6.72		0.00	1.21	1.21	10	NSL
Nitrate Ion ($NO3^-$)	mg/L	29.8	29.8	4.21	4.21	8.0	8.0	45	NSL
Nitrite as N	mg/L	0.01	0.01		0	0.00	0.00	1	NSL
Nitrite Ion ($NO2^-$)	mg/L	0.03	0.03		0	0.01	0.01	NSL	NSL
pH[d]	pH units	7.12	7.12	5.72	6.71	6.65	7.76	NSL	NSL
CO2	mg/L	22.4	22.4	23.6	2.35	32.2	3.8	NSL	NSL
Potassium	mg/L	7.88	7.88	0.43	0.43	2.16	2.2	NSL	NSL
Reactive Silica	mg/L	36	36	0.78	0.78	16.7	16.7	NSL	NSL
Sodium	mg/L	270	270	11.7	11.7	87.1	87.1	NSL	NSL
Strontium[e]	ug/L	2.15	2.15	0.02	0.02	0.34	0.3	NSL	NSL
Sulfate	mg/L	121	121	0.62	0.62	102.3	102.3	NSL	250[a]/500[b]/600[c]
Temperature at Collection	deg C	21.5	21.5	21.5	21.5	21.5	21.5	NSL	NSL
Iron	ug/L	49	49	9.9	9.9	45.0	45.0	NSL	300
Manganese	ug/L	7.78	7.78	1.6	1.56	6.45	6.4	NSL	50
Total Dissolved Solids	mg/L	1,817	1,817	46.2	46.2	483	538	NSL	500[a]/1,000[b]/1,500[c]
LSI						-1.2	0.05		

Table Notes:

[a]Recommended

[b]Upper

[c]Short term

[d]pH has a secondary MCL in Federal Drinking Water Standards

[e]Only radioactive stronium has an MCL.

Scenario 4 – Water Pro Projections for Decarbonating RO Permeate

Water!Pro™

Corrosion Control and Treatment Process Analysis Program - Version 3.05

Step 1: Initial Water Characteristics (1 2 3 4)

Enter initial water characteristics based on laboratory analysis.

System Name:	New RO Perms # 20	Select crystalline form: Calcite / Aragonite / Vaterite		
Source Point:	Well Water			
Date of Sample:	April 2, 2015			
TDS =	46	mg/L	0.00116	mol/L, Ionic Strength
Calcium (Total) =	2.4	mg/L Ca^{2+}	6.07	mg/L as $CaCO_3$
Total Alkalinity =	6.1	mg/L as $CaCO_3$		
pH =	5.72	field pH is recommended		
Water Temperature =	21.5	°C (temp. at which pH was analyzed)		
Field Water Temperature =	21.5	°C (operating temperature at facility)		
Cl^- =	17.3	mg/L	24.4	mg/L as $CaCO_3$
SO_4^{2-} =	0.6	mg/L	0.6	mg/L as $CaCO_3$
Mg^{2+} =	0.6	mg/L	2.4	mg/L as $CaCO_3$

If alkalinity is unknown, then enter target DIC and click **"Find Alk"** button.

Find Alk	Target DIC	mg/L as C	0.0	mg/L as $CaCO_3$

Select water temp. for lead and copper and select **copper** solid(s) for calculations.

(●) Field Temperature
( ) Temperature @ 25C

☑ Cupric Hydroxide
☐ Malachite
☐ Tenorite
☑ Cupric Phosphate

Step 2: Initial Results (Before Chemical Addition)

Theoretical initial water characteristics, corrosion indices & metals after temperature correction.

pH =	5.72		72.2	uS/cm (Electrical Conductivity)
Free Calcium =	2.4	mg/L Ca^{2+}	6.1	mg/L as $CaCO_3$
Acidity =	59.9	mg/L as $CaCO_3$	0.522	mg/L, Atmospheric equilibrium $CO_{2(aq)}$
Carbon Dioxide (CO_2) =	23.57	mg/L as $CO_{2(aq)}$	6.43	mg/L as C, dissolved inorganic carbon
DIC =	66.0	mg/L as $CaCO_3$	7.92	mg/L as C, dissolved inorganic carbon

Corrosion Indices			Recommended
Aggressive Index (AI) =	7.3	Extremely aggressive conditions for asbestos cement piping	>12
Ryznar Index (RI) =	14.49	Tendency to dissolve CaCO3 (for steel piping)	6.5-7.0
Langelier Index, Calcite =	-4.39	Tendency to dissolve CaCO3 (for steel and cast iron piping)	>0
CCPP =	-52.83	mg/L as CaCO3, Calcium Carbonate Precipitation Potential	4-10 mg/L
$B_{H2O} + B_{CO3}$ =	0.236	mM/pH, Buffer intensity from water and carbonate species	
Alk/(Cl^- + SO_4^{2-}) =	0.2	Larson's Ratio for steel and cast iron piping	> 5.0

Copper II at Field Temp. =	181.530	mg/L as copper II at dissolution; Cupric Hydroxide, light blue/blue-green
Lead II at Field Temp. =	6.7472	mg/L as lead II at dissolution; Lead Carbonate (cerussite)
Zinc II at 25C =	2466.08	mg/L of Zinc II at dissolution; Hydrozincite - Basic Zinc Carbonate
pH_{25} =	5.70	pH of water if measured at 25°C

Pb & Cu Guidance — **Click button for Guidance on Lead & Copper Treatment**

Step 3: Chemical Addition: Enter dose for each chemical.

pH and Corrosion Control Adjustment				
$Ca(OH)_2$ (100% hydrated Lime)		mg/L	0.00	mg/L as $CaCO_3$
CaO (100% Quicklime)		mg/L	0.00	mg/L as $CaCO_3$
CaO (85% Quicklime)		mg/L	0.00	mg/L as $CaCO_3$
$CaCO_3$ (Limestone)		mg/L	0.00	mg/L as $CaCO_3$
Soda Ash (Na_2CO_3)		mg/L	0.00	mg/L as $CaCO_3$
Potash (K_2CO_3)		mg/L	0.00	mg/L as $CaCO_3$
Caustic Soda (NaOH)		mg/L	0.00	mg/L as $CaCO_3$
Potassium Hydroxide (KOH)		mg/L	0.00	mg/L as $CaCO_3$
Sodium Bicarbonate ($NaHCO_3$)		mg/L	0.00	mg/L as $CaCO_3$
Orthophosphate as PO_4^{3-}		mg/L	0.00	mg/L as P^-
Acid Addition				
Hydrochloric Acid (HCl)		mg/L	0.00	mg/L as $CaCO_3$
Sulfuric Acid (H_2SO_4)		mg/L	0.00	mg/L as $CaCO_3$
Air Stripping or Recarbonation (pH and Corrosion Adjustment)				
[1]Carbon Dioxide (CO_2) +/-	-21.3	mg/L	-48.44	mg/L as $CaCO_3$

[1]Enter a positive value for recarbonation or negative value for air stripping.

Coagulant Addition

Primary Coagulant				Secondary Coagulant
Aluminum Sulfate*14.3H20				No Secondary Coagulant
Aluminum Sulfate*14.3H20		mg/L	0.00	mg/L as $CaCO_3$
No Secondary Coagulant		mg/L	0.00	mg/L as $CaCO_3$

Disinfectants		
Chlorine Gas (Cl_2)		mg/L as Cl_2
Sodium Hypochlorite (NaOCl)		mg/L as Cl_2
Calcium Hypochlorite ($Ca(OCl)_2$)		mg/L as Cl_2

Other				
Calcium Chloride ($CaCl_2$)		mg/L	0.00	mg/L as $CaCO_3$
Hydrofluosilicic Acid (H_2SiF_6)		mg/L	0.00	mg/L as F^-
Sodium Silicofluoride (Na_2SiF_6)		mg/L	0.00	mg/L as F^-

Copyright © 96-10 Schott Software, all rights reserved.

Published by ChemEVI(757)564-0045phfax7000,WWW

Step 4: Interim Results (After Chemical Addition)

Theoretical interim water characteristics, corrosion indices & metals (before $CaCO_3$ precipitation).

					Recommended
Total Alkalinity =	6.1	mg/L as $CaCO_3$			6.8-8.0 or 8.5-9.3
pH =	6.71	pH of water after chemical addition and before release of CO_2			
Free Calcium =	2.4	mg/L Ca^{2+}	6.1	mg/L as $CaCO_3$	
Total Calcium =	2.4	mg/L Ca^{2+}	6.1	mg/L as $CaCO_3$	
Acidity =	11.5	mg/L as $CaCO_3$			
Carbon Dioxide (CO_2) =	2.36	mg/L as $CO_{2(aq)}$	0.64	mg/L as C	
DIC =	17.6	mg/L as $CaCO_3$	2.11	mg/L C, dissolved inorganic carbon	

Corrosion Indices			Recommended
Aggressive Index (AI) =	8.3	Extremely aggressive conditions for asbestos cement piping	>12
Ryznar Index (RI) =	13.51	Tendency to dissolve CaCO3 (for steel piping)	6.5-7.0
Langelier Index, Calcite =	-3.40	Tendency to dissolve CaCO3 (for steel and cast iron piping)	>0
CCPP =	-10.14	mg/L as $CaCO_3$, Calcium Carbonate Precipitation Potential	4-10 mg/L
$B_{H2O} + B_{CO3} + B_{PO4}$ =	0.086	mM/pH, Buffer intensity from water, carbonate, and PO_4 species	
Alk/(Cl^- + SO_4^{2-}) =	0.2	Larson's Ratio for steel and cast iron piping	> 5.0

Copper II at Field Temp. =	2.177	mg/L as copper II at dissolution; Cupric Hydroxide, light blue/blue-green
Lead II at Field Temp. =	1.0172	mg/L as lead II at dissolution; Lead Carbonate (cerussite)
Zinc II at 25C =	63.77	mg/L of Zinc II at dissolution; Hydrozincite - Basic Zinc Carbonate
pH_{25} =	6.69	pH of water if measured at 25°C

Step 5: Final Results (At Equilibrium): **Theoretical finished water characteristics & metals if $CaCO_3$ precipitation has occurred. (i.e., LI and CCPP=0 and AI =12)**

Final Alkalinity =	N/A	mg/L as $CaCO_3$		
Final pH =	N/A	at water temp =	N/A	°C
Final Calcium (total) =	N/A	mg/L Ca^{2+}	N/A	mg/L as $CaCO_3$
Final Acidity =	N/A	mg/L as $CaCO_3$		
Carbon Dioxide (CO_2) =	N/A	mg/L as $CO_{2(aq)}$	N/A	mg/L as C
Final DIC =	N/A	mg/L as $CaCO_3$	N/A	mg/L as C, dissolved inorganic carbon

Copper II =	N/A	N/A
Lead II =	N/A	N/A
Zinc II at 25C =	N/A	N/A
pH_{25} =	N/A	pH of water if measured at 25°C

Scenario 4- LSI and pH Adjustment for the Finished Water

Water!Pro™

Corrosion Control and Treatment Process Analysis Program - Version 3.05

Step 1: Initial Water Characteristics (1 2 3 4)

Enter initial water characteristics based on laboratory analysis.

System Name:	New RO Permi II 20			
Source Point:	Well Water			
Date of Sample:	April 2, 2015			
TDS =	488	mg/L	0.01220	mol/L, Ionic Strength
Calcium (Total) =	55.7	mg/L Ca^{2+}	138.99	mg/L as $CaCO_3$
Total Alkalinity =	76.1	mg/L as $CaCO_3$		
pH =	6.66	field pH is recommended		
Water Temperature =	21.0	°C (temp. at which pH was analyzed)		
Field Water Temperature =	21.0	°C (operating temperature at facility)		
Cl^- =	147.1	mg/L	207.6	mg/L as $CaCO_3$
SO_4^{2-} =	100.7	mg/L	104.9	mg/L as $CaCO_3$
Mg^{2+} =	17.0	mg/L	69.9	mg/L as $CaCO_3$

Select crystalline form: Calcite, Aragonite, Vaterite

If alkalinity is unknown, then enter target DIC and click **"Find Alk"** button.

Find Alk — Target DIC: mg/L as C 0.0 mg/L as $CaCO_3$

Select water temp. for lead and copper and select **copper** solid(s) for calculations.

- (●) Field Temperature
- ( ) Temperature @ 25C

☑ Cupric Hydroxide ☐ Malachite ☐ Tenorite ☑ Cupric Phosphate

Step 2: Initial Results (Before Chemical Addition)

Theoretical initial water characteristics, corrosion indices & metals after temperature correction.

pH =	6.66		762.7	uS/cm (Electrical Conductivity)
Free Calcium =	51.2	mg/L Ca^{2+}	128.0	mg/L as $CaCO_3$
Acidity =	146.4	mg/L as $CaCO_3$	0.530	mg/L, Atmospheric equilibrium $CO_{2(aq)}$
Carbon Dioxide (CO_2) =	30.96	mg/L as $CO_{2(aq)}$	8.45	mg/L as C, dissolved inorganic carbon
DIC =	222.5	mg/L as $CaCO_3$	26.70	mg/L as C, dissolved inorganic carbon

Corrosion Indices			Recommended
Aggressive Index (AI) =	10.7	Moderately aggressive conditions for asbestos cement piping	>12
Ryznar Index (RI) =	9.05	Tendency to dissolve CaCO3 (for steel piping)	6.5-7.0
Langelier Index, Calcite =	-1.20	Tendency to dissolve CaCO3 (for steel and cast iron piping)	>0
CCPP =	-52.66	mg/L as CaCO3, Calcium Carbonate Precipitation Potential	4-10 mg/L
$B_{H2O} + B_{CO3}$ =	1.108	mM/pH, Buffer intensity from water and carbonate species	
Alk/(Cl^- + SO_4^{2-}) =	0.2	Larson's Ratio for steel and cast iron piping	> 5.0

Copper II at Field Temp. =	6.995	mg/L as copper II at dissolution; Cupric Hydroxide, light blue/blue-green
Lead II at Field Temp. =	0.3054	mg/L as lead II at dissolution; Lead Carbonate (cerussite)
Zinc II at 25C =	36.34	mg/L of Zinc II at dissolution; Zinc Carbonate
pH_{25} =	6.64	pH of water if measured at 25°C

Pb & Cu Guidance — Click button for Guidance on Lead & Copper Treatment

Step 3: Chemical Addition: Enter dose for each chemical.

pH and Corrosion Control Adjustment				
$Ca(OH)_2$ (100% hydrated Lime)		mg/L	0.00	mg/L as $CaCO_3$
CaO (100% Quicklime)		mg/L	0.00	mg/L as $CaCO_3$
CaO (85% Quicklime)		mg/L	0.00	mg/L as $CaCO_3$
$CaCO_3$ (Limestone)		mg/L	0.00	mg/L as $CaCO_3$
Soda Ash (Na_2CO_3)		mg/L	0.00	mg/L as $CaCO_3$
Potash (K_2CO_3)		mg/L	0.00	mg/L as $CaCO_3$
Caustic Soda (NaOH)	24.7	mg/L	30.90	mg/L as $CaCO_3$
Potassium Hydroxide (KOH)		mg/L	0.00	mg/L as $CaCO_3$
Sodium Bicarbonate ($NaHCO_3$)		mg/L	0.00	mg/L as $CaCO_3$
Orthophosphate as PO_4^{3-}		mg/L	0.00	mg/L as P^-
Acid Addition				
Hydrochloric Acid (HCl)		mg/L	0.00	mg/L as $CaCO_3$
Sulfuric Acid (H_2SO_4)		mg/L	0.00	mg/L as $CaCO_3$
Air Stripping or Recarbonation (pH and Corrosion Adjustment)				
[1]Carbon Dioxide (CO_2) +/-		mg/L	0.00	mg/L as $CaCO_3$

[1]Enter a positive value for recarbonation or negative value for air stripping.

Coagulant Addition

Primary Coagulant				Secondary Coagulant
Aluminum Sulfate*14.3H20				No Secondary Coagulant
Aluminum Sulfate*14.3H20		mg/L	0.00	mg/L as $CaCO_3$
No Secondary Coagulant		mg/L	0.00	mg/L as $CaCO_3$

Disinfectants			
Chlorine Gas (Cl_2)		mg/L as Cl_2	
Sodium Hypochlorite (NaOCl)	2.0	mg/L as Cl_2	
Calcium Hypochlorite ($Ca(OCl)_2$)		mg/L as Cl_2	
Other			
Calcium Chloride ($CaCl_2$)		mg/L	0.00	mg/L as $CaCO_3$
Hydrofluosilicic Acid (H_2SiF_6)		mg/L	0.00	mg/L as F^-
Sodium Silicofluoride (Na_2SiF_6)		mg/L	0.00	mg/L as F^-

Copyright © 96-10 Schort Software, all rights reserved.

Published by Chem32V(707)(04-0045.pch1060,3/9/10

Step 4: Interim Results (After Chemical Addition)

Theoretical interim water characteristics, corrosion indices & metals (before $CaCO_3$ precipitation).

					Recommended
Total Alkalinity =	107.7	mg/L as $CaCO_3$			
pH =	7.76	pH of water after chemical addition and before release of CO_2			6.8-8.0 or 8.5-9.3
Free Calcium =	50.8	mg/L Ca^{2+}	126.9	mg/L as $CaCO_3$	
Total Calcium =	55.7	mg/L Ca^{2+}	139.0	mg/L as $CaCO_3$	
Acidity =	114.8	mg/L as $CaCO_3$			
Carbon Dioxide (CO_2) =	3.46	mg/L as $CO_{2(aq)}$	0.94	mg/L as C	
DIC =	222.5	mg/L as $CaCO_3$	26.70	mg/L C, dissolved inorganic carbon	

Corrosion Indices			Recommended
Aggressive Index (AI) =	11.9	Moderately aggressive conditions for asbestos cement piping	>12
Ryznar Index (RI) =	7.67	Tendency to dissolve CaCO3 (for steel piping)	6.5-7.0
Langelier Index, Calcite =	0.05	Tendency for deposition of CaCO3 (for steel and cast iron piping)	>0
CCPP =	0.92	mg/L as $CaCO_3$, Calcium Carbonate Precipitation Potential	4-10 mg/L
$B_{H2O} + B_{CO3} + B_{PO4}$ =	0.192	mM/pH, Buffer intensity from water, carbonate, and PO_4 species	
Alk/(Cl^- + SO_4^{2-}) =	0.3	Larson's Ratio for steel and cast iron piping	> 5.0

Copper II at Field Temp. =	0.441	mg/L as copper II at dissolution; Cupric Hydroxide, light blue/blue-green
Lead II at Field Temp. =	0.1991	mg/L as lead II at dissolution; Lead Carbonate (cerussite)
Zinc II at 25C =	0.61	mg/L of Zinc II at dissolution; Hydrozincite - Basic Zinc Carbonate
pH_{25} =	7.74	pH of water if measured at 25°C

Step 5: Final Results (At Equilibrium): Theoretical finished water characteristics & metals if $CaCO_3$ precipitation has occurred. (i.e., LI and CCPP=0 and AI =12)

Final Alkalinity =	106.8	mg/L as $CaCO_3$		
Final pH =	7.72	at water temp =	21	°C
Final Calcium (total) =	55.3	mg/L as Ca^{2+}	138.1	mg/L as $CaCO_3$
Final Acidity =	114.8	mg/L as $CaCO_3$		
Carbon Dioxide (CO_2) =	3.82	mg/L as $CO_{2(aq)}$	1.04	mg/L as C
Final DIC =	221.6	mg/L as $CaCO_3$	26.6	mg/L as C, dissolved inorganic carbon

Copper II at Field Temp. =	0.489	mg/L as copper II at dissolution; Cupric Hydroxide, light blue/blue-green
Lead II at Field Temp. =	0.1997	mg/L as lead II at dissolution; Lead Carbonate (cerussite)
Zinc II at 25C =	0.72	mg/L of Zinc II at dissolution; Hydrozincite - Basic Zinc Carbonate
pH_{25} =	7.69	pH of water if measured at 25°C

Scenario 5 Southern Well Blend Quality and Mass Balance

	Unit	Well 85 and a New Well	Blend	After Fe/Mn Treatment	Flow to Perris II for Blending No Decarbonation
Flow	gpm	1,997	1,997	1,917	1,917
Ammonia as N	mg/L	1.00	1.00	1.00	1.00
Ammonium Ion ($NH4^+$)	mg/L	1.29	1.29	1.29	1.29
Barium	ug/L	0.02	0.02	0.02	0.02
Bicarbonate (HCO3)	mg/L	258	258	258	258
Alkalinity as CaCO3	mg/L	211	211	211	211
Boron	mg/L	0.50	0.50	0.50	0.50
Calcium	mg/L	110	110	110	110
Carbonate (CO3)	mg/L	3.0	3.0	3.0	3.0
Chloride	mg/L	210	210	210	210
Fluoride	mg/L	0.55	0.55	0.55	0.55
Magnesium	mg/L	40	40	40	40
Nitrate as N	mg/L	2.3	2.30	2.3	2.3
Nitrate Ion ($NO3^-$)	mg/L	10.2	10.2	10.2	10.2
Nitrite as N	mg/L	0.01	0.01	0.01	0.01
Nitrite Ion ($NO2^-$)	mg/L	0.03	0.03	0.03	0.03
pH	pH units	6.98	6.47	6.47	6.47
CO2	mg/L	128	128	128	128
Potassium	mg/L	4.4	4.4	4.38	4.38
Reactive Silica	mg/L	47.4	47	47.4	47
Sodium	mg/L	205	205	205	205
Strontium	ug/L	0.51	0.51	0.51	0.51
Sulfate	mg/L	333	333	333	333
Temperature	deg C	21.9	21.9	21.9	22
Iron	ug/L	2,090	2,090	125.4	125
Manganese	ug/L	290	290	17.4	17.4
Total Dissolved Solids	mg/L	**1,080**	**1,080**	**1,080**	**1,080**

Scenario 5- Northern Well Blend Quality and Overall Mass Balance

	Unit	Well Blend	Flow to the Perris and Menifee	RO Permeate	After Decarb (per Water Pro)	COMBINED WATER Before Stabilization at Perris II	COMBINED WATER After Stabilization at Perris II	CA Primary MCL	CA Secondary MCL
Flow	gpm	11,781	0	3,125	3,125	5,042	5,042	NA	NA
Ammonia as N	mg/L	0.64	0.64		0.042	0.41	0.41	NSL	NSL
Ammonium Ion ($NH4^+$)	mg/L	0.82	0.82	0.054	0.054	0.52	0.52	NSL	NSL
Barium	mg/L	0.33	0.33	0.004	0.004	0.01	0.01	1	1
Bicarbonate (HCO3)	mg/L	206	206	8.93	8.93	103.6	161	NSL	NSL
Alkalinity as CaCO3	mg/L	169	169	7.32	7.32	84.9	137	NSL	NSL
Boron	mg/L	0.65	0.65	0.65	0.65	0.59	0.59	NSL	NSL
Calcium	mg/L	266	266	3.1	3.1	43.7	43.7	NSL	NSL
Carbonate (CO3)	mg/L	3.0	3.0		0	1.14	1.14	NSL	NSL
Chloride	mg/L	855	855	22.0	22.0	93.5	93.5	NSL	250[a]/500[b]/600[c]
Fluoride	mg/L	0.22	0.22	0.01	0.01	0.22	0.22	2	NSL
Magnesium	mg/L	64	64	0.74	0.74	15.7	15.7	NSL	NSL
Nitrate as N	mg/L	6.72	6.72		0.00	0.87	0.87	10	NSL
Nitrate Ion ($NO3^-$)	mg/L	29.78	29.8	5.2	5.2	7.1	7.1	45	NSL
Nitrite as N	mg/L	0.01	0.01		0	0.00	0.00	1	NSL
Nitrite Ion ($NO2^-$)	mg/L	0.03	0.03		0	0.01	0.01	NSL	NSL
pH[d]	pH units	7.12	7.12	5.62	6.61	6.49	7.72	NSL	NSL
CO2	mg/L	22.4	22.4	35.6	3.56	50.7	4.9	NSL	NSL
Potassium	mg/L	7.88	7.88	0.53	0.53	1.99	2.0	NSL	NSL
Reactive Silica	mg/L	36	36	0.95	0.95	18.6	18.6	NSL	NSL
Sodium	mg/L	270	270	14.7	14.7	87.0	87.0	NSL	NSL
Strontium[e]	ug/L	2.15	2.15	0.03	0.03	0.21	0.2	NSL	NSL
Sulfate	mg/L	121	121	0.84	0.84	127	127	NSL	250[a]/500[b]/600[c]
Temperature at Collection	deg C	21.5	21.5	21.5	21.5	21.5	21.5	NSL	NSL
Iron	ug/L	49	49	9.9	9.9	53.8	53.8	NSL	300
Manganese	ug/L	7.78	7.8	1.6	1.56	7.58	7.6	NSL	50
Total Dissolved Solids	mg/L	1,817	1,817	58	58	447	538	NSL	500[a]/1,000[b]/1,500[c]
LSI						-1.42	0.05		

Table Notes:

[a]Recommended

[b]Upper

[c]Short term

[d]pH has a secondary MCL in Federal Drinking Water Standards

[e]Only radioactive stronium has an MCL.

Scenario 5 – Water Pro Projections for Decarbonating RO Permeate

Water!Pro™

Corrosion Control and Treatment Process Analysis Program - Version 3.05

Step 1: Initial Water Characteristics (1 2 3 4)

Enter initial water characteristics based on laboratory analysis.

System Name:	New RO Perm.ll 20		Select crystalline form:		
Source Point:	Well Water		Calcite		
			Aragonite		
Date of Sample:	April 2, 2015		Vaterite		
TDS =	58	mg/L	0.00145	mol/L, Ionic Strength	
Calcium (Total) =	3.1	mg/L Ca^{2+}	7.74	mg/L as $CaCO_3$	
Total Alkalinity =	7.3	mg/L as $CaCO_3$			
pH =	5.62	field pH is recommended			
Water Temperature =	21.0	°C (temp. at which pH was analyzed)			
Field Water Temperature =	21.0	°C (operating temperature at facility)			
Cl^- =	22.0	mg/L	31.1	mg/L as $CaCO_3$	
SO_4^{2-} =	0.8	mg/L	0.9	mg/L as $CaCO_3$	
Mg^{2+} =	0.7	mg/L	3.0	mg/L as $CaCO_3$	

If alkalinity is unknown, then enter target DIC and click **"Find Alk"** button

Find Alk	Target DIC	mg/L as C	0.0	mg/L as $CaCO_3$

Select water temp. for lead and copper and select **copper** solid(s) for calculations.

- (●) Field Temperature
- ( ) Temperature @ 25C

- [x] Cupric Hydroxide
- [ ] Malachite
- [ ] Tenorite
- [x] Cupric Phosphate

Step 2: Initial Results (Before Chemical Addition)

Theoretical initial water characteristics, corrosion indices & metals after temperature correction.

pH =	5.62		90.6	uS/cm (Electrical Conductivity)
Free Calcium =	3.1	mg/L Ca^{2+}	7.7	mg/L as $CaCO_3$
Acidity =	88.6	mg/L as $CaCO_3$	0.530	mg/L, Atmospheric equilibrium $CO_{2(aq)}$
Carbon Dioxide (CO_2) =	35.65	mg/L as $CO_{2(aq)}$	9.73	mg/L as C, dissolved inorganic carbon
DIC =	96.9	mg/L as $CaCO_3$	11.51	mg/L as C, dissolved inorganic carbon

Corrosion Indices			Recommended
Aggressive Index (AI) =	7.4	Extremely aggressive conditions for asbestos cement piping	>12
Ryznar Index (RI) =	14.26	Tendency to dissolve CaCO3 (for steel piping)	6.5-7.0
Langelier Index, Calcite =	-4.32	Tendency to dissolve CaCO3 (for steel and cast iron piping)	>0
CCPP =	-76.62	mg/L as CaCO3, Calcium Carbonate Precipitation Potential	4-10 mg/L
$B_{HCO} + B_{CO3}$ =	0.294	mM/pH, Buffer intensity from water and carbonate species	
Alk/(Cl^- + SO_4^{2-}) =	0.2	Larson's Ratio for steel and cast iron piping	> 5.0

Copper II at Field Temp. =	305.971	mg/L as copper II at dissolution; Cupric Hydroxide, light blue/blue-green
Lead II at Field Temp. =	7.1966	mg/L as lead II at dissolution; Lead Carbonate (cerussite)
Zinc II at 25C =	2929.65	mg/L of Zinc II at dissolution; Zinc Carbonate
pH_{25} =	5.60	pH of water if measured at 25°C

Pb & Cu Guidance — Click button for Guidance on Lead & Copper Treatment

Step 3: Chemical Addition: Enter dose for each chemical.

pH and Corrosion Control Adjustment				
$Ca(OH)_2$ (100% hydrated Lime)		mg/L	0.00	mg/L as $CaCO_3$
CaO (100% Quicklime)		mg/L	0.00	mg/L as $CaCO_3$
CaO (85% Quicklime)		mg/L	0.00	mg/L as $CaCO_3$
$CaCO_3$ (Limestone)		mg/L	0.00	mg/L as $CaCO_3$
Soda Ash (Na_2CO_3)		mg/L	0.00	mg/L as $CaCO_3$
Potash (K_2CO_3)		mg/L	0.00	mg/L as $CaCO_3$
Caustic Soda (NaOH)		mg/L	0.00	mg/L as $CaCO_3$
Potassium Hydroxide (KOH)		mg/L	0.00	mg/L as $CaCO_3$
Sodium Bicarbonate ($NaHCO_3$)		mg/L	0.00	mg/L as $CaCO_3$
Orthophosphate as PO_4^{3-}		mg/L	0.00	mg/L as P
Acid Addition				
Hydrochloric Acid (HCl)		mg/L	0.00	mg/L as $CaCO_3$
Sulfuric Acid (H_2SO_4)		mg/L	0.00	mg/L as $CaCO_3$
Air Stripping or Recarbonation (pH and Corrosion Adjustment)				
[1]Carbon Dioxide (CO_2) +/-	-32.2	mg/L	-73.23	mg/L as $CaCO_3$

[1]Enter a positive value for recarbonation or negative value for air stripping

Coagulant Addition

Primary Coagulant				Secondary Coagulant
Aluminum Sulfate*14.3H20				No Secondary Coagulant
Aluminum Sulfate*14.3H20		mg/L	0.00	mg/L as $CaCO_3$
No Secondary Coagulant		mg/L	0.00	mg/L as $CaCO_3$

Disinfectants		
Chlorine Gas (Cl_2)		mg/L as Cl_2
Sodium Hypochlorite (NaOCl)		mg/L as Cl_2
Calcium Hypochlorite ($Ca(OCl)_2$)		mg/L as Cl_2

Other				
Calcium Chloride ($CaCl_2$)		mg/L	0.00	mg/L as $CaCO_3$
Hydrofluosilicic Acid (H_2SiF_6)		mg/L	0.00	mg/L as F
Sodium Silicofluoride (Na_2SiF_6)		mg/L	0.00	mg/L as F

Copyright © 96-10 Solutt Software, all rights reserved.

Published by Chem21/07/2014-09:45pM,2005,0990

Step 4: Interim Results (After Chemical Addition)

Theoretical interim water characteristics, corrosion indices & metals (before $CaCO_3$ precipitation).

Total Alkalinity =	7.3	mg/L as $CaCO_3$		
pH =	6.61	pH of water after chemical addition and before release of CO_2		
Free Calcium =	3.1	mg/L Ca^{2+}	7.7	mg/L as $CaCO_3$
Total Calcium =	3.1	mg/L Ca^{2+}	7.7	mg/L as $CaCO_3$
Acidity =	15.4	mg/L as $CaCO_3$		
Carbon Dioxide (CO_2) =	3.55	mg/L as $CO_{2(aq)}$	0.97	mg/L as C
DIC =	22.7	mg/L as $CaCO_3$	2.72	mg/L C, dissolved inorganic carbon

Corrosion Indices			Recommended
Aggressive Index (AI) =	9.4	Extremely aggressive conditions for asbestos cement piping	>12
Ryznar Index (RI) =	13.28	Tendency to dissolve CaCO3 (for steel piping)	6.5-7.0
Langelier Index, Calcite =	-3.33	Tendency to dissolve CaCO3 (for steel and cast iron piping)	>0
CCPP =	-11.79	mg/L as $CaCO_3$, Calcium Carbonate Precipitation Potential	4-10 mg/L
$B_{HCO} + B_{CO3} + B_{PO4}$ =	0.120	mM/pH, Buffer intensity from water, carbonate, and PO_4 species	
Alk/(Cl^- + SO_4^{2-}) =	0.2	Larson's Ratio for steel and cast iron piping	> 5.0

Recommended: 6.8-8.0 or 8.5-9.3

Copper II at Field Temp. =	3.607	mg/L as copper II at dissolution; Cupric Hydroxide, light blue/blue-green
Lead II at Field Temp. =	1.0359	mg/L as lead II at dissolution; Lead Carbonate (cerussite)
Zinc II at 25C =	88.38	mg/L of Zinc II at dissolution; Hydrozincite - Basic Zinc Carbonate
pH_{25} =	6.59	pH of water if measured at 25°C

Step 5: Final Results (At Equilibrium): Theoretical finished water characteristics & metals if $CaCO_3$ precipitation has occurred. (i.e., LI and CCPP=0 and AI =12)

Final Alkalinity =	N/A	mg/L as $CaCO_3$		
Final pH =	N/A	at water temp =	N/A	°C
Final Calcium (total) =	N/A	mg/L as Ca^{2+}	N/A	mg/L as $CaCO_3$
Final Acidity =	N/A	mg/L as $CaCO_3$		
Carbon Dioxide (CO_2) =	N/A	mg/L as $CO_{2(aq)}$	N/A	mg/L as C
Final DIC =	N/A	mg/L as $CaCO_3$	N/A	mg/L as C, dissolved inorganic carbon

Copper II =	N/A	N/A
Lead II =	N/A	N/A
Zinc II at 25C =	N/A	N/A
pH_{25} =	N/A	pH of water if measured at 25°C

Scenario 5- LSI and pH Adjustment for the Finished Water

Water!Pro™

Corrosion Control and Treatment Process Analysis Program - Version 3.05

Step 1: Initial Water Characteristics (1 2 3 4)

Enter initial water characteristics based on laboratory analysis.

System Name:	New RO Perms II 20		Select crystalline form:		
Source Point:	Well Water		Calcite		
			Aragonite		
Date of Sample:	April 2, 2015		Vaterite		
TDS =	447	mg/L	0.01116	mol/L, Ionic Strength	
Calcium (Total) =	43.7	mg/L Ca^{2+}	109.24	mg/L as $CaCO_3$	
Total Alkalinity =	84.7	mg/L as $CaCO_3$			
pH =	6.49	field pH is recommended			
Water Temperature =	21.0	°C (temp. at which pH was analyzed)			
Field Water Temperature =	21.0	°C (operating temperature at facility)			
Cl^- =	93.5	mg/L	132.0	mg/L as $CaCO_3$	
SO_4^{2-} =	127.1	mg/L	132.5	mg/L as $CaCO_3$	
Mg^{2+} =	15.7	mg/L	64.5	mg/L as $CaCO_3$	

If alkalinity is unknown, then enter target DIC and click **"Find Alk"** button

Find Alk	Target DIC		mg/L as C	0.0 mg/L as $CaCO_3$

Select water temp. for lead and copper and select **copper** solid(s) for calculations.

- (●) Field Temperature
- ( ) Temperature @ 25C

- [x] Cupric Hydroxide
- [ ] Malachite
- [ ] Tenorite
- [x] Cupric Phosphate

Step 2: Initial Results (Before Chemical Addition)

Theoretical initial water characteristics, corrosion indices & metals after temperature correction.

pH =	6.49		697.8	uS/cm (Electrical Conductivity)
Free Calcium =	39.3	mg/L Ca^{2+}	98.2	mg/L as $CaCO_3$
Acidity =	200.9	mg/L as $CaCO_3$	0.530	mg/L, Atmospheric equilibrium $CO_{2(aq)}$
Carbon Dioxide (CO_2) =	51.09	mg/L as $CO_{2(aq)}$	13.94	mg/L as C, dissolved inorganic carbon
DIC =	285.7	mg/L as $CaCO_3$	34.28	mg/L as C, dissolved inorganic carbon

Corrosion Indices			Recommended
Aggressive Index (AI) =	10.4	Moderately aggressive conditions for asbestos cement piping	>12
Ryznar Index (RI) =	9.34	Tendency to dissolve CaCO3 (for steel piping)	6.5-7.0
Langelier Index, Calcite =	-1.42	Tendency to dissolve CaCO3 (for steel and cast iron piping)	>0
CCPP =	-34.17	mg/L as CaCO3. Calcium Carbonate Precipitation Potential	4-10 mg/L
$B_{HCO} + B_{CO3}$ =	1.587	mM/pH, Buffer intensity from water and carbonate species	
Alk/(Cl^- + SO_4^{2-}) =	0.3	Larson's Ratio for steel and cast iron piping	> 5.0

Copper II at Field Temp. =	13.222	mg/L as copper II at dissolution: Cupric Hydroxide, light blue/blue-green
Lead II at Field Temp. =	0.3456	mg/L as lead II at dissolution: Lead Carbonate (cerussite)
Zinc II at 25C =	47.13	mg/L of Zinc II at dissolution: Zinc Carbonate
pH_{25} =	6.47	pH of water if measured at 25°C

Pb & Cu Guidance — **Click button for Guidance on Lead & Copper Treatment**

Step 3: Chemical Addition: Enter dose for each chemical.

pH and Corrosion Control Adjustment				
$Ca(OH)_2$ (100% hydrated Lime)		mg/L	0.00	mg/L as $CaCO_3$
CaO (100% Quicklime)		mg/L	0.00	mg/L as $CaCO_3$
CaO (85% Quicklime)		mg/L	0.00	mg/L as $CaCO_3$
$CaCO_3$ (Limestone)		mg/L	0.00	mg/L as $CaCO_3$
Soda Ash (Na_2CO_3)		mg/L	0.00	mg/L as $CaCO_3$
Potash (K_2CO_3)		mg/L	0.00	mg/L as $CaCO_3$
Caustic Soda (NaOH)	42.2	mg/L	52.80	mg/L as $CaCO_3$
Potassium Hydroxide (KOH)		mg/L	0.00	mg/L as $CaCO_3$
Sodium Bicarbonate ($NaHCO_3$)		mg/L	0.00	mg/L as $CaCO_3$
Orthophosphate as PO_4^{3-}		mg/L	0.00	mg/L as P^-
Acid Addition				
Hydrochloric Acid (HCl)		mg/L	0.00	mg/L as $CaCO_3$
Sulfuric Acid (H_2SO_4)		mg/L	0.00	mg/L as $CaCO_3$
Air Stripping or Recarbonation (pH and Corrosion Adjustment)				
[1]Carbon Dioxide (CO_2) +/-		mg/L	0.00	mg/L as $CaCO_3$

[1]Enter a positive value for recarbonation or negative value for air stripping.

Coagulant Addition

Primary Coagulant				Secondary Coagulant
Aluminum Sulfate*14.3H20				No Secondary Coagulant
Aluminum Sulfate*14.3H20		mg/L	0.00	mg/L as $CaCO_3$
No Secondary Coagulant		mg/L	0.00	mg/L as $CaCO_3$

Disinfectants			
Chlorine Gas (Cl_2)		mg/L as Cl_2	
Sodium Hypochlorite (NaOCl)	2.0	mg/L as Cl_2	
Calcium Hypochlorite ($Ca(OCl)_2$)		mg/L as Cl_2	
Other			
Calcium Chloride ($CaCl_2$)		mg/L	0.00 mg/L as $CaCO_3$
Hydrofluosilicic Acid (H_2SiF_6)		mg/L	0.00 mg/L as F^-
Sodium Silicofluoride (Na_2SiF_6)		mg/L	0.00 mg/L as F^-

Step 4: Interim Results (After Chemical Addition)

Theoretical interim water characteristics, corrosion indices & metals (before $CaCO_3$ precipitation).

					Recommended
Total Alkalinity =	138.3	mg/L as $CaCO_3$			
pH =	7.76	pH of water after chemical addition and before release of CO_2			6.8-8.0 or 8.5-9.3
Free Calcium =	38.8	mg/L Ca^{2+}	97.0	mg/L as $CaCO_3$	
Total Calcium =	43.7	mg/L Ca^{2+}	109.2	mg/L as $CaCO_3$	
Acidity =	147.4	mg/L as $CaCO_3$			
Carbon Dioxide (CO_2) =	4.44	mg/L as $CO_{2(aq)}$	1.21	mg/L as C	
DIC =	285.7	mg/L as $CaCO_3$	34.28	mg/L C, dissolved inorganic carbon	

Corrosion Indices			Recommended
Aggressive Index (AI) =	11.9	Moderately aggressive conditions for asbestos cement piping	>12
Ryznar Index (RI) =	7.67	Tendency to dissolve CaCO3 (for steel piping)	6.5-7.0
Langelier Index, Calcite =	0.95	Tendency for deposition of CaCO3 (for steel and cast iron piping)	>0
CCPP =	1.17	mg/L as $CaCO_3$, Calcium Carbonate Precipitation Potential	4-10 mg/L
$B_{HCO} + B_{CO3} + B_{PO4}$ =	0.246	mM/pH, Buffer intensity from water, carbonate, and PO_4 species	
Alk/(Cl^- + SO_4^{2-}) =	0.5	Larson's Ratio for steel and cast iron piping	> 5.0

Copper II at Field Temp. =	0.564	mg/L as copper II at dissolution: Cupric Hydroxide, light blue/blue-green
Lead II at Field Temp. =	0.1960	mg/L as lead II at dissolution: Lead Carbonate (cerussite)
Zinc II at 25C =	0.54	mg/L of Zinc II at dissolution: Hydrozincite - Basic Zinc Carbonate
pH_{25} =	7.74	pH of water if measured at 25°C

Step 5: Final Results (At Equilibrium): **Theoretical finished water characteristics & metals if $CaCO_3$ precipitation has occurred. (i.e., LI and CCPP=0 and AI =12)**

Final Alkalinity =	137.1	mg/L as $CaCO_3$		
Final pH =	7.72	at water temp =	21	°C
Final Calcium (total) =	43.3	mg/L as Ca^{2+}	108.1	mg/L as $CaCO_3$
Final Acidity =	147.4	mg/L as $CaCO_3$		
Carbon Dioxide (CO_2) =	4.91	mg/L as $CO_{2(aq)}$	1.34	mg/L as C
Final DIC =	284.5	mg/L as $CaCO_3$	34.1	mg/L as C, dissolved inorganic carbon

Copper II at Field Temp. =	0.623	mg/L as copper II at dissolution: Cupric Hydroxide, light blue/blue-green
Lead II at Field Temp. =	0.1963	mg/L as lead II at dissolution: Lead Carbonate (cerussite)
Zinc II at 25C =	0.64	mg/L of Zinc II at dissolution: Hydrozincite - Basic Zinc Carbonate
pH_{25} =	7.69	pH of water if measured at 25°C

Copyright © 96-00 Schott Software, all rights reserved.

Published by Chem[Ox]707[864-0845]ph7[663,9]10

Scenario 6. AuqaSel Product Quality

	Unit	AquaSel Permeate to Perris II
EDR Product	gpm	910
Ammonia as N	mg/L	0.97
Ammonium Ion ($NH4^+$)	mg/L	2.00
Barium	ug/L	0.30
Bicarbonate (HCO3)	mg/L	720
Alkalinity as CaCO3	mg/L	590
Boron	mg/L	0.65
Calcium	mg/L	65
Carbonate (CO3)	mg/L	3.00
Chloride	mg/L	700
Fluoride	mg/L	0.30
Magnesium	mg/L	22
Nitrate as N	mg/L	3.80
Nitrate Ion ($NO3^-$)	mg/L	17.0
Nitrite as N	mg/L	0.00
Nitrite Ion ($NO2^-$)	mg/L	0.00
pH	pH units	7.60
CO2	mg/L	25.2
Potassium	mg/L	6.70
Reactive Silica	mg/L	130
Sodium	mg/L	430
Strontium	ug/L	6.01
Sulfate	mg/L	22
Temperature	deg C	22
Iron	ug/L	186
Manganese	ug/L	30
Total Dissolved Solids	mg/L	**2,120**

Scenario 6- Northern Well Blend Quality and Overall Mass Balance

	Unit	Well Blend	RO Feed Blend	RO Permeate	After Decarb (per Water Pro)	COMBINED WATER Before Stabilization at Perris II	COMBINED WATER After Stabilization at Perris II	CA Primary MCL	CA Secondary MCL
Flow	gpm	11,781	4,340	3,125	3,125	4,289	4,289	NA	NA
Ammonia as N	mg/L	0.64	0.64		0.033	0.29	0.29	NSL	NSL
Ammonium Ion ($NH4^+$)	mg/L	0.82	0.82	0.043	0.043	0.57	0.57	NSL	NSL
Barium	mg/L	0.33	0.33	0.003	0.003	0.08	0.08	1	1
Bicarbonate (HCO3)	mg/L	206	206	7.43	7.43	200.8	209	NSL	NSL
Alkalinity as CaCO3	mg/L	169	169	6.09	6.09	165	171	NSL	NSL
Boron	mg/L	0.65	0.65	0.65	0.65	0.65	0.65	NSL	NSL
Calcium	mg/L	266	266	2.43	2.43	19.4	19.4	NSL	NSL
Carbonate (CO3)	mg/L	3.00	3.00		0	0.81	0.81	NSL	NSL
Chloride	mg/L	855	855	17.3	17.3	203	203	NSL	250[a]/500[b]/600[c]
Fluoride	mg/L	0.22	0.22	0.008	0.008	0.09	0.09	2	NSL
Magnesium	mg/L	64	64	0.59	0.59	6.4	6.4	NSL	NSL
Nitrate as N	mg/L	6.72	6.72		0.00	4.54	4.54	10	NSL
Nitrate Ion ($NO3^-$)	mg/L	29.78	29.78	4.21	4.21	23.2	23.2	45	NSL
Nitrite as N	mg/L	0.01	0.01		0	0.00	0.00	1	NSL
Nitrite Ion ($NO2^-$)	mg/L	0.03	0.03		0	0.01	0.01	NSL	NSL
pH[d]	pH units	7.12	7.12	5.72	6.71	7.56	8.00	NSL	NSL
CO2	mg/L	22.4	22.4	23.6	2.35	8.5	3.3	NSL	NSL
Potassium	mg/L	7.88	7.88	0.43	0.43	2.13	2.1	NSL	NSL
Reactive Silica	mg/L	36	36	0.78	0.78	35.9	35.9	NSL	NSL
Sodium	mg/L	270	270	11.7	11.7	125	125	NSL	NSL
Strontium[e]	ug/L	2.15	2.15	0.02	0.02	1.64	1.6	NSL	NSL
Sulfate	mg/L	121	121	0.62	0.62	6.4	6.4	NSL	250[a]/500[b]/600[c]
Temperature at Collection	deg C	21.5	21.5	21.5	21.5	21.5	21.5	NSL	NSL
Iron	ug/L	49	49	9.9	9.9	57.7	57.7	NSL	300
Manganese	ug/L	7.78	7.78	1.6	1.56	9.14	9.1	NSL	50
Total Dissolved Solids	mg/L	1,817	1,817	46.2	46.2	609	623	NSL	500[a]/1,000[b]/1,500[c]
LSI				-4.39	-3.4	-0.42	0.05		
Table Notes:									
[a]Recommended									
[b]Upper									
[c]Short term			2.15						
[d]pH has a secondary MCL in Federal Drinking Water Standarc			0.005						
[e]Only radioactive stronium has an MCL.			2.145						

Scenario 6 – Water Pro Projections for Decarbonating RO Permeate

Water!Pro™

Corrosion Control and Treatment Process Analysis Program - Version 3.05

Step 1: Initial Water Characteristics (1 2 3 4)

Enter initial water characteristics based on laboratory analysis.

System Name:	New RO Perms ii 20	Select crystalline form: Calcite / Aragonite / Vaterite		
Source Point:	Well Water			
Date of Sample:	April 2, 2015			
TDS =	46	mg/L	0.00116	mol/L, Ionic Strength
Calcium (Total) =	2.4	mg/L Ca^{2+}	6.07	mg/L as $CaCO_3$
Total Alkalinity =	6.1	mg/L as $CaCO_3$		
pH =	5.72	field pH is recommended		
Water Temperature =	21.5	°C (temp. at which pH was analyzed)		
Field Water Temperature =	21.5	°C (operating temperature at facility)		
Cl^- =	17.3	mg/L	24.4	mg/L as $CaCO_3$
SO_4^{2-} =	0.6	mg/L	0.6	mg/L as $CaCO_3$
Mg^{2+} =	0.6	mg/L	2.4	mg/L as $CaCO_3$

If alkalinity is unknown, then enter target DIC and click **"Find Alk"** button.

Find Alk	Target DIC	mg/L as C	0.0	mg/L as $CaCO_3$

Select water temp. for lead and copper and select **copper** solid(s) for calculations.

(●) Field Temperature
( ) Temperature @ 25C

[x] Cupric Hydroxide
[ ] Malachite
[ ] Tenorite
[x] Cupric Phosphate

Step 2: Initial Results (Before Chemical Addition)

Theoretical initial water characteristics, corrosion indices & metals after temperature correction.

pH =	5.72		72.2	uS/cm (Electrical Conductivity)
Free Calcium =	2.4	mg/L Ca^{2+}	6.1	mg/L as $CaCO_3$
Acidity =	59.9	mg/L as $CaCO_3$	0.522	mg/L, Atmospheric equilibrium $CO_{2(aq)}$
Carbon Dioxide (CO_2) =	23.67	mg/L as $CO_{2(aq)}$	6.43	mg/L as C, dissolved inorganic carbon
DIC =	66.0	mg/L as $CaCO_3$	7.92	mg/L as C, dissolved inorganic carbon

Corrosion Indices			Recommended
Aggressive Index (AI) =	7.3	Extremely aggressive conditions for asbestos cement piping	>12
Ryznar Index (RI) =	14.49	Tendency to dissolve CaCO3 (for steel piping)	6.5-7.0
Langelier Index, Calcite =	-4.39	Tendency to dissolve CaCO3 (for steel and cast iron piping)	>0
CCPP =	-52.83	mg/L as CaCO3, Calcium Carbonate Precipitation Potential	4-10 mg/L
$B_{H2O} + B_{CO3}$ =	0.236	mM/pH, Buffer intensity from water and carbonate species	
Alk/(Cl^- + SO_4^{2-}) =	0.2	Larson's Ratio for steel and cast iron piping	> 5.0
Copper II at Field Temp. =	181.530	mg/L as copper II at dissolution; Cupric Hydroxide, light blue/blue-green	
Lead II at Field Temp. =	6.7472	mg/L as lead II at dissolution; Lead Carbonate (cerussite)	
Zinc II at 25C =	2466.08	mg/L of Zinc II at dissolution; Hydrozincite - Basic Zinc Carbonate	
pH_{25} =	5.70	pH of water if measured at 25°C	

Pb & Cu Guidance — **Click button for Guidance on Lead & Copper Treatment**

Step 3: Chemical Addition: Enter dose for each chemical.

pH and Corrosion Control Adjustment				
$Ca(OH)_2$ (100% hydrated Lime)		mg/L	0.00	mg/L as $CaCO_3$
CaO (100% Quicklime)		mg/L	0.00	mg/L as $CaCO_3$
CaO (85% Quicklime)		mg/L	0.00	mg/L as $CaCO_3$
$CaCO_3$ (Limestone)		mg/L	0.00	mg/L as $CaCO_3$
Soda Ash (Na_2CO_3)		mg/L	0.00	mg/L as $CaCO_3$
Potash (K_2CO_3)		mg/L	0.00	mg/L as $CaCO_3$
Caustic Soda (NaOH)		mg/L	0.00	mg/L as $CaCO_3$
Potassium Hydroxide (KOH)		mg/L	0.00	mg/L as $CaCO_3$
Sodium Bicarbonate ($NaHCO_3$)		mg/L	0.00	mg/L as $CaCO_3$
Orthophosphate as PO_4^{3-}		mg/L	0.00	mg/L as P^-
Acid Addition				
Hydrochloric Acid (HCl)		mg/L	0.00	mg/L as $CaCO_3$
Sulfuric Acid (H_2SO_4)		mg/L	0.00	mg/L as $CaCO_3$
Air Stripping or Recarbonation (pH and Corrosion Adjustment)				
[1]Carbon Dioxide (CO_2) +/-	-21.3	mg/L	-48.44	mg/L as $CaCO_3$

[1]Enter a positive value for recarbonation or negative value for air stripping.

Coagulant Addition

Primary Coagulant				Secondary Coagulant
Aluminum Sulfate*14.3H20				No Secondary Coagulant
Aluminum Sulfate*14.3H20		mg/L	0.00	mg/L as $CaCO_3$
No Secondary Coagulant		mg/L	0.00	mg/L as $CaCO_3$
Disinfectants				
Chlorine Gas (Cl_2)		mg/L as Cl_2		
Sodium Hypochlorite (NaOCl)		mg/L as Cl_2		
Calcium Hypochlorite ($Ca(OCl)_2$)		mg/L as Cl_2		
Other				
Calcium Chloride ($CaCl_2$)		mg/L	0.00	mg/L as $CaCO_3$
Hydrofluosilicic Acid (H_2SiF_6)		mg/L	0.00	mg/L as F^-
Sodium Silicofluoride (Na_2SiF_6)		mg/L	0.00	mg/L as F^-

Copyright © 96-10 Schott Software, all rights reserved.

Published by Chem[EV]7[S]64-0845pA/1968,99/90

Step 4: Interim Results (After Chemical Addition)

Theoretical interim water characteristics, corrosion indices & metals (before $CaCO_3$ precipitation).

Total Alkalinity =	6.1	mg/L as $CaCO_3$		
pH =	6.71	pH of water after chemical addition and before release of CO_2		
Free Calcium =	2.4	mg/L Ca^{2+}	6.1	mg/L as $CaCO_3$
Total Calcium =	2.4	mg/L Ca^{2+}	6.1	mg/L as $CaCO_3$
Acidity =	11.5	mg/L as $CaCO_3$		
Carbon Dioxide (CO_2) =	2.36	mg/L as $CO_{2(aq)}$	0.64	mg/L as C
DIC =	17.6	mg/L as $CaCO_3$	2.11	mg/L C, dissolved inorganic carbon

Corrosion Indices			Recommended
			6.8-8.0 or 8.5-9.3
Aggressive Index (AI) =	8.3	Extremely aggressive conditions for asbestos cement piping	>12
Ryznar Index (RI) =	13.51	Tendency to dissolve CaCO3 (for steel piping)	6.5-7.0
Langelier Index, Calcite =	-3.40	Tendency to dissolve CaCO3 (for steel and cast iron piping)	>0
CCPP =	-10.14	mg/L as $CaCO_3$, Calcium Carbonate Precipitation Potential	4-10 mg/L
$B_{H2O} + B_{CO3} + B_{PO4}$ =	0.086	mM/pH, Buffer intensity from water, carbonate, and PO_4 species	
Alk/(Cl^- + SO_4^{2-}) =	0.2	Larson's Ratio for steel and cast iron piping	> 5.0
Copper II at Field Temp. =	2.177	mg/L as copper II at dissolution; Cupric Hydroxide, light blue/blue-green	
Lead II at Field Temp. =	1.0172	mg/L as lead II at dissolution; Lead Carbonate (cerussite)	
Zinc II at 25C =	63.77	mg/L of Zinc II at dissolution; Hydrozincite - Basic Zinc Carbonate	
pH_{25} =	6.59	pH of water if measured at 25°C	

Step 5: Final Results (At Equilibrium): Theoretical finished water characteristics & metals if $CaCO_3$ precipitation has occurred. (i.e., LI and CCPP=0 and AI =12)

Final Alkalinity =	N/A	mg/L as $CaCO_3$		
Final pH =	N/A	at water temp =	N/A	°C
Final Calcium (total) =	N/A	mg/L as Ca^{2+}	N/A	mg/L as $CaCO_3$
Final Acidity =	N/A	mg/L as $CaCO_3$		
Carbon Dioxide (CO_2) =	N/A	mg/L as $CO_{2(aq)}$	N/A	mg/L as C
Final DIC =	N/A	mg/L as $CaCO_3$	N/A	mg/L as C, dissolved inorganic carbon
Copper II =	N/A	N/A		
Lead II =	N/A	N/A		
Zinc II at 25C =	N/A	N/A		
pH_{25} =	N/A	pH of water if measured at 25°C		

Scenario 6- LSI and pH Adjustment for the Finished Water

Step 1: Initial Water Characteristics

1 2 3 4

Enter initial water characteristics based on laboratory analysis.

System Name:	New RO Perris II 20	Select crystalline form:		
Source Point:	Well Water	Calcite / Aragonite / Vaterite		
Date of Sample:	April 2, 2015			
TDS =	608	mg/L	0.01520	mol/L, Ionic Strength
Calcium (Total) =	19.4	mg/L Ca^{2+}	48.48	mg/L as $CaCO_3$
Total Alkalinity =	164.6	mg/L as $CaCO_3$		
pH =	7.55	field pH is recommended		
Water Temperature =	21.5	°C (temp. at which pH was analyzed)		
Field Water Temperature =	21.5	°C (operating temperature at facility)		
Cl^- =	202.6	mg/L	286.0	mg/L as $CaCO_3$
SO_4^{2-} =	6.4	mg/L	6.7	mg/L as $CaCO_3$
Mg^{2+} =	6.4	mg/L	26.4	mg/L as $CaCO_3$

If alkalinity is unknown, then enter target DIC and click **"Find Alk"** button.

Find Alk | Target DIC | | mg/L as C | 0.0 | mg/L as $CaCO_3$

Select water temp. for lead and copper and select **copper** solid(s) for calculations.

- (●) Field Temperature
- ( ) Temperature @ 25C

- [x] Cupric Hydroxide
- [ ] Malachite
- [ ] Tenorite
- [x] Cupric Phosphate

Step 2: Initial Results (Before Chemical Addition)

Theoretical initial water characteristics, corrosion indices & metals after temperature correction.

pH =	7.55		949.9	uS/cm (Electrical Conductivity)
Free Calcium =	18.8	mg/L Ca^{2+}	46.9	mg/L as $CaCO_3$
Acidity =	183.1	mg/L as $CaCO_3$	0.522	mg/L, Atmospheric equilibrium $CO_{2(aq)}$
Carbon Dioxide (CO_2) =	8.47	mg/L as $CO_{2(aq)}$	2.31	mg/L as C, dissolved inorganic carbon
DIC =	347.6	mg/L as $CaCO_3$	41.72	mg/L as C, dissolved inorganic carbon

Corrosion Indices			Recommended
Aggressive Index (AI) =	11.4	Moderately aggressive conditions for asbestos cement piping	>12
Ryznar Index (RI) =	8.40	Tendency to dissolve CaCO3 (for steel piping)	6.5-7.0
Langelier Index, Calcite =	-0.42	Tendency to dissolve CaCO3 (for steel and cast iron piping)	>0
CCPP =	-10.19	mg/L as CaCO3, Calcium Carbonate Precipitation Potential	4-10 mg/L
$B_{H20} + B_{CO3}$ =	0.434	mM/pH, Buffer intensity from water and carbonate species	
Alk/(Cl^- + SO_4^{2-}) =	0.6	Larson's Ratio for steel and cast iron piping	> 5.0
Copper II at Field Temp. =	1.047	mg/L as copper II at dissolution; Cupric Hydroxide, light blue/blue-green	
Lead II at Field Temp. =	0.1969	mg/L as lead II at dissolution; Lead Carbonate (cerussite)	
Zinc II at 25C =	1.14	mg/L of Zinc II at dissolution; Hydrozincite - Basic Zinc Carbonate	
pH_{25} =	7.53	pH of water if measured at 25°C	

Pb & Cu Guidance | **Click button for Guidance on Lead & Copper Treatment**

Step 3: Chemical Addition: Enter dose for each chemical.

pH and Corrosion Control Adjustment				
$Ca(OH)_2$ (100% hydrated Lime)		mg/L	0.00	mg/L as $CaCO_3$
CaO (100% Quicklime)		mg/L	0.00	mg/L as $CaCO_3$
CaO (85% Quicklime)		mg/L	0.00	mg/L as $CaCO_3$
$CaCO_3$ (Limestone)		mg/L	0.00	mg/L as $CaCO_3$
Soda Ash (Na_2CO_3)		mg/L	0.00	mg/L as $CaCO_3$
Potash (K_2CO_3)		mg/L	0.00	mg/L as $CaCO_3$
Caustic Soda (NaOH)	5.1	mg/L	6.38	mg/L as $CaCO_3$
Potassium Hydroxide (KOH)		mg/L	0.00	mg/L as $CaCO_3$
Sodium Bicarbonate ($NaHCO_3$)		mg/L	0.00	mg/L as $CaCO_3$
Orthophosphate as PO_4^{3-}		mg/L	0.00	mg/L as P^-
Acid Addition				
Hydrochloric Acid (HCl)		mg/L	0.00	mg/L as $CaCO_3$
Sulfuric Acid (H_2SO_4)		mg/L	0.00	mg/L as $CaCO_3$
Air Stripping or Recarbonation (pH and Corrosion Adjustment)				
[1]Carbon Dioxide (CO_2) +/-		mg/L	0.00	mg/L as $CaCO_3$

[1]Enter a positive value for recarbonation or negative value for air stripping.

Coagulant Addition

Primary Coagulant				Secondary Coagulant
Aluminum Sulfate*14.3H20				No Secondary Coagulant
Aluminum Sulfate*14.3H20		mg/L	0.00	mg/L as $CaCO_3$
No Secondary Coagulant		mg/L	0.00	mg/L as $CaCO_3$

Disinfectants			
Chlorine Gas (Cl_2)		mg/L as Cl_2	
Sodium Hypochlorite (NaOCl)	2.0	mg/L as Cl_2	
Calcium Hypochlorite ($Ca(OCl)_2$)		mg/L as Cl_2	
Other			
Calcium Chloride ($CaCl_2$)		mg/L	0.00	mg/L as $CaCO_3$
Hydrofluosilicic Acid (H_2SiF_6)		mg/L	0.00	mg/L as F^-
Sodium Silicofluoride (Na_2SiF_6)		mg/L	0.00	mg/L as F^-

Step 4: Interim Results (After Chemical Addition)

Theoretical interim water characteristics, corrosion indices & metals (before $CaCO_3$ precipitation).

Total Alkalinity =	171.5	mg/L as $CaCO_3$		
pH =	8.01	pH of water after chemical addition and before release of CO_2		
Free Calcium =	18.6	mg/L Ca^{2+}	46.5	mg/L as $CaCO_3$
Total Calcium =	19.4	mg/L Ca^{2+}	48.5	mg/L as $CaCO_3$
Acidity =	176.1	mg/L as $CaCO_3$		
Carbon Dioxide (CO_2) =	3.02	mg/L as $CO_{2(aq)}$	0.82	mg/L as C
DIC =	347.6	mg/L as $CaCO_3$	41.72	mg/L C, dissolved inorganic carbon

Corrosion Indices			Recommended
			6.8-8.0 or 8.5-9.3
Aggressive Index (AI) =	11.9	Moderately aggressive conditions for asbestos cement piping	>12
Ryznar Index (RI) =	7.92	Tendency to dissolve CaCO3 (for steel piping)	6.5-7.0
Langelier Index, Calcite =	0.05	Tendency for deposition of CaCO3 (for steel and cast iron piping)	>0
CCPP =	0.90	mg/L as $CaCO_3$, Calcium Carbonate Precipitation Potential	4-10 mg/L
$B_{H20} + B_{CO3} + B_{PO4}$ =	0.205	mM/pH, Buffer intensity from water, carbonate, and PO_4 species	
Alk/(Cl^- + SO_4^{2-}) =	0.6	Larson's Ratio for steel and cast iron piping	> 5.0
Copper II at Field Temp. =	0.390	mg/L as copper II at dissolution; Cupric Hydroxide, light blue/blue-green	
Lead II at Field Temp. =	0.1982	mg/L as lead II at dissolution; Lead Carbonate (cerussite)	
Zinc II at 25C =	0.21	mg/L of Zinc II at dissolution; Hydrozincite - Basic Zinc Carbonate	
pH_{25} =	7.99	pH of water if measured at 25°C	

Step 5: Final Results (At Equilibrium): Theoretical finished water characteristics & metals if $CaCO_3$ precipitation has occurred. (i.e., LI and CCPP=0 and AI =12)

Final Alkalinity =	170.6	mg/L as $CaCO_3$		
Final pH =	7.97	at water temp =	21.5	°C
Final Calcium (total) =	19.1	mg/L as Ca^{2+}	47.6	mg/L as $CaCO_3$
Final Acidity =	176.1	mg/L as $CaCO_3$		
Carbon Dioxide (CO_2) =	3.31	mg/L as $CO_{2(aq)}$	0.90	mg/L as C
Final DIC =	346.7	mg/L as $CaCO_3$	41.6	mg/L as C, dissolved inorganic carbon
Copper II at Field Temp. =	0.425	mg/L as copper II at dissolution; Cupric Hydroxide, light blue/blue-green		
Lead II at Field Temp. =	0.1976	mg/L as lead II at dissolution; Lead Carbonate (cerussite)		
Zinc II at 25C =	0.25	mg/L of Zinc II at dissolution; Hydrozincite - Basic Zinc Carbonate		
pH_{25} =	7.95	pH of water if measured at 25°C		

Copyright © 96-10 Schott Software, all rights reserved.

Published by ChemSW(707)864-0845;pfn11068;11/1/10

Appendix D
Well and Blend Water Quality Projections Used in 2008 PDR

Table D-1 Average Concentration of Constituents in 10 Wells Supplying Water to PDF II

Constituent	Unit	Well 76	Well 77	Well 81	Well 82	Well 83	Well 84	Well 86	Well 87	Well 88	Well 89	Blend
Flow	Gpm	1,600	250	750	1,000	750	750	1,300	750	1,000	500	8,650
Ammonia as N	mg/L	1.00	1.00	1.00	1.00	1.00	1.00	0.50[a]	0.50[a]	0.50[a]	1.00	0.82
Ammonium Ion (NH_4)[b]	mg/L	1.29	1.29	1.29	1.29	1.29	1.29	0.64	0.64	0.64	1.29	1.06
Barium	µg/L	120	257	363	440	123	55	180	520	1,100	175	337
Bicarbonate (HCO_3)	mg/L	310	390	245	245	203	160	119	91.0	159	200	205
Boron	mg/L	0.10	0.20	0.08	0.10	0.20	0.63	0.50	0.30	0.30	0.10	0.26
Calcium	mg/L	380	220	148	255	330	280	400	310	330	117	304
Carbonate (CO_3)	mg/L	3.00	3.00	3.00	3.00	3.00	3.00	3.00	3.00	3.00	3.00	3.00
Chloride	mg/L	748	494	301	618	1,013	1,503	1,505	1,073	1,010	233	918
Fluoride	mg/L	0.20	0.20	0.20	0.23	0.20	0.13	0.30	0.20	0.20	0.20	0.21
Magnesium	mg/L	110	55.0	41.5	64.3	56.5	59.5	110	51.0	82.0	31.0	75.2
Nitrate as N	mg/L	7.00	4.6	8.50	5.50	7.33	2.93	13.0	8.00	12.0	7.9	8.18
Nitrate Ion (NO_3)[b]	mg/L	31.0	20.4	37.6	24.4	32.4	13.0	57.6	35.4	53.1	34.9	36.2
Nitrite as N	mg/L	0.01	0.07	0.01	0.01	0.01	0.01	0.01	0.01	0.01	0.03	0.01
Nitrite Ion (NO_2)[b]	mg/L	0.03	0.23	0.03	0.03	0.03	0.03	0.03	0.03	0.03	0.10	0.04
pH	pH Units	6.80	6.90	6.90	7.05	7.48	7.50	6.90	7.10	7.20	6.70	6.98
Potassium	mg/L	6.30	9.0	8.90	9.00	9.43	9.98	7.00	11.0	11.0	4.6	8.46
Reactive Silica	mg/L	53.8	55.4	50.9	55.4	31.9	23.3	38.0	24.0	37.0	66.8	43.1
Sodium	mg/L	130	200	84.3	128	345	750	360	300	180	80	252
Strontium [a]	µg/L	1,475	2,945	588	1,700	3,000	1,900	2,450	2,233	1,800	590	1,834
Sulfate	mg/L	243	70.0	41.8	47.3	115	224	130	40.0	16.0	64.0	114
Temperature at Collection	°C	21.6	22.3	21.8	21.4	21.6	21.5	21.3	23.0	22.5	22.0	21.8
Total Dissolved Solids	mg/L	2,038	1,460	872	1,448	2,290	2,810	2,594	2,026	1,979	782	1,944

[a] Based on samples collected prior to June 1, 2006.
[b] Calculated.
°C – degrees Celsius

Table D-2 Water Quality Projections - High TDS Water - TDS Long Term 12 Wells Blend 1

Parameter	Unit	Well 76	Well 81	Well 82	Well 83	Well 84	Well 86	Well 87	Well 88	Well 75	Well 77	Well 85	Well 89	Blend
Flow	gpm	0	0	0	400	750	1,100	0	0	0	0	0	0	2,250
Ammonia as N	mg/L	1.00	1.00	1.00	1.00	1.00	0.50	0.50	0.50	2.00	1.00	1.00	1.00	0.76
Ammonium Ion ($NH4^+$)	mg/L	1.29	1.29	1.29	1.29	1.29	0.64	0.64	0.64	2.57	1.29	1.29	1.29	0.97
Barium	ug/L	120	363	440	123	55	180	520	1,100	100	257	17	175	128
Bicarbonate (HCO3)	mg/L	310	245	245	203	160	119	91.0	159	623	390	258	200	148
Boron	mg/L	0.10	0.08	0.10	0.20	0.63	0.50	0.30	0.30	0.20	0.20	0.50	0.10	0.49
Calcium	mg/L	380	148	255	330	280	400	310	330	290	220	110	117	348
Carbonate (CO3)	mg/L	3.00	3.00	3.00	3.00	3.00	3.00	3.00	3.00	3.00	3.00	3.00	3.00	3.00
Chloride	mg/L	748	301	618	1,013	1,503	1,505	1,073	1,010	510	494	210	233	1,417
Fluoride	mg/L	0.20	0.20	0.23	0.20	0.13	0.30	0.20	0.20	0.30	0.20	0.55	0.20	0.22
Magnesium	mg/L	110	41.5	64.3	56.5	59.5	110	51.0	82.0	120	55.0	40.0	31.0	83.7
Nitrate as N	mg/L	7.00	8.50	5.50	7.33	2.93	13.0	8.00	12.0	3.0	4.6	2.3	7.9	8.6
Nitrate Ion ($NO3^-$)	mg/L	31.0	37.6	24.4	32.4	13.0	57.6	35.4	53.1	13.3	20.4	10.2	34.9	38.2
Nitrite as N	mg/L	0.01	0.01	0.01	0.01	0.01	0.01	0.01	0.01	0.01	0.07	0.01	0.03	0.01
Nitrite Ion ($NO2^-$)	mg/L	0.03	0.03	0.03	0.03	0.03	0.03	0.03	0.03	0.03	0.23	0.03	0.10	0.03
pH	pH units	6.80	6.90	7.05	7.48	7.50	6.90	7.10	7.20	6.20	6.90	6.98	6.70	7.11
Potassium	mg/L	6.30	8.90	9.00	9.43	9.98	7.00	11.0	11.0	11.0	9.0	4.4	4.6	8.4
Reactive Silica	mg/L	53.8	50.9	55.4	31.9	23.3	38.0	24.0	37.0	67.0	55.4	47.4	66.8	32.0
Sodium	mg/L	130	84.3	128	345	750	360	300	180	240	200	205	80	487
Strontium	ug/L	1,475	588	1,700	3,000	1,900	2,450	2,233	1,800	1,512	2,945	505	590	2,364
Sulfate	mg/L	243	41.8	47.3	115	224	130	40.0	16.0	528	70.0	333.0	64.0	158.5
Temperature at Collection - °C	deg C	21.6	21.8	21.4	21.6	21.5	21.3	23.0	22.5	21.5	22.3	21.9	22.0	21.4
Total Dissolved Solids	mg/L	2,038	872	1,448	**2,290**	**2,810**	**2,594**	2,026	1,979	2,005	1,460	1,080	782	2,612
Calculated TDS														2,728

Table D-3 Water Quality Projections - WQ 2 - High Silica Water - Silica New Long Term 12 Wells Blend 2

Parameter	Unit	Well 76	Well 81	Well 82	Well 83	Well 84	Well 86	Well 87	Well 88	Well 75	Well 77	Well 85	Well 89	Blend
Flow	gpm	0	0	750	0	0	0	0	0	1000	0	0	500	2,250
Ammonia as N	mg/L	1.00	1.00	1.00	1.00	1.00	0.50	0.50	0.50	2.00	1.00	1.00	1.00	1.44
Ammonium Ion ($NH4^+$)	mg/L	1.29	1.29	1.29	1.29	1.29	0.64	0.64	0.64	2.57	1.29	1.29	1.29	1.86
Barium	ug/L	120	363	440	123	55	180	520	1,100	100	257	17	175	230
Bicarbonate (HCO3)	mg/L	310	245	245	203	160	119	91.0	159	623	390	258	200	403
Boron	mg/L	0.10	0.08	0.10	0.20	0.63	0.50	0.30	0.30	0.20	0.20	0.50	0.10	0.14
Calcium	mg/L	380	148	255	330	280	400	310	330	290	220	110	117	240
Carbonate (CO3)	mg/L	3.00	3.00	3.00	3.00	3.00	3.00	3.00	3.00	3.00	3.00	3.00	3.00	3.00
Chloride	mg/L	748	301	618	1,013	1,503	1,505	1,073	1,010	510	494	210	233	485
Fluoride	mg/L	0.20	0.20	0.23	0.20	0.13	0.30	0.20	0.20	0.30	0.20	0.55	0.20	0.25
Magnesium	mg/L	110	41.5	64.3	56.5	59.5	110	51.0	82.0	120	55.0	40.0	31.0	81.6
Nitrate as N	mg/L	7.00	8.50	5.50	7.33	2.93	13.0	8.00	12.0	3.0	4.6	2.3	7.9	4.9
Nitrate Ion ($NO3^-$)	mg/L	31.0	37.6	24.4	32.4	13.0	57.6	35.4	53.1	13.3	20.4	10.2	34.9	21.8
Nitrite as N	mg/L	0.01	0.01	0.01	0.01	0.01	0.01	0.01	0.01	0.01	0.07	0.01	0.03	0.01
Nitrite Ion ($NO2^-$)	mg/L	0.03	0.03	0.03	0.03	0.03	0.03	0.03	0.03	0.03	0.23	0.03	0.10	0.05
pH	pH units	6.80	6.90	7.05	7.48	7.50	6.90	7.10	7.20	6.20	6.90	6.98	6.70	6.45
Potassium	mg/L	6.30	8.90	9.00	9.43	9.98	7.00	11.0	11.0	11.0	9.0	4.4	4.6	8.91
Reactive Silica	mg/L	53.8	50.9	55.4	31.9	23.3	38.0	24.0	37.0	67.0	55.4	47.4	66.8	63.1
Sodium	mg/L	130	84.3	128	345	750	360	300	180	240	200	205	80	167
Strontium	ug/L	1,475	588	1,700	3,000	1,900	2,450	2,233	1,800	1,512	2,945	505	590	1,370
Sulfate	mg/L	243	41.8	47.3	115	224	130	40.0	16.0	528	70.0	333.0	64.0	264.6
Temperature at Collection - °C	deg C	21.6	21.8	21.4	21.6	21.5	21.3	23.0	22.5	21.5	22.3	21.9	22.0	21.6
Total Dissolved Solids	mg/L	2,038	872	1,448	**2,290**	**2,810**	**2,594**	2,026	1,979	2,005	1,460	1,080	782	1,548
Calculated TDS														1,740

Table D-4 Water Quality Projections – Modified WQ - High Silica Water - w/o Wells 75 and 85

Parameter	Unit	Well 76	Well 81	Well 82	Well 83	Well 84	Well 86	Well 87	Well 88	Well 75	Well 77	Well 85	Well 89	Blend
Flow	gpm	0	0	850	0	0	0	0	0	0	250	0	500	1,600
Ammonia as N	mg/L	1.00	1.00	1.00	1.00	1.00	0.50	0.50	0.50	2.00	1.00	1.00	1.00	1.0
Ammonium Ion ($NH4^+$)	mg/L	1.29	1.29	1.29	1.29	1.29	0.64	0.64	0.64	2.57	1.29	1.29	1.29	1.3
Barium	ug/L	120	363	440	123	55	180	520	1,100	100	257	17	175	329
Bicarbonate (HCO3)	mg/L	310	245	245	203	160	119	91.0	159	623	390	258	200	254
Boron	mg/L	0.10	0.08	0.10	0.20	0.63	0.50	0.30	0.30	0.20	0.20	0.50	0.10	0.1
Calcium	mg/L	380	148	255	330	280	400	310	330	290	220	110	117	206
Carbonate (CO3)	mg/L	3.00	3.00	3.00	3.00	3.00	3.00	3.00	3.00	3.00	3.00	3.00	3.00	3.0
Chloride	mg/L	748	301	618	1,013	1,503	1,505	1,073	1,010	510	494	210	233	478
Fluoride	mg/L	0.20	0.20	0.23	0.20	0.13	0.30	0.20	0.20	0.30	0.20	0.55	0.20	0.2
Magnesium	mg/L	110	41.5	64.3	56.5	59.5	110	51.0	82.0	120	55.0	40.0	31.0	52.4
Nitrate as N	mg/L	7.00	8.50	5.50	7.33	2.93	13.0	8.00	12.0	3.0	4.6	2.3	7.9	6.1
Nitrate Ion ($NO3^-$)	mg/L	31.0	37.6	24.4	32.4	13.0	57.6	35.4	53.1	13.3	20.4	10.2	34.9	27.0
Nitrite as N	mg/L	0.01	0.01	0.01	0.01	0.01	0.01	0.01	0.01	0.01	0.07	0.01	0.03	0.0
Nitrite Ion ($NO2^-$)	mg/L	0.03	0.03	0.03	0.03	0.03	0.03	0.03	0.03	0.03	0.23	0.03	0.10	0.1
pH	pH units	6.80	6.90	7.05	7.48	7.50	6.90	7.10	7.20	6.20	6.90	6.98	6.70	6.9
Potassium	mg/L	6.30	8.90	9.00	9.43	9.98	7.00	11.0	11.0	11.0	9.0	4.4	4.6	7.6
Reactive Silica	mg/L	53.8	50.9	**55.4**	31.9	23.3	38.0	24.0	37.0	67.0	55.4	47.4	**66.8**	**58.9**
Sodium	mg/L	130	84.3	128	345	750	360	300	180	240	200	205	80	124
Strontium	ug/L	1,475	588	1,700	3,000	1,900	2,450	2,233	1,800	1,512	2,945	505	590	1548
Sulfate	mg/L	243	41.8	47.3	115	224	130	40.0	16.0	528	70.0	333.0	64.0	56.0
Temperature at Collection - °C	deg C	21.6	21.8	21.4	21.6	21.5	21.3	23.0	22.5	21.5	22.3	21.9	22.0	21.7
Total Dissolved Solids	mg/L	2,038	872	1,448	2,290	2,810	2,594	2,026	1,979	2,005	1,460	1,080	782	1,242
Calculated TDS														

Table D-5 Water Quality Projections –All wells except for Wells with high TDS - Wells 84 and 86

	Unit	Well 76	Well 81	Well 82	Well 83	Well 84	Well 86	Well 87	Well 88	Well 75	Well 77	Well 85	Well 89	Blend
Flow	gpm	1,600	750	1000	750	0	0	750	1000	1000	250	1400	500	9,000
Ammonia as N	mg/L	1.00	1.00	1.00	1.00	1.00	0.50	0.50	0.50	2.00	1.00	1.00	1.00	1.01
Ammonium Ion ($NH4^+$)	mg/L	1.29	1.29	1.29	1.29	1.29	0.64	0.64	0.64	2.57	1.29	1.29	1.29	1.30
Barium	ug/L	120	363	440	123	55	180	520	1,100	100	257	17	175	307
Bicarbonate (HCO3)	mg/L	310	245	245	203	160	119	91.0	159	623	390	258	200	276
Boron	mg/L	0.10	0.08	0.10	0.20	0.63	0.50	0.30	0.30	0.20	0.20	0.50	0.10	0.22
Calcium	mg/L	380	148	255	330	280	400	310	330	290	220	110	117	260
Carbonate (CO3)	mg/L	3.00	3.00	3.00	3.00	3.00	3.00	3.00	3.00	3.00	3.00	3.00	3.00	3.00
Chloride	mg/L	748	301	618	1,013	1,503	1,505	1,073	1,010	510	494	210	233	629
Fluoride	mg/L	0.20	0.20	0.23	0.20	0.13	0.30	0.20	0.20	0.30	0.20	0.55	0.20	0.27
Magnesium	mg/L	110	41.5	64.3	56.5	59.5	110	51.0	82.0	120	55.0	40.0	31.0	71.0
Nitrate as N	mg/L	7.00	8.50	5.50	7.33	2.93	13.0	8.00	12.0	3.0	4.6	2.3	7.9	6.43
Nitrate Ion ($NO3^-$)	mg/L	31.0	37.6	24.4	32.4	13.0	57.6	35.4	53.1	13.3	20.4	10.2	34.9	28.5
Nitrite as N	mg/L	0.01	0.01	0.01	0.01	0.01	0.01	0.01	0.01	0.01	0.07	0.01	0.03	0.01
Nitrite Ion ($NO2^-$)	mg/L	0.03	0.03	0.03	0.03	0.03	0.03	0.03	0.03	0.03	0.23	0.03	0.10	0.04
pH	pH units	6.80	6.90	7.05	7.48	7.50	6.90	7.10	7.20	6.20	6.90	6.98	6.70	6.78
Potassium	mg/L	6.30	8.90	9.00	9.43	9.98	7.00	11.0	11.0	11.0	9.0	4.4	4.6	8.20
Reactive Silica	mg/L	53.8	50.9	55.4	31.9	23.3	38.0	24.0	37.0	67.0	55.4	47.4	66.8	48.8
Sodium	mg/L	130	84.3	128	345	750	360	300	180	240	200	205	80	187
Strontium	ug/L	1,475	588	1,700	3,000	1,900	2,450	2,233	1,800	1,512	2,945	505	590	1,497
Sulfate	mg/L	243	41.8	47.3	115	224	130	40.0	16.0	528	70.0	333.0	64.0	183
Temperature at Collection - °C	deg C	21.6	21.8	21.4	21.6	21.5	21.3	23.0	22.5	21.5	22.3	21.9	22.0	21.88
Total Dissolved Solids	mg/L	**2,038**	**872**	**1,448**	**2,290**	**2,810**	**2,594**	**2,026**	**1,979**	**2,005**	**1,460**	**1,080**	**782**	**1,650**
Calculated TDS														1,697

Table D-6 Water Quality Projections – All wells except for Wells with low TDS - Wells 81 and 89

	Unit	Well 76	Well 81	Well 82	Well 83	Well 84	Well 86	Well 87	Well 88	Well 75	Well 77	Well 85	Well 89	Blend
Flow	gpm	1,600	0	1000	750	750	1,300	750	1000	1000	250	1400	0	9,800
Ammonia as N	mg/L	1.00	1.00	1.00	1.00	1.00	0.50	0.50	0.50	2.00	1.00	1.00	1.00	0.95
Ammonium Ion ($NH4^+$)	mg/L	1.29	1.29	1.29	1.29	1.29	0.64	0.64	0.64	2.57	1.29	1.29	1.29	1.22
Barium	ug/L	120	363	440	123	55	180	520	1,100	100	257	17	175	273
Bicarbonate (HCO3)	mg/L	310	245	245	203	160	119	91.0	159	623	390	258	200	253
Boron	mg/L	0.10	0.08	0.10	0.20	0.63	0.50	0.30	0.30	0.20	0.20	0.50	0.10	0.31
Calcium	mg/L	380	148	255	330	280	400	310	330	290	220	110	117	296
Carbonate (CO3)	mg/L	3.00	3.00	3.00	3.00	3.00	3.00	3.00	3.00	3.00	3.00	3.00	3.00	3.00
Chloride	mg/L	748	301	618	1,013	1,503	1,505	1,073	1,010	510	494	210	233	857
Fluoride	mg/L	0.20	0.20	0.23	0.20	0.13	0.30	0.20	0.20	0.30	0.20	0.55	0.20	0.27
Magnesium	mg/L	110	41.5	64.3	56.5	59.5	110	51.0	82.0	120	55.0	40.0	31.0	79.6
Nitrate as N	mg/L	7.00	8.50	5.50	7.33	2.93	13.0	8.00	12.0	3.0	4.6	2.3	7.9	6.80
Nitrate Ion ($NO3^-$)	mg/L	31.0	37.6	24.4	32.4	13.0	57.6	35.4	53.1	13.3	20.4	10.2	34.9	30
Nitrite as N	mg/L	0.01	0.01	0.01	0.01	0.01	0.01	0.01	0.01	0.01	0.07	0.01	0.03	0.01
Nitrite Ion ($NO2^-$)	mg/L	0.03	0.03	0.03	0.03	0.03	0.03	0.03	0.03	0.03	0.23	0.03	0.10	0.04
pH	pH units	6.80	6.90	7.05	7.48	7.50	6.90	7.10	7.20	6.20	6.90	6.98	6.70	6.82
Potassium	mg/L	6.30	8.90	9.00	9.43	9.98	7.00	11.0	11.0	11.0	9.0	4.4	4.6	8.30
Reactive Silica	mg/L	53.8	50.9	55.4	31.9	23.3	38.0	24.0	37.0	67.0	55.4	47.4	66.8	44
Sodium	mg/L	130	84.3	128	345	750	360	300	180	240	200	205	80	266
Strontium	ug/L	1,475	588	1,700	3,000	1,900	2,450	2,233	1,800	1,512	2,945	505	590	1,770
Sulfate	mg/L	243	41.8	47.3	115	224	130	40.0	16.0	528	70.0	333.0	64.0	196
Temperature at Collection - °C	deg C	21.6	21.8	21.4	21.6	21.5	21.3	23.0	22.5	21.5	22.3	21.9	22.0	21.8
Total Dissolved Solids	mg/L	**2,038**	**872**	**1,448**	**2,290**	**2,810**	**2,594**	**2,026**	**1,979**	**2,005**	**1,460**	**1,080**	**782**	1,968
Calculated TDS														2,036

Table D-7 Water Quality Projections – Highest Alkalinity Water - A blend of Well 76 and Well 77

Parameter	Unit	Well 76	Well 81	Well 82	Well 83	Well 84	Well 86	Well 87	Well 88	Well 75	Well 77	Well 85	Well 89	Blend
Flow	gpm	1,600	0	0	0	0	0	0	0	0	250	0	0	1,850
Ammonia as N	mg/L	1.00	1.00	1.00	1.00	1.00	0.50	0.50	0.50	2.00	1.00	1.00	1.00	1.00
Ammonium Ion ($NH4^+$)	mg/L	1.29	1.29	1.29	1.29	1.29	0.64	0.64	0.64	2.57	1.29	1.29	1.29	1.29
Barium	ug/L	120	363	440	123	55	180	520	1,100	100	257	17	175	139
Bicarbonate (HCO3)	mg/L	310	245	245	203	160	119	91.0	159	623	390	258	200	**321**
Boron	mg/L	0.10	0.08	0.10	0.20	0.63	0.50	0.30	0.30	0.20	0.20	0.50	0.10	0.11
Calcium	mg/L	380	148	255	330	280	400	310	330	290	220	110	117	358
Carbonate (CO3)	mg/L	3.00	3.00	3.00	3.00	3.00	3.00	3.00	3.00	3.00	3.00	3.00	3.00	3.00
Chloride	mg/L	748	301	618	1,013	1,503	1,505	1,073	1,010	510	494	210	233	714
Fluoride	mg/L	0.20	0.20	0.23	0.20	0.13	0.30	0.20	0.20	0.30	0.20	0.55	0.20	0.20
Magnesium	mg/L	110	41.5	64.3	56.5	59.5	110	51.0	82.0	120	55.0	40.0	31.0	103
Nitrate as N	mg/L	7.00	8.50	5.50	7.33	2.93	13.0	8.00	12.0	3.0	4.6	2.3	7.9	6.7
Nitrate Ion ($NO3^-$)	mg/L	31.0	37.6	24.4	32.4	13.0	57.6	35.4	53.1	13.3	20.4	10.2	34.9	29.6
Nitrite as N	mg/L	0.01	0.01	0.01	0.01	0.01	0.01	0.01	0.01	0.01	0.07	0.01	0.03	0.02
Nitrite Ion ($NO2^-$)	mg/L	0.03	0.03	0.03	0.03	0.03	0.03	0.03	0.03	0.03	0.23	0.03	0.10	0.06
pH	pH units	6.80	6.90	7.05	7.48	7.50	6.90	7.10	7.20	6.20	6.90	6.98	6.70	6.81
Potassium	mg/L	6.30	8.90	9.00	9.43	9.98	7.00	11.0	11.0	11.0	9.0	4.4	4.6	6.7
Reactive Silica	mg/L	53.8	50.9	55.4	31.9	23.3	38.0	24.0	37.0	67.0	55.4	47.4	66.8	54.0
Sodium	mg/L	130	84.3	128	345	750	360	300	180	240	200	205	80	139
Strontium	ug/L	1,475	588	1,700	3,000	1,900	2,450	2,233	1,800	1,512	2,945	505	590	1,674
Sulfate	mg/L	243	41.8	47.3	115	224	130	40.0	16.0	528	70.0	333.0	64.0	219.6
Temperature at Collection - °C	deg C	21.6	21.8	21.4	21.6	21.5	21.3	23.0	22.5	21.5	22.3	21.9	22.0	21.7
Total Dissolved Solids	mg/L	2,038	872	1,448	**2,290**	**2,810**	**2,594**	2,026	1,979	2,005	1,460	1,080	782	1,960
Calculated TDS														1,949

Table D-8 Water Quality Projections – Average Alkalinity Water - Blend of All Wells except for Well 81 and Well 89

Parameter	Unit	Well 76	Well 81	Well 82	Well 83	Well 84	Well 86	Well 87	Well 88	Well 75	Well 77	Well 85	Well 89	Blend
Flow	gpm	1,600	0	1000	750	750	1,300	750	1000	0	250	1400	0	8,800
Ammonia as N	mg/L	1.00	1.00	1.00	1.00	1.00	0.50	0.50	0.50	2.00	1.00	1.00	1.00	0.83
Ammonium Ion ($NH4^+$)	mg/L	1.29	1.29	1.29	1.29	1.29	0.64	0.64	0.64	2.57	1.29	1.29	1.29	1.06
Barium	ug/L	120	363	440	123	55	180	520	1,100	100	257	17	175	293
Bicarbonate (HCO3)	mg/L	310	245	245	203	160	119	91.0	159	623	390	258	200	**211**
Boron	mg/L	0.10	0.08	0.10	0.20	0.63	0.50	0.30	0.30	0.20	0.20	0.50	0.10	0.32
Calcium	mg/L	380	148	255	330	280	400	310	330	290	220	110	117	297
Carbonate (CO3)	mg/L	3.00	3.00	3.00	3.00	3.00	3.00	3.00	3.00	3.00	3.00	3.00	3.00	3.00
Chloride	mg/L	748	301	618	1,013	1,503	1,505	1,073	1,010	510	494	210	233	897
Fluoride	mg/L	0.20	0.20	0.23	0.20	0.13	0.30	0.20	0.20	0.30	0.20	0.55	0.20	0.27
Magnesium	mg/L	110	41.5	64.3	56.5	59.5	110	51.0	82.0	120	55.0	40.0	31.0	75.0
Nitrate as N	mg/L	7.00	8.50	5.50	7.33	2.93	13.0	8.00	12.0	3.0	4.6	2.3	7.9	7.23
Nitrate Ion ($NO3^-$)	mg/L	31.0	37.6	24.4	32.4	13.0	57.6	35.4	53.1	13.3	20.4	10.2	34.9	32.0
Nitrite as N	mg/L	0.01	0.01	0.01	0.01	0.01	0.01	0.01	0.01	0.01	0.07	0.01	0.03	0.01
Nitrite Ion ($NO2^-$)	mg/L	0.03	0.03	0.03	0.03	0.03	0.03	0.03	0.03	0.03	0.23	0.03	0.10	0.04
pH	pH units	6.80	6.90	7.05	7.48	7.50	6.90	7.10	7.20	6.20	6.90	6.98	6.70	7.01
Potassium	mg/L	6.30	8.90	9.00	9.43	9.98	7.00	11.0	11.0	11.0	9.0	4.4	4.6	8.00
Reactive Silica	mg/L	53.8	50.9	55.4	31.9	23.3	38.0	24.0	37.0	67.0	55.4	47.4	66.8	41.8
Sodium	mg/L	130	84.3	128	345	750	360	300	180	240	200	205	80	269
Strontium	ug/L	1,475	588	1,700	3,000	1,900	2,450	2,233	1,800	1,512	2,945	505	590	1,800
Sulfate	mg/L	243	41.8	47.3	115	224	130	40.0	16.0	528	70.0	333.0	64.0	158
Temperature at Collection - °C	deg C	21.6	21.8	21.4	21.6	21.5	21.3	23.0	22.5	21.5	22.3	21.9	22.0	21.8
Total Dissolved Solids	mg/L	2,038	872	1,448	**2,290**	**2,810**	**2,594**	2,026	1,979	2,005	1,460	1,080	782	1,964
Calculated TDS														1,727

Table D-9 Water Quality Projections – Lowest Alkalinity Water - Blend of Well 87 and Well 88

	Unit	Well 76	Well 81	Well 82	Well 83	Well 84	Well 86	Well 87	Well 88	Well 75	Well 77	Well 85	Well 89	Blend
Flow	gpm	0	0	0	0	0	0	750	1000	0	0	0	0	1,750
Ammonia as N	mg/L	1.00	1.00	1.00	1.00	1.00	0.50	0.50	0.50	2.00	1.00	1.00	1.00	0.50
Ammonium Ion ($NH4^+$)	mg/L	1.29	1.29	1.29	1.29	1.29	0.64	0.64	0.64	2.57	1.29	1.29	1.29	0.64
Barium	ug/L	120	363	440	123	55	180	520	1,100	100	257	17	175	851
Bicarbonate (HCO3)	mg/L	310	245	245	203	160	119	91.0	159	623	390	258	200	**130**
Boron	mg/L	0.10	0.08	0.10	0.20	0.63	0.50	0.30	0.30	0.20	0.20	0.50	0.10	0.30
Calcium	mg/L	380	148	255	330	280	400	310	330	290	220	110	117	321
Carbonate (CO3)	mg/L	3.00	3.00	3.00	3.00	3.00	3.00	3.00	3.00	3.00	3.00	3.00	3.00	3.00
Chloride	mg/L	748	301	618	1,013	1,503	1,505	1,073	1,010	510	494	210	233	1,037
Fluoride	mg/L	0.20	0.20	0.23	0.20	0.13	0.30	0.20	0.20	0.30	0.20	0.55	0.20	0.20
Magnesium	mg/L	110	41.5	64.3	56.5	59.5	110	51.0	82.0	120	55.0	40.0	31.0	68.7
Nitrate as N	mg/L	7.00	8.50	5.50	7.33	2.93	13.0	8.00	12.0	3.0	4.6	2.3	7.9	10.3
Nitrate Ion ($NO3^-$)	mg/L	31.0	37.6	24.4	32.4	13.0	57.6	35.4	53.1	13.3	20.4	10.2	34.9	45.6
Nitrite as N	mg/L	0.01	0.01	0.01	0.01	0.01	0.01	0.01	0.01	0.01	0.07	0.01	0.03	0.01
Nitrite Ion ($NO2^-$)	mg/L	0.03	0.03	0.03	0.03	0.03	0.03	0.03	0.03	0.03	0.23	0.03	0.10	0.03
pH	pH units	6.80	6.90	7.05	7.48	7.50	6.90	7.10	7.20	6.20	6.90	6.98	6.70	7.15
Potassium	mg/L	6.30	8.90	9.00	9.43	9.98	7.00	11.0	11.0	11.0	9.0	4.4	4.6	11.0
Reactive Silica	mg/L	53.8	50.9	55.4	31.9	23.3	38.0	24.0	37.0	67.0	55.4	47.4	66.8	31.4
Sodium	mg/L	130	84.3	128	345	750	360	300	180	240	200	205	80	231
Strontium	ug/L	1,475	588	1,700	3,000	1,900	2,450	2,233	1,800	1,512	2,945	505	590	1,986
Sulfate	mg/L	243	41.8	47.3	115	224	130	40.0	16.0	528	70.0	333.0	64.0	26.3
Temperature at Collection - °C	deg C	21.6	21.8	21.4	21.6	21.5	21.3	23.0	22.5	21.5	22.3	21.9	22.0	22.7
Total Dissolved Solids	mg/L	**2,038**	**872**	**1,448**	**2,290**	**2,810**	**2,594**	**2,026**	**1,979**	**2,005**	**1,460**	**1,080**	**782**	1,999
Calculated TDS														1,907

Appendix E
Topographic Site Map and FEMA Flood Insurance Rate Map

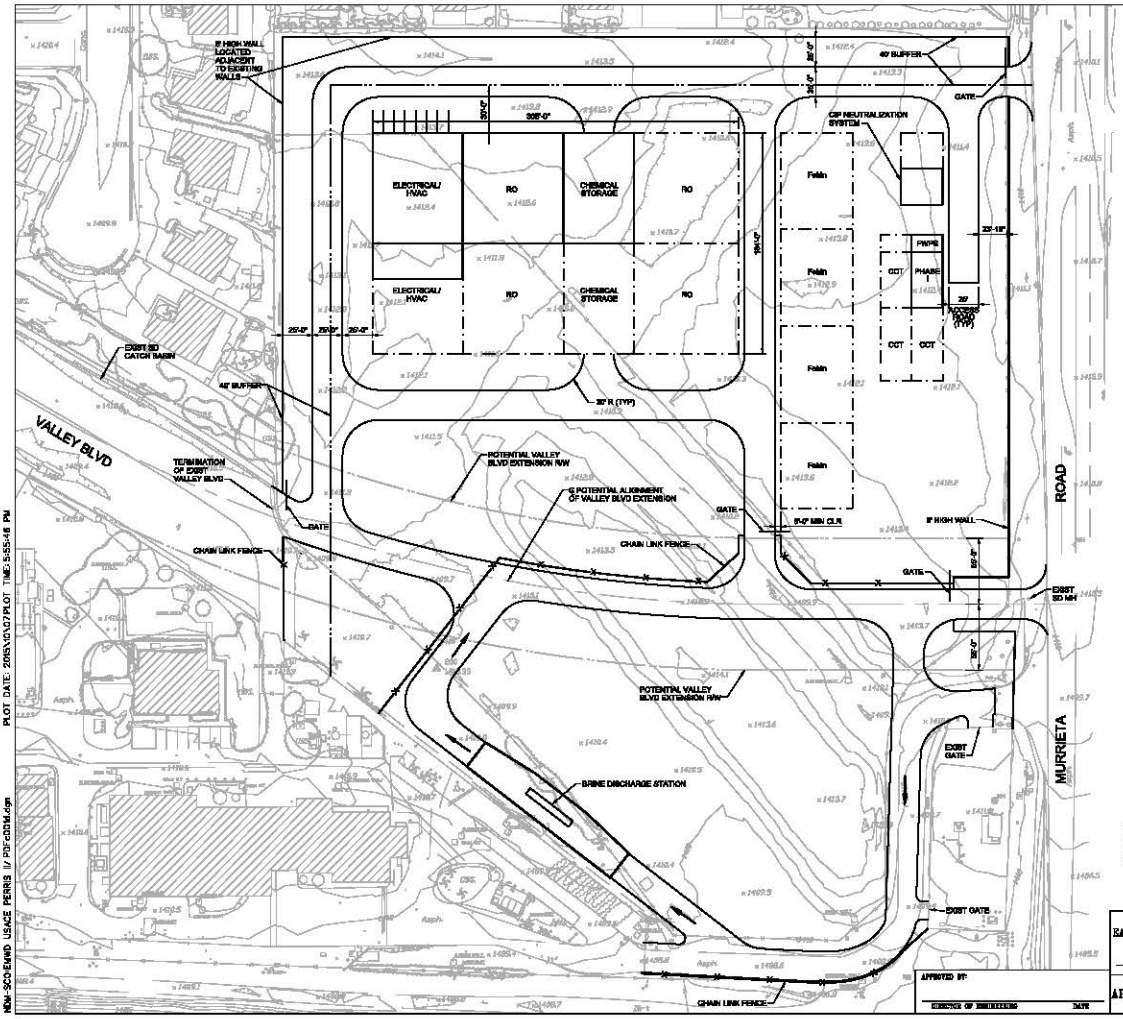

SITE PLAN

1"=40'

NOTES:

1. AERIAL SURVEY DATE: JUNE 18, 2014 (REVISED MAY 29, 2016)
2. AERIAL SURVEY SOURCE: RSP

EASTERN MUNICIPAL WATER DISTRICT		
PROJECT MANAGER		DATE
APPROVALS		INITIAL / DATE
	PROJECT ENG.	
	ELECTRICAL	
	MECHANICAL	
	CIVIL/STRUCTURAL	

REGISTERED PROFESSIONAL ENGINEER — CIVIL — STATE OF CALIFORNIA

APPROVED BY:

CHIEF OF ENGINEERING DATE

CHECKED BY: CDC
DRAWN BY: RDC
DESIGNED BY: CDC

CH2MHILL

EASTERN MUNICIPAL WATER DISTRICT
PERRIS II DESALINATION FACILITY
PERRIS, CALIFORNIA

SITE PLAN

SYMBOL	DESCRIPTION	DATE	APPROVAL
	REVISIONS		

SCALE: 1:0
C-1

SPEC. NO.: NOT APPLICABLE

CADD FILE NAME: 102-4010-dgn

PRELIMINARY

PLOT DATE: 20NOV2017 PLOT TIME: 5:55:48 PM

NDM-SCO-EMWD USACE PERRIS II / PSF-C0314.dgn

LEGEND

SPECIAL FLOOD HAZARD AREAS SUBJECT TO INUNDATION BY THE 1% ANNUAL CHANCE FLOOD

The 1% annual chance flood (100-year flood), also known as the base flood, is the flood that has a 1% chance of being equaled or exceeded in any given year. The Special Flood Hazard Area is the area subject to flooding by the 1% annual chance flood. Areas of Special Flood Hazard include Zones A, AE, AH, AO, AR, A99, V, and VE. The Base Flood Elevation is the water-surface elevation of the 1% annual chance flood.

ZONE A	No Base Flood Elevations determined.
ZONE AE	Base Flood Elevations determined.
ZONE AH	Flood depths of 1 to 3 feet (usually areas of ponding); Base Flood Elevations determined.
ZONE AO	Flood depths of 1 to 3 feet (usually sheet flow on sloping terrain); average depths determined. For areas of alluvial fan flooding, velocities also determined.
ZONE AR	Special Flood Hazard Area formerly protected from the 1% annual chance flood by a flood control system that was subsequently decertified. Zone AR indicates that the former flood control system is being restored to provide protection from the 1% annual chance or greater flood.
ZONE A99	Areas to be protected from 1% annual chance flood event by a Federal flood protection system under construction; no Base Flood Elevations determined.
ZONE V	Coastal flood zone with velocity hazard (wave action); no Base Flood Elevations determined.
ZONE VE	Coastal flood zone with velocity hazard (wave action); Base Flood Elevations determined.

FLOODWAY AREAS IN ZONE AE

The floodway is the channel of a stream plus any adjacent floodplain areas that must be kept free of encroachment so that the 1% annual chance flood can be carried without substantial increases in flood heights.

OTHER FLOOD AREAS

ZONE X	Areas of 0.2% annual chance flood; areas of 1% annual chance flood with average depths of less than 1 foot or with drainage areas less than 1 square mile; and areas protected by levees from 1% annual chance flood.

OTHER AREAS

ZONE X	Areas determined to be outside the 0.2% annual chance floodplain.
ZONE D	Areas in which flood hazards are undetermined, but possible.

e Program at 1-800-638-6620.

MAP SCALE 1" = 1000'

0 500 1,000 1,500 2,000 FEET

NFIP

NATIONAL FLOOD INSURANCE PROGRAM

PANEL 2055H

FIRM

FLOOD INSURANCE RATE MAP

RIVERSIDE COUNTY, CALIFORNIA

AND INCORPORATED AREAS

PANEL 2055 OF 3805

(SEE MAP INDEX FOR FIRM PANEL LAYOUT)

CONTAINS:

COMMUNITY	NUMBER	PANEL	SUFFIX
CANYON LAKE, CITY OF	060749	2055	H
MENIFEE, CITY OF	060700	2055	H
PERRIS, CITY OF	060256	2055	H
RIVERSIDE COUNTY UNINCORPORATED AREAS	060245	2055	H

Notice to User: The Map Number shown below should be used when placing flood insurance policies. The Community Number shown above should be used for insurance applications for the subject community.

MAP NUMBER
06065C2055H

MAP REVISED
AUGUST 18, 2014

Federal Emergency Management Agency

This is an official copy of a portion of the above referenced flood map. It was extracted using F-MIT On-Line. This map does not reflect changes or amendments which may have been made subsequent to the date on the title block. For the latest product information about National Flood Insurance Program flood maps check the FEMA Flood Map Store at www.msc.fema.gov

MAP SCALE 1" = 1000'

0 500 1,000 1,500 2,000 FEET

NFIP

NATIONAL FLOOD INSURANCE PROGRAM

PANEL 2055H

FIRM

FLOOD INSURANCE RATE MAP

RIVERSIDE COUNTY, CALIFORNIA

AND INCORPORATED AREAS

PANEL 2055 OF 3805

(SEE MAP INDEX FOR FIRM PANEL LAYOUT)

CONTAINS:

COMMUNITY	NUMBER	PANEL	SUFFIX
CANYON LAKE, CITY OF	060703	2055	H
MENIFEE, CITY OF	060705	2055	H
PERRIS, CITY OF	060704	2055	H
RIVERSIDE COUNTY	060245	2055	H
UNINCORPORATED AREAS	060251	2055	H

Notice to User: The **Map Number** shown below should be used when placing map orders; the **Community Number** shown above should be used on insurance applications for the subject community.

MAP NUMBER
06065C2055H

MAP REVISED
AUGUST 18, 2014

Federal Emergency Management Agency

This is an official copy of a portion of the above referenced flood map. It was extracted using F-MIT On-Line. This map does not reflect changes or amendments which may have been made subsequent to the date on the title block. For the latest product information about National Flood Insurance Program flood maps check the FEMA Flood Map Store at www.msc.fema.gov

protection system under construction, no Base Flood Elevations determined.

ZONE V Coastal flood zone with velocity hazard (wave action); no Base Flood Elevations determined.

ZONE VE Coastal flood zone with velocity hazard (wave action); Base Flood Elevations determined.

FLOODWAY AREAS IN ZONE AE

The floodway is the channel of a stream plus any adjacent floodplain areas that must be kept free of encroachment so that the 1% annual chance flood can be carried without substantial increases in flood heights.

OTHER FLOOD AREAS

ZONE X Areas of 0.2% annual chance flood; areas of 1% annual chance flood with average depths of less than 1 foot or with drainage areas less than 1 square mile; and areas protected by levees from 1% annual chance flood.

OTHER AREAS

ZONE X Areas determined to be outside the 0.2% annual chance floodplain.

ZONE D Areas in which flood hazards are undetermined, but possible.

COASTAL BARRIER RESOURCES SYSTEM (CBRS) AREAS

OTHERWISE PROTECTED AREAS (OPAs)

CBRS areas and OPAs are normally located within or adjacent to Special Flood Hazard Areas.

1% annual chance floodplain boundary

0.2% annual chance floodplain boundary

Floodway boundary

Zone D boundary

CBRS and OPA boundary

Boundary dividing Special Flood Hazard Area Zones and boundary dividing Special Flood Hazard Areas of different Base Flood Elevations, flood depths, or flood velocities

513 — Base Flood Elevation line and value; elevation in feet*

(EL 987) — Base Flood Elevation value where uniform within zone; elevation in feet*

* Referenced to the North American Vertical Datum of 1988

A — A Cross section line

23 - - - - - 23 Transect line

97°07'30", 32°22'30" Geographic coordinates referenced to the North American Datum of 1983 (NAD 83), Western Hemisphere

4275000mE 1000-meter Universal Transverse Mercator grid ticks, zone 11

6000000 FT 5000-foot grid values: California State Plane coordinate system, Zone VI (FIPSZONE = 406), Lambert projection

DX5510 Bench mark (see explanation in Notes to Users section of this FIRM panel)

• M1.5 River Mile

MAP REPOSITORIES
Refer to Map Repositories List on Map Index

EFFECTIVE DATE OF COUNTYWIDE
FLOOD INSURANCE RATE MAP
August 28, 2008

EFFECTIVE DATE(S) OF REVISION(S) TO THIS PANEL
August 18, 2014: for a description of revisions, see Notice to Users page in the Flood Insurance Study report.

e Program at 1-800-638-6620.

MAP SCALE 1" = 1000'

0 500 1,000 1,500 2,000 FEET

NFIP

NATIONAL FLOOD INSURANCE PROGRAM

PANEL 2055H

FIRM

FLOOD INSURANCE RATE MAP

RIVERSIDE COUNTY, CALIFORNIA

AND INCORPORATED AREAS

PANEL 2055 OF 3805

(SEE MAP INDEX FOR FIRM PANEL LAYOUT)

CONTAINS:

COMMUNITY	NUMBER	PANEL	SUFFIX
CANYON LAKE, CITY OF	060703	2055	H
MENIFEE, CITY OF	060156	2055	H
RIVERSIDE, CITY OF	060250	2055	H
RIVERSIDE COUNTY	060245	2055	H
UNINCORPORATED AREAS			

Notice to User: The **Map Number** shown below should be used when placing map orders; the **Community Number** shown above should be used on insurance applications for the subject community.

MAP NUMBER
06065C2055H

MAP REVISED
AUGUST 18, 2014

Federal Emergency Management Agency

This is an official copy of a portion of the above referenced flood map. It was extracted using F-MIT On-Line. This map does not reflect changes or amendments which may have been made subsequent to the date on the title block. For the latest product information about National Flood Insurance Program flood maps check the FEMA Flood Map Store at www.msc.fema.gov

Appendix F
RO Building Code Analysis

RO Building Code Analysis

Project: Eastern Municipal Water District - Perris II Desalination Facility
Facility: Operations Building
Project No.: 658974
Location: Perris, California
Date: 7.20.15 **Analysis By:** Geoff Kirsten

Applicable Codes: 2013 California Building Code (CBC)
2013 California Fire Code (CFC)
2013 California Energy Code (CEC)
2013 California Plumbing Code (CPC)
2013 California Green Building Standards Code (CGBSC)

Officials: **Contacted:** **Telephone:**
Building Official:
Fire Marshal:

Facility Description:
The RO Building will utilize a pre-engineered metal building wall and roof structure. Wall cladding will consist of insulated metal walls panels over metal girts as the primary wall system. Additional materials will be applied to the exterior of the insulated metal wall panel including CMU veneer wainscot and metal grilles. Single-ply membrane roofing and rigid insulation will be provided over a structural deck on metal purlins.

Use and Occupancy Classifications: CBC Chapter 3, Sections 306, 307 & 311

Occupancy: Mixed
F-2 at RO Process Room, Restrooms, Hall, Mechanical Room, Maintenance Shop, Control Room, SCADA Room and Electrical Room.
(Control Room and SCADA Room are incidental to F occupancy and less than 10% of total F area.)
H-3/H-4 at Chemical Storage Room #1
H-2 at Chemical Storage Room #2

Construction Type: IIB CBC Sec 602.2

Occupancy Separation: CBC Table No. 508.4

F-2 to H-3/H-4 = 2 hr (with automatic sprinkler system)
F-2 to H-2 = 3 hr (with automatic sprinkler system)
H-2 to H-3/H-4 = 1 hr (with automatic sprinkler system)

Basic Allowable Floor Area: CBC Table No. 503

F-2 = 23,000 s.f.
H-2 = 7,000 s.f.
H-3 = 14,000 s.f.
H-4 = 17,500 s.f.

Actual Area:

F-2 = 10,014 + 365 (Control Room & SCADA Room) = 9,129 s.f.
H-2 = 252 s.f.
H-3/H-4 = 4,678 s.f.
Total = 15,309 s.f.

Allowable Height: CBC Table No. 503

F-2, H-2, H-3, & H-4 = 55′-0″

Actual Height

22′-0″

Allowable Number of Stories: CBC Table No. 503

F-2 = Three
H-2 = One
H-3 = Two
H-4 = Three

Actual Number of Stories:

One

Fire-Resistive Requirements for Building Elements: CBC Table No. 601

For Type IIB construction a 0 hour fire-resistance rating is required for all listed building elements.

Fire-Resistive Requirements for
Exterior Walls Based on Fire Separation Distance: CBC Table No. 602

The building will be more than 30 feet from the plant property line and from adjacent buildings.

F-2 = >10 = 0 hr
H = >30 = 0 hr

Roof Covering: CBC Table No. 1505.1

Class C roof covering required. Class A roof covering will be provided.

Occupant Load Factor: CBC Table No. 1004.1.2

Group F & H (industrial areas) = 1 per 100sf = 15,309/100 = 154

Actual Number of Occupants:

Not Normally Occupied

Area Separation: CBC Sec. 503.1 and Sec 708

None Required

Exit Passageways CBC Sec. 1023.2
36″wide minimum (when serving an occupant load of 50 or less)

Min. Number of Exits Required CBC Sec. 1015.1 & Table No. 1015.1

F = 49 or less calculated occupants requires one exit.
H-2 = 3 or less calculated occupants requires one exit.
H-3/H-4 = 10 or less calculated occupants requires one exit.

Max Travel Distance to Exit: CBC Table No. 1016.1

F-2 = 300 feet maximum to an exit or exit-access door in an unsprinkled building.
H-2 = 100 feet maximum to an exit or exit-access door in a sprinkled building.
H-3 = 150 feet maximum to an exit or exit-access door in a sprinkled building.
H-4 = 175 feet maximum to an exit or exit-access door in a sprinkled building.

Egress Through Intervening Spaces: CBC Sec. 1014.2

Not permitted unless adjoining rooms or areas are accessory to the area served.

Common Path of Egress Travel: CBC Sec. 1014.3

F-2 & H-4 = 75 feet
H-2 & H-3 = 25 feet

Corridor: CBC Sec 1018

Corridor width is 44 inches minimum (CBC Sec 1018.2)
At F & H-4 occupancies with occupant load greater than 30 provide 1 HR rated enclosure. At H-2/H-3 provide 1 HR rated enclosure regardless of occupant load.

Ceiling Height and Headroom: CBC Sec. 1003.2 & 1003.3.1

6′-8″minimum headroom height for a maximum of 50% of the ceiling. 7′-6″ minimum ceiling height for means of egress.

Floor Elevation at Doors: CBC 1008.1.5

Landings shall be at the same elevation at both sides of door. Exterior landings can slope 2% grade maximum.

Threshold: CBC 1008.1.7

½" minimum high with beveled edges.

Panic Hardware: CBC Sec. 1008.1.10

Required at H occupancies.

Fire Protection and Detection: CBC Sec. 903.2.5
CFC Sec. 903.2 & NFPA 72

An automatic fire-sprinkler system is required at the H occupancies.
Hand-held fire extinguishers will be provided throughout the building.

Handicapped Accessibility: CBC Sec. 11B-201.1

F-2 and H buildings are required to meet accessibility requirements.

(Equipment spaces that are not customarily occupied are exempt from accessibility requirements. (CBC Sec 11B - 203.5))

Minimum Plumbing Fixtures: CPC Table No. 422.1

Plumbing Fixtures Occupant Load Factor: F and H = 2,000

Total Calculated Occupants is 8 ((15,309/2000 = 7.6 (8)). One water closet, lavatory, drinking fountain and service sink required. Gender separated facilities are not required in structures with a total occupant load of 10 or less (CPC Sec 422.2 exception 2).

Two unisex facilities provided each having one water closet and lavatory. A single drinking fountain and service sink will also be provided.

Hazardous Identification Signage: CFC Sec. 2703.6

Hazardous Materials: CFC Table 5003.1.1(2) & 5003.1.1(1)
Hazardous Materials Classification Guide, ICBO

Sodium Hypochlorite (0.8%) CAS# 7681-52-9
- Hazard Classification:
  - Irritant (health hazard)
    - Maximum Stored Amount: 7,000 gallons.
    - Stored amount not limited
    - Secondary containment not required for indoor storage.

Sulfuric Acid (93%) CAS# 7664-93-9
- Hazard Classification:
  - Water Reactive, Corrosive, and Toxic (physical and health hazard)

- Maximum Stored Amount: 1,500 gallons
- Secondary containment required for indoor storage.

TI (Anionic co-polymer) (100%)
- Hazard Classification:
  - Irritant (health hazard)
    - Maximum Stored Amount: 1,000 gallons
    - Secondary containment required for indoor storage.

Sodium Hydroxide (50%) CAS# 1310-73-2
- Hazard Classification:
  - Corrosive (health hazard)
    - Maximum Stored Amount: 7,000 gallons
    - Secondary containment required for indoor storage.

Citric Acid (50%) CAS# 77-92-9
- Hazard Classification:
  - Irritant (health hazard)
    - Maximum Stored Amount: 1,000 gallons
    - Secondary containment not required for indoor storage.

Ortho-poly Phosphate (corrosion inhibitor) (100%) CAS # 7664-38-2
- Hazard Classification:
  - Corrosive (health hazard)
    - Maximum Stored Amount: 1,000 gallons
    - Secondary containment required for indoor storage.

Aqueous Ammonia (19%) CAS# 7664-41-7
- Hazard Classification:
  - Corrosive (health hazard)
    - Maximum Stored Amount: 1,000 gallons
    - Secondary containment required for indoor storage.

Hydrofluosilicic Acid (25%) CAS# 16961-83-4
- Hazard Classification:
  - Corrosive (health hazard)
    - Maximum Stored Amount: 1,000 gallons
    - Secondary containment required for indoor storage.

Appendix G
Finished Water Pump Station Building Code Analysis

Finished Water Pump Station Code Analysis

Project: Eastern Municipal Water District - Perris II Desalination Facility
Facility: Finished Water Pump Station Building
Project No.: 658974
Location: Perris, California
Date: 7.20.15 **Analysis By:** Geoff Kirsten

Applicable Codes: 2013 California Building Code (CBC)
2013 California Fire Code (CFC)
2013 California Energy Code (CEC)
2013 California Plumbing Code (CPC)
2013 California Green Building Standards Code (CGBSC)

Officials: **Contacted:** **Telephone:**
Building Official:
Fire Marshal:

Facility Description:
The Finished Water Pump Station Building will utilize a pre-engineered metal building wall and roof structure. Wall cladding will consist of insulated metal walls panels over metal girts as the primary wall system. Additional materials will be applied to the exterior of the insulated metal wall panel including CMU veneer wainscot and metal grilles. Single-ply membrane roofing and rigid insulation will be provided over a structural deck on metal purlins.

Use and Occupancy Classifications: CBC Chapter 3, Sections 306
Occupancy: F-2

Construction Type: IIB CBC Sec 602.2

Occupancy Separation: CBC Table No. 508.4

N/A

Basic Allowable Floor Area: CBC Table No. 503

F-2 = 23,000 s.f.

Actual Area:

F-2 = 520

Allowable Height: CBC Table No. 503

F-2 = 55′-0″

Actual Height

14′-8″

Allowable Number of Stories: CBC Table No. 503

F-2 = Three

Actual Number of Stories:

One

Fire-Resistive Requirements for Building Elements: CBC Table No. 601

For Type IIB construction a 0 hour fire-resistance rating is required for all listed building elements.

Fire-Resistive Requirements for Exterior Walls Based on Fire Separation Distance: CBC Table No. 602

The building will be more than 30 feet from the plant property line and from adjacent buildings.

F-2 = >10 = 0 hr

Roof Covering: CBC Table No. 1505.1

Class C roof covering required. Class A roof covering will be provided.

Occupant Load Factor: CBC Table No. 1004.1.2

Group F (industrial) = 1 per 100sf = 520/100 = 5.2 (6)

Actual Number of Occupants:

Not Normally Occupied

Area Separation: CBC Sec. 503.1 and Sec 708

None Required

Min. Number of Exits Required CBC Sec. 1015.1 & Table No. 1015.1

F = 49 or less calculated occupants requires one exit.

Max Travel Distance to Exit: CBC Table No. 1016.1

F-2 = 300 feet maximum to an exit or exit-access door in an unsprinkled building.

Common Path of Egress Travel: CBC Sec. 1014.3

F-2 = 75 feet

Ceiling Height and Headroom: CBC Sec. 1003.2 & 1003.3.1

6′-8″minimum headroom height for a maximum of 50% of the ceiling. 7′-6″ minimum ceiling height for means of egress.

Floor Elevation at Doors: CBC 1008.1.5

Landings shall be at the same elevation at both sides of door. Exterior landings can slope 2% grade maximum.

Threshold: CBC 1008.1.7

½″ minimum high with beveled edges.

Fire Protection and Detection: CBC Sec. 903.2.5
CFC Sec. 903.2 & NFPA 72

An automatic fire-sprinkler system is not required.
Hand-held fire extinguishers will be provided throughout the building.

Handicapped Accessibility: CBC Sec. 11B-201.1

(Equipment spaces that are not customarily occupied are exempt from accessibility requirements. (CBC Sec 11B - 203.5))

Minimum Plumbing Fixtures: CPC Table No. 422.1

Plumbing Fixtures provided in nearby Operations Building.

Appendix H
PDF II Elevations Studies A, B, C, and D

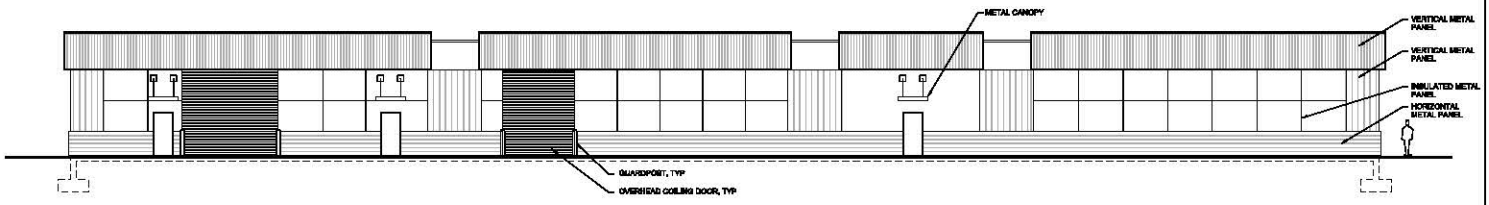

NORTH ELEVATION STUDY A
1/16" = 1'-0"

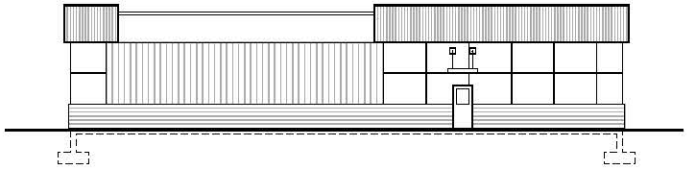

EAST ELEVATION STUDY A
1/16" = 1'-0"

WEST ELEVATION STUDY A
1/16" = 1'-0"

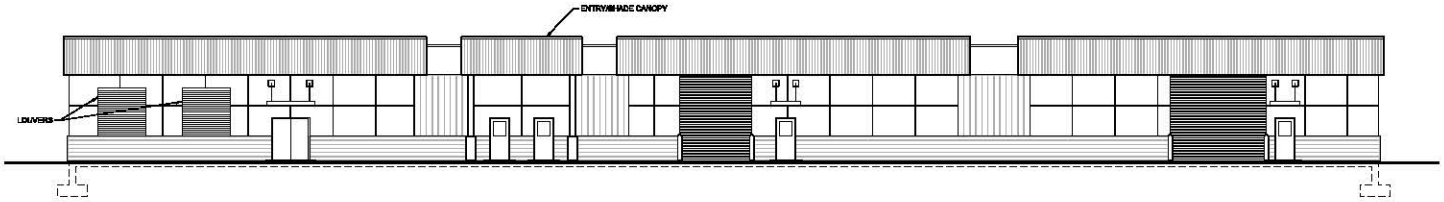

SOUTH ELEVATION STUDY A
1/16" = 1'-0"

CH2MHILL.

0.75″ margin

0.75 pt line, black

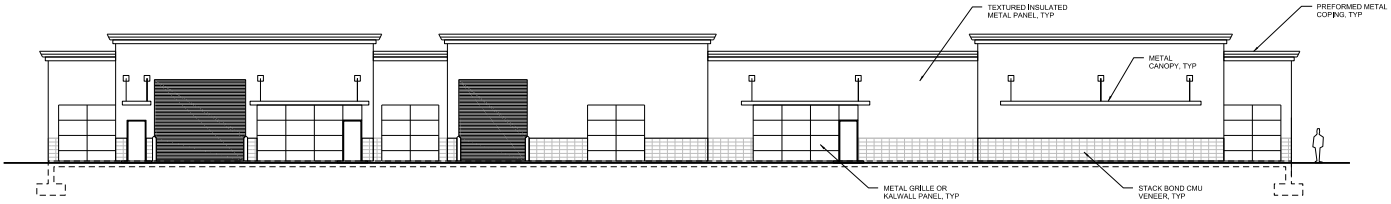

NORTH ELEVATION STUDY B

1/16" = 1'-0"

0.75″ margin

0.75″ margin

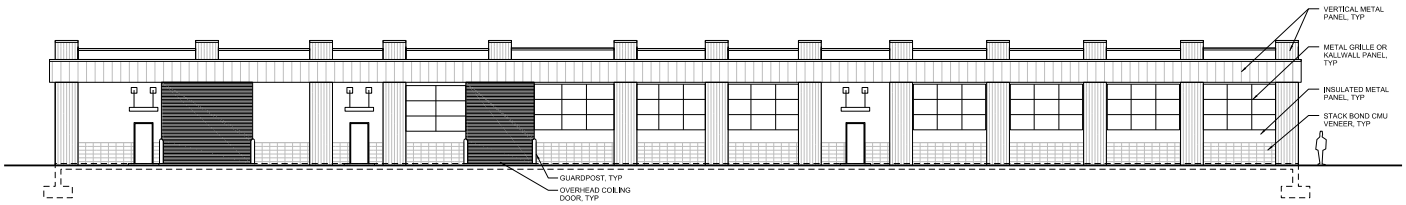

NORTH ELEVATION STUDY C

1/16" = 1'-0"

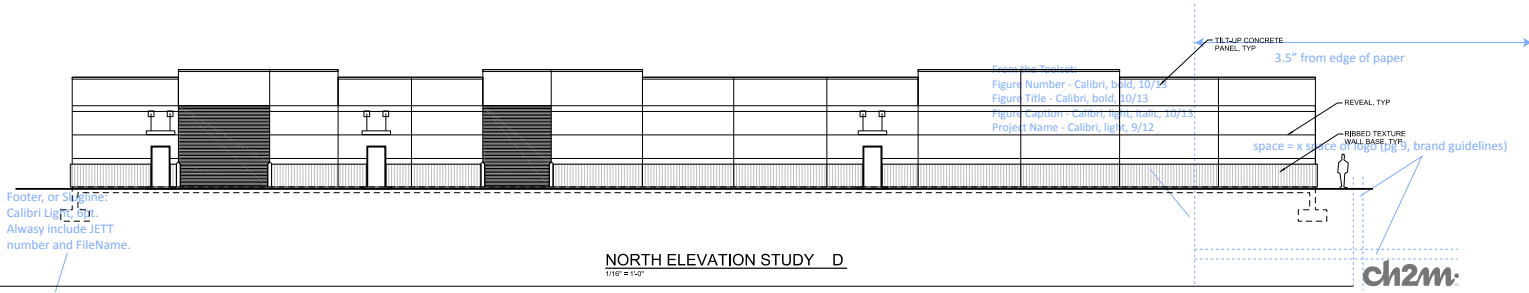

NORTH ELEVATION STUDY D

1/16" = 1'-0"

0.75 pt line, black

0.75″ margin

Appendix I
PDF II Color Studies

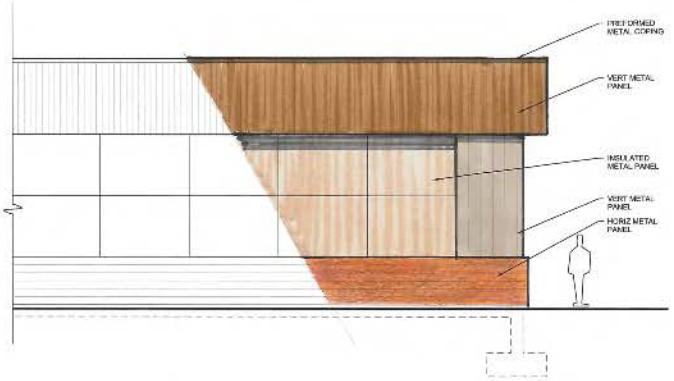

CHARACTER SKETCH STUDY A
1/8" = 1'-0"

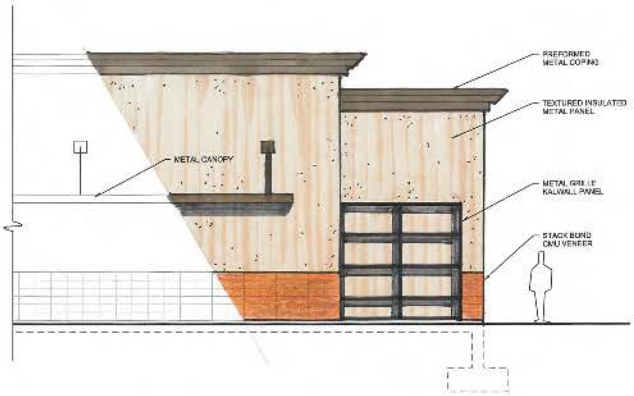

CHARACTER SKETCH STUDY B
1/8" = 1'-0"

CHARACTER SKETCH STUDY C
1/8" = 1'-0"

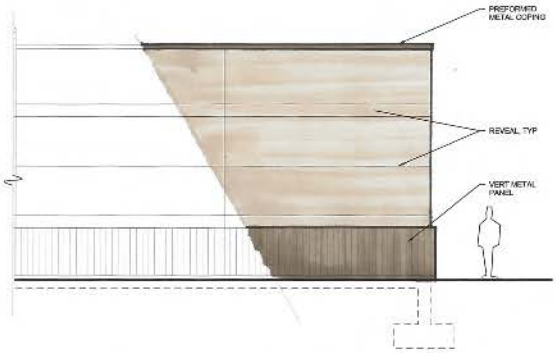

CHARACTER SKETCH STUDY D
1/8" = 1'-0"

CH2MHILL.

Appendix J
PDF II Section Studies A, B, and C

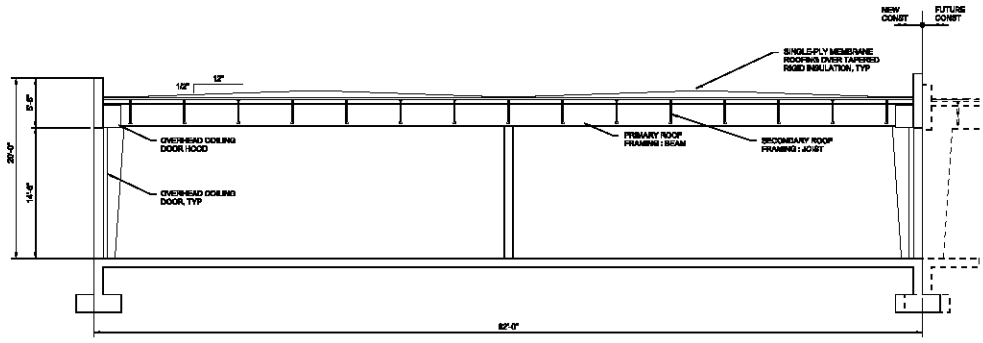

BUILDING SECTION STUDY A

3/32" = 1'-0"

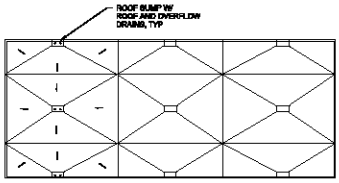

ROOF PLAN STUDY A

1/8" = 1'-0"

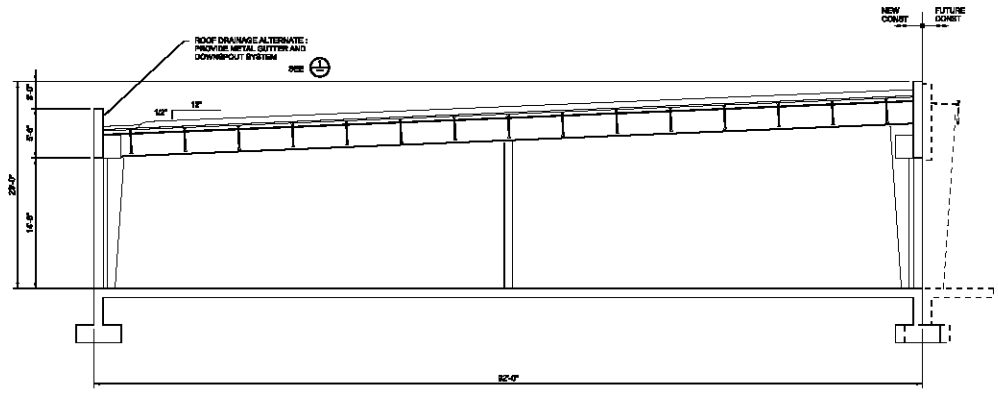

BUILDING SECTION STUDY B

3/32" = 1'-0"

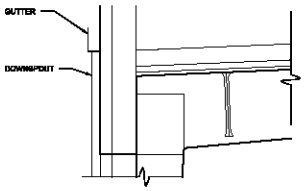

1 ALTERNATE EAVE DETAIL

3/4" = 1'-0"

CH2MHILL.

0.75″ margin

0.75 pt line, black

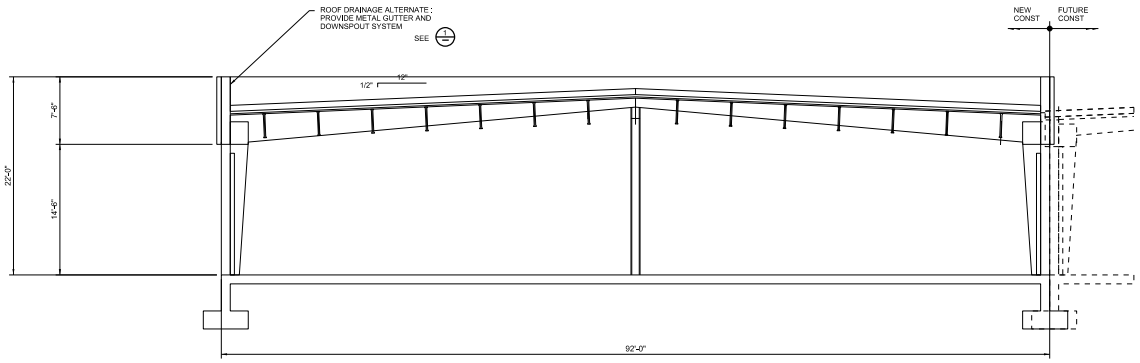

0.75″ margin

0.75″ margin

BUILDING SECTION STUDY C

3/32" = 1'-0"

3.5″ from edge of paper

From the Toolset:
Figure Number - Calibri, bold, 10/13
Figure Title - Calibri, bold, 10/13
Figure Caption - Calibri, light, italic, 10/13
Project Name - Calibri, light, 9/12

space = x space of logo (pg 9, brand guidelines)

Footer, or Slugline:
Calibri Light, 6pt.
Alwasy include JETT
number and FileName.

0.75 pt line, black

0.75″ margin

Appendix K
PDF II Colorized Elevation

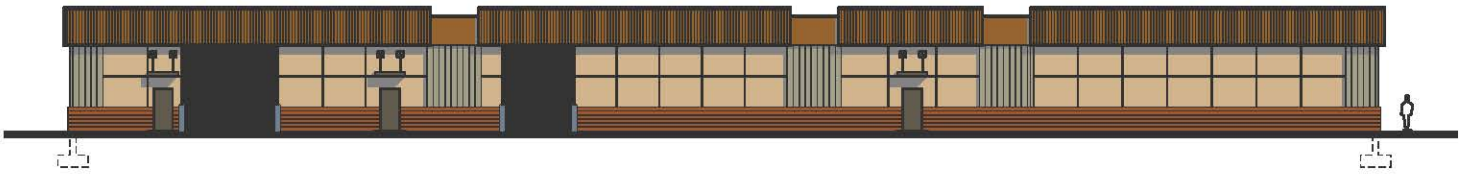

NORTH ELEVATION STUDY A

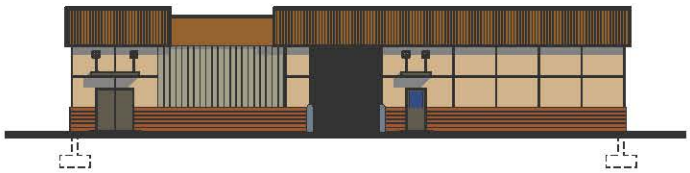

EAST ELEVATION STUDY A

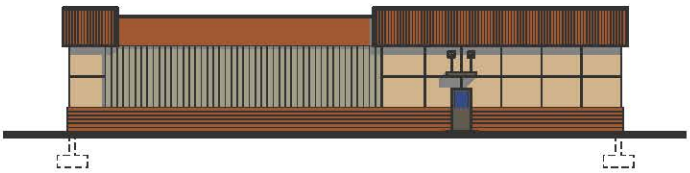

WEST ELEVATION STUDY A

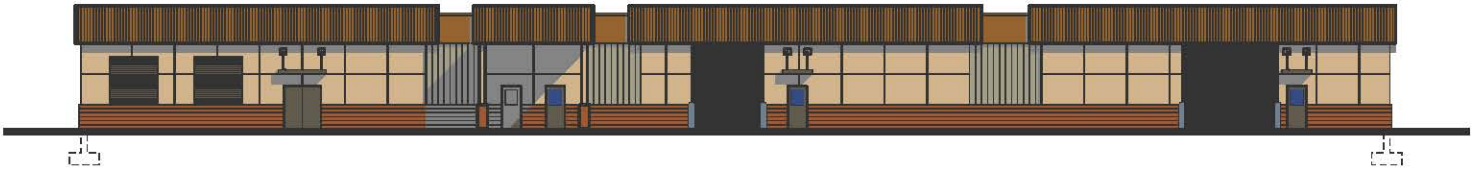

SOUTH ELEVATION STUDY A

CH2MHILL.

0.75" margin

0.75 pt line, black

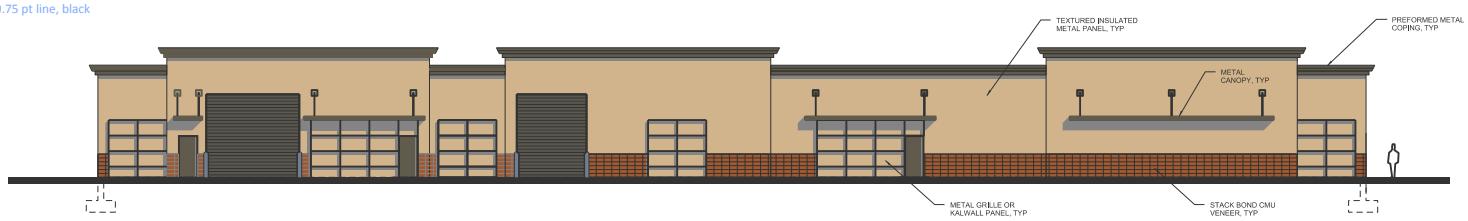

NORTH ELEVATION STUDY B
1/16" = 1'-0"

0.75" margin

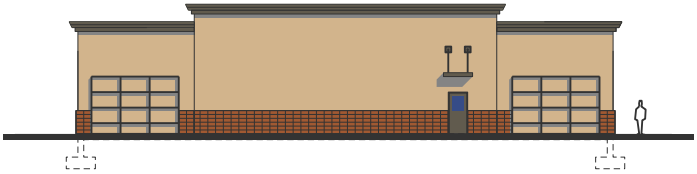

EAST ELEVATION STUDY B
1/16" = 1'-0"

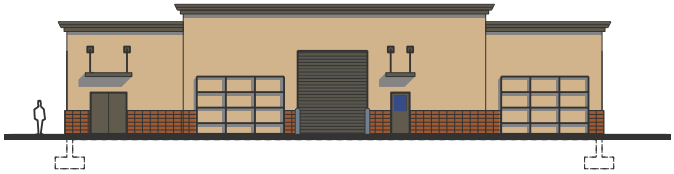

WEST ELEVATION STUDY B
1/16" = 1'-0"

0.75" margin

3.5" from edge of paper

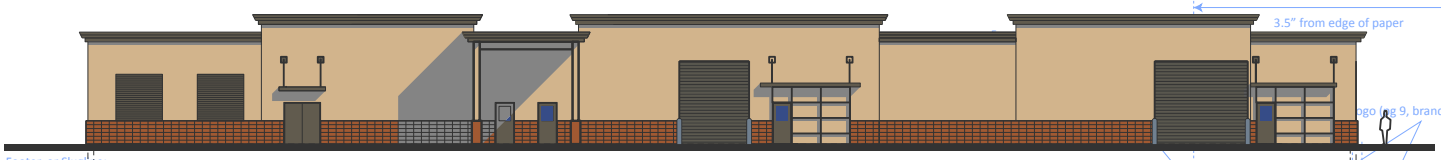

Footer, or Slugline:
Calibri Light, 6pt.
Alwasy include JETT number and FileName.

ogo (pg 9, brand guidelines)

SOUTH ELEVATION STUDY B
1/16" = 1'-0"

0.75 pt line, black

0.75" margin

Appendix L
PDF II Preliminary Opinion of Probable Construction Cost

Eastern Municipal Water District - Perris II Desalination Facility
Preliminary Design

Project name	EMWD Perris II DF
Estimator	Kevin Butcher/RDD
Labor rate table	4_Labor Union (2015)
Equipment rate table	1_EqRates_2015b_100%
Job size	1 LS
Duration	36 Mo
Project	EMWD Perris II DF
Project Number	65894
Business Group	WBG
Estimate Class 1-5	4
Design Stage	Preliminary
Project Manager	Fred Soroushian/SCO
Design Manager	Carmen Quan/SCO
Rev No. / Date	6/October 22, 2015
ENR CCI Index	Los Angeles @ 11628
ENR CCI Index Date	*October 2015*
Estimate Number	2015.9145515
Report format	Sorted by 'Facility/WorkActiv' 'Facility' summary
Cost index	California-Riverside

Facility	Description	Takeoff Quantity	Labor Cost/Unit	Material Cost/Unit	Equip Cost/Unit	Other Cost/Unit	Direct Cost Total/Unit	Direct Cost Total	Marked Up Total
01	Site Civil/Yard Piping	1.00 LS	475,675.58	700,334.67	164,083.00	295,500.00	1,635,593.25	1,635,593	2,973,047
02	Site Electric & Controls	1.00 LS	23,766.91	1,000.00	360.00	420,500.00	445,626.91	445,627	794,365
03	RO Process Building	1.00 LS	876,959.71	1,420,294.75	41,981.36	610,460.00	2,949,695.82	2,949,696	5,374,690
04	RO Process	1.00 LS	105,192.42	3,431,275.00	12,254.68		3,548,722.10	3,548,722	6,608,296
05	Chemical Storage/Process	1.00 LS	208,485.18	1,424,170.64	8,467.98		1,641,123.80	1,641,124	3,042,621
06	Electrical/Mechanical Room	1.00 LS	72,077.92	400,825.00	2,081.53		474,984.45	474,984	879,677
07	CIP Neutralization System	1.00 LS	28,051.02	151,716.61	2,192.32	17,500.00	199,459.95	199,460	368,033
08	Finished Water Pump Station	1.00 LS	222,265.96	944,500.89	12,189.48	54,700.00	1,233,656.33	1,233,656	2,276,781
09	Chlorine Contact Tank	1.00 LS	206,893.53	203,780.26	27,459.27		438,133.06	438,133	797,737
10	Brine Discharge Station	1.00 LS	11,772.18	28,180.43	659.85		40,612.46	40,612	74,712
11	RW Bypass Decarbonator (Menifee)	1.00 LS	32,432.07	161,433.20	5,042.66		198,907.93	198,908	367,850
12	Brine Pump Station (Menifee)	1.00 LS	140,706.39	715,672.50	14,791.30	2,500.00	873,670.19	873,670	1,616,266

BID ITEM Detail 2 (L,M,S,E,PE)

PROJECT:	**EMWD Perris II DF**	**ESTIMATOR:**	**Kevin Butcher/RDD**
DESIGN STAGE:	**Preliminary**	**ESTIMATE No.:**	**2015.9145515**
PROJECT No.:	**65894**	**REV No./DATE:**	**6/October 22, 2015**

Facility	WorkActiv	Description	Takeoff Quantity	Labor Cost/Unit	Material Cost/Unit	Equip Cost/Unit	Other Cost/Unit	Direct Cost Total/Unit	Direct Cost Total	Marked Up Total
01		**Site Civil/Yard Piping**								
	KLB-008	**Site Preparation and Completion**								
		SWPP & Temporary erosion control measures	1.00 ls	6,455.28	5,000.00	1,921.04	-	13,376.32	13,376	24,254
		Maintain erosion control during construction	1.00 ls	3,982.56	1,500.00		-	5,482.56	5,483	9,896
		Setup staging area	1.00 ls	1,291.06	1,500.00	384.21	-	3,175.27	3,175	5,783
		Surveying, structure & site layout, 3 person crew	5.00 day	1,598.09	25.00	76.52	-	1,699.61	8,498	15,157
		Potholing	1.00 ls	3,227.64	500.00	960.52	-	4,688.16	4,688	8,397
		Protection measures for existing items & equipment	1.00 ls	6,455.28	1,500.00	1,921.04	-	9,876.32	9,876	17,727
		Trench shoring as required	1.00 ls	6,455.28	5,000.00	1,921.04	-	13,376.32	13,376	24,254
		Site clearing	9.55 acre	382.48	-	560.54	-	943.02	9,006	16,052
		Load items to be removed from site. seperate & load vegetation	1,500.00 cy	1.61	-	0.48	-	2.09	3,141	5,599
		Haul removed items/vegetation offsite w/20CY end dump, assumed 20 mile round trip (includes tipping fee)	75.00 lds	69.30	100.00	243.14	-	412.44	30,933	55,753
		Remove erosion control, protection materials & general site cleanup	1.00 ls	8,533.12		4,216.96	-	12,750.08	12,750	22,726
		Watering for dust control during construction	1.00 ls	18,609.28	-	10,172.80	-	28,782.08	28,782	51,301
		Surface restoration upon completion	1.00 ls	6,455.28	1,500.00	1,921.04	-	9,876.32	9,876	17,727
		KLB-008 Site Preparation and Completion	**1.00 ls**	**80,725.74**	**24,125.00**	**48,110.33**		**152,961.07**	**152,961**	**274,627**
	KLB-009	**Site Grading**								
		General Site Grading w/Dozer	46,200.00 sy	0.37	-	0.70	-	1.07	49,305	87,881
		KLB-009 Site Grading	**1.00 ls**	**17,154.00**		**32,151.03**		**49,305.03**	**49,305**	**87,881**
	KLB-010	**Structure and Slabs Earthwork**								
		Excavating, trench or continuous footing, common earth, 1/2 C.Y. excavator, 1' to 4' deep, excludes sheeting or dewatering	521.00 cy	4.57	-	2.01	-	6.57	3,425	6,105
		Bedding, crushed stone 3/4" to 1/2"	115.00 cy	8.61	23.50	2.56	-	34.67	3,987	7,329
		Compaction of bedding with vibra-plate	115.00 cy	4.43	-	0.45	-	4.88	561	1,000
		Backfill w/backhoe crew along walls	174.00 cy	8.61	-	2.56	-	11.17	1,943	3,464
		Compaction w/wacker	174.00 cy	3.06	-	0.43	-	3.50	609	1,085
		Compaction, water for, 3000 gallon truck, 3 mile haul	289.00 cy	0.47		0.51	-	0.97	281	502
		Load excess material	347.00 cy	0.36	-	0.30	-	0.65	227	405
		Haul excess material offsite w/20CY end dump, assumed 20 mile round trip	347.00 cy	3.47	-	7.14	-	10.60	3,680	6,559
		KLB-010 Structure and Slabs Earthwork	**521.00 cy**	**14.14**	**5.19**	**8.91**		**28.24**	**14,713**	**26,446**
	KLB-016	**Chain Link Fencing and Gates**								
		Fence, chain link industrial, galvanized steel w/3-strands barb wire, 6 ga. wire, 2" posts @ 10' OC,, 6' high, includes excavation, & concrete	770.00 lf	5.01	21.00	1.27	-	27.28	21,003	38,769
		Fence, chain link industrial, galvanized steel w/3-strands barb wire, 6 ga. wire, 2-1/2" posts @ 10' OC, 8' high, includes excavation, in concrete	120.00 lf	7.01	32.50	1.77	-	41.29	4,954	9,152
		Chain link access gate, commercial, 6' x 24' dbl swing (purchase)	2.00 ea		950.00		-	950.00	1,900	3,543
		Gate hardware kit w/center stop & plunger bar, commercial (purchase)	2.00 ea		105.00		-	105.00	210	392
		Gate post w/cap, 2-1/2" dia, commercial (purchase)	4.00 ea		82.00		-	82.00	328	612

Facility	WorkActiv	Description	Takeoff Quantity	Labor Cost/Unit	Material Cost/Unit	Equip Cost/Unit	Other Cost/Unit	Direct Cost Total/Unit	Direct Cost Total	Marked Up Total
	KLB-016	**Chain Link Fencing and Gates**								
		Install gate post	4.00 ea	99.57	10.00	9.02	-	118.58	474	849
		Install gate, chain link, double swing, 6' x 24'	2.00 ea	403.46		120.07	-	523.52	1,047	1,866
		Connection to CMU wall	6.00 ea	149.35	75.00	17.89	-	242.24	1,453	2,628
		KLB-016 Chain Link Fencing and Gates	**1.00 ls**	**6,799.88**	**22,998.00**	**1,571.85**		**31,369.73**	**31,370**	**57,810**
	KLB-202	**Yard Piping**								
		Yard Piping Allowance	1.00 ls	-	-	-	250,000.00	250,000.00	250,000	445,598
		KLB-202 Yard Piping	**1.00 ls**				**250,000.00**	**250,000.00**	**250,000**	**445,598**
	KLB-210	**Wall Footing**								
		C.I.P. concrete forms, footing, continuous wall, plywood, 4 use, includes erecting, bracing, stripping and cleaning	3,305.00 sfca	3.90	2.22	-	-	6.12	20,217	36,641
		C.I.P. concrete forms, footing, for vertical wall rebar tie-ins hung from supports	1,650.00 lf	2.95	0.65	-	-	3.60	5,946	10,686
		Reinforcing Steel, in place, slab on grade, #3 to #7, A615, grade 60, incl labor for accessories, excl material for accessories	21.00 ton	962.89	1,000.00	-	-	1,962.89	41,221	75,204
		Reinforcing steel, unload and sort, add to base	21.00 ton	37.76	-	11.40	-	49.15	1,032	1,840
		Concrete, ready mix, regular weight, 4000 psi (incl % for testing & waste)	322.00 cy	-	107.00	-	-	107.00	34,454	64,253
		Structural concrete, placing, continuous footing, shallow, direct chute, includes strike off & consolidation, excludes material	306.00 cy	20.10	-	0.55	-	20.65	6,319	11,262
		Concrete finishing, floors, hand float top of footing	3,861.00 sf	0.44	-	-	-	0.44	1,707	3,042
		Concrete finishing, top of wall,	1,650.00 sf	0.54	-	-	-	0.54	893	1,592
		KLB-210 Wall Footing	**1,650.00 lf**	**28.80**	**38.71**	**0.25**		**67.75**	**111,788**	**204,519**
	KLB-212	**8' CMU Perimeter Wall**								
		Scaffolding, steel tubular, regular, rent/month only for complete system for face of walls, 6' -4" x 5' frames, excl. planks	132.00 csf	-	35.50	-	-	35.50	4,686	8,739
		Scaffolding, steel tubular, regular, accessory, plank, rent/mo, 2" x 10" x 16' long	138.00 ea	-	10.00	-	-	10.00	1,380	2,574
		Scaffolding, steel tubular, regular, labor only to setup & dismantle, bldg ext, 6' -4" x 5' frames, 2 stories, excl. planks	132.00 csf	186.49	-	-	-	186.49	24,616	43,876
		Scaffolding, planks, labor only to install & remove, 2"x10"x16', up to 50' high	138.00 ea	20.72	-	-	-	20.72	2,859	5,097
		Grout, concrete masonry unit (CMU) cores, 8" thick, 0.258 C.F./S.F., pumped, excludes blockwork	13,200.00 sf	2.61	1.14	0.21	-	3.96	52,265	94,398
		Masonry reinforcing bars, #3 and #4 reinforcing steel bars, placed horizontally, ASTM A615	9,450.00 lb	1.08	0.48	-	-	1.56	14,710	26,592
		Masonry reinforcing bars, #3 and #4 reinforcing steel bars, placed vertically, ASTM A615	11,880.00 lb	1.38	0.48	-	-	1.86	22,146	39,943
		Concrt block,decrtv,smooth face,2000 psi,8"8"16",inclds mortar & hrzntl joint rnfrcng every other course,excluds scffldn,grout and verticl rnfrcng	2,211.00 sf	6.53	3.44	-	-	9.97	22,037	39,907
		Concrete block, decorative, split face or scored split face, 2000 psi, 8" x 8" x 16", excludes scaffolding, grout and reinforcing	10,989.00 sf	7.51	4.47	-	-	11.98	131,607	238,627

Facility	WorkActiv	Description	Takeoff Quantity	Labor Cost/Unit	Material Cost/Unit	Equip Cost/Unit	Other Cost/Unit	Direct Cost Total/Unit	Direct Cost Total	Marked Up Total
	KLB-212	**8' CMU Perimeter Wall**								
		Concrete block, decorative, split face or scored split face, 8" thick, for special deeper colors, add	10,989.00 sf	-	0.73	-	-	0.73	8,022	14,960
		Concrete block, decorative, smooth face, 8" thick, for special deeper colors, add	2,211.00 sf	-	0.51	-	-	0.51	1,128	2,103
		Concrete block wall caps, stock units, 8" wall, 10" wide, 4" tapers to 3-1/2", includes mortar	1,650.00 lf	4.11	4.50	-	-	8.61	14,208	25,936
		Connection to existing CMU wall	1.00 ea	331.42	180.00	35.78	-	547.20	547	990
		KLB-212 8' CMU Perimeter Wall	**13,200.00 sf**	**14.59**	**7.94**	**0.21**		**22.74**	**300,210**	**543,741**
	KLB-214	**Facility Access Gates**								
		Concrete pad allowance, gate roller surface, operator & keypad (per gate)	3.00 ea	-	-	-	1,500.00	1,500.00	4,500	8,021
		Access gate control, telephone entry system w/kepad, card reader & emergency vehicle sensor, Linear AE 1000PLUS	3.00 ea	269.78	3,470.65	-	-	3,740.43	11,221	20,860
		Goose neck mount for key pad & lock box, heavy duty	3.00 ea	99.56	292.50	10.00	-	402.06	1,206	2,222
		Security lock box, Hoffman A1008CH	3.00 ea	24.89	108.50	-	-	133.39	400	740
		Parking gates, inductive loop	6.00 ea	269.78	171.00	-	-	440.78	2,645	4,799
		Slide gate operator. Linear model SLC-211	3.00 ea	337.23	1,611.99	-	-	1,949.22	5,848	10,822
		Fab'b steel access gate, rolling, pickets & perf screen, 24 x 8' (purchase)	3.00 ea		4,200.00		-	4,200.00	12,600	23,498
		Stee Post for 24' x 8' rolling gate (purchase)	12.00 ea		300.00		-	300.00	3,600	6,714
		Gate hardware kit w/v-track & rollers (purchase)	3.00 ea		500.00		-	500.00	1,500	2,797
		Miscellaneous plates & hardware for installation	1.00 ls	489.23	600.00	107.57	-	1,196.80	1,197	2,183
		Intall gate post	12.00 ea	99.56	15.00	9.02	-	123.58	1,483	2,658
		Install access gate, 24' x 8'	3.00 ea	860.70		256.14	-	1,116.84	3,351	5,972
		KLB-214 Facility Access Gates	**3.00 ea**	**2,693.07**	**11,985.64**	**338.07**	**1,500.00**	**16,516.78**	**49,550**	**91,285**
	KLB-218	**Gravel Surfacing**								
		Prepare and roll sub-base for gravel surfacing, larger areas	33,000.00 sy	0.33		0.35	-	0.68	22,308	39,762
		Purchase class 2 roadbase	11,138.00 tons		11.50		-	11.50	128,087	238,868
		Roadbase delivery from plant to project, assumed within 20 miles	11,138.00 tons		5.00		-	5.00	55,690	103,856
		Spread gravel onto open areas with loader	6,000.00 cy	0.66		1.09	-	1.75	10,489	18,695
		Grading gravel to finish grade, open areas	28,800.00 sy	0.29		0.24	-	0.52	15,047	26,820
		Placing & grading gravel, confined areas	4,200.00 sy	1.08		0.32	-	1.40	5,864	10,452
		Compaction, water for, 3000 gallon truck, 3 mile haul	6,875.00 cy	0.47		0.25	-	0.72	4,947	8,817
		Compaction, structural, 10 tons, steel wheel tandem roller	80.00 hr	89.26		30.55	-	119.81	9,585	17,084
		KLB-218 Gravel Surfacing	**297,000.00 sf**	**0.13**	**0.62**	**0.10**		**0.85**	**252,017**	**464,354**
	KLB-220	**Asphalt Paving**								
		Base course, prepare and roll sub-base, larger areas	9,400.00 sy	0.51		0.56	-	1.07	10,055	17,923
		Purchase class 2 roadbase	4,232.00 tons		11.50		-	11.50	48,668	90,761
		Roadbase delivery from plant to project, assumed within 20 miles	4,232.00 tons		5.00		-	5.00	21,160	39,461

Facility	WorkActiv	Description	Takeoff Quantity	Labor Cost/Unit	Material Cost/Unit	Equip Cost/Unit	Other Cost/Unit	Direct Cost Total/Unit	Direct Cost Total	Marked Up Total
	KLB-220	**Asphalt Paving**								
		Base course, 3/4" crushed aggregate base for roadways and parking areas, compacted to 8" (4" to 6" - lifts)	2,612.00 cy	4.76		6.33	-	11.09	28,969	51,634
		Purchase asphalt pavement, 6410 HMA, 1/2" aggregate	2,900.00 tons		54.00		-	54.00	156,600	292,042
		Asphalt pavement delivery from plant to point of use, assumed within 20 miles	2,900.00 tons		6.00			6.00	17,400	32,449
		Plant-mix asphalt paving, for roadways and large parking areas, binder course, 2" finished thickness	1,450.00 tons	10.80		6.41	-	17.21	24,955	44,479
		Plant-mix asphalt paving, for roadways and large parking areas, wearing course, 2" finished thickness	1,450.00 tons	13.17		7.67	-	20.84	30,211	53,849
		Painted pavement markings, allowance for striping & parking stalls	1.00 ls	1,209.10	350.00	325.67	-	1,884.77	1,885	3,388
		KLB-220 Asphalt Paving	**84,600.00 sf**	**0.63**	**2.89**	**0.50**		**4.02**	**339,903**	**625,985**
	KLB-222	**Landscaping**								
		Allowance for maintenance & warranty	1.00 ls	0.00	-	-	6,000.00	6,000.00	6,000	10,694
		Allowance for misc. landscape surfacing	1.00 ls				35,000.00	35,000.00	35,000	62,384
		Purchase Trees, Cercocarpus Ledifolious (Curly-Leaf Mountain Mahogany), 5-gallon size	70.00 ea	-	30.00	-	-	30.00	2,100	3,916
		Estimated Delivery Charge From Fulton Nursery to Menifee Project Site (approx 510 miles)	2.00 ea	-	1,650.00	-	-	1,650.00	3,300	6,154
		Purchase Trees, Ceanothus Ray Hartman (Mountain Lilac), 5-gallon size	70.00 ea	-	30.00	-	-	30.00	2,100	3,916
		Estimated Delivery Charge From Santa Margarita Nursery to Menifee Project Site (approx 300 miles)	2.00 ea	-	900.00	-	-	900.00	1,800	3,357
		Soil amendments, perlite, 4 CF bag	35.00 ea	-	18.00	-	-	18.00	630	1,175
		Soil amendments, kellogg grow mulch, 4 CF bag	35.00 ea	-	12.50	-	-	12.50	438	816
		Drip irrigation system, 140 trees, 1400 LF loop	1.00 ea	6,373.20	1,500.00	-	-	7,873.20	7,873	14,157
		Trenchwork for drip irrigation system	1,400.00 lf	0.92		0.13	-	1.05	1,468	2,616
		Planting beds preparation, excavate planting pit, sandy to mediium soil, by hand	42.00 cy	56.89	-	-	-	56.89	2,390	4,259
		Root barrier & PVC drain, 3" dia w/drain rock	140.00 ea	14.94	25.00	-	-	39.94	5,591	10,254
		Layout soil amendments & trees	1.00 ls	1,291.06	-	175.98	-	1,467.04	1,467	2,615
		Planting trees, 5 gallon size, includes backfilling w/soil amendment mix & constructing basin w/excess soil	140.00 ea	49.78		-	-	49.78	6,969	12,422
		Microbiobial ammendment packet AM130	140.00 ea	1.42	1.05	-	-	2.47	346	629
		Tree guying, guy wire and wrap, less than 3" caliper, includes 2 stakes	140.00 ea	22.76	14.25	-	-	37.01	5,181	9,399
		Mulching tree basins, bark mulch, 3" deep, skid steer loader	110.00 sy	5.87	3.55	0.80	-	10.22	1,124	2,036
		KLB-222 Landscaping	**1.00 ls**	**24,436.38**	**17,900.00**	**440.12**	**41,000.00**	**83,776.50**	**83,777**	**150,799**
		01 Site Civil/Yard Piping	**1.00 LS**	**475,675.58**	**700,334.67**	**164,083.00**	**295,500.00**	**1,635,593.25**	**1,635,593**	**2,973,047**
02		**Site Electric & Controls**								
	KLB-082	**Startup and Testing**								

Facility	WorkActiv	Description	Takeoff Quantity	Labor Cost/Unit	Material Cost/Unit	Equip Cost/Unit	Other Cost/Unit	Direct Cost Total/Unit	Direct Cost Total	Marked Up Total
	KLB-082	**Startup and Testing**								
		Process startup plan, functional test plan & documentation	1.00 ea		-		2,500.00	2,500.00	2,500	4,456
		Temporary materials & test equipment	1.00 ls		1,000.00	-		1,000.00	1,000	1,865
		Cleaning, Installation & removal of test equipment	1.00 ls	3,372.67		360.00		3,732.67	3,733	6,653
		Startup of unit process	10.00 day	1,019.71		-	800.00	1,819.71	18,197	32,434
		Functional & performance testing	10.00 day	1,019.71		-	1,000.00	2,019.71	20,197	35,999
		KLB-082 Startup and Testing	**1.00 ls**	**23,766.91**	**1,000.00**	**360.00**	**20,500.00**	**45,626.91**	**45,627**	**81,408**
	KLB-204	**Site Electric & Controls**								
		Site Electric & Controls Allowance	1.00 ls	-	-	-	400,000.00	400,000.00	400,000	712,957
		KLB-204 Site Electric & Controls	**1.00 ls**				**400,000.00**	**400,000.00**	**400,000**	**712,957**
		02 Site Electric & Controls	**1.00 LS**	**23,766.91**	**1,000.00**	**360.00**	**420,500.00**	**445,626.91**	**445,627**	**794,365**
03		**RO Process Building**								
	KLB-010	**Structure and Slabs Earthwork**								
		Structure excavation and grading for bedding placement	2,800.00 cy	4.74	-	4.48	-	9.22	25,813	46,008
		Stockpile excavated material	2,800.00 cy	0.48	-	0.40	-	0.87	2,441	4,351
		Bedding, crushed stone 3/4" to 1/2"	552.00 cy	8.61	23.50	2.56	-	34.67	19,137	35,180
		Compaction of bedding with vibra-plate	552.00 cy	4.43	-	0.45	-	4.88	2,692	4,798
		Return stockpiled material to be used as backfill	960.00 cy	0.48	-	0.40	-	0.87	837	1,492
		Backfill w/backhoe crew along structure/slab	960.00 cy	8.61	-	2.56	-	11.17	10,722	19,110
		Compaction w/wacker	960.00 cy	3.06	-	0.43	-	3.50	3,358	5,984
		Compaction, water for, 3000 gallon truck, 3 mile haul	1,512.00 cy	0.47		0.51	-	0.97	1,472	2,625
		Load excess material	1,840.00 cy	0.36	-	0.30	-	0.65	1,203	2,145
		Haul excess material offsite w/20CY end dump, assumed 20 mile round trip	1,840.00 cy	3.47	-	7.14	-	10.60	19,512	34,778
		KLB-010 Structure and Slabs Earthwork	**2,800.00 cy**	**14.71**	**4.63**	**11.80**		**31.14**	**87,186**	**156,470**
	KLB-014	**Site Appurtenances**								
		Metal parking bumpers, pipe bollards, conc filled/painted, 8' L x 4' D hole, 8" diam.	10.00 ea	88.26	435.00	24.01	-	547.27	5,473	10,113
		KLB-014 Site Appurtenances	**1.00 ls**	**882.56**	**4,350.00**	**240.13**		**5,472.69**	**5,473**	**10,113**
	KLB-020	**Building Stemwall w/Footing**								
		C.I.P. concrete forms, footing, continuous wall, plywood, 2 use, includes erecting, bracing, stripping and cleaning	3,696.00 sfca	4.30	3.74	-	-	8.04	29,701	54,079
		Reinforcing Steel, in place, slab on grade, #3 to #7, A615, grade 60, incl labor for accessories, excl material for accessories	17.00 ton	962.89	1,000.00	-	-	1,962.89	33,369	60,880
		Reinforcing steel, unload and sort, add to base	17.00 ton	37.76	-	11.40	-	49.15	836	1,489
		Concrete, ready mix, regular weight, 4000 psi (incl % for testing & waste)	313.00 cy	-	107.00	-	-	107.00	33,491	62,457
		Structural concrete, placing, continuous footing, shallow, direct chute, includes strike off & consolidation, excludes material	229.00 cy	20.10	-	0.55	-	20.65	4,729	8,428
		Structural concrete, placing, walls, direct chute, 12" thick, includes strike off & consolidation, excludes material	69.00 cy	24.12	-	0.66	-	24.78	1,710	3,047

Facility	WorkActiv	Description	Takeoff Quantity	Labor Cost/Unit	Material Cost/Unit	Equip Cost/Unit	Other Cost/Unit	Direct Cost Total/Unit	Direct Cost Total	Marked Up Total
	KLB-020	**Building Stemwall w/Footing**								
		Concrete finishing, floors, hand float top of footing	3,080.00 sf	0.44	-	-	-	0.44	1,362	2,427
		KLB-020 Building Stemwall w/Footing	**298.00 cy**	**135.96**	**215.82**	**1.23**		**353.01**	**105,197**	**192,807**
	KLB-021	**Pipe Gallery/Sump Slabs**								
		C.I.P. concrete forms, slab on grade, edge, wood, 6" to 12" high, 1 use, includes erecting, bracing, stripping and cleaning	884.00 sfca	8.79	2.44	-	-	11.23	9,929	17,875
		Slab screed setup	5,026.00 sf	0.50	0.16	-	-	0.66	3,304	5,955
		Waterstop, PVC, ribbed, with center bulb, 3/8" thick x 6" wide	884.00 lf	3.83	3.67	-	-	7.50	6,626	12,078
		Waterstop, rubber, field union, 3/8" x 6" wide, walls	38.00 ea	9.95	35.50	-	-	45.45	1,727	3,189
		Reinforcing Steel, in place, slab on grade, #3 to #7, A615, grade 60, incl labor for accessories, excl material for accessories	13.95 ton	962.89	1,000.00	-	-	1,962.89	27,382	49,957
		Reinforcing steel, unload and sort, add to base	13.95 ton	37.76	-	11.40	-	49.15	686	1,222
		Concrete, ready mix, regular weight, 4000 psi (incl % for testing & waste)	195.00 cy	-	107.00	-	-	107.00	20,865	38,911
		Structural concrete, placing, slab on grade, pumped, over 6" thick, includes strike off & consolidation, excludes material	186.00 cy	18.28	-	4.31	-	22.58	4,201	7,487
		Concrete finishing, floors, manual screed	5,026.00 sf	0.27	-	-	-	0.27	1,371	2,444
		Concrete finishng,floors,basic finishng for unspecfd flatwork,bull float,manual float&manual steel trowel,excludes placing,striking off&consolidating	5,026.00 sf	1.04	-	-	-	1.04	5,203	9,274
		Concrete surface treatment, curing, sprayed membrane compound	50.26 csf	8.38	11.05	-	-	19.43	977	1,787
		KLB-021 Pipe Gallery/Sump Slabs	**186.00 cy**	**206.37**	**230.78**	**5.16**		**442.31**	**82,270**	**150,179**
	KLB-022	**Pipe Gallery/Sump Walls**								
		C.I.P. concrete forms, wall, job built, plywood, to 8' high, 2 use, includes erecting, bracing, stripping and cleaning	7,128.00 sfca	6.68	1.75	-	-	8.43	60,089	108,131
		Waterstop, PVC, ribbed, with center bulb, 3/8" thick x 6" wide	158.00 lf	3.83	3.67	-	-	7.50	1,184	2,159
		Reinforcing Steel, in place, walls, #3 to #7, A615, grade 60, incl labor for accessories, excl material for accessories	11.55 ton	738.22	1,000.00	-	-	1,738.22	20,076	36,737
		Reinforcing steel, unload and sort, add to base	11.55 ton	37.76	-	11.40	-	49.15	568	1,012
		Concrete, ready mix, regular weight, 4000 psi (incl % for testing & waste)	139.00 cy	-	107.00	-	-	107.00	14,873	27,737
		Structural concrete, placing, walls, pumped, 12" thick, includes strike off & consolidation, excludes material	132.00 cy	30.74	-	7.24	-	37.98	5,014	8,936
		Concrete finishing, walls, includes breaking ties and patching voids	3,628.00 sf	0.84	0.04	-	-	0.88	3,206	5,727
		Concrete finishing, walls, burlap rub with grout, includes breaking ties and patching voids	3,500.00 sf	1.01	0.04	-	-	1.05	3,685	6,580
		Concrete surface treatment, curing, sprayed membrane compound	71.28 csf	8.38	8.05	-	-	16.43	1,171	2,135
		KLB-022 Pipe Gallery/Sump Walls	**132.00 cy**	**518.51**	**305.57**	**8.24**		**832.32**	**109,867**	**199,153**
	KLB-024	**Structure Main Slab**								
		C.I.P. concrete forms, slab on grade, edge, wood, 6" to 12" high, 1 use, includes erecting, bracing, stripping and cleaning	805.00 sfca	8.79	2.44	-	-	11.23	9,041	16,277

Facility	WorkActiv	Description	Takeoff Quantity	Labor Cost/Unit	Material Cost/Unit	Equip Cost/Unit	Other Cost/Unit	Direct Cost Total/Unit	Direct Cost Total	Marked Up Total
	KLB-024	**Structure Main Slab**								
		C.I.P. concrete forms, slab on grade, slab blockouts, wood, to 12" high, 1 use, includes erecting, bracing, stripping and cleaning	800.00 lf	9.45	0.80	-	-	10.25	8,201	14,669
		Slab screed setup (deduction made for pipe gallery/sump areas)	18,343.00 sf	0.50	0.16	-	-	0.66	12,057	21,732
		Expansion joint, premolded, bituminous fiber, 1" x 12"	93.00 lf	1.66	1.99	-	-	3.65	339	620
		Reinforcing Steel, in place, slab on grade, #3 to #7, A615, grade 60, incl labor for accessories, excl material for accessories	51.00 ton	962.89	1,000.00	-	-	1,962.89	100,108	182,638
		Reinforcing steel, unload and sort, add to base	51.00 ton	37.76	-	11.40	-	49.15	2,507	4,468
		Concrete, ready mix, regular weight, 4000 psi (incl % for testing & waste)	714.00 cy	-	107.00	-	-	107.00	76,398	142,474
		Structural concrete, placing, slab on grade, direct chute, over 6" thick, includes strike off & consolidation, excludes material	680.00 cy	14.96	-	0.40	-	15.36	10,447	18,621
		Concrete finishing, floors, manual screed	18,343.00 sf	0.27	-	-	-	0.27	5,005	8,921
		Concrete finishng,floors,basic finishng for unspecfd flatwork,bull float,manual float&manual steel trowel,excludes placing,striking off&consolidating	18,343.00 sf	1.04	-	-	-	1.04	18,990	33,848
		Finishing curb face, rub, float, & hand trowel	800.00 sf	0.86	-	-	-	0.86	684	1,219
		Concrete surface treatment, curing, sprayed membrane compound	191.43 csf	8.38	11.05	-	-	19.43	3,720	6,806
		KLB-024 Structure Main Slab	**680.00 cy**	**163.83**	**198.88**	**1.26**		**363.97**	**247,496**	**452,293**
	KLB-032	**Miscellaneous Concrete**								
		Concrete allowance for equipment pads, door stoops, etc (based on building slabs sf)	22,480.00 sf	-	-	-	2.75	2.75	61,820	110,188
		KLB-032 Miscellaneous Concrete	**1.00 ls**				**61,820.00**	**61,820.00**	**61,820**	**110,188**
	KLB-040	**Miscellaneous Metals**								
		Aluminum, structural shapes, 1" to 10" members, under 1 ton	1,085.00 lb	1.04	3.85	0.39	-	5.28	5,731	10,560
		Partition, galv LB studs, 18 ga x 6" W studs 16" O.C. x 10' H, incl galv top & bottom track, excl openings, headers, beams, bracing & bridging	125.00 lf	13.63	12.70	-	-	26.33	3,291	5,996
		Ladder, shop fabricated, aluminum, 20" W, bolted to concrete, incl cage	25.00 vlf	50.75	120.00	2.87	-	173.62	4,341	7,984
		Ladder, shop fabricated, aluminum, 20" W, bolted to concrete, excl cage	69.00 vlf	29.85	51.00	1.69	-	82.54	5,695	10,442
		Grating frame, aluminum, 1" to 1-1/2" D, field fabricated	448.00 lf	8.98	3.78	-	-	12.76	5,716	10,327
		Floor grating, aluminum, 1-1/2" x 3/16" bearing bars @ 1-3/16" O.C., cross bars @ 4" O.C., over 300 S.F., field fabricated from panels	1,993.00 sf	2.54	29.00	0.14	-	31.68	63,140	117,309
		Misc support framing	1.00 ls	1,280.74	1,500.00	143.42	-	2,924.16	2,924	5,336
		KLB-040 Miscellaneous Metals	**1.00 ls**	**16,518.36**	**73,274.19**	**1,045.37**		**90,837.92**	**90,838**	**167,954**
	KLB-041	**Pre-Engineered Metal Building Systems**								
		Purchase Pre-Engineered Metal Building, Varco-Pruden, 218' x 92' x 23' high w/Kingspan Granitstone insulated ext wall system (20056 sf of floor)	1.00 ea	-	400,000.00	-	-	400,000.00	400,000	745,957
		Install pre-engineered metal building, Varco-Pruden, 218' x 92' x 23' high (20056 sf of floor)	1.00 ea	-	-	-	214,000.00	214,000.00	214,000	381,432
		KLB-041 Pre-Engineered Metal Building Systems	**20,056.00 sf**		**19.94**		**10.67**	**30.61**	**614,000**	**1,127,389**
	KLB-042	**Building Doors & Openings**								

Facility	WorkActiv	Description	Takeoff Quantity	Labor Cost/Unit	Material Cost/Unit	Equip Cost/Unit	Other Cost/Unit	Direct Cost Total/Unit	Direct Cost Total	Marked Up Total
	KLB-042	**Building Doors & Openings**								
		Roof Hatches, with curb, 1" fiberglass insulation, aluminum curb & cover, 2'-6" x 3'-0"	3.00 ea	192.72	1,025.00	-	-	1,217.72	3,653	6,765
		Frames, steel, knock down, hollow metal, single, 16 ga., up to 5-3/4" deep, 7'-0" h x 3'-0" w	19.00 ea	62.16	151.00	-	-	213.16	4,050	7,456
		Frames, steel, knock down, hollow metal, double, 16 ga., up to 5-3/4" deep, 7'-0" h x 6'-0" w	2.00 ea	71.04	194.00	-	-	265.04	530	977
		Steel frames, add for baked enamel finish	3.00 ea	7.82	22.50	-	-	30.32	91	168
		Doors, commercial, steel, insulated, full panel, 18 ga., 3'-0" x 7'-0" x 1-3/4" thick	2.00 ea	66.31	490.00	-	-	556.31	1,113	2,064
		Doors, commercial, steel, insulated, half glass, 18 ga., 3'-0" x 7'-0" x 1-3/4" thick	19.00 ea	62.16	685.00	-	-	747.16	14,196	26,377
		Add for baked enamel finish, average cost per leaf	21.00 leaf	8.77	50.40	-	-	59.17	1,242	2,302
		Metal doors, receive, sort and spread, per manhour	4.00 mh	49.78	-	-	-	49.78	199	355
		Doors, rolling service, steel, manual, 20 gauge, 12' x 12' high, incl. hardware	3.00 ea	1,047.39	1,950.00	-	-	2,997.39	8,992	16,510
		Doors, rolling service, steel, manual, 20 gauge, 14' x 14' high, incl. hardware	2.00 ea	1,571.08	3,100.00	-	-	4,671.08	9,342	17,163
		Doors, rolling service, steel, manual, for 18 gauge doors, add	824.00 sf	-	1.65	-	-	1.65	1,360	2,536
		Doors, rolling service, steel, manual, for enamel finish, add	824.00 sf	-	1.90	-	-	1.90	1,566	2,920
		Doors, rolling service, steel, manual, for weatherstripping, extruded rubber, jambs, add	100.00 lf	-	14.40	-	-	14.40	1,440	2,685
		Doors, rolling service, steel, manual, for weatherstripping, hood, extruded rubber, add	64.00 lf	-	8.20	-	-	8.20	525	979
		Doors, rolling service, steel, manual, for weatherstripping, sill, extruded rubber, add	64.00 lf	-	5.15	-	-	5.15	330	615
		Doors, rolling service, steel, manual, motor operators for, to 14' x 14' opening	5.00 ea	251.37	1,150.00	-	-	1,401.37	7,007	12,963
		Aluminum punched window, 1" insulating glass, fixed, standard colors	208.00 sf	6.28	30.00	-	-	36.28	7,547	13,967
		Alum punched window, 1" insulating glass, 100% vented, stndrd colors	240.00 sf	6.28	42.50	-	-	48.78	11,708	21,710
		Skylights, sandwich panels, fiberglass, for roofs, 2-3/4" thick, 250 SF and up	600.00 sf	5.84	20.50	-	-	26.34	15,804	29,184
		Average, door hardware, interior keyed, single	10.00 set	31.08	140.00	-	-	171.08	1,711	3,165
		Average, door hardware, exterior keyed, single, w/ panic	9.00 set	62.16	420.00	-	-	482.16	4,339	8,046
		Average, door hardware, exterior keyed, pair, w/ panic	2.00 set	93.25	845.00	-	-	938.25	1,876	3,484
		Thresholds, aluminum, 8" wide x 1/2" thick	39.00 lf	8.29	16.50	-	-	24.79	967	1,776
		Louver, aluminum, extruded, with screen, mill finish, dual combination, automatic, intake or exhaust	160.00 sf	28.27	56.00	-	-	84.27	13,483	24,770
		Louver, aluminum, extruded, with screen, mill finish, dual combination, motor for electric or pneumatic operation, intake or exhaust	2.00 ea	40.38	480.00	-	-	520.38	1,041	1,934
		Louver, aluminum, extruded, with screen, mill finish, fixed blade, continuous line, stormproof	112.00 sf	20.19	41.50	-	-	61.69	6,909	12,698

Facility	WorkActiv	Description	Takeoff Quantity	Labor Cost/Unit	Material Cost/Unit	Equip Cost/Unit	Other Cost/Unit	Direct Cost Total/Unit	Direct Cost Total	Marked Up Total
	KLB-042	**Building Doors & Openings**								
		Louver, finishes, applied by manufacturer at additional cost, available in colors, baked enamel finish coating, add	272.00 sf	-	6.10	-	-	6.10	1,659	3,094
		KLB-042 Building Doors & Openings	**74.00 ea**	**347.66**	**1,310.18**			**1,657.84**	**122,680**	**226,662**
	KLB-043	**Building Roofing System**								
		Roof Deck Insulation, install polystyrene insulation, 4" thick, R20, 15 PSI compressive strength	20,056.00 sf	0.32	1.86	-	-	2.18	43,671	80,917
		Vapor Retarders, building paper, roof deck vapor barrier, class 1 metal decks	200.56 sq	11.16	21.50	-	-	32.66	6,551	12,032
		Walkway pads for roof, 2' x 2' EPDM	150.00 ea	2.49	10.15	-	-	12.64	1,896	3,505
		Sngl-ply memb,plys (pb),0.57 psf, full adhrd with cntct cemnt,100 mils	200.56 sq	77.32	250.00	7.74	-	335.06	67,199	123,911
		Final sealing for seams, corners & roof penetrations	20,056.00 sf	0.52	0.10	0.05	-	0.67	13,362	23,981
		KLB-043 Building Roofing System	**20,056.00 sf**	**1.74**	**4.75**	**0.13**		**6.62**	**132,678**	**244,346**
	KLB-045	**Roof Drain System**								
		Aluminum downspouts, enameled, 5" x 6", .024" thick	368.00 lf	5.48	5.78	-	-	11.26	4,142	7,559
		Elbows, aluminum, enameled, .025" thick, 5" x 6"	16.00 ea	7.07	7.50	-	-	14.57	233	425
		Pre-cast concrete spash block	16.00 ea	4.15	11.15	-	-	15.30	245	451
		Roof drain assembly, 2' x 4' sump, side outlet thru-wall acupper w/down drain connection	16.00 ea	213.65	535.00	-	-	748.65	11,978	22,056
		KLB-045 Roof Drain System	**20,056.00 sf**	**0.28**	**0.55**			**0.83**	**16,599**	**30,491**
	KLB-046	**CMU Veneer Wainscotting**								
		Masonry anchors, veneer wall ties, corrugated, galvanized, 16 ga., 7/8" x 7"	11.50 c	46.13	28.00	-	-	74.13	853	1,546
		Cncrt block,dcrtv,slump block,2000 psi,4"thk,4"hgh x 16",incld mortr and hrzntl joint rnfrcn every other course,exclds scffld,grout and vertcl rnfrcng	2,828.00 sf	5.36	3.89	-	-	9.25	26,148	47,514
		KLB-046 CMU Veneer Wainscotting	**2,828.00 sf**	**5.54**	**4.00**			**9.55**	**27,001**	**49,060**
	KLB-047	**Building Specialties & Furnishings**								
		Facility signs, markings & labels	1.00 ls	994.59	3,500.00	-	-	4,494.59	4,495	8,300
		Bathroom acessories & specilaties	1.00 ls	994.59	2,000.00	-	-	2,994.59	2,995	5,503
		Fire extinguishers, CO2, portable, with hose & "H" horn, 10 lb	4.00 ea	-	275.00	-	-	275.00	1,100	2,051
		Fire extinguishers, dry chemical, pressurized, standard type, portable, painted, 10 lb	14.00 ea	-	81.00	-	-	81.00	1,134	2,115
		Fire extinguishers, installation of extinguishers, on masonry or concrete	18.00 ea	37.30	10.00	-	-	47.30	851	1,532
		Furnishings allowance	1.00 ls	372.97	4,000.00	-	-	4,372.97	4,373	8,124
		KLB-047 Building Specialties & Furnishings	**1.00 ls**	**3,033.50**	**11,914.00**			**14,947.50**	**14,948**	**27,625**
	KLB-048	**Building Finishes**								
		Suspended Ceiling System, 1-1/2" carriers, 24" O.C. with 7/8" channels, 16" O.C., incl. carriers	400.00 sf	1.42	0.54	-	-	1.96	785	1,418
		Ceiling/soffit framing to 6" 18 ga. stud, 24" oc., flat	724.00 sf	2.30	1.34	-	-	3.64	2,635	4,776
		Gypsum wallboard, on walls, standard, w/compound skim coat (level 5 finish), 5/8" thick	1,240.00 sf	0.74	0.43	-	-	1.17	1,453	2,634

Facility	WorkActiv	Description	Takeoff Quantity	Labor Cost/Unit	Material Cost/Unit	Equip Cost/Unit	Other Cost/Unit	Direct Cost Total/Unit	Direct Cost Total	Marked Up Total
	KLB-048	**Building Finishes**								
		Gypsum wallboard, on walls, water resistant, w/compound skim coat (level 5 finish), 5/8" thick	182.00 sf	0.74	0.52	-	-	1.26	230	417
		Gypsum wallboard, on ceilings, standard, w/compound skim coat (level 5 finish), 5/8" thick	524.00 sf	0.94	0.43	-	-	1.37	715	1,293
		Gypsum wallboard, on ceilings, water resistant, w/compound skim coat (level 5 finish), 5/8" thick	200.00 sf	0.94	0.52	-	-	1.46	291	527
		Ceramic tile, floors, glazed, thin set, color group 1, 6" x 6"	200.00 sf	2.43	4.45	-	-	6.88	1,376	2,525
		Ceramic tile, for abrasive non-slip tile, add	200.00 sf	-	0.44	-	-	0.44	88	164
		Ceramic tile, walls, interior, thin set, 6" x 6"	182.00 sf	4.16	3.28	-	-	7.44	1,355	2,464
		Complete suspended ceilings, with z bar suspension, 5/8" mineral fiber tile, incl. standard susp. system, excl. 1-1/2" carrier channels	400.00 sf	1.92	2.32	-	-	4.24	1,694	3,097
		Cove base, rubber or vinyl, standard colors, 6" h, 0.080" thick	214.00 lf	1.29	1.55	-	-	2.84	608	1,111
		Cove base, rubber or vinyl, standard colors, corners, 6" h	16.00 ea	1.29	3.15	-	-	4.44	71	131
		Resilient Flooring, vinyl tile, max, 12" x 12"x 1/8"	524.00 sf	0.81	6.20	-	-	7.01	3,675	6,818
		Carpet, commercial grades, direct cement, nylon, plush, 60 oz., heavy traffic	42.00 sy	5.81	62.50	-	-	68.31	2,869	5,330
		Misc paintings and coatings as required. includes surface prep for wall and ceiling paintings below	1.00 ls	10,426.40	2,500.00	600.00	-	13,526.40	13,526	24,316
		Paints & Coatings, floors, interior, acrylic sealer, one coat	11,200.00 sf	0.06	0.23	-	-	0.29	3,224	5,958
		Paints & coatings, walls & ceilings, interior, concrete, drywall or plaster, latex paint, primer or sealer coat, smooth finish, spray	1,964.00 sf	0.06	0.05	-	-	0.11	205	374
		Paints & coatings, walls & ceilings, interior, concrete, drywall or plaster, latex paint, 2 coats, smooth finish, spray	1,964.00 sf	0.09	0.12	-	-	0.21	417	763
		Paints & coatings, walls & ceilings, interior, masonry or concrete block, latex paint, primer, smooth finish, spray	13,680.00 sf	0.06	0.10	-	-	0.16	2,223	4,075
		Paints & coatings, walls & ceilings, interior, masonry or concrete block, latex paint, 2 coats, smooth finish, spray	13,680.00 sf	0.13	0.17	-	-	0.30	4,038	7,390
		Chemical Resistant Coatings - System 19 (modified), includes prep work	6,500.00 sf			-	5.20	5.20	33,800	60,245
		KLB-048 Building Finishes	**1.00 ls**	**20,872.89**	**20,005.66**	**600.00**	**33,800.00**	**75,278.55**	**75,279**	**135,826**
	KLB-049	**Building Insulation**								
		Blanket insulation, for walls or ceilings, kraft faced fiberglass, 6" thick, R19, 15" wide	1,250.00 sf	0.37	0.42	-	-	0.79	986	1,800
		Sprayed fireproofing, magnesium oxychloride, 60 lb to 70 lb density, 1/2" thick	1,800.00 sf	0.62	4.15	0.07	-	4.84	8,703	16,129
		KLB-049 Building Insulation	**3,050.00 sf**	**0.51**	**2.62**	**0.04**		**3.18**	**9,689**	**17,929**
	KLB-070	**Facility Mechanical**								
		Mechanical allowance for facility drain, wash-down & service piping	20,056.00 sf	1.14	3.00	0.06	-	4.20	84,140	154,935
		Water heater, commercial, electric, 40 gallon, 6000 watt, 240v, 28gph rate of rise. Rheem-Ruud ELD40	3.00 ea	427.29	1,200.00	-	-	1,627.29	4,882	8,998

Facility	WorkActiv	Description	Takeoff Quantity	Labor Cost/Unit	Material Cost/Unit	Equip Cost/Unit	Other Cost/Unit	Direct Cost Total/Unit	Direct Cost Total	Marked Up Total
	KLB-070	**Facility Mechanical**								
		Toilet seat, solid plastic, white, residential, open front, elongated bowl, includes cover	2.00 ea	24.36	48.50	-	-	72.86	146	268
		Water closet, bowl only, wall hung, includes flush valve and seat	2.00 ea	196.46	945.00	-	-	1,141.46	2,283	4,225
		Sink, service, mop, molded stone, 24" x 36", includes faucet and drain	1.00 ea	175.57	273.00	-	-	448.57	449	822
		Sink, service, wall, porcelain enamel on cast iron, roll rim, 22" x 18", includes faucet and drain	1.00 ea	284.86	770.00	-	-	1,054.86	1,055	1,944
		Sink, service, wall, vitreous china, 22" x 20", includes faucet and drain	2.00 ea	284.86	610.00	-	-	894.86	1,790	3,291
		SSH-1 Safety drench shower/eye wash combination, freestanding, Haws 8320CRP AXION MSR	4.00 ea	284.86	1,031.82	-	-	1,316.68	5,267	9,728
		Anti-scald valve, Haws SP157B	4.00 ea	36.54	544.62	-	-	581.16	2,325	4,323
		Emergency alarm and light system for showers, Haws 9001	4.00 ea	213.65	1,586.36	-	-	1,800.01	7,200	13,357
		Drinking fountain, wall mounted, non-recessed, aluminum, dual bubbler type, for connection to cold water supply	1.00 ea	182.71	2,450.00	-	-	2,632.71	2,633	4,895
		Drinking fountain, wall mounted, non-recessed, aluminum, dual bubbler type, for connection to cold water supply	1.00 ea	182.71	2,450.00	-	-	2,632.71	2,633	4,895
		KLB-070 Facility Mechanical	**1.00 ls**	**28,111.86**	**85,569.20**	**1,119.77**		**114,800.83**	**114,801**	**211,680**
	KLB-072	**Facility HVAC**								
		HVAC Allowance for Room Area	20,056.00 sf	-	-	-	15.00	15.00	300,840	536,215
		KLB-072 Facility HVAC	**20,056.00 sf**				**15.00**	**15.00**	**300,840**	**536,215**
	KLB-080	**Facility Electrical**								
		LED Lighting allowance	20,056.00 sf	4.29	6.30	-	-	10.59	212,357	388,928
		Electrical allowance for conduit, wire, boxes, & devices	20,056.00 sf	16.86	9.00	-	-	25.86	518,678	939,380
		KLB-080 Facility Electrical	**1.00 ls**	**424,178.71**	**306,856.80**			**731,035.51**	**731,036**	**1,328,308**
		03 RO Process Building	**1.00 LS**	**876,959.71**	**1,420,294.75**	**41,981.36**	**610,460.00**	**2,949,695.82**	**2,949,696**	**5,374,690**
04		**RO Process**								
	KLB-060	**RO System Equipment**								
		Purchase RO Feed Cartridge Filters, 2205 duplex sst, horizontal, 2330 gpm high flow, 5 micron (duty filter)	2.00 ea	-	54,625.00	-	-	54,625.00	109,250	203,739
		Purchase RO Feed Cartridge Filters, 2205 duplex sst, horizontal, 2330 gpm high flow, 5 micron (standy filter)	1.00 ea	-	54,625.00	-	-	54,625.00	54,625	101,870
		Purchase RO Train, 72% recovery, 2-stage, 36 FRP vessels w/hydraulic turbo charger booster	2.00 ea	-	1,100,000.00	-	-	1,100,000.00	2,200,000	4,102,763
		Purchase RO CIP Tank w/heater, FRP, 4000 gal, 10' da x 10' high	1.00 ea	-	44,000.00	-	-	44,000.00	44,000	82,055
		Purchase RO CIP Cartridge Filters, 316 sst, horizontal, 1200 gpm, 5 micron	1.00 ea	-	42,000.00	-	-	42,000.00	42,000	78,325
		Purchase RO Flush Tank, FRP, 12000 gal, 12' da x 16' high	1.00 ea	-	56,000.00	-	-	56,000.00	56,000	104,434
		Purchase RO Decarbonator w/14000 scfm blower (15 hp), 3125 gpm, FRP tower, 12' da x 25' high	1.00 ea	-	182,000.00	-	-	182,000.00	182,000	339,410
		Unload & set equipment	1.00 ls	14,899.44	1,000.00	3,007.20	-	18,906.64	18,907	33,782

Facility	WorkActiv	Description	Takeoff Quantity	Labor Cost/Unit	Material Cost/Unit	Equip Cost/Unit	Other Cost/Unit	Direct Cost Total/Unit	Direct Cost Total	Marked Up Total
	KLB-060	**RO System Equipment**								
		Final connections & adjustments	1.00 ls	22,788.80	6,000.00	1,116.64	-	29,905.44	29,905	53,798
		KLB-060 RO System Equipment	**1.00 ls**	**37,688.24**	**2,694,875.00**	**4,123.84**		**2,736,687.08**	**2,736,687**	**5,100,177**
	KLB-066	**Process Pumps**								
		Purchase RO Flush Pump, horiz end-suction, 316 sst, 400 gpm, 30 hp variable speed motor	1.00 ea	-	68,500.00	-	-	68,500.00	68,500	127,745
		Purchase CIP Pump, horiz end-suction, 316 sst, 1200 gpm, 75 hp variable speed motor	1.00 ea	-	67,000.00	-	-	67,000.00	67,000	124,948
		Purchase RO Feed Pump, vertical turbine, 2205 duplex sst, 1450 gpm, 200 hp variable speed	2.00 ea		270,000.00	-	-	270,000.00	540,000	1,007,042
		Unload & set horiz end-suction pump, 400 gpm, 30 hp	1.00 ea	3,724.86	100.00	751.80	-	4,576.66	4,577	8,166
		Unload & set horiz end-suction pump, 1200 gpm, 75 hp	1.00 ea	4,966.48	100.00	1,002.40	-	6,068.88	6,069	10,825
		Unload & set vertical turbine pump, 1450 gpm, 200 hp	2.00 ea	6,208.10	100.00	1,253.00	-	7,561.10	15,122	26,970
		Field adjustments & final connections	1.00 ls	5,697.20	5,000.00	279.16	-	10,976.36	10,976	19,977
		KLB-066 Process Pumps	**4.00 ea**	**6,701.19**	**170,225.00**	**1,134.84**		**178,061.02**	**712,244**	**1,325,673**
	KLB-070	**Facility Mechanical**								
		Rent crane self-propelled, 4x4 telescoping boom 5 ton	10.00 day	-	-	275.40	-	275.40	2,754	4,909
		Mechanical allowance for RO process piping	1.00 ls	25,861.32	50,000.00	837.48	-	76,698.80	76,699	140,832
		KLB-070 Facility Mechanical	**1.00 ls**	**25,861.32**	**50,000.00**	**3,591.48**		**79,452.80**	**79,453**	**145,741**
	KLB-080	**Facility Electrical**								
		Electrical Allowance for tie-ins, connections & misc items	1.00 ls	10,791.36	1,500.00	-	-	12,291.36	12,291	22,032
		KLB-080 Facility Electrical	**1.00 ls**	**10,791.36**	**1,500.00**			**12,291.36**	**12,291**	**22,032**
	KLB-081	**Facility Instrumentation & Controls**								
		I&C Allowance	1.00 ls	4,046.76	4,000.00	-	-	8,046.76	8,047	14,672
		KLB-081 Facility Instrumentation & Controls	**1.00 ls**	**4,046.76**	**4,000.00**			**8,046.76**	**8,047**	**14,672**
		04 RO Process	**1.00 LS**	**105,192.42**	**3,431,275.00**	**12,254.68**		**3,548,722.10**	**3,548,722**	**6,608,296**
05		**Chemical Storage/Process**								
	KLB-039	**Interior CMU Walls**								
		Scaffolding, steel tubular, regular, rent/month only for complete system for face of walls, 6' -4" x 5' frames, excl. planks	77.40 csf	-	35.50	-	-	35.50	2,748	5,124
		Scaffolding, steel tubular, regular, accessory, plank, rent/mo, 2" x 10" x 16' long	40.00 ea	-	10.00	-	-	10.00	400	746
		Scaffolding, steel tubular, regular, labor only to setup & dismantle, bldg ext, 6' -4" x 5' frames, 2 stories, excl. planks	77.40 csf	186.49	-	-	-	186.49	14,434	25,727
		Scaffolding, planks, labor only to install & remove, 2"x10"x16', up to 50' high	40.00 ea	20.72	-	-	-	20.72	829	1,477
		Grout, concrete masonry unit (CMU) cores, 8" thick, 0.258 C.F./S.F., pumped, excludes blockwork	7,740.00 sf	2.61	1.14	0.21	-	3.96	30,646	55,351
		Grout, door frames, 3' x 7' opening, 2.5 C.F. per opening	5.00 opng	29.63	11.05	2.33	-	43.00	215	388
		Grout, door frames, 6' x 7' opening, 3.5 C.F. per opening	1.00 opng	39.50	15.45	3.10	-	58.05	58	105

Facility	WorkActiv	Description	Takeoff Quantity	Labor Cost/Unit	Material Cost/Unit	Equip Cost/Unit	Other Cost/Unit	Direct Cost Total/Unit	Direct Cost Total	Marked Up Total
	KLB-039	**Interior CMU Walls**								
		Masonry reinforcing bars, #3 and #4 reinforcing steel bars, placed horizontally, ASTM A615	5,418.00 lb	1.08	0.48	-	-	1.56	8,433	15,246
		Masonry reinforcing bars, #3 and #4 reinforcing steel bars, placed vertically, ASTM A615	6,966.00 lb	1.38	0.48	-	-	1.86	12,986	23,421
		Concrt block,high strngt,hollow,3500 psi,8"8"16",includs mortar and horzntl joint rnfrcng every other course,excluds scffldn,grout and verticl rnfrcng	7,740.00 sf	6.26	3.92	-	-	10.18	78,757	142,878
		KLB-039 Interior CMU Walls	**7,740.00 sf**	**12.87**	**6.24**	**0.21**		**19.32**	**149,506**	**270,464**
	KLB-044	**Fiberglass Stairs and Gratings**								
		Fiberglass Castings, angle, 2" x 2" x 1/4" thick	396.00 lf	5.89	5.00	-	-	10.89	4,313	7,851
		Fiberglass Castings, wide flange beam, 4" x 4" x 1/4" thick	80.00 lf	10.47	13.45	-	-	23.92	1,914	3,500
		Fiberglass grating floor support	2,144.00 sf	2.40	5.08	0.27	-	7.75	16,617	30,516
		Fiberglass Grating, molded, orange (for highly corrosive environment), 2" square mesh, 2" thick	2,144.00 sf	3.93	20.50	-	-	24.43	52,373	96,975
		KLB-044 Fiberglass Stairs and Gratings	**1.00 ls**	**16,740.49**	**57,899.52**	**576.56**		**75,216.57**	**75,217**	**138,842**
	KLB-064	**Chemical Storage/Process Equipment**								
		Purchase Threshold Inhibitor System Storage Tank, FRP double wall, 1000 gal, 5' da x 7.5' high	1.00 ea	-	21,000.00	-	-	21,000.00	21,000	39,163
		Purchase NaOH System Storage Tank, FRP double wall, 2000 gal, 7' da x 8.5' high	1.00 ea	-	33,000.00	-	-	33,000.00	33,000	61,541
		Purchase Citric Acid System Storage Tank, FRP double wall, 1000 gal, 5' da x 7.5' high	1.00 ea	-	23,000.00	-	-	23,000.00	23,000	42,893
		Purchase Corrosion Inhibitor System Storage Tank, FRP double wall, 1000 gal, 5' da x 7.5' high	1.00 ea	-	23,000.00	-	-	23,000.00	23,000	42,893
		Purchase NaClO System Salt Saturator Tank, FRP, 23 tons, 8' da x 15' high	1.00 ea	-	63,329.00	-	-	63,329.00	63,329	118,102
		Purchase NaClO System Storage Tank, FRP double wall, 7000 gal, 11.5' da x 12' high	1.00 ea	-	48,165.00	-	-	48,165.00	48,165	89,823
		Purchase Ammonium Sulfate Storage Tank, FRP double wall, 1000 gal, 5' da x 7.5' high	1.00 ea	-	23,000.00	-	-	23,000.00	23,000	42,893
		Purchase Fluoride System Storage Tank, FRP double wall, 1000 gal, 5' da x 7.5' high	1.00 ea	-	23,000.00	-	-	23,000.00	23,000	42,893
		Purchase Fluoride System Day Tank, polyethylene double wall, 35 gal, 2' da x 3' high	1.00 ea	-	650.00	-	-	650.00	650	1,212
		Purchase Sodium Hypochlorite (NaClO) Generator, 2-450lb/day units, 0.80% strength	1.00 ea	-	398,000.00	-	-	398,000.00	398,000	742,227
		Unload & set equipment	1.00 ls	14,899.44	1,000.00	3,007.20	-	18,906.64	18,907	33,782
		Final connections & adjustments	1.00 ls	22,788.80	6,000.00	1,116.64	-	29,905.44	29,905	53,798
		KLB-064 Chemical Storage/Process Equipment	**1.00 ls**	**37,688.24**	**663,144.00**	**4,123.84**		**704,956.08**	**704,956**	**1,311,218**
	KLB-065	**Chemical Feed/Metering Pumps**								

Facility	WorkActiv	Description	Takeoff Quantity	Labor Cost/Unit	Material Cost/Unit	Equip Cost/Unit	Other Cost/Unit	Direct Cost Total/Unit	Direct Cost Total	Marked Up Total
	KLB-065	**Chemical Feed/Metering Pumps**								
		Purchase Threshold Inhibitor System Metering Pump, peristaltic, 316 sst, 1.40 gph, 1/2 hp (service pump)	1.00 ea	-	37,000.00	-	-	37,000.00	37,000	69,001
		Purchase Threshold Inhibitor System Metering Pump, peristaltic, 316 sst, 1.40 gph, 1/2 hp (standby pump)	1.00 ea	-	37,000.00	-	-	37,000.00	37,000	69,001
		Purchase NaOH System Metering Pump, diaphragm, 316 sst, 3 gph, 1/2 hp (service pump)	1.00 ea	-	37,000.00	-	-	37,000.00	37,000	69,001
		Purchase NaOH System Metering Pump, diaphragm, 316 sst, 3 gph, 1/2 hp (standby pump)	1.00 ea	-	37,000.00	-	-	37,000.00	37,000	69,001
		Purchase Corrosion Inhibitor System Metering Pump, diaphragm, 316 sst, 2 gph, 1/2 hp (service pump)	1.00 ea	-	37,000.00	-	-	37,000.00	37,000	69,001
		Purchase Corrosion Inhibitor System Metering Pump, diaphragm, 316 sst, 2 gph, 1/2 hp (standby pump)	1.00 ea	-	37,000.00	-	-	37,000.00	37,000	69,001
		Purchase NaClO System Metering/Final Metering Pump, diaphragm, PVDF, 100 gph, 1 hp (service pump)	2.00 ea	-	37,000.00	-	-	37,000.00	74,000	138,002
		Purchase NaClO System Metering/Final Metering Pump, diaphragm, PVDF, 100 gph, 1 hp (standby pump)	2.00 ea	-	37,000.00	-	-	37,000.00	74,000	138,002
		Purchase Ammonium Sulfate Metering Pump, diaphragm, 316 sst, 2 gph, 1/2 hp (service pump)	1.00 ea	-	37,000.00	-	-	37,000.00	37,000	69,001
		Purchase Ammonium Sulfate Metering Pump, diaphragm, 316 sst, 2 gph, 1/2 hp (standby pump)	1.00 ea	-	37,000.00	-	-	37,000.00	37,000	69,001
		Purchase Fuoride System Metering Pump, peristaltic, 316 sst, 2 gph, 1/2 hp (service pump)	1.00 ea	-	37,000.00	-	-	37,000.00	37,000	69,001
		Purchase Fuoride System Metering Pump, peristaltic, 316 sst, 2 gph, 1/2 hp (standby pump)	1.00 ea	-	37,000.00	-	-	37,000.00	37,000	69,001
		Unload & set chemical metering pumps	14.00 ea	284.04	50.00	25.71	-	359.74	5,036	9,035
		Field adjustments & final connections	1.00 ls	11,394.40	2,800.00	558.32	-	14,752.72	14,753	26,526
		KLB-065 Chemical Feed/Metering Pumps	**14.00 ea**	**1,097.92**	**37,250.00**	**65.59**		**38,413.51**	**537,789**	**1,001,575**
	KLB-066	**Process Pumps**								
		Purchase NaOH System Transfer Pump, horiz end-suction, 316 sst, 4 gpm, 1/2 hp motor (service pump)	1.00 ea	-	10,000.00	-	-	10,000.00	10,000	18,649
		Purchase NaOH System Transfer Pump, horiz end-suction, 316 sst, 4 gpm, 1/2 hp motor (standby pump)	1.00 ea	-	10,000.00	-	-	10,000.00	10,000	18,649
		Purchase Citric Acid System Pump, horiz end-suction, 316 sst, 20 gpm, 1/2 hp motor (service pump)	1.00 ea	-	37,000.00	-	-	37,000.00	37,000	69,001
		Purchase Citric Acid System Pump, horiz end-suction, 316 sst, 20 gpm, 1/2 hp motor (standby pump)	1.00 ea	-	37,000.00	-	-	37,000.00	37,000	69,001

Facility	WorkActiv	Description	Takeoff Quantity	Labor Cost/Unit	Material Cost/Unit	Equip Cost/Unit	Other Cost/Unit	Direct Cost Total/Unit	Direct Cost Total	Marked Up Total
	KLB-066	**Process Pumps**								
		Purchase Fluoride System Pump, horiz end-suction, 316 sst, 5 gpm, 1/4 hp motor (service pump)	1.00 ea	-	10,000.00	-	-	10,000.00	10,000	18,649
		Purchase Fluoride System Pump, horiz end-suction, 316 sst, 5 gpm, 1/4 hp motor (standy pump)	1.00 ea	-	10,000.00	-	-	10,000.00	10,000	18,649
		Unload & set horiz end-suction pump, 4 - 20 gpm	6.00 ea	497.06	50.00	44.98	-	592.05	3,552	6,356
		Field adjustments & final connections	1.00 ls	5,697.20	2,500.00	279.16	-	8,476.36	8,476	15,314
		KLB-066 Process Pumps	**6.00 ea**	**1,446.60**	**19,466.67**	**91.51**		**21,004.77**	**126,029**	**234,268**
	KLB-070	**Facility Mechanical**								
		Mechanical allowance for chemical piping	1.00 ls	14,243.00	10,000.00	697.90	-	24,940.90	24,941	45,279
		KLB-070 Facility Mechanical	**1.00 ls**	**14,243.00**	**10,000.00**	**697.90**		**24,940.90**	**24,941**	**45,279**
	KLB-080	**Facility Electrical**								
		Electrical Allowance for tie-ins, connections & misc items	1.00 ls	10,791.36	1,500.00	-	-	12,291.36	12,291	22,032
		KLB-080 Facility Electrical	**1.00 ls**	**10,791.36**	**1,500.00**			**12,291.36**	**12,291**	**22,032**
	KLB-081	**Facility Instrumentation & Controls**								
		I&C Allowance	1.00 ls	5,395.68	5,000.00	-	-	10,395.68	10,396	18,942
		KLB-081 Facility Instrumentation & Controls	**1.00 ls**	**5,395.68**	**5,000.00**			**10,395.68**	**10,396**	**18,942**
		05 Chemical Storage/Process	**1.00 LS**	**208,485.18**	**1,424,170.64**	**8,467.98**		**1,641,123.80**	**1,641,124**	**3,042,621**
06		**Electrical/Mechanical Room**								
	KLB-080	**Facility Electrical**								
		Electrical Euipment Purchase, includes MCC's, switchboards, transformers & panels	1.00 ls	-	250,000.00	-	-	250,000.00	250,000	466,223
		Electrical equipment (unload & set)	1.00 ls	6,735.60	500.00	719.72	-	7,955.32	7,955	14,221
		Wiring terminations for electrical equipment, final connections, tie-ins, & misc. undefined items	1.00 ls	21,582.72	5,000.00	-	-	26,582.72	26,583	47,793
		Variable frequency drives, custom-engineered, 460 volt, 15 HP motor size	1.00 ea	1,740.54	3,750.00	-	-	5,490.54	5,491	10,096
		Variable frequency drives, custom-engineered, 460 volt, 30 HP motor size (RO Flush Pump)	1.00 ea	2,296.03	6,175.00	-	-	8,471.03	8,471	15,608
		Variable frequency drives, custom-engineered, 460 volt, 75 HP motor size (RO CIP Pump)	1.00 ea	3,454.15	13,400.00	369.09	-	17,223.24	17,223	31,804
		Variable frequency drives, custom-engineered, 460 volt, 200 HP motor size (RO Feed Pumps)	2.00 ea	4,645.24	23,500.00	496.36	-	28,641.60	57,283	105,979
		KLB-080 Facility Electrical	**1.00 ls**	**45,099.52**	**325,825.00**	**2,081.53**		**373,006.05**	**373,006**	**691,724**
	KLB-081	**Facility Instrumentation & Controls**								
		I&C Allowance	1.00 ls	26,978.40	75,000.00	-	-	101,978.40	101,978	187,953
		KLB-081 Facility Instrumentation & Controls	**1.00 ls**	**26,978.40**	**75,000.00**			**101,978.40**	**101,978**	**187,953**
		06 Electrical/Mechanical Room	**1.00 LS**	**72,077.92**	**400,825.00**	**2,081.53**		**474,984.45**	**474,984**	**879,677**
07		**CIP Neutralization System**								
	KLB-010	**Structure and Slabs Earthwork**								
		Structure excavation and grading for bedding placement	65.00 cy	4.74	-	4.48	-	9.22	599	1,068

Facility	WorkActiv	Description	Takeoff Quantity	Labor Cost/Unit	Material Cost/Unit	Equip Cost/Unit	Other Cost/Unit	Direct Cost Total/Unit	Direct Cost Total	Marked Up Total
	KLB-010	**Structure and Slabs Earthwork**								
		Stockpile excavated material	65.00 cy	0.48	-	0.40	-	0.87	57	101
		Bedding, crushed stone 3/4" to 1/2"	31.00 cy	8.61	23.50	2.56	-	34.67	1,075	1,976
		Compaction of bedding with vibra-plate	31.00 cy	4.43	-	0.45	-	4.88	151	269
		Return stockpiled material to be used as backfill	15.00 cy	0.48	-	0.40	-	0.87	13	23
		Backfill w/backhoe crew	15.00 cy	8.61	-	2.56	-	11.17	168	299
		Compaction w/wacker	15.00 cy	3.06	-	0.43	-	3.50	52	94
		Compaction, water for, 3000 gallon truck, 3 mile haul	46.00 cy	0.47		0.51	-	0.97	45	80
		Load excess material	50.00 cy	0.36	-	0.30	-	0.65	33	58
		Haul excess material offsite w/20CY end dump, assumed 20 mile round trip	50.00 cy	3.47	-	7.14	-	10.60	530	945
		KLB-010 Structure and Slabs Earthwork	**65.00 cy**	**17.50**	**11.21**	**13.18**		**41.89**	**2,723**	**4,913**
	KLB-032	**Miscellaneous Concrete**								
		Concrete allowance for equipment pads	1.00 ls	-	-	-	2,500.00	2,500.00	2,500	4,456
		KLB-032 Miscellaneous Concrete	**1.00 ls**				**2,500.00**	**2,500.00**	**2,500**	**4,456**
	KLB-038	**Equipment Slabs**								
		C.I.P. concrete forms, mat foundation, plywood, 1 use, includes erecting, bracing, stripping and cleaning	280.00 sfca	10.02	3.08	-	-	13.10	3,668	6,609
		Slab screed setup	1,200.00 sf	0.50	0.16	-	-	0.66	789	1,422
		Chamfer strip, wood, 3/4" wide	144.00 lf	0.95	0.16	-	-	1.11	159	286
		Reinforcing Steel, in place, slab on grade, #3 to #7, A615, grade 60, incl labor for accessories, excl material for accessories	4.40 ton	962.89	1,000.00	-	-	1,962.89	8,637	15,757
		Reinforcing steel, unload and sort, add to base	4.40 ton	37.76	-	11.40	-	49.15	216	385
		Concrete, ready mix, regular weight, 4000 psi (incl % for testing & waste)	62.00 cy	-	107.00	-	-	107.00	6,634	12,372
		Structural concrete, placing, slab on grade, direct chute, over 6" thick, includes strike off & consolidation, excludes material	59.00 cy	14.96	-	0.40	-	15.36	906	1,616
		Concrete finishing, floors, manual screed	1,200.00 sf	0.27	-	-	-	0.27	327	584
		Finishing curb face, rub, float, & hand trowel	140.00 sf	0.86	-	-	-	0.86	120	213
		Concrete finishng,floors,basic finishng for unspecfd flatwork,bull float,manual float&manual steel trowel,excludes placing,striking off&consolidating	1,200.00 sf	1.04	-	-	-	1.04	1,242	2,214
		Concrete surface treatment, curing, sprayed membrane compound	13.40 csf	8.38	11.05	-	-	19.43	260	476
		KLB-038 Equipment Slabs	**59.00 cy**	**180.10**	**207.79**	**1.25**		**389.15**	**22,960**	**41,935**
	KLB-041	**Pre-Engineered Metal Building Systems**								
		Purchase Pre-Engineered Metal Screen Wall, Varco-Pruden, 100' long x 22' high w/Kingspan Granitstone insulated ext wall system	1.00 ea	-	20,000.00	-	-	20,000.00	20,000	37,298
		Install pre-engineered metal screen wall, Varco-Pruden, 100' long x 22' high	1.00 ea	-	-	-	15,000.00	15,000.00	15,000	26,736
		KLB-041 Pre-Engineered Metal Building Systems	**2,200.00 sf**		**9.09**		**6.82**	**15.91**	**35,000**	**64,034**
	KLB-046	**CMU Veneer Wainscotting**								
		Masonry anchors, veneer wall ties, corrugated, galvanized, 16 ga., 7/8" x 7"	1.70 c	46.13	28.00	-	-	74.13	126	229

Facility	WorkActiv	Description	Takeoff Quantity	Labor Cost/Unit	Material Cost/Unit	Equip Cost/Unit	Other Cost/Unit	Direct Cost Total/Unit	Direct Cost Total	Marked Up Total
	KLB-046	CMU Veneer Wainscotting								
		Cncrt block,dcrtv,slump block,2000 psi,4"thk,4"hgh x 16",incld mortr and hrzntl joint rnfrcn every other course,exclds scffld,grout and vertcl rnfrcng	400.00 sf	5.36	3.89	-	-	9.25	3,698	6,721
		KLB-046 CMU Veneer Wainscotting	400.00 sf	5.55	4.01			9.56	3,825	6,949
	KLB-060	RO System Equipment								
		Purchase CIP Neutralization Tank w/appurtenances, FRP double wall, 16000 gal, 14' da x 18' high	1.00 ea	-	72,000.00	-	-	72,000.00	72,000	134,272
		Purchase CIP Neutralization Recirculation Pump, horiz end-suction, 316 sst, 1100 gpm, 7.5 hp variable speed motor	1.00 ea	-	22,000.00	-	-	22,000.00	22,000	41,028
		Estimated shipping and handling charge	1.00 ea	-	5,000.00	-	-	5,000.00	5,000	9,324
		Unload & set equipment	1.00 ls	3,444.24	250.00	431.83	-	4,126.07	4,126	7,375
		Final connections & adjustments	1.00 ls	2,848.60	1,000.00	139.58	-	3,988.18	3,988	7,191
		KLB-060 RO System Equipment	1.00 ls	6,292.84	100,250.00	571.41		107,114.25	107,114	199,190
	KLB-070	Facility Mechanical								
		Rent crane self-propelled, 4x4 telescoping boom 5 ton	2.00 day	-	-	275.40	-	275.40	551	982
		Mechanical allowance for facility piping	1.00 ls	2,848.60	6,500.00	139.58	-	9,488.18	9,488	17,448
		KLB-070 Facility Mechanical	1.00 ls	2,848.60	6,500.00	690.38		10,038.98	10,039	18,430
	KLB-080	Facility Electrical								
		Allowance for Power, Signal & Controls, tie-ins, connections & misc items	1.00 ls	2,697.84	3,500.00	-	-	6,197.84	6,198	11,336
		Variable frequency drives, custom-engineered, 460 volt, 7.5 HP motor size	1.00 ea	1,148.02	2,875.00	-	-	4,023.02	4,023	7,408
		KLB-080 Facility Electrical	1.00 ls	3,845.86	6,375.00			10,220.86	10,221	18,744
	KLB-081	Facility Instrumentation & Controls								
		I&C Allowance	1.00 ls	1,079.14	4,000.00	-	-	5,079.14	5,079	9,383
		KLB-081 Facility Instrumentation & Controls	1.00 ls	1,079.14	4,000.00			5,079.14	5,079	9,383
		07 CIP Neutralization System	**1.00 LS**	**28,051.02**	**151,716.61**	**2,192.32**	**17,500.00**	**199,459.95**	**199,460**	**368,033**
08		**Finished Water Pump Station**								
	KLB-010	Structure and Slabs Earthwork								
		Structure excavation and grading for bedding placement	85.00 cy	4.74	-	4.48	-	9.22	784	1,397
		Stockpile excavated material	85.00 cy	0.48	-	0.40	-	0.87	74	132
		Bedding, crushed stone 3/4" to 1/2"	19.00 cy	8.61	23.50	2.56	-	34.67	659	1,211
		Compaction of bedding with vibra-plate	19.00 cy	4.43	-	0.45	-	4.88	93	165
		Return stockpiled material to be used as backfill	26.00 cy	0.48	-	0.40	-	0.87	23	40
		Backfill w/backhoe crew along structure/slab	26.00 cy	8.61	-	2.56	-	11.17	290	518
		Compaction w/wacker	26.00 cy	3.06	-	0.43	-	3.50	91	162
		Compaction, water for, 3000 gallon truck, 3 mile haul	45.00 cy	0.47		0.51	-	0.97	44	78
		Load excess material	59.00 cy	0.36	-	0.30	-	0.65	39	69
		Haul excess material offsite w/20CY end dump, assumed 20 mile round trip	59.00 cy	3.47	-	7.14	-	10.60	626	1,115
		KLB-010 Structure and Slabs Earthwork	85.00 cy	14.74	5.25	12.02		32.01	2,721	4,887
	KLB-020	Building Stemwall w/Footing								

Facility	WorkActiv	Description	Takeoff Quantity	Labor Cost/Unit	Material Cost/Unit	Equip Cost/Unit	Other Cost/Unit	Direct Cost Total/Unit	Direct Cost Total	Marked Up Total
	KLB-020	**Building Stemwall w/Footing**								
		C.I.P. concrete forms, footing, continuous wall, plywood, 2 use, includes erecting, bracing, stripping and cleaning	380.00 sfca	4.30	3.74	-	-	8.04	3,054	5,560
		Reinforcing Steel, in place, slab on grade, #3 to #7, A615, grade 60, incl labor for accessories, excl material for accessories	1.70 ton	962.89	1,000.00	-	-	1,962.89	3,337	6,088
		Reinforcing steel, unload and sort, add to base	1.70 ton	37.75	-	11.39	-	49.15	84	149
		Concrete, ready mix, regular weight, 4000 psi (incl % for testing & waste)	32.00 cy	-	107.00	-	-	107.00	3,424	6,385
		Structural concrete, placing, continuous footing, shallow, direct chute, includes strike off & consolidation, excludes material	23.50 cy	20.10	-	0.55	-	20.65	485	865
		Structural concrete, placing, walls, direct chute, 12" thick, includes strike off & consolidation, excludes material	7.00 cy	24.12	-	0.66	-	24.78	173	309
		Concrete finishing, floors, hand float top of footing	316.00 sf	0.44	-	-	-	0.44	140	249
		KLB-020 Building Stemwall w/Footing	**30.50 cy**	**134.90**	**214.60**	**1.21**		**350.71**	**10,697**	**19,605**
	KLB-024	**Structure Main Slab**								
		C.I.P. concrete forms, slab on grade, edge, wood, 6" to 12" high, 1 use, includes erecting, bracing, stripping and cleaning	65.00 sfca	8.79	2.44	-	-	11.23	730	1,314
		Slab screed setup	739.00 sf	0.50	0.16	-	-	0.66	486	876
		Expansion joint, premolded, bituminous fiber, 1" x 12"	15.00 lf	1.66	1.99	-	-	3.65	55	100
		Reinforcing Steel, in place, slab on grade, #3 to #7, A615, grade 60, incl labor for accessories, excl material for accessories	2.18 ton	962.89	1,000.00	-	-	1,962.89	4,269	7,789
		Reinforcing steel, unload and sort, add to base	2.18 ton	37.76	-	11.40	-	49.15	107	191
		Concrete, ready mix, regular weight, 4000 psi (incl % for testing & waste)	30.50 cy	-	107.00	-	-	107.00	3,264	6,086
		Structural concrete, placing, slab on grade, direct chute, over 6" thick, includes strike off & consolidation, excludes material	29.00 cy	14.96	-	0.40	-	15.36	446	794
		Concrete finishing, floors, manual screed	739.00 sf	0.27	-	-	-	0.27	202	359
		Concrete finishng,floors,basic finishng for unspecfd flatwork,bull float,manual float&manual steel trowel,excludes placing,striking off&consolidating	739.00 sf	1.04	-	-	-	1.04	765	1,364
		Concrete surface treatment, curing, sprayed membrane compound	7.39 csf	8.38	11.05	-	-	19.43	144	263
		KLB-024 Structure Main Slab	**29.00 cy**	**158.71**	**200.93**	**1.26**		**360.90**	**10,466**	**19,135**
	KLB-032	**Miscellaneous Concrete**								
		Concrete allowance for equipment pads, door stoops, etc	1.00 ls	-	-	-	2,500.00	2,500.00	2,500	4,456
		KLB-032 Miscellaneous Concrete	**1.00 ls**				**2,500.00**	**2,500.00**	**2,500**	**4,456**
	KLB-039	**Interior CMU Walls**								
		Scaffolding, steel tubular, regular, rent/month only for complete system for face of walls, 6' -4" x 5' frames, excl. planks	4.35 csf	-	35.50	-	-	35.50	154	288
		Scaffolding, steel tubular, regular, accessory, plank, rent/mo, 2" x 10" x 16' long	4.00 ea	-	10.00	-	-	10.00	40	75
		Scaffolding, steel tubular, regular, labor only to setup & dismantle, bldg ext, 6' -4" x 5' frames, 2 stories, excl. planks	4.35 csf	186.49	-	-	-	186.49	811	1,446

Facility	WorkActiv	Description	Takeoff Quantity	Labor Cost/Unit	Material Cost/Unit	Equip Cost/Unit	Other Cost/Unit	Direct Cost Total/Unit	Direct Cost Total	Marked Up Total
	KLB-039	**Interior CMU Walls**								
		Scaffolding, planks, labor only to install & remove, 2"x10"x16', up to 50' high	4.00 ea	20.72	-	-	-	20.72	83	148
		Grout, concrete masonry unit (CMU) cores, 8" thick, 0.258 C.F./S.F., pumped, excludes blockwork	435.00 sf	2.61	1.14	0.21	-	3.96	1,722	3,111
		Grout, door frames, 3' x 7' opening, 2.5 C.F. per opening	1.00 opng	29.63	11.05	2.33	-	43.01	43	78
		Masonry reinforcing bars, #3 and #4 reinforcing steel bars, placed horizontally, ASTM A615	340.00 lb	1.08	0.48	-	-	1.56	529	957
		Masonry reinforcing bars, #3 and #4 reinforcing steel bars, placed vertically, ASTM A615	392.00 lb	1.38	0.48	-	-	1.86	731	1,318
		Concrt block,high strngt,hollow,3500 psi,8"8"16",includs mortar and horzntl joint rnfrcng every other course,excluds scffldn,grout and verticl rnfrcng	435.00 sf	6.26	3.92	-	-	10.18	4,426	8,030
		KLB-039 Interior CMU Walls	**435.00 sf**	**13.08**	**6.34**	**0.21**		**19.63**	**8,540**	**15,449**
	KLB-040	**Miscellaneous Metals**								
		Ladder, shop fabricated, aluminum, 20" W, bolted to concrete, excl cage	15.00 vlf	29.85	51.00	1.69	-	82.54	1,238	2,270
		KLB-040 Miscellaneous Metals	**1.00 ls**	**447.81**	**765.00**	**25.31**		**1,238.12**	**1,238**	**2,270**
	KLB-041	**Pre-Engineered Metal Building Systems**								
		Purchase Pre-Engineered Metal Building, Varco-Pruden, 60' x 30' x 15' high w/Kingspan Granitstone insulated ext wall system (1800 sf of floor)	1.00 ea	-	55,000.00	-	-	55,000.00	55,000	102,569
		Install pre-engineered metal building, Varco-Pruden, 60' x 30' x 15' high (1800 sf of floor)	1.00 ea	-	-	-	23,400.00	23,400.00	23,400	41,708
		KLB-041 Pre-Engineered Metal Building Systems	**1,800.00 sf**		**30.56**		**13.00**	**43.56**	**78,400**	**144,277**
	KLB-042	**Building Doors & Openings**								
		Roof Hatches, with curb, 1" fiberglass insulation, aluminum curb & cover, 2'-6" x 3'-0"	1.00 ea	192.72	1,025.00	-	-	1,217.72	1,218	2,255
		Frames, steel, knock down, hollow metal, single, 16 ga., up to 5-3/4" deep, 7'-0" h x 3'-0" w	1.00 ea	62.16	151.00	-	-	213.16	213	392
		Frames, steel, knock down, hollow metal, double, 16 ga., up to 5-3/4" deep, 7'-0" h x 6'-0" w	2.00 ea	71.04	194.00	-	-	265.04	530	977
		Steel frames, add for baked enamel finish	3.00 ea	7.82	22.50	-	-	30.32	91	168
		Aluminum frames, add for transom frame (no glass or panel)	2.00 sf	6.42	42.50	-	-	48.92	98	181
		Doors, commercial, steel, insulated, half glass, 18 ga., 3'-0" x 7'-0" x 1-3/4" thick	5.00 ea	62.16	685.00	-	-	747.16	3,736	6,941
		HM transom panel, average cost, louvered, to 18 or 20 ga	36.00 sf	9.20	35.50	-	-	44.70	1,609	2,974
		Add for baked enamel finish, average cost per leaf	5.00 leaf	8.76	50.40	-	-	59.16	296	548
		Metal doors, receive, sort and spread, per manhour	1.00 mh	49.78	-	-	-	49.78	50	89
		Skylights, sandwich panels, fiberglass, for roofs, 2-3/4" thick, to 250 SF	100.00 sf	6.53	25.00	-	-	31.53	3,153	5,827
		Average, door hardware, interior keyed, single	1.00 set	31.08	140.00	-	-	171.08	171	316
		Average, door hardware, exterior keyed, pair, w/ panic	2.00 set	93.25	845.00	-	-	938.25	1,876	3,484
		Thresholds, aluminum, 8" wide x 1/2" thick	12.00 lf	8.29	16.50	-	-	24.79	297	547

Facility	WorkActiv	Description	Takeoff Quantity	Labor Cost/Unit	Material Cost/Unit	Equip Cost/Unit	Other Cost/Unit	Direct Cost Total/Unit	Direct Cost Total	Marked Up Total
	KLB-042	**Building Doors & Openings**								
		Louver, aluminum, extruded, with screen, mill finish, fixed blade, continuous line, stormproof	64.00 sf	20.19	41.50	-	-	61.69	3,948	7,256
		Louver, finishes, applied by manufacturer at additional cost, available in colors, baked enamel finish coating, add	64.00 sf	-	6.10	-	-	6.10	390	728
		KLB-042 Building Doors & Openings	**14.00 ea**	**245.09**	**1,017.56**			**1,262.66**	**17,677**	**32,683**
	KLB-043	**Building Roofing System**								
		Roof Deck Insulation, install polystyrene insulation, 4" thick, R20, 15 PSI compressive strength	1,800.00 sf	0.32	1.86	-	-	2.18	3,919	7,262
		Vapor Retarders, building paper, roof deck vapor barrier, class 1 metal decks	18.00 sq	11.16	21.50	-	-	32.66	588	1,080
		Walkway pads for roof, 2' x 2' EPDM	16.00 ea	2.49	10.15	-	-	12.64	202	374
		Sngl-ply memb,plys (pb),0.57 psf, full adhrd with cntct cemnt,100 mils	18.00 sq	77.32	250.00	7.74	-	335.06	6,031	11,121
		Final sealing for seams, corners & roof penetrations	1,800.00 sf	0.46	0.15	0.05	-	0.65	1,178	2,122
		KLB-043 Building Roofing System	**1,800.00 sf**	**1.68**	**4.82**	**0.12**		**6.62**	**11,919**	**21,959**
	KLB-045	**Roof Drain System**								
		Aluminum downspouts, enameled, 5" x 6", .024" thick	60.00 lf	5.48	5.78	-	-	11.26	675	1,232
		Elbows, aluminum, enameled, .025" thick, 5" x 6"	4.00 ea	7.07	7.50	-	-	14.57	58	106
		Pre-cast concrete spash block	4.00 ea	4.15	11.15	-	-	15.30	61	113
		Roof drain assembly, 2' x 4' sump, side outlet thru-wall acupper w/down drain connection	4.00 ea	213.65	535.00	-	-	748.65	2,995	5,514
		KLB-045 Roof Drain System	**1,800.00 sf**	**0.68**	**1.42**			**2.11**	**3,789**	**6,966**
	KLB-046	**CMU Veneer Wainscotting**								
		Masonry anchors, veneer wall ties, corrugated, galvanized, 16 ga., 7/8" x 7"	3.00 c	46.13	28.00	-	-	74.13	222	403
		Cncrt block,dcrtv,slump block,2000 psi,4"thk,4"hgh x 16",incld mortr and hrzntl joint rnfrcn every other course,exclds scffld,grout and vertcl rnfrcng	720.00 sf	5.36	3.89	-	-	9.25	6,657	12,097
		KLB-046 CMU Veneer Wainscotting	**720.00 sf**	**5.55**	**4.01**			**9.56**	**6,880**	**12,500**
	KLB-047	**Building Specialties & Furnishings**								
		Facility signs, markings & labels	1.00 ls	248.65	850.00	-	-	1,098.65	1,099	2,028
		Fire extinguishers, CO2, portable, with hose & "H" horn, 10 lb	1.00 ea	-	275.00	-	-	275.00	275	513
		Fire extinguishers, dry chemical, pressurized, standard type, portable, painted, 10 lb	1.00 ea	-	81.00	-	-	81.00	81	151
		Fire extinguishers, installation of extinguishers, on masonry or concrete	2.00 ea	37.30	10.00	-	-	47.30	95	170
		KLB-047 Building Specialties & Furnishings	**1.00 ls**	**323.24**	**1,226.00**			**1,549.24**	**1,549**	**2,863**
	KLB-048	**Building Finishes**								
		Misc paintings and coatings as required. includes surface prep for wall and ceiling paintings below	1.00 ls	4,170.56	500.00	300.00	-	4,970.56	4,971	8,901
		Paints & Coatings, floors, interior, acrylic sealer, one coat	1,800.00 sf	0.06	0.23	-	-	0.29	518	958
		Paints & coatings, walls & ceilings, interior, masonry or concrete block, latex paint, primer, smooth finish, spray	870.00 sf	0.06	0.10	-	-	0.16	141	259

Facility	WorkActiv	Description	Takeoff Quantity	Labor Cost/Unit	Material Cost/Unit	Equip Cost/Unit	Other Cost/Unit	Direct Cost Total/Unit	Direct Cost Total	Marked Up Total
	KLB-048	**Building Finishes**								
		Paints & coatings, walls & ceilings, interior, masonry or concrete block, latex paint, 2 coats, smooth finish, spray	870.00 sf	0.13	0.17	-	-	0.30	257	470
		KLB-048 Building Finishes	**1.00 ls**	**4,437.94**	**1,148.90**	**300.00**		**5,886.84**	**5,887**	**10,587**
	KLB-066	**Process Pumps**								
		Purchase Finished Water Pump, vertical turbine, 316 sst, 1850 gpm, 150 hp variable speed (duty pump)	2.00 ea		145,000.00	-	-	145,000.00	290,000	540,819
		Purchase Finished Water Pump, vertical turbine, 316 sst, 1850 gpm, 150 hp variable speed (standby pump)	1.00 ea		145,000.00	-	-	145,000.00	145,000	270,409
		Unload & set vertical turbine pump, 1850 gpm, 150 hp	3.00 ea	4,966.48	100.00	1,002.40	-	6,068.88	18,207	32,476
		Field adjustments & final connections	1.00 ls	5,697.20	4,500.00	279.16	-	10,476.36	10,476	19,044
		KLB-066 Process Pumps	**3.00 ea**	**6,865.55**	**146,600.00**	**1,095.45**		**154,561.00**	**463,683**	**862,749**
	KLB-070	**Facility Mechanical**								
		Rent crane self-propelled, 4x4 telescoping boom 5 ton	10.00 day	-	-	275.40	-	275.40	2,754	4,909
		Plumbing allowance for facility drain, washdown & service piping	1.00 ls	11,394.40	5,000.00	558.32	-	16,952.72	16,953	30,629
		Pipe, steel, black, welded, 24" diameter, schedule 40, Spec. A-53, includes two rod, roll hanger & saddle, sized for covering, 10' OC	75.00 lf	215.51	183.00	6.98	-	405.49	30,412	55,338
		Gasket and bolt set, for flanges, 150 lb., 24" pipe size	20.00 ea	307.71	180.00	-	-	487.71	9,754	17,683
		Elbow, 90 Deg., steel, carbon steel, black, long radius, butt weld, standard weight, 24" pipe size, includes 1 weld per joint and weld machine	6.00 ea	1,690.28	3,450.00	54.74	-	5,195.02	31,170	57,265
		Tee, steel, carbon steel, black, straight, butt weld, standard weight, 24" pipe size, includes 1 weld per joint and weld machine	3.00 ea	2,462.98	6,150.00	79.76	-	8,692.74	26,078	48,004
		Flange, steel, forged steel, weld neck, 150 lb., 24" pipe size, includes 1 weld per joint and weld machine	12.00 ea	862.04	1,300.00	27.92	-	2,189.96	26,280	48,127
		Valves, iron body, butterfly, lug type, gear operated, 150 lb., 24"	4.00 ea	2,298.79	13,400.00	-	-	15,698.79	62,795	116,348
		Valves, iron body, silent check, bronze trim, compact wafer type, twin disc, 24"	4.00 ea	2,298.79	14,100.00	-	-	16,398.79	65,595	121,569
		Expansion Joints, bellows type, neoprene cover, flanged spool, 10" face to face, 24" diameter	4.00 ea	644.64	1,800.00	-	-	2,444.64	9,779	18,023
		Water supply distribution piping, piping polyvinyl chloride, 24" diameter, AWWA C905, PR 100, DR 25, excludes excavation or backfill, unless specified	200.00 lf	17.22	43.00	2.16	-	62.38	12,476	22,947
		Field adjustments, connections, and misc undefined items	1.00 ls	10,344.53	6,000.00	334.99	-	16,679.52	16,680	30,224
		KLB-070 Facility Mechanical	**1.00 ls**	**96,344.79**	**208,875.00**	**5,505.26**		**310,725.05**	**310,725**	**571,066**
	KLB-072	**Facility HVAC**								
		HVAC Allowance for Room Area	1,800.00 sf	-	-	-	16.00	16.00	28,800	51,333
		KLB-072 Facility HVAC	**1,800.00 sf**				**16.00**	**16.00**	**28,800**	**51,333**
	KLB-080	**Facility Electrical**								
		Electrical Euipment Purchase, includes MCC, switchboard, transformer & panels	1.00 ls	-	85,000.00	-	-	85,000.00	85,000	158,516

Facility	WorkActiv	Description	Takeoff Quantity	Labor Cost/Unit	Material Cost/Unit	Equip Cost/Unit	Other Cost/Unit	Direct Cost Total/Unit	Direct Cost Total	Marked Up Total
	KLB-080	Facility Electrical								
		Electrical equipment (unload & set)	1.00 ls	4,041.36	250.00	431.83	-	4,723.19	4,723	8,439
		Wiring terminations for electrical equipment, final connections, tie-ins, & misc. undefined items	1.00 ls	10,791.36	2,500.00	-	-	13,291.36	13,291	23,897
		Variable frequency drives, custom-engineered, 460 volt, 150 HP motor size	3.00 ea	3,848.91	18,000.00	411.27	-	22,260.18	66,781	123,484
		LED Lighting allowance	1,800.00 sf	4.20	6.00	-	-	10.20	18,355	33,607
		Electrical allowance for conduit, wire, boxes, & devices	1,800.00 sf	15.58	9.00	-	-	24.58	44,244	80,197
		KLB-080 Facility Electrical	**1.00 ls**	**61,978.41**	**168,750.00**	**1,665.64**		**232,394.05**	**232,394**	**428,139**
	KLB-081	Facility Instrumentation & Controls								
		I&C Allowance	1.00 ls	10,791.36	25,000.00	-	-	35,791.36	35,791	65,857
		KLB-081 Facility Instrumentation & Controls	**1.00 ls**	**10,791.36**	**25,000.00**			**35,791.36**	**35,791**	**65,857**
		08 Finished Water Pump Station	**1.00 LS**	**222,265.96**	**944,500.89**	**12,189.48**	**54,700.00**	**1,233,656.33**	**1,233,656**	**2,276,781**
09		**Chlorine Contact Tank**								
	KLB-010	Structure and Slabs Earthwork								
		Structure excavation, common earth, 10 to 14' deep	1,400.00 cy	1.93	-	2.22	-	4.15	5,810	10,355
		Structure excavation and grading for bedding placement	1,300.00 cy	4.74	-	4.48	-	9.22	11,984	21,361
		Stockpile excavated material	2,700.00 cy	0.48	-	0.40	-	0.87	2,354	4,196
		Bedding, crushed stone 3/4" to 1/2"	76.00 cy	8.61	23.50	2.56	-	34.67	2,635	4,844
		Compaction of bedding with vibra-plate	76.00 cy	4.43	-	0.45	-	4.88	371	661
		Return stockpiled material to be used as backfill	1,925.00 cy	0.48	-	0.40	-	0.87	1,678	2,991
		Backfill w/backhoe crew along structure walls	1,060.00 cy	8.61	-	2.56	-	11.17	11,838	21,101
		Compaction w/wacker	1,060.00 cy	3.06	-	0.43	-	3.50	3,707	6,608
		Backfill w/small dozer away from walls	865.00 cy	1.56	-	1.31	-	2.86	2,478	4,416
		Cpmpaction w/sheepsfoot	865.00 cy	0.54	-	1.04	-	1.57	1,361	2,426
		Compaction, water for, 3000 gallon truck, 3 mile haul	2,001.00 cy	0.47		0.51	-	0.97	1,949	3,473
		Load excess material	775.00 cy	0.36	-	0.30	-	0.65	507	903
		Haul excess material offsite w/20CY end dump, assumed 20 mile round trip	775.00 cy	3.47	-	7.14	-	10.60	8,218	14,648
		KLB-010 Structure and Slabs Earthwork	**2,700.00 cy**	**11.16**	**0.66**	**8.51**		**20.33**	**54,890**	**97,983**
	KLB-024	Structure Main Slab								
		C.I.P. concrete forms, mat foundation, plywood, 1 use, includes erecting, bracing, stripping and cleaning	380.00 sfca	10.02	3.08	-	-	13.10	4,978	8,970
		Slab screed setup	2,236.00 sf	0.50	0.16	-	-	0.66	1,470	2,649
		Waterstop, PVC, ribbed, with center bulb, 3/8" thick x 6" wide	252.00 lf	3.83	3.67	-	-	7.50	1,889	3,443
		Waterstop, rubber, field union, 3/8" x 6" wide, walls	8.00 ea	9.95	35.50	-	-	45.45	364	671
		Reinforcing Steel, in place, slab on grade, #3 to #7, A615, grade 60, incl labor for accessories, excl material for accessories	12.45 ton	962.89	1,000.00	-	-	1,962.89	24,438	44,585
		Reinforcing steel, unload and sort, add to base	12.45 ton	37.76	-	11.40	-	49.15	612	1,091
		Concrete, ready mix, regular weight, 4000 psi (incl % for testing & waste)	174.00 cy	-	107.00	-	-	107.00	18,618	34,721

Facility	WorkActiv	Description	Takeoff Quantity	Labor Cost/Unit	Material Cost/Unit	Equip Cost/Unit	Other Cost/Unit	Direct Cost Total/Unit	Direct Cost Total	Marked Up Total
	KLB-024	**Structure Main Slab**								
		Structural concrete, placing, slab on grade, pumped, over 6" thick, includes strike off & consolidation, excludes material	166.00 cy	18.28	-	4.31	-	22.58	3,749	6,682
		Concrete finishing, floors, manual screed	2,236.00 sf	0.27	-	-	-	0.27	610	1,088
		Concrete finishng,floors,basic finishng for unspecfd flatwork,bull float,manual float&manual steel trowel,excludes placing,striking off&consolidating	2,236.00 sf	1.04	-	-	-	1.04	2,315	4,126
		Concrete surface treatment, curing, sprayed membrane compound	22.36 csf	8.38	11.05	-	-	19.43	435	795
		KLB-024 Structure Main Slab	**166.00 cy**	**148.00**	**205.13**	**5.16**		**358.29**	**59,477**	**108,820**
	KLB-031	**18" Structure Walls**								
		C.I.P. concrete forms, wall, box out for opening, to 18" thick, over 10 S.F. (use perimeter), includes erecting, bracing, stripping and cleaning	16.00 lf	10.90	2.48	-	-	13.38	214	385
		C.I.P. concrete forms, wall, job built, plywood, 8 to 16' high, 2 use, includes erecting, bracing, stripping and cleaning	5,136.00 sfca	8.42	1.34	-	-	9.76	50,142	89,941
		Waterstop, PVC, ribbed, with center bulb, 3/8" thick x 6" wide	348.00 lf	3.83	3.67	-	-	7.50	2,608	4,755
		Waterstop, rubber, field union, 3/8" x 6" wide, walls	6.00 ea	9.95	35.50	-	-	45.45	273	504
		Reinforcing Steel, in place, walls, #3 to #7, A615, grade 60, incl labor for accessories, excl material for accessories	12.50 ton	738.22	1,000.00	-	-	1,738.22	21,728	39,759
		Reinforcing steel, unload and sort, add to base	12.50 ton	37.75	-	11.40	-	49.15	614	1,095
		Concrete, ready mix, regular weight, 4000 psi (incl % for testing & waste)	150.00 cy	-	107.00	-	-	107.00	16,050	29,932
		Structural concrete, placing, walls, pumped, over 15" thick, includes strike off & consolidation, excludes material	143.00 cy	26.42	-	6.22	-	32.64	4,668	8,319
		Concrete finishing, walls, includes breaking ties and patching voids	2,184.00 sf	0.84	0.04	-	-	0.88	1,930	3,447
		Concrete finishing, walls, burlap rub with grout, includes breaking ties and patching voids	2,952.00 sf	1.01	0.04	-	-	1.05	3,108	5,550
		Concrete surface treatment, curing, sprayed membrane compound	51.36 csf	8.38	8.05	-	-	16.43	844	1,539
		KLB-031 18" Structure Walls	**143.00 cy**	**444.52**	**262.80**	**7.22**		**714.54**	**102,180**	**185,224**
	KLB-035	**12" Structure Walls**								
		C.I.P. concrete forms, wall, box out for opening, to 18" thick, over 10 S.F. (use perimeter), includes erecting, bracing, stripping and cleaning	16.00 lf	10.90	2.48	-	-	13.38	214	385
		C.I.P. concrete forms, wall, job built, plywood, 8 to 16' high, 2 use, includes erecting, bracing, stripping and cleaning	3,108.00 sfca	8.42	1.34	-	-	9.76	30,343	54,427
		Waterstop, PVC, ribbed, with center bulb, 3/8" thick x 6" wide	38.00 lf	3.83	3.67	-	-	7.50	285	519
		Waterstop, rubber, field union, 3/8" x 6" wide, walls	2.00 ea	9.95	35.50	-	-	45.45	91	168
		Reinforcing Steel, in place, walls, #3 to #7, A615, grade 60, incl labor for accessories, excl material for accessories	5.00 ton	738.22	1,000.00	-	-	1,738.22	8,691	15,903
		Reinforcing steel, unload and sort, add to base	5.00 ton	37.75	-	11.40	-	49.15	246	438
		Concrete, ready mix, regular weight, 4000 psi (incl % for testing & waste)	60.00 cy	-	107.00	-	-	107.00	6,420	11,973

Facility	WorkActiv	Description	Takeoff Quantity	Labor Cost/Unit	Material Cost/Unit	Equip Cost/Unit	Other Cost/Unit	Direct Cost Total/Unit	Direct Cost Total	Marked Up Total
	KLB-035	**12" Structure Walls**								
		Structural concrete, placing, walls, pumped, 12" thick, includes strike off & consolidation, excludes material	57.00 cy	30.74	-	7.24	-	37.98	2,165	3,859
		Concrete finishing, walls, burlap rub with grout, includes breaking ties and patching voids	3,108.00 sf	1.01	0.04	-	-	1.05	3,273	5,843
		Concrete surface treatment, curing, sprayed membrane compound	31.08 csf	8.38	8.05	-	-	16.43	511	931
		KLB-035 12" Structure Walls	**57.00 cy**	**623.84**	**284.38**	**8.24**		**916.46**	**52,238**	**94,446**
	KLB-036	**Structure Roof Slab**								
		C.I.P. concrete forms, elevated slab, flat plate, plywood, to 15' high, 1 use, includes shoring, erecting, bracing, stripping and cleaning	1,601.00 sf	6.18	3.86	-	-	10.04	16,079	29,168
		C.I.P. concrete forms, elevated slab, box-out for slab openings, over 16" deep, 2 use, includes shoring, erecting, bracing, stripping and cleaning	54.00 sfca	12.11	2.51	-	-	14.62	789	1,418
		C.I.P. concrete forms, elevated slab, edge forms, 10" to 18" high, 1 use, includes shoring, erecting, bracing, stripping and cleaning	273.00 sfca	11.67	1.27	-	-	12.94	3,532	6,324
		C.I.P. concrete forms, elevated slab, perimeter deck and rail, straight, includes shoring, erecting, bracing, stripping and cleaning	182.00 lf	21.00	12.45	-	-	33.45	6,088	11,039
		Pump can blockouts	4.00 ea	93.24	12.50	-	-	105.74	423	758
		Slab screed setup	2,050.00 sf	0.50	0.16	-	-	0.66	1,347	2,429
		Chamfer strip, wood, 3/4" wide	188.00 lf	0.95	0.16	-	-	1.11	208	374
		Shores, vertical members, to 12' high, includes erect and strip by hand	30.00 ea	18.65	-	-	-	18.65	559	997
		Shores, reshoring	1,601.00 sf	0.71	0.58	-	-	1.29	2,066	3,759
		Reinforcing Steel, in place, slab on grade, #3 to #7, A615, grade 60, incl labor for accessories, excl material for accessories	9.80 ton	962.89	1,000.00	-	-	1,962.89	19,236	35,095
		Reinforcing steel, unload and sort, add to base	9.80 ton	37.76	-	11.40	-	49.15	482	859
		Concrete, ready mix, regular weight, 4000 psi (incl % for testing & waste)	118.00 cy	-	107.00	-	-	107.00	12,626	23,546
		Structural concrete, placing, elevated slab, pumped, over 10" thick, includes strike off & consolidation, excludes material	112.00 cy	18.79	-	4.43	-	23.21	2,600	4,634
		Concrete finishing, floors, manual screed	2,050.00 sf	0.27	-	-	-	0.27	559	997
		Finishing curb face, rub, float, & hand trowel	273.00 sf	0.86	-	-	-	0.86	233	416
		Finishing elev slab, bull float, manual float & manual steel trowel	2,050.00 sf	1.04	-	-	-	1.04	2,122	3,783
		Finishing, underside elevated decks, break ties and patch voids	1,601.00 sf	0.84	0.04	-	-	0.88	1,415	2,527
		Concrete surface treatment, curing, sprayed membrane compound	39.24 csf	8.38	11.05	-	-	19.43	763	1,395
		KLB-036 Structure Roof Slab	**112.00 cy**	**333.33**	**296.32**	**5.42**		**635.08**	**71,129**	**129,517**
	KLB-040	**Miscellaneous Metals**								
		Ladder, shop fabricated, aluminum, 20" W, bolted to concrete, excl cage	36.00 vlf	29.85	51.00	1.69	-	82.54	2,972	5,448
		Bilco J-4ALH20 floor/vault/sidewalk door, 3' x 3' aluminum H-20 rated, 164lb (delivered)	3.00 ea	235.66	992.51	37.50	-	1,265.67	3,797	7,013
		KLB-040 Miscellaneous Metals	**1.00 ls**	**1,781.74**	**4,813.53**	**173.25**		**6,768.52**	**6,769**	**12,461**
	KLB-054	**Hypochlorite Induction Mixer System**								

Facility	WorkActiv	Description	Takeoff Quantity	Labor Cost/Unit	Material Cost/Unit	Equip Cost/Unit	Other Cost/Unit	Direct Cost Total/Unit	Direct Cost Total	Marked Up Total
	KLB-054	**Hypochlorite Induction Mixer System**								
		Concrete anchor block/pedestal for boom crane	1.00 ls	491.17	500.00	-	-	991.17	991	1,808
		M-4000-01 Hypochlorite induction mixer w/boom crane & control panel, delivered (purchase)	1.00 ls	-	42,750.00	-	-	42,750.00	42,750	79,724
		Install induction mixer	1.00 ea	1,709.16	50.00	83.75	-	1,842.91	1,843	3,289
		Install boom crane	1.00 ea	569.72	25.00	27.92	-	622.64	623	1,112
		Install control panel	1.00 ea	1,079.14	25.00		-	1,104.14	1,104	1,970
		KLB-054 Hypochlorite Induction Mixer System	**1.00 ea**	**3,849.19**	**43,350.00**	**111.67**		**47,310.86**	**47,311**	**87,903**
	KLB-070	**Facility Mechanical**								
		Mechanical allowance for wall penetrations & misc items	1.00 ls	2,278.88	5,000.00	111.66	-	7,390.54	7,391	13,585
		Slide gates, hydraulic structures, aluminum, self contained, 48" x 48", incl. anchor bolts & grout	2.00 ea	2,029.39	8,500.00	557.39	-	11,086.77	22,174	40,924
		KLB-070 Facility Mechanical	**1.00 ls**	**6,337.65**	**22,000.00**	**1,226.43**		**29,564.08**	**29,564**	**54,510**
	KLB-080	**Facility Electrical**								
		Electrical Allowance for tie-ins, connections & misc items	1.00 ls	2,697.84	5,800.00	-	-	8,497.84	8,498	15,625
		KLB-080 Facility Electrical	**1.00 ls**	**2,697.84**	**5,800.00**			**8,497.84**	**8,498**	**15,625**
	KLB-081	**Facility Instrumentation & Controls**								
		I&C Allowance	1.00 ls	1,079.14	5,000.00	-	-	6,079.14	6,079	11,248
		KLB-081 Facility Instrumentation & Controls	**1.00 ls**	**1,079.14**	**5,000.00**			**6,079.14**	**6,079**	**11,248**
		09 Chlorine Contact Tank	**1.00 LS**	**206,893.53**	**203,780.26**	**27,459.27**		**438,133.06**	**438,133**	**797,737**
10		**Brine Discharge Station**								
	KLB-010	**Structure and Slabs Earthwork**								
		Structure excavation and grading for bedding placement	24.00 cy	4.74	-	4.48	-	9.22	221	394
		Stockpile excavated material	24.00 cy	0.48	-	0.40	-	0.87	21	37
		Bedding, crushed stone 3/4" to 1/2"	10.00 cy	8.61	23.50	2.56	-	34.67	347	637
		Compaction of bedding with vibra-plate	10.00 cy	4.43	-	0.45	-	4.88	49	87
		Return stockpiled material to be used as backfill	5.00 cy	0.48	-	0.40	-	0.87	4	8
		Backfill w/backhoe crew along structure/slab	5.00 cy	8.61	-	2.56	-	11.17	56	100
		Compaction w/wacker	5.00 cy	3.06	-	0.43	-	3.50	17	31
		Compaction, water for, 3000 gallon truck, 3 mile haul	15.00 cy	0.47		0.51	-	0.97	15	26
		Load excess material	19.00 cy	0.36	-	0.30	-	0.65	12	22
		Haul excess material offsite w/20CY end dump, assumed 20 mile round trip	19.00 cy	3.47	-	7.14	-	10.60	201	359
		KLB-010 Structure and Slabs Earthwork	**24.00 cy**	**16.49**	**9.79**	**13.04**		**39.33**	**944**	**1,702**
	KLB-014	**Site Appurtenances**								
		Metal parking bumpers, pipe bollards, conc filled/painted, 8' L x 4' D hole, 8" diam.	8.00 ea	88.26	435.00	24.01	-	547.27	4,378	8,091
		KLB-014 Site Appurtenances	**1.00 ls**	**706.05**	**3,480.00**	**192.10**		**4,378.15**	**4,378**	**8,091**
	KLB-038	**Equipment Slabs**								
		C.I.P. concrete forms, mat foundation, plywood, 1 use, includes erecting, bracing, stripping and cleaning	104.00 sfca	10.02	3.08	-	-	13.10	1,362	2,455

Facility	WorkActiv	Description	Takeoff Quantity	Labor Cost/Unit	Material Cost/Unit	Equip Cost/Unit	Other Cost/Unit	Direct Cost Total/Unit	Direct Cost Total	Marked Up Total
	KLB-038	**Equipment Slabs**								
		Slab screed setup	315.00 sf	0.50	0.16	-	-	0.66	207	373
		Chamfer strip, wood, 3/4" wide	106.00 lf	0.95	0.16	-	-	1.11	117	211
		Reinforcing Steel, in place, slab on grade, #3 to #7, A615, grade 60, incl labor for accessories, excl material for accessories	0.90 ton	962.89	1,000.00	-	-	1,962.89	1,767	3,223
		Reinforcing steel, unload and sort, add to base	0.90 ton	37.76	-	11.40	-	49.16	44	79
		Concrete, ready mix, regular weight, 4000 psi (incl % for testing & waste)	12.60 cy	-	107.00	-	-	107.00	1,348	2,514
		Structural concrete, placing, slab on grade, direct chute, over 6" thick, includes strike off & consolidation, excludes material	12.00 cy	14.96	-	0.40	-	15.36	184	329
		Concrete finishing, floors, manual screed	315.00 sf	0.27	-	-	-	0.27	86	153
		Finishing curb face, rub, float, & hand trowel	52.00 sf	0.86	-	-	-	0.86	44	79
		Concrete finishng,floors,basic finishng for unspecfd flatwork,bull float,manual float&manual steel trowel,excludes placing,striking off&consolidating	315.00 sf	1.04	-	-	-	1.04	326	581
		Concrete surface treatment, curing, sprayed membrane compound	3.67 csf	8.38	11.05	-	-	19.43	71	130
		KLB-038 Equipment Slabs	**12.00 cy**	**238.88**	**223.04**	**1.26**		**463.18**	**5,558**	**10,128**
	KLB-070	**Facility Mechanical**								
		Mechanical allowance for pipe risers, connections & misc items	1.00 ls	2,848.60	2,500.00	139.58	-	5,488.18	5,488	9,988
		KLB-070 Facility Mechanical	**1.00 ls**	**2,848.60**	**2,500.00**	**139.58**		**5,488.18**	**5,488**	**9,988**
	KLB-080	**Facility Electrical**								
		Electrical Allowance for tie-ins, connections & misc items	1.00 ls	1,618.70	1,650.00	-	-	3,268.70	3,269	5,962
		KLB-080 Facility Electrical	**1.00 ls**	**1,618.70**	**1,650.00**			**3,268.70**	**3,269**	**5,962**
	KLB-081	**Facility Instrumentation & Controls**								
		Instrument enclosure, watershed, pedestal mounted, 20" x 20" x 12", Nema 4x sst, Hoffman WS2020	1.00 ea	269.78	1,650.00	-	-	1,919.78	1,920	3,558
		S4 Chlorine analyzer/transmitter, HACH CLT10 w/SC200 controller & PH/temp	1.00 ea	539.57	3,965.00		-	4,504.57	4,505	8,356
		F4, Flow element & transmitter, electromagnetic, 12" size Promag 53W1F	1.00 ea	1,709.16	9,000.00	-	-	10,709.16	10,709	19,830
		Turbidimeter/transmitter, 1720E w/controller	1.00 ea	539.57	2,941.00	-	-	3,480.57	3,481	6,446
		Gasket and bolt set, for flanges, 150 lb., 12" pipe size	2.00 ea	139.21	41.50	-	-	180.71	361	651
		KLB-081 Facility Instrumentation & Controls	**1.00 ls**	**3,336.49**	**17,639.00**			**20,975.49**	**20,975**	**38,842**
		10 Brine Discharge Station	**1.00 LS**	**11,772.18**	**28,180.43**	**659.85**		**40,612.46**	**40,612**	**74,712**
11		**RW Bypass Decarbonator (Menifee)**								
	KLB-010	**Structure and Slabs Earthwork**								
		Selective demolition, saw cutting asphalt w/hand held saw	80.00 lf	2.49	0.15	0.60	-	3.24	259	462
		Selective demolition, remove asphalt for new concrete pad construction	400.00 sf	0.61	-	0.18	-	0.79	314	560
		Structure excavation and grading for bedding placement	16.00 cy	4.74	-	4.48	-	9.22	148	263
		Stockpile excavated material	16.00 cy	0.48	-	0.40	-	0.87	14	25
		Bedding, crushed stone 3/4" to 1/2"	7.00 cy	8.61	23.50	2.56	-	34.67	243	446
		Compaction of bedding with vibra-plate	7.00 cy	4.43	-	0.45	-	4.88	34	61
		Return stockpiled material to be used as backfill	4.00 cy	0.48	-	0.40	-	0.87	3	6

Facility	WorkActiv	Description	Takeoff Quantity	Labor Cost/Unit	Material Cost/Unit	Equip Cost/Unit	Other Cost/Unit	Direct Cost Total/Unit	Direct Cost Total	Marked Up Total
	KLB-010	**Structure and Slabs Earthwork**								
		Backfill w/backhoe crew	4.00 cy	8.61	-	2.56	-	11.17	45	80
		Compaction w/wacker	4.00 cy	3.06	-	0.44	-	3.50	14	25
		Compaction, water for, 3000 gallon truck, 3 mile haul	11.00 cy	0.47		0.51	-	0.98	11	19
		Load demolished/excess material	17.00 cy	0.36	-	0.30	-	0.65	11	20
		Haul demolished/excess material offsite w/20CY end dump, assumed 20 mile round trip	17.00 cy	3.47	-	7.14	-	10.60	180	321
		Patch pave asphalt around perimeter of concrete pad upon completion	76.00 sf	4.25	2.60	1.26	-	8.11	616	1,115
		KLB-010 Structure and Slabs Earthwork	**16.00 cy**	**66.08**	**23.38**	**28.78**		**118.24**	**1,892**	**3,403**
	KLB-030	**Equipment Pads**								
		C.I.P. concrete forms, mat foundation, plywood, 1 use, includes erecting, bracing, stripping and cleaning	108.00 sfca	10.02	3.08	-	-	13.10	1,415	2,549
		Slab screed setup	324.00 sf	0.50	0.16	-	-	0.66	213	384
		Chamfer strip, wood, 3/4" wide	74.00 lf	0.95	0.16	-	-	1.11	82	147
		Reinforcing Steel, in place, slab on grade, #3 to #7, A615, grade 60, incl labor for accessories, excl material for accessories	1.00 ton	962.89	1,000.00	-	-	1,962.89	1,963	3,581
		Reinforcing steel, unload and sort, add to base	1.00 ton	37.75	-	11.40	-	49.15	49	88
		Concrete, ready mix, regular weight, 4000 psi (incl % for testing & waste)	14.00 cy	-	107.00	-	-	107.00	1,498	2,794
		Structural concrete, placing, slab on grade, direct chute, over 6" thick, includes strike off & consolidation, excludes material	13.50 cy	14.96	-	0.40	-	15.36	207	370
		Concrete finishing, floors, manual screed	324.00 sf	0.27	-	-	-	0.27	88	158
		Finishing curb face, rub, float, & hand trowel	36.00 sf	0.85	-	-	-	0.85	31	55
		Concrete finishng,floors,basic finishng for unspecfd flatwork,bull float,manual float&manual steel trowel,excludes placing,striking off&consolidating	324.00 sf	1.04	-	-	-	1.04	335	598
		Concrete surface treatment, curing, sprayed membrane compound	3.60 csf	8.38	11.05	-	-	19.43	70	128
		KLB-030 Equipment Pads	**1.00 ea**	**3,000.80**	**2,934.10**	**16.86**		**5,951.76**	**5,952**	**10,850**
	KLB-070	**Facility Mechanical**								
		Rent crane self-propelled, 4x4 telescoping boom 5 ton	5.00 day	-	-	275.40	-	275.40	1,377	2,454
		Mechanical allowance for new piping, existing pipe modifications, connections & misc items	1.00 ls	8,620.44	7,500.00	279.16	-	16,399.60	16,400	29,849
		KLB-070 Facility Mechanical	**1.00 ls**	**8,620.44**	**7,500.00**	**1,656.16**		**17,776.60**	**17,777**	**32,304**
	KLB-080	**Facility Electrical**								
		Allowance for Power, Signal & Controls, tie-ins, connections & misc items	1.00 ls	2,697.84	3,500.00	-	-	6,197.84	6,198	11,336
		Variable frequency drives, custom-engineered, 460 volt, 7.5 HP motor size	1.00 ea	1,148.02	2,875.00	-	-	4,023.02	4,023	7,408
		KLB-080 Facility Electrical	**1.00 ls**	**3,845.86**	**6,375.00**			**10,220.86**	**10,221**	**18,744**
	KLB-081	**Facility Instrumentation & Controls**								
		I&C Allowance	1.00 ls	1,079.14	4,000.00	-	-	5,079.14	5,079	9,383
		KLB-081 Facility Instrumentation & Controls	**1.00 ls**	**1,079.14**	**4,000.00**			**5,079.14**	**5,079**	**9,383**
	KLB-188	**Post-Treatment Equipment**								
		Purchase Decarbonator System, 3000 gpm, 60% removal efficiency	1.00 ea	-	140,000.00	-	-	140,000.00	140,000	261,085

Facility	WorkActiv	Description	Takeoff Quantity	Labor Cost/Unit	Material Cost/Unit	Equip Cost/Unit	Other Cost/Unit	Direct Cost Total/Unit	Direct Cost Total	Marked Up Total
	KLB-188	**Post-Treatment Equipment**								
		Unload & set system components	1.00 ls	6,208.10	250.00	1,253.00	-	7,711.10	7,711	13,765
		Field adjustments & connections	1.00 ls	8,620.44	-	279.16	-	8,899.60	8,900	15,863
		Rent crane self-propelled, 4x4 telescoping boom 5 ton	5.00 day	-	-	275.40	-	275.40	1,377	2,454
		KLB-188 Post-Treatment Equipment	**1.00 ea**	**14,828.54**	**140,250.00**	**2,909.16**		**157,987.70**	**157,988**	**293,167**
		11 RW Bypass Decarbonator (Menifee)	**1.00 LS**	**32,432.07**	**161,433.20**	**5,042.66**		**198,907.93**	**198,908**	**367,850**
12		**Brine Pump Station (Menifee)**								
	KLB-018	**Demolition Work**								
		Demo & remove existing brine pumps, vertical turbine, 1250 gpm	3.00 ea	3,724.86	-	751.80	-	4,476.66	13,430	23,938
		Demo & remove existing discharge piping	1.00 ls	24,832.40	-	2,506.00	-	27,338.40	27,338	48,728
		Load demolished material	1.00 ls	806.91	-	240.13	-	1,047.04	1,047	1,866
		Haul demolished material offsite (no tipping fee assumes contractor can salvage material)	6.00 lds	77.92	-	160.56	-	238.48	1,431	2,550
		Post-demolition concrete repairs/pump pad mods, as required	1.00 ls	-	-	-	2,500.00	2,500.00	2,500	4,456
		KLB-018 Demolition Work	**1.00 ls**	**37,281.40**		**5,964.89**	**2,500.00**	**45,746.29**	**45,746**	**81,538**
	KLB-066	**Process Pumps**								
		Purchase Brine Pump, vertical turbine, 316 sst, 1900 gpm, 125 hp variable speed (duty pump)	2.00 ea		175,000.00	-	-	175,000.00	350,000	652,712
		Purchase Brine Pump, vertical turbine, 316 sst, 1900 gpm, 125 hp variable speed (standby pump)	1.00 ea		175,000.00	-	-	175,000.00	175,000	326,356
		Unload & set vertical turbine pump, 1900 gpm, 125 hp	3.00 ea	4,966.48	100.00	1,002.40	-	6,068.88	18,207	32,476
		Field adjustments & final connections	1.00 ls	5,697.20	4,500.00	279.16	-	10,476.36	10,476	19,044
		KLB-066 Process Pumps	**3.00 ea**	**6,865.55**	**176,600.00**	**1,095.45**		**184,561.00**	**553,683**	**1,030,589**
	KLB-070	**Facility Mechanical**								
		Rent crane self-propelled, 4x4 telescoping boom 5 ton	10.00 day	-	-	275.40	-	275.40	2,754	4,909
		Gasket and bolt set, for flanges, 150 lb., 12" pipe size	15.00 ea	139.20	41.50	-	-	180.70	2,711	4,883
		Pipe, super duplex stainless steel, welded, 12" pipe size, type 2507, includes weld joint and clevis type hangers 10' OC	50.00 lf	86.20	330.00	2.79	-	419.00	20,950	38,702
		Pipe, super duplex stainless steel, welded, 18" pipe size, type 2507, includes weld joint and clevis type hangers 10' OC	30.00 lf	107.76	500.00	3.49	-	611.25	18,337	33,922
		Elbow, 90 Deg., super duplex stainless steel, long, butt weld, 12", type 2507, includes the weld machine	4.00 ea	1,512.36	1,650.00	48.98	-	3,211.33	12,845	23,440
		Tee, super duplex stainless steel, straight, butt weld, 12", type 2507, includes the weld machine	2.00 ea	2,268.54	1,900.00	73.47	-	4,242.00	8,484	15,435
		Flange, super duplex stainless steel, welded, weld neck, 150 lb., 12" diam., type 2507, includes making the weld and weld machine	10.00 ea	756.18	705.00	24.49	-	1,485.67	14,857	27,062
		Valves, stainless steel, swing check, flanged, 125 lb., 12"	3.00 ea	1,014.17	10,350.00	-	-	11,364.17	34,093	63,328
		Valves, stainless steel, plug valve, flanged, 200 psi, 12"	3.00 ea	1,014.17	9,400.00	-	-	10,414.17	31,243	58,013

Facility	WorkActiv	Description	Takeoff Quantity	Labor Cost/Unit	Material Cost/Unit	Equip Cost/Unit	Other Cost/Unit	Direct Cost Total/Unit	Direct Cost Total	Marked Up Total
	KLB-070	**Facility Mechanical**								
		Water supply distribution piping, piping polyvinyl chloride, 18" diameter, AWWA C905, PR 100, DR 25, excludes excavation or backfill, unless specified	100.00 lf	12.92	24.50	1.62	-	39.04	3,904	7,160
		Field adjustments, connections, and misc undefined items	1.00 ls	17,240.88	10,000.00	558.32	-	27,799.20	27,799	50,374
		KLB-070 Facility Mechanical	**1.00 ls**	**52,396.73**	**121,272.50**	**4,306.24**		**177,975.47**	**177,975**	**327,227**
	KLB-080	**Facility Electrical**								
		Allowance for Power, Signal & Controls, tie-ins, connections & misc items	1.00 ls	10,791.36	7,500.00	-	-	18,291.36	18,291	33,221
		Variable frequency drives, custom-engineered, 460 volt, 125 HP motor size	3.00 ea	3,848.91	15,700.00	411.27	-	19,960.18	59,881	110,616
		KLB-080 Facility Electrical	**1.00 ls**	**22,338.10**	**54,600.00**	**1,233.81**		**78,171.91**	**78,172**	**143,838**
	KLB-081	**Facility Instrumentation & Controls**								
		I&C Allowance	1.00 ls	8,093.52	10,000.00	-	-	18,093.52	18,094	33,075
		KLB-081 Facility Instrumentation & Controls	**1.00 ls**	**8,093.52**	**10,000.00**			**18,093.52**	**18,094**	**33,075**
		12 Brine Pump Station (Menifee)	**1.00 LS**	**140,706.39**	**715,672.50**	**14,791.30**	**2,500.00**	**873,670.19**	**873,670**	**1,616,266**

Estimate Totals

Description	Amount	Totals	Rate
Labor	2,404,279		
Material	9,583,184		
Construction Equipment	291,563		
Other Costs	1,401,160		
Direct Cost Sub-Total	**13,680,186**	**13,680,186**	
General Conditions	1,368,019		10.000 %
Material Sales & Use Tax	790,613		8.250 %
Sub-Total	**2,158,632**	**15,838,818**	
Mobilization/Demobilization	2,164,970		8.000 %
Contractors Overhead	1,583,882		10.000 %
Contractors Profit	979,383		5.000 %
Bonds, Permits and Insurance	411,341		2.000 %
Sub-Total	**5,139,576**	**20,978,394**	
Contingency	4,195,679		20.000 %
Sub-Total	**4,195,679**	**25,174,073**	
10/2015 Construction Cost		**25,174,073**	
Escalation to Midpoint @ 3%/yr	1,888,055		7.500 %
Sub-Total	**1,888,055**	**27,062,128**	
3/2018 Escalated Cost		**27,062,128**	

Additional Proposal Information

(This is as uploaded, a blank page will show if nothing was submitted)

Att 3b
Volume_II_PerrisII_Desalter_Final_Preliminary_Drawings.pdf

LOCATION MAP

VICINITY MAP

EASTERN MUNICIPAL WATER DISTRICT
SINCE 1950

RIVERSIDE COUNTY, CALIFORNIA

PRELIMINARY DESIGN REPORT

PERRIS II DESALINATION FACILITY

VOLUME 2

OCTOBER 2015

BOARD OF DIRECTORS

RANDY A. RECORD	PRESIDENT
DAVID J. SLAWSON	VICE PRESIDENT
JOSEPH KUEBLER	BOARD MEMBER AND TREASURER
PHILIP E. PAULE	BOARD MEMBER
RONALD W. SULLIVAN	BOARD MEMBER
PAUL D. JONES II, P.E.	GENERAL MANAGER

DRAWING INDEX

DRAWING NO.	TITLE
G-1	COVER SHEET, LOCATION AND VICINITY MAPS AND DRAWING INDEX
G-2	INSTRUMENTATION AND CONTROL LEGEND SHEET 1
G-3	INSTRUMENTATION AND CONTROL LEGEND SHEET 2
C-1	SITE PLAN
A-1	RO PROCESS BUILDING OVERALL LAYOUT - ULTIMATE
A-2	RO PROCESS BUILDING OVERALL LAYOUT - PHASE I
A-3	RO PROCESS BUILDING - PRELIMINARY ARCHITECTURAL ELEVATIONS
M-1	RO PROCESS AREA FLOOR PLAN - MAJOR EQUIPMENT LOCATIONS
M-2	CHEMICAL AREA FLOOR PLAN - MAJOR EQUIPMENT LOCATIONS
M-3	FINISHED WATER PUMP STATION - MAJOR EQUIPMENT LOCATIONS
E-1	ONE LINE DIAGRAM 1
E-2	ONE LINE DIAGRAM 2
E-3	ONE LINE DIAGRAM 3
I-1	SCADA BLOCK DIAGRAM 1
I-2	SCADA BLOCK DIAGRAM 2
I-3	RAW WATER
I-4	RAW WATER BLENDING/FILTERING
I-5	RO FEED PUMPS
I-6	RO MEMBRANE TRAIN 1
I-7	RO MEMBRANE TRAIN 2
I-8	FUTURE RO MEMBRANE TRAIN 3
I-9	PERMEATE DEGASIFICATION SYSTEM
I-10	CLEARWELL AND FINISHED WATER PUMP STATION
I-11	FINAL METERING
I-12	RO MEMBRANE CLEANING SYSTEM
I-13	RO MEMBRANE FLUSHING SYSTEM
I-14	CONCENTRATE PUMP SYSTEM
I-15	SODIUM HYPOCHLORITE GENERATION AND FEED SYSTEM 1
I-16	SULFURIC ACID STORAGE AND FEED SYSTEM
I-17	AMMONIUM SULFATE STORAGE AND FEED SYSTEM
I-18	SODIUM HYDROXIDE STORAGE AND FEED SYSTEM
I-19	THRESHOLD INHIBITOR STORAGE AND FEED SYSTEM
I-20	CORROSION INHIBITOR STORAGE AND FEED SYSTEM
I-21	FLUORIDE STORAGE AND FEED SYSTEM
I-22	CITRIC ACID STORAGE AND FEED SYSTEM
I-23	CHEMICAL AREA DRAIN SUMP SYSTEM AND CONTROL VALVE DETAILS
I-24	CIP NEUTRALIZATION
I-25	BYPASS DEGASIFICATION SYSTEM

APPROVED : DATE :

CHARLES BACHMANN - ASSISTANT GENERAL MANAGER, ENGINEERING

APPROVED BY:

DIRECTOR OF ENGINEERING DATE

EASTERN MUNICIPAL WATER DISTRICT

APPROVALS

	PROJECT MANAGER	INITIAL	DATE
	PROJECT ENG.		
	SUPERVISOR		
	O. OPERATIONS		
	MAINTENANCE		

REGISTERED PROFESSIONAL ENGINEER No. C37037 Civil STATE OF CALIFORNIA

CODED.
T.O.
CO
G-1

CH2MHILL

DESIGNED BY: T. SUNDARA
DRAWN BY: A. DONSON
CHECKED BY: C. GUAN

SPEC. NO.: WET WPN-CABLE

CAD FILE NAME: PDF-g001d.dgn

EASTERN MUNICIPAL WATER DISTRICT
PERRIS II DESALINATION FACILITY
PERRIS, CALIFORNIA

COVER SHEET, LOCATION AND VICINITY MAPS AND DRAWING INDEX

SYMBOL	DESCRIPTIONS	DATE	APPROVAL

REVISIONS

PRELIMINARY

NOM-SCO-EMWD USACE PERRIS II PDF-g001d.dgn PLOT DATE: 2015\10\07 PLOT TIME: 5:48:25 PM

INSTRUMENT IDENTIFICATION

EXAMPLE SYMBOLS

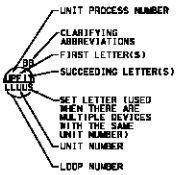

DIGITAL SYSTEM INTERFACES

- ▲ ANALOG INPUT
- ▼ ANALOG OUTPUT
- Δ_X DISCRETE INPUT
- ∇_X DISCRETE OUTPUT

INSTRUMENT IDENTIFICATION LETTERS TABLE

LETTER	FIRST-LETTER: PROCESS OR INITIATING VARIABLE	FIRST-LETTER: MODIFIER	SUCCEEDING-LETTERS: READOUT OR PASSIVE FUNCTION	SUCCEEDING-LETTERS: READOUT OR PASSIVE FUNCTION	SUCCEEDING-LETTERS: READOUT OR PASSIVE FUNCTION
A	ANALYSIS (+)		ALARM		
B	BURNER, COMBUSTION		USER'S CHOICE (*)	USER'S CHOICE (*)	USER'S CHOICE (*)
C	USER'S CHOICE (*)			CONTROL	
D	DENSITY (S.G.)	DIFFERENTIAL			
E	VOLTAGE		PRIMARY ELEMENT, SENSOR		
F	FLOW RATE	RATIO (FRACTION)			
G	USER'S CHOICE (*)		GLASS, GAUGE VIEWING DEVICE	GATE	
H	HAND (MANUAL)				HIGH
I	CURRENT (ELECTRICAL)		INDICATE		
J	POWER	SCAN			
K	TIME, TIME SCHEDULE	TIME RATE OF CHANGE		CONTROL STATION	
L	LEVEL		LIGHT (PILOT)		LOW
M	MOTION	MOMENTARY			MIDDLE, INTERMEDIATE
N	TORQUE		USER'S CHOICE (*)	USER'S CHOICE (*)	USER'S CHOICE (*)
O	USER'S CHOICE (*)		ORIFICE, RESTRICTION		
P	PRESSURE, VACUUM		POINT (TEST) CONNECTION		
Q	QUANTITY	INTEGRATE, TOTALIZE			
R	RADIATION		RECORD OR PRINT		
S	SPEED, FREQUENCY	SAFETY		SWITCH	
T	TEMPERATURE			TRANSMIT	
U	MULTI VARIABLE		MULTI FUNCTION	MULTI FUNCTION	MULTI FUNCTION
V	VIBRATION, MECHANICAL ANALYSIS			VALVE, DAMPER, LOUVER	
W	WEIGHT, FORCE		WELL		
X	UNCLASSIFIED (*)	X AXIS	UNCLASSIFIED (*)	UNCLASSIFIED (*)	UNCLASSIFIED (*)
Y	EVENT, STATE OR PRESENCE	Y AXIS		RELAY, COMPUTE, CONVERT	
Z	POSITION	Z AXIS		DRIVE, ACTUATOR, UNCLASSIFIED FINAL CONTROL ELEMENT	

TABLE BASED ON THE INSTRUMENTATION, SYSTEMS, AND AUTOMATION SOCIETY (ISA) STANDARD.

(+) WHEN USED, EXPLANATION IS SHOWN ADJACENT TO INSTRUMENT SYMBOL. SEE ABBREVIATIONS AND LETTER SYMBOLS.
(*) WHEN USED, DEFINE THE MEANING HERE FOR THE PROJECT.

LINE LEGEND

- PRIMARY PROCESS (CLOSED CONDUIT, DASHED LINE INDICATES ALTERNATE FLOW STREAM)
- SECONDARY PROCESS
- BYPASS PROCESS
- PROCESS (OPEN CHANNEL)
- ANALOG SIGNAL (4 TO 20 MADC, ETC.)
- DISCRETE (ON/OFF, ETC.)
- PNEUMATIC SIGNAL
- FILLED SYSTEM SIGNAL
- HYDRAULIC SYSTEM SIGNAL
- DATA LINK
- BUILDING OR FACILITY BOUNDARY
- PACKAGE SYSTEM EQUIPMENT
- TYPICAL BREAK

PARALLELING LINES: (2) (A) (B) 3(2)

(A) TOTAL OF 2 SIGNALS
(B) 3 TYPICAL SETS OF 2 SIGNALS EACH, TOTAL OF 6 SIGNALS.

CONNECTING LINES

NON-CONNECTING LINES

INTERFACE SYMBOLS

S A → PROCESS INTERFACE

A D → SIGNAL INTERFACE

A INTERFACE NO. (2 DIGITS)
D DESTINATION DRAWING NO.
S SOURCE DRAWING NO.

INTERFACE TO OR FROM PROCESS EXTERNAL TO PROJECT

PROCESS OR SIGNAL LINE CONTINUATION N
N=1,2,3,ETC

ABBREVIATIONS

ACK	ACKNOWLEDGE
AFD	ADJUSTABLE FREQUENCY DRIVE
BTD	BEARING TEMPERATURE DETECTOR
CL	CHLORINE
CS	CONSTANT SPEED
EMERG	EMERGENCY
FAP	FIRE ALARM PANEL
FOR	FORWARD-OFF-REMOTE
FP	FIELD PANEL
HOA	HAND-OFF-AUTO
LCP	LOCAL CONTROL PANEL
LOR	LOCAL-OFF-REMOTE
LR	LOCAL-REMOTE
MA	MANUAL-AUTO
MCC	MOTOR CONTROL CENTER
MFR	MANUFACTURER
MLD	MOTOR LEAKAGE DETECTOR
MTD	MOTOR TEMPERATURE DETECTOR
NC	NORMALLY CLOSED
NIC	NIC - NOT IN CONTRACT
OC	OPEN-CLOSE (D)
OF	OVERFLOW
OO	ON-OFF
OOA	ON-OFF-AUTO
ORP	OXIDATION REDUCTION POTENTIAL
OSC	OPEN-STOP-CLOSE
pH	HYDROGEN ION CONCENTRATION
PLC	PROGRAMMABLE LOGIC CONTROLLER
PCT	PARTICLE COUNTER
RIO	REMOTE INPUT/OUTPUT
SD	SULFUR DIOXIDE
SS	START-STOP
S/LOS	START/LOCK-OUT STOP
TC	TERMINATION CABINET
TURB	TURBIDITY
TYP	TYPICAL
UPS	UNINTERRUPTIBLE POWER SUPPLY

GENERAL INSTRUMENT OR FUNCTIONAL SYMBOLS

- FIELD MOUNTED
- REAR-OF-PANEL MOUNTED (OPERATOR INACCESSIBLE)
- PANEL MOUNTED (OPERATOR ACCESSIBLE)
- MCC MOUNTED
- COMPUTER FUNCTION
- PLC FUNCTION
- SHARED DISPLAY, SHARED CONTROL

TRANSDUCERS

A	ANALOG	I	CURRENT
D	DIGITAL	P	PNEUMATIC
E	VOLTAGE	PF	PULSE FREQUENCY
F	FREQUENCY	PD	PULSE DURATION
H	HYDRAULIC	R	RESISTANCE

EXAMPLE

FY TP — CURRENT TO PNEUMATIC TRANSDUCER (BACK OF PANEL, IN A FLOW LOOP)

ACCESSORY DEVICES

A	ALARM
C	CONTROLLER
I	INDICATOR
R	RECORDER
S	SWITCH
T	TRANSMITTER
X	UNCLASSIFIED

EXAMPLE

FIT T — TRANSMITTER AS AN ACCESSORY TO A FLOW ELEMENT

SPECIAL CASES

YL 00 — ON AND OFF EVENT LIGHTS

HS 00 — ON-OFF HAND SWITCH, MAINTAINED CONTACT SWITCH (CONTROLLED DEVICE WILL RESTART ON RETURN OF POWER AFTER POWER FAILURE).

HS SS — STOP-START HAND SWITCH MOMENTARY CONTACT SWITCHES (CONTROLLED DEVICE WILL NOT RESTART ON RETURN OF POWER AFTER POWER FAILURE).

SELF CONTAINED VALVE & EQUIPMENT TAG NUMBERS

D-WWXXX

D: ARV = AIR RELEASE VALVE
ASV = ANTI-SYPHON VALVE
AVRV = AIR AND VACUUM RELEASE VALVE
B = BLOWER
CCT = CHLORINE CONTACT TANK
CV = CHECK VALVE
E = INJECTOR
F = FILTER
FV = FLOW CONTROL VALVE (OPEN/CLOSE)
FCV = FLOW CONTROL VALVE (POSITIONING)
G = GATE
GEN = GENERATOR
HV = HAND VALVE (MANUAL)
LCV = LEVEL CONTROL VALVE
M = MECHANICAL EQUIPMENT
ME = MIXER
P = PUMP
PCV = PRESSURE CONTROL VALVE
PSE = RUPTURE DISK
PSV = PRESSURE RELIEF VALVE
S = SCREEN
SV = SOLENOID VALVE
T = TANK
TCV
SPS = SEWAGE PUMP STATION
PRV
VB = VACUUM BREAKER

WW= PROCESS NUMBER
XXX= LOOP NUMBER

GENERAL NOTES

1. THIS IS A STANDARD LEGEND, THEREFORE NOT ALL OF THIS INFORMATION MAY BE USED ON THIS PROJECT.
2. COMPONENTS AND PANELS SHOWN WITH A SINGLE ASTERISK (*) ARE PART OF A PACKAGE SYSTEM. SEE EQUIPMENT SPECIFICATIONS.
3. COMPONENTS AND PANELS SHOWN WITH A DOUBLE ASTERISK (**) ARE TO BE PROVIDED BY THE "SCADA SYSTEM SUPPLIER".
4. COMPONENTS AND PANELS SHOWN WITH A SOLID DIAMOND (◆) ARE TO BE PROVIDED BY THE PICS SUBCONTRACTOR.
5. COMPONENTS AND PANELS SHOWN WITH A DIAMOND (◇) ARE TO BE PROVIDED BY THE "ROEM SUPPLIER".
6. ALL TAG NUMBERS ON THE P&ID'S WILL BE PRECEDED BY "X" FOR THE FACILITY NUMBER.

APPROVED BY:
EXECUTIVE OF ENGINEERING DATE

EASTERN MUNICIPAL WATER DISTRICT

APPROVALS — PROJECT MANAGER, DATE, INITIAL, DATE; PROJECT ENG., PROJECT MGR., SUPERVISOR, SUPERVISOR

EMWD

G-1

CH2MHILL

PRELIMINARY

EASTERN MUNICIPAL WATER DISTRICT
PERRIS II DESALINATION FACILITY
PERRIS, CALIFORNIA

INSTRUMENTATION AND CONTROL
LEGEND SHEET 1

REVISIONS: SYMBOL | DESCRIPTION | DATE | APPROVAL

DESIGNED BY: DSE
DRAWN BY: SDS
CHECKED BY: DSE

DWG FILE NAME: mrp-g001.dgn

SHEET NO. 1 OF 47 PLACEABLE

NOW-SCOBEWRD USACE PERRIS W/ PDFs\g002d.dgn PLOT DATE: 2006\10\27 PLOT TIME: 3:40:04 PM

VALVE SYMBOLS

- GATE
- KNIFE GATE
- BUTTERFLY
- GLOBE
- BALL
- VEE-BALL
- PLUG
- SEAT PORT ECCENTRIC PLUG
- DIAPHRAGM
- PINCH
- NEEDLE
- SWING CHECK
- BALL CHECK
- BACKFLOW PREVENTER
- ROTARY
- TELESCOPE
- SAMPLE
- MUD
- PRESSURE RELIEF
- AIR AND/OR VACUUM RELEASE
- REGULATED SIDE PRESSURE CONTROL
- PRESSURE REGULATION (CLAY-TYPE)
- MULTI-PORT VALVE (GATE VALVE SHOWN. FOR OTHER VALVE TYPES, APPROPRIATE VALVE SYMBOL SHOWN). SEAT PORTS ARE IMPLIED BY INDICATED FLOW PATTERN.
- ANGLE GATE

GATE SYMBOLS

- SLUICE
- FABRICATED SLIDE
- STOP LOG
- BUTTERFLY
- FLAP

ACTUATOR SYMBOLS

- PNEUMATIC DIAPHRAGM SPRING-OPPOSED, SINGLE OR DOUBLE ACTING
- PNEUMATIC CYLINDER SINGLE OR DOUBLE ACTING ACTUATED BY ONE INPUT
- ELECTRIC MOTOR
- SOLENOID
- VALVE POSITIONER
- HYDRAULIC
- DIAPHRAGM, DIFFERENTIAL PRESSURE
- ELECTROHYDRAULIC
- MANUAL
- PNEUMATIC

NOTE:
ON LOSS OF PRIMARY POWER (PNEUMATIC, ELECTRICAL, OR HYDRAULIC)

XX: FO FAIL OPEN
FC FAIL CLOSED
FLP FAIL TO LAST POSITION

PRIMARY ELEMENT SYMBOLS

- PARSHALL FLUME
- WEIR
- ORFICE PLATE
- FLOW TUBE
- PITOT-STATIC
- VORTEX METER
- ULTRASONIC FLOWMETER
- ELECTROMAGNETIC FLOWMETER
- PROPELLER OR TURBINE METER
- THERMAL FLOWMETER
- LEVEL (BUBBLER TUBE)
- LS — LEVEL (FLOAT)
- FI — ROTAMETER
- DE — DENSITY METER
- XX — GENERIC
- LE — LEVEL, RADAR
- LE — LEVEL, SONIC

MISCELLANEOUS SYMBOLS

- VENT TO ATMOSPHERE
- AIR GAP
- DRAIN
- DRIP TRAP
- PIG INSERT POINT
- PIG CATCH POINT
- SELF CONTAINED AIR SUPPLY
- AIR PURGE SET
- FLUSHING CONNECTION
- SEAL WATER SET
- WATER PURGE SET
- FLEXIBLE CONNECTION
- AERATOR
- DIAPHRAGM SEAL
- ANNULAR DIAPHRAGM SEAL
- COMPOSITE SAMPLER
- FLAME TRAP
- CALIBRATION COLUMN
- INLINE SILENCER
- BLIND FLANGE
- PIPE CAP
- STRAINER
- BASKET STRAINER
- FILTER
- PULSATION DAMPENER
- EXPANSION CHAMBER
- TELEPHONE JACK
- DATA JACK
- MIXER
- PANEL CONTINUED ON SAME OR OTHER DRAWING
- PANEL OUTLINE
- PANEL NAME
- 120V — 120 VOLT, 60 HZ POWER
- 480V — 480 VOLT, 60 HZ POWER
- AIR SET XX = SUPPLY PRESSURE IN PSIG.
- PLUG
- RECEPTACLE
- RUPTURE DISK (VACUUM)
- RUPTURE DISK (PRESSURE)
- TV MONITOR
- TV CAMERA
- LOGIC ELEMENT: IF A AND NOT B THEN C
- LOGIC ELEMENT: IF A OR B THEN C
- RADIO ANTENNA
- INTERLOCK, SEE CONTROL DIAGRAMS
- HORN
- SKIMMING MECHANISM
- SCREW
- SCREW CONVEYOR
- MIXER
- ELECTRIC MOTOR
- PORTABLE RECEPTACLE/ CONTAINMENT AREA
- ANTENNA
- BUBBLE TRAP

PUMP AND COMPRESSOR SYMBOLS

- CENTRIFUGAL PUMP (DRY PIT)
- CENTRIFUGAL WET PIT PUMP OR TURBINE PUMP
- RECIPROCATING OR METERING PUMP (POSITIVE DISPLACEMENT)
- DIAPHRAGM PUMP
- GEAR PUMP OR BLOWER (POSITIVE DISPLACEMENT)
- PROGESSING CAVITY PUMP
- COMPRESSOR (CENTRIFUGAL)
- COMPRESSOR (PISTON)
- BLOWER OR FAN (CENTRIFUGAL)
- EJECTOR
- PISTON PUMP
- SUBMERSIBLE SUMP PUMP
- ROTARY PUMP
- VACUUM PUMP
- SCREW PUMP

XX: AS ADJUSTABLE SPEED
CS-1 CONSTANT SPEED (SINGLE SPEED)
CS-2 CONSTANT SPEED (TWO SPEED)

LINE SIZE AND FLOW STREAM INDENTIFICATION

(FOR REFERENCE ONLY. SEE SITE AND MECHANICAL DRAWINGS)

XX" CL01

PIPE DIAMETER IN INCHES — FLOW STREAM INDENTIFICATION

FLOW STREAM IDENTIFICATION

LEGEND	SERVICE	LEGEND	SERVICE
AS	AMMONIUM SULFATE	PRG	PURGE
BPW	BACKPULSE WATER FEED	PTW	PERMEATE TO WASTE
BW	BLEND WATER	PW	PERMEATE WATER
BWR	BACKWASH WATER RECLAIM	PWR	PURGE WATER RECLAIM
BWS	BACKWASH WATER SUPPLY	RCW	RECLAIM WATER
CA	CITRIC ACID	RJT	REJECT PIPING
CCR	CLEANING CONCENTRATE RETURN	ROC	RO CONCENTRATE
CF	CLEANING FEED/FLUSHING	ROF	RO FEED
CFI	CARTRIDGE FILTER INFLUENT	ROP	RO PERMEATE
CFE	CARTRIDGE FILTER EFFLUENT	RJT	REJECT
CFE/D	CARTRIDGE FILTER EFFLUENT TO DRAIN	ROB	RO BYPASS
CI	CORROSION INHIBITOR	RW	RAW WATER
CIP	CLEAN IN PLACE (CIP) PIPING	RWB	RAW WATER BYPASS
CPR	CLEANING PERMEATE RETURN	RWR	RINSE WATER RECLAIM
F	FLOURIDE	RW/D	RAW WATER TO DRAIN
FL	FLUSH (RO PERMEATE)	S	SAMPLE
FW	FINISHED WATER	SCS	SPENT CLEANING SOLUTION
FWS	FILTER WATER SUPPLY	SS	SANITARY SEWER
G	GAS NATURAL	SSOL	SALT SOLUTION
H2SO4	SULFURIC ACID	TI	THRESHOLD INHIBITOR
IA	INSTRUMENT AIR	V	VENT
NaOCL	SODIUM HYPOCHLORITE	VAC	VACUUM
NaOH	SODIUM HYDROXIDE	WLW	WELL WATER
NH3	AMMONIA	W1	PLANT WATER - POTABLE
OF	OVERFLOW	W2	PLANT WATER - PROCESS
PA	PROCESS AIR		
PFL	PERMEATE FLUSH		

APPROVED BY:
DIRECTOR OF ENGINEERING DATE

EASTERN MUNICIPAL WATER DISTRICT

PROJECT MANAGER		DATE
APPROVALS		INITIAL / DATE
	DESIGN ENG.	
	ELECTRICAL	
	INSTRUMENTATION	
	CONSTRUCTION	

G-3

CH2MHILL

PRELIMINARY

SYMBOL	DESCRIPTION	DATE	APPROVAL
	REVISIONS		

EASTERN MUNICIPAL WATER DISTRICT
PERRIS II DESALINATION FACILITY
PERRIS, CALIFORNIA

INSTRUMENTATION AND CONTROL DIAGRAM LEGEND SHEET 2

DESIGNED BY: DSE
DRAWN BY: SDS
CHECKED BY: DSE

DWG FILE NAME: PID-g003.dgn

SPEC. NO.: NOT APPLICABLE

PLOT DATE: 2/09/01 PLOT TIME: 3:40:08 PM

NOW-SCO-SEWRD USACE PERRIS W / PDFs/g003a.dgn

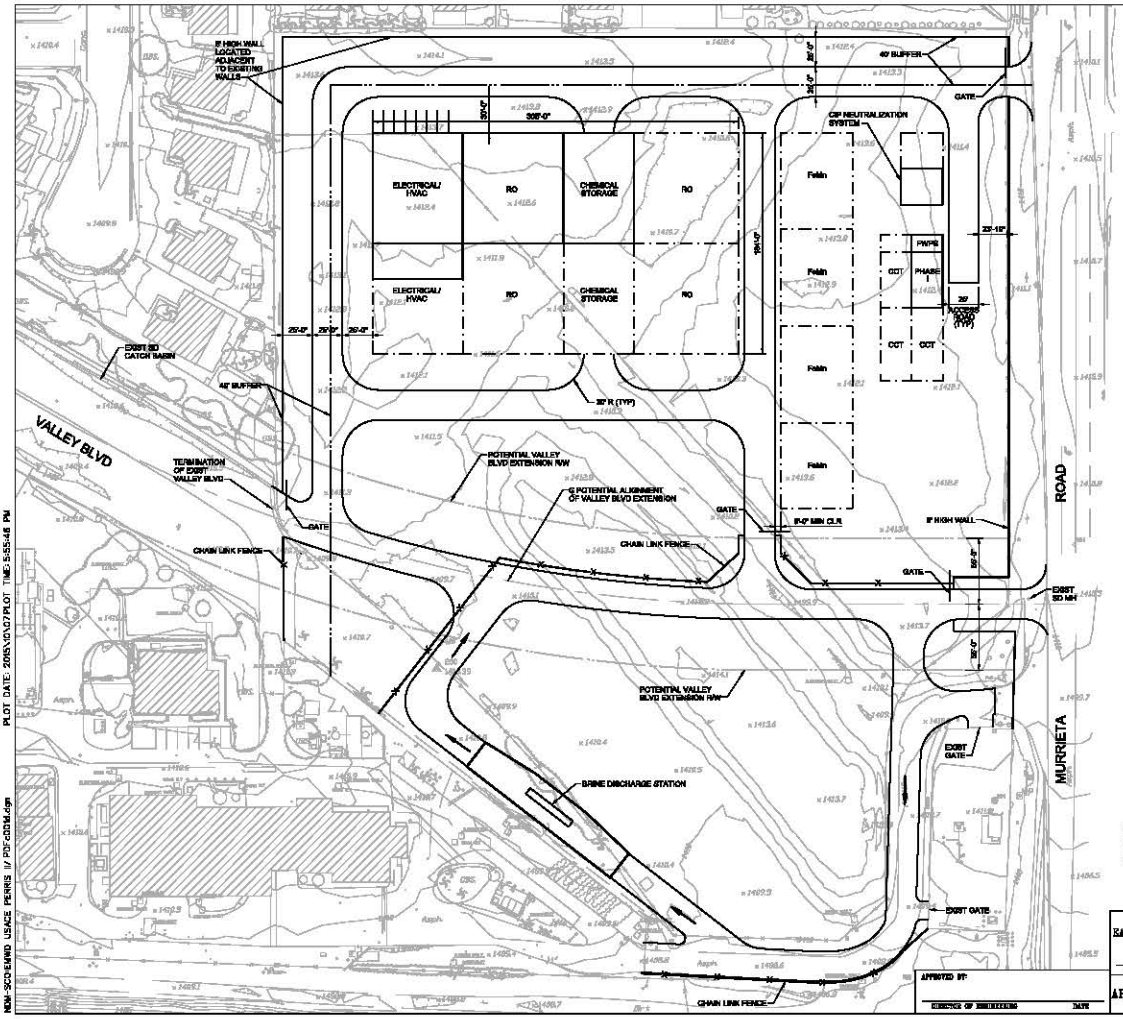

SITE PLAN

1"=40'

NOTES:

1. AERIAL SURVEY DATE: JUNE 18, 2014 (REVISED MAY 29, 2016)
2. AERIAL SURVEY SOURCE: RSF

EASTERN MUNICIPAL WATER DISTRICT

PROJECT MANAGER | DATE

APPROVALS | INITIAL | DATE

DESIGN ENGINEER | DATE

CONSTRUCTION MANAGER | DATE

APPROVED BY:

CHIEF OF ENGINEERING | DATE

REGISTERED PROFESSIONAL ENGINEER No. 52727 CIVIL STATE OF CALIFORNIA

CONS. C-1

CH2MHILL

PRELIMINARY

DESIGNED BY: DDC
DRAWN BY: DDC
CHECKED BY: DDC

CONS. FILE NAME: 152-0010.dgn

SPEC. NO.: NOT APPLICABLE

EASTERN MUNICIPAL WATER DISTRICT
PERRIS II DESALINATION FACILITY
PERRIS, CALIFORNIA

SITE PLAN

SYMBOL	DESCRIPTION	DATE	APPROVAL
	REVISIONS		

PLOT DATE: 2016\10\07 PLOT TIME: 5:55:46 PM

NOM-SCOD-EMWD USACE PERRIS II PDF-C0014.dgn

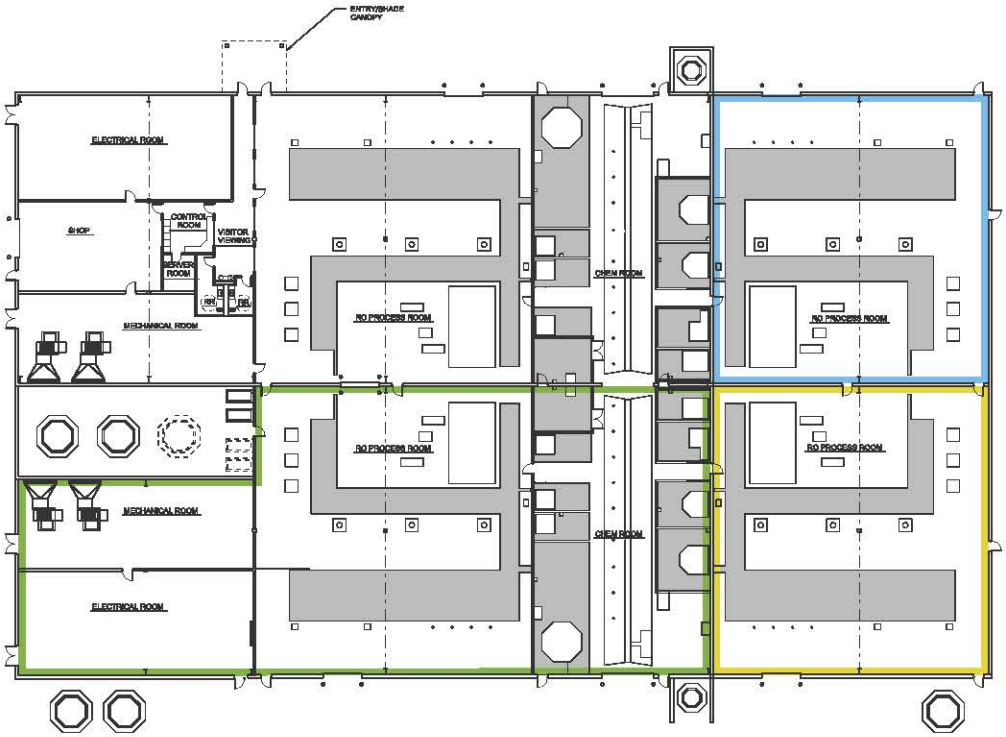

PHASE II
PHASE III
PHASE IV

N

FUTURE LAYOUT PLAN
1" = 16'-0"

EASTERN MUNICIPAL WATER DISTRICT
PERRIS II DESALINATION FACILITY
PERRIS, CALIFORNIA
RO PROCESS BUILDING
OVERALL LAYOUT - ULTIMATE

CH2MHILL

APPROVED BY:
CHIEF OF ENGINEERING DATE

EASTERN MUNICIPAL WATER DISTRICT
PROJECT MANAGER DATE
APPROVALS INITIAL DATE

A-1

PRELIMINARY

NOW-SCOTEMWD USACE PERRIS II PDF\D0314.dgn PLOT DATE: 2005\10\07 PLOT TIME: 2:46:57 PM

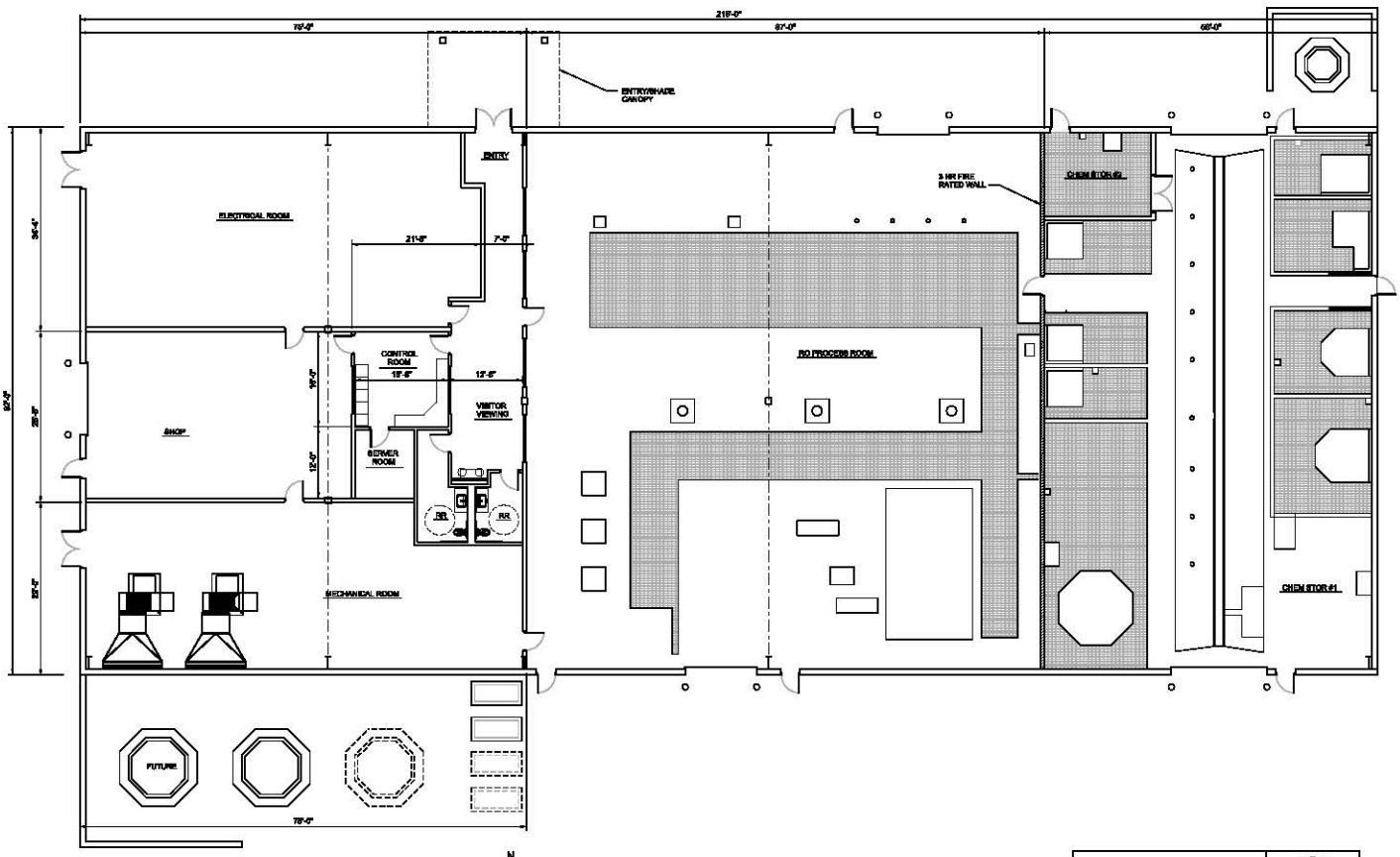

MAIN FLOOR PLAN

1/8" = 1'-0"

EASTERN MUNICIPAL WATER DISTRICT

APPROVALS

A-2

EASTERN MUNICIPAL WATER DISTRICT
PERRIS II DESALINATION FACILITY
PERRIS, CALIFORNIA

RO PROCESS BUILDING
OVERALL LAYOUT - PHASE I

CH2MHILL

PRELIMINARY

NEW-SCI-DEWWD USACE PERRIS N / PDF-D0724.dgn PLOT DATE: 2006\12\07 PLOT TIME: 3:10:20 PM

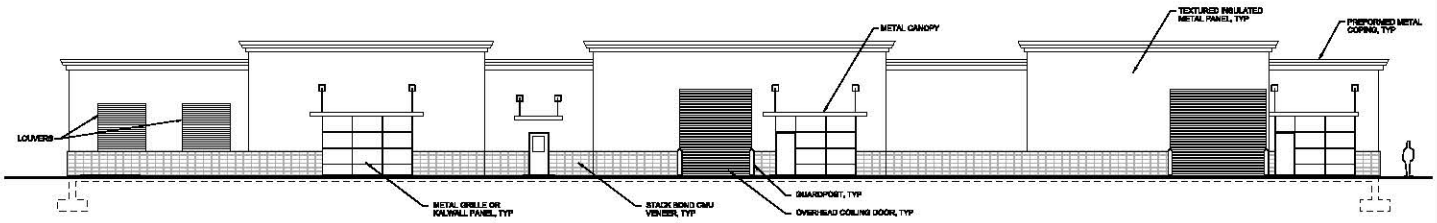

SOUTH ELEVATION

1/8" = 1'-0"

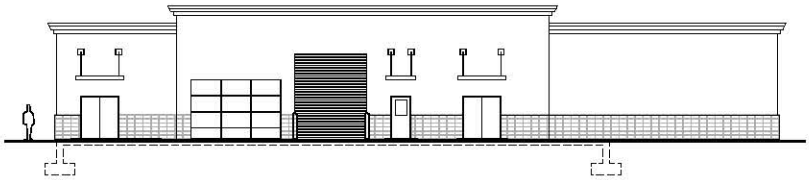

WEST ELEVATION

1/8" = 1'-0"

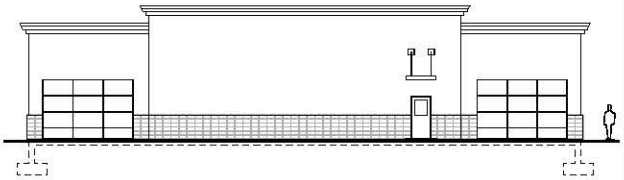

EAST ELEVATION

1/8" = 1'-0"

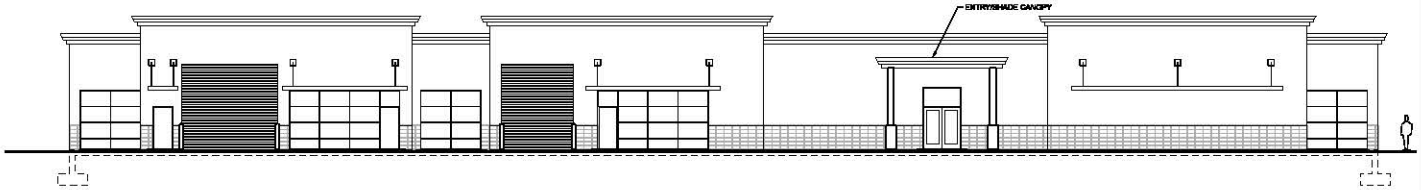

NORTH ELEVATION

1/8" = 1'-0"

APPROVED BY:

DIRECTOR OF ENGINEERING DATE

EASTERN MUNICIPAL WATER DISTRICT

PROJECT MANAGER

APPROVALS

	INITIAL	DATE
DIVISION MGR.		
ELECTRICAL		
MECHANICAL		
STRUCTURAL		
ENVIRONMENTAL		

LICENSED ARCHITECT — STATE OF CALIFORNIA

DRAWN: V.A.
CHKD: C.S

A-3

CH2MHILL

EASTERN MUNICIPAL WATER DISTRICT
PERRIS II DESALINATION FACILITY
PERRIS, CALIFORNIA

RO PROCESS BUILDING PRELIMINARY
ARCHITECURAL ELEVATIONS

SYMBOL	DESCRIPTION	DATE	APPROVAL

REVISIONS

PRELIMINARY

NOW-SCO-SWD USACE PERRIS N / PDF-0023d.dgn PLOT DATE: 2/26/01\01\05 PLOT TIME: 15:17:11 PM

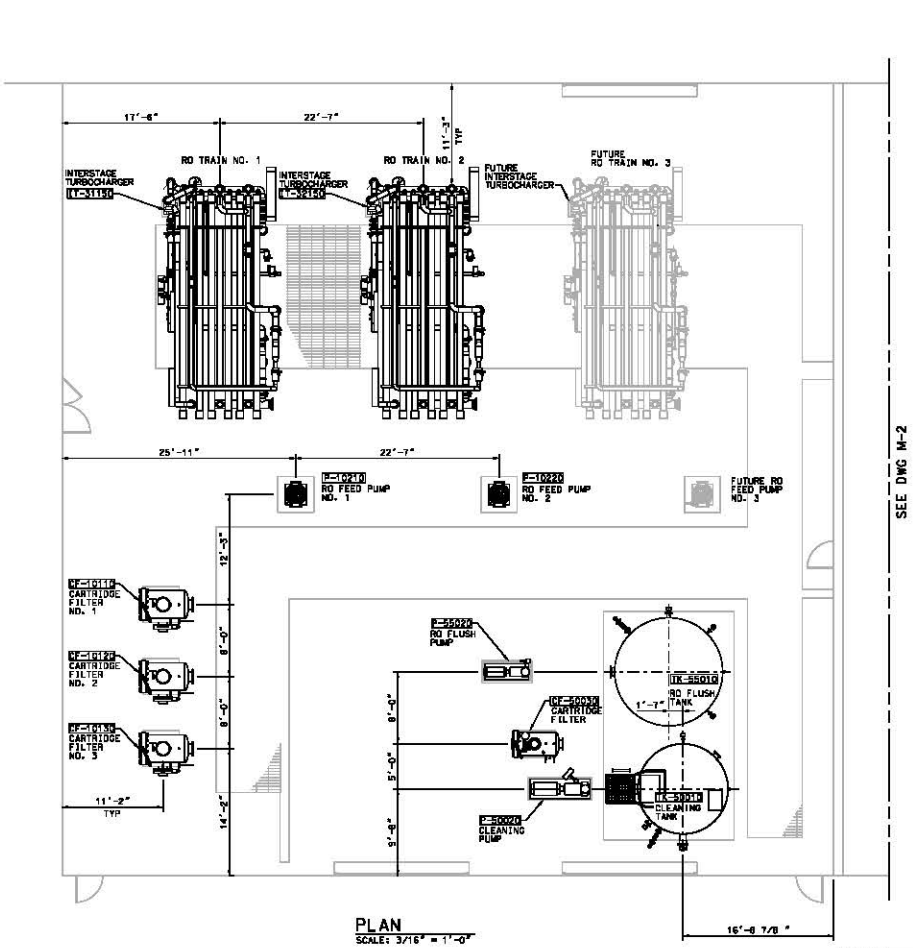

PLAN
SCALE: 3/16" = 1'-0"

N

EASTERN MUNICIPAL WATER DISTRICT
PERRIS II DESALINATION FACILITY
PERRIS, CALIFORNIA

RO PROCESS AREA FLOOR PLAN
MAJOR EQUIPMENT LOCATIONS

SYMBOL | DESCRIPTION | DATE | APPROVAL
REVISIONS

CH2MHILL

M-1

PRELIMINARY

EASTERN MUNICIPAL WATER DISTRICT

APPROVALS

APPROVED BY:
DIRECTOR OF ENGINEERING DATE

NEW-SCO-SEWRD USACE PERRIS M/PDFm1114.dgn PLOT DATE: 2/08/11 PLOT TIME: 8:17:17 PM

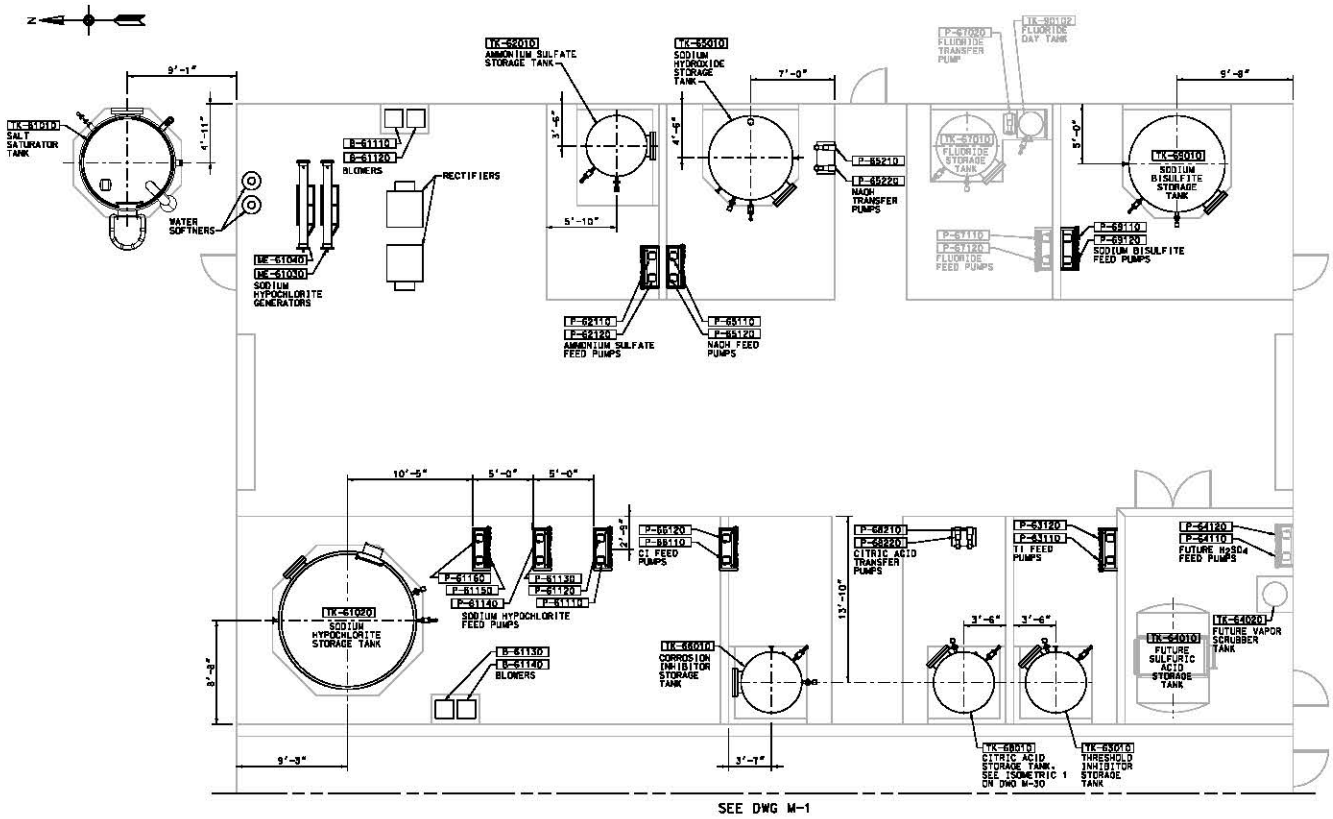

SEE DWG M-1

PLAN

SCALE: 1/4" = 1'-0"

APPROVED BY:

DIRECTOR OF ENGINEERING DATE

EASTERN MUNICIPAL WATER DISTRICT

PROJECT MANAGER DATE

APPROVALS

	INITIAL	DATE
DRAWN BY		
DESIGNED		
CHECKED		
SUPERVISOR		
ENGINEER		

M-2

EASTERN MUNICIPAL WATER DISTRICT
PERRIS II DESALINATION FACILITY
PERRIS, CALIFORNIA

CHEMICAL AREA FLOOR PLAN MAJOR EQUIPMENT LOCATIONS

CH2MHILL

PRELIMINARY

NOW-SCO-EWMD USACE PERRIS N:\PDFm\M224.dgn PLOT DATE: 2005\12\08 PLOT TIME: 8:17:24 PM

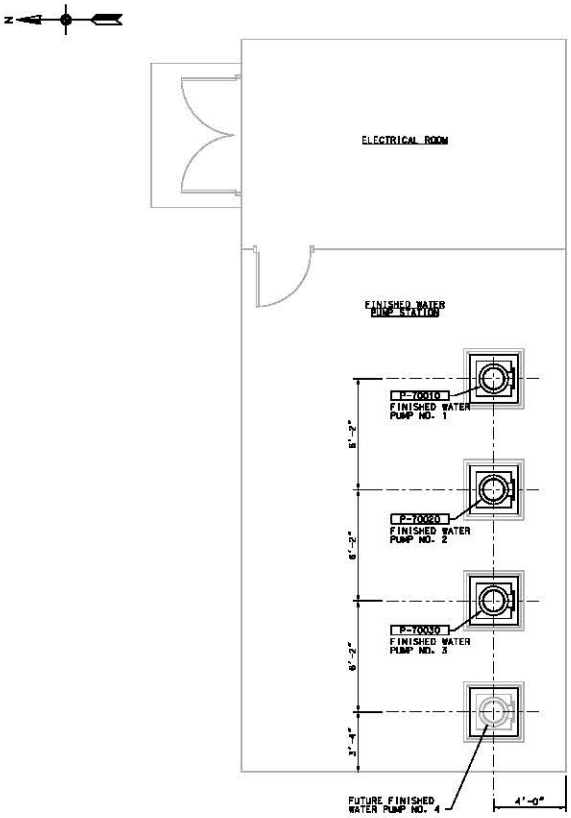

FLOOR PLAN
SCALE: 3/8" = 1'-0"

EASTERN MUNICIPAL WATER DISTRICT
PERRIS II DESALINATION FACILITY
PERRIS, CALIFORNIA

FINISHED WATER PUMP STATION
MAJOR EQUIPMENT LOCATIONS

SYMBOL	DESCRIPTION	DATE	APPROVAL
	REVISIONS		

CH2MHILL

DESIGNED BY: G. SUNG
DRAWN BY: J. WILSON
CHECKED BY: A. BARCLY

CONTR. NO. 1 - NOT APPLICABLE

CONTR. TITLE: NONE - PRELIMINARY

CONSTRUCTION
V.S.
C.S

M-3

PRELIMINARY

EASTERN MUNICIPAL WATER DISTRICT

PROJECT MANAGER

APPROVALS

	INITIAL	DATE
PROJECT MGR.		
ELECTRICAL		
MECHANICAL		
INSTRUMENTATION		

APPROVED BY:

DIRECTOR OF ENGINEERING DATE

NEW-SCCD-EWMD USACE PERRIS II/PFm113d.dgn PLOT DATE: 2006\12\08 PLOT TIME: 8:17:28 PM

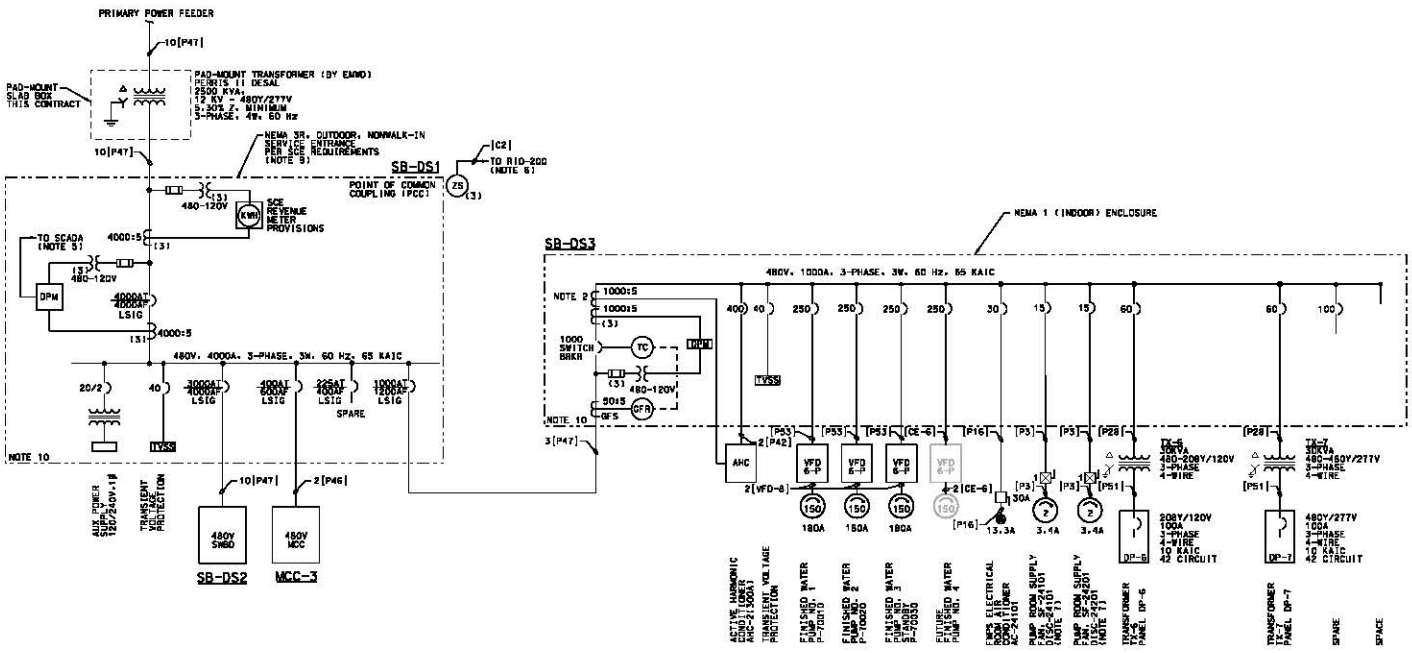

PERRIS II SERVICE ENTRANCE
ONE-LINE DIAGRAM

FINISHED WATER PUMP STATION
ONE-LINE DIAGRAM

EASTERN MUNICIPAL WATER DISTRICT

APPROVALS

E-1

EASTERN MUNICIPAL WATER DISTRICT
PERRIS II DESALINATION FACILITY
PERRIS, CALIFORNIA

ONE LINE DIAGRAM 1

CH2MHILL

PRELIMINARY

NOW-SCO-EMWD USACE PERRIS W/PDF=8071.dgn PLOT DATE: 2005\10\05 PLOT TIME: 8:17:33 PM

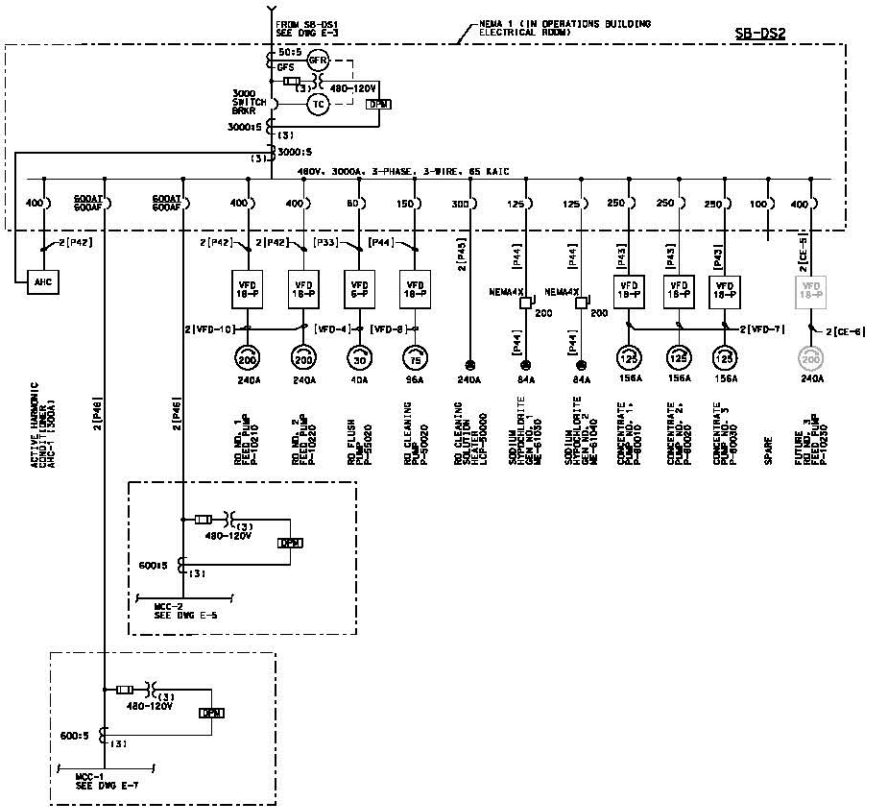

RO PROCESS AREA ONE-LINE DIAGRAM

APPROVED BY:

DIRECTOR OF ENGINEERING DATE

EASTERN MUNICIPAL WATER DISTRICT

PROJECT MANAGER DATE

APPROVALS

	INITIAL	DATE
DIVISION ENG.		
ELECTRICAL		
MECHANICAL		
INSTRUMENTATION		

E-2

CH2MHILL

PRELIMINARY

EASTERN MUNICIPAL WATER DISTRICT
PERRIS II DESALINATION FACILITY
PERRIS, CALIFORNIA

ONE LINE DIAGRAM 2

SYMBOL	DESCRIPTION	DATE	APPROVAL
	REVISIONS		

NEW-SCCD-EWRD USACE PERRIS W/PDFs8822d.dgn PLOT DATE: 2005\12\05 PLOT TIME: 8:17:37 PM

RO BUILDING ONE-LINE DIAGRAM

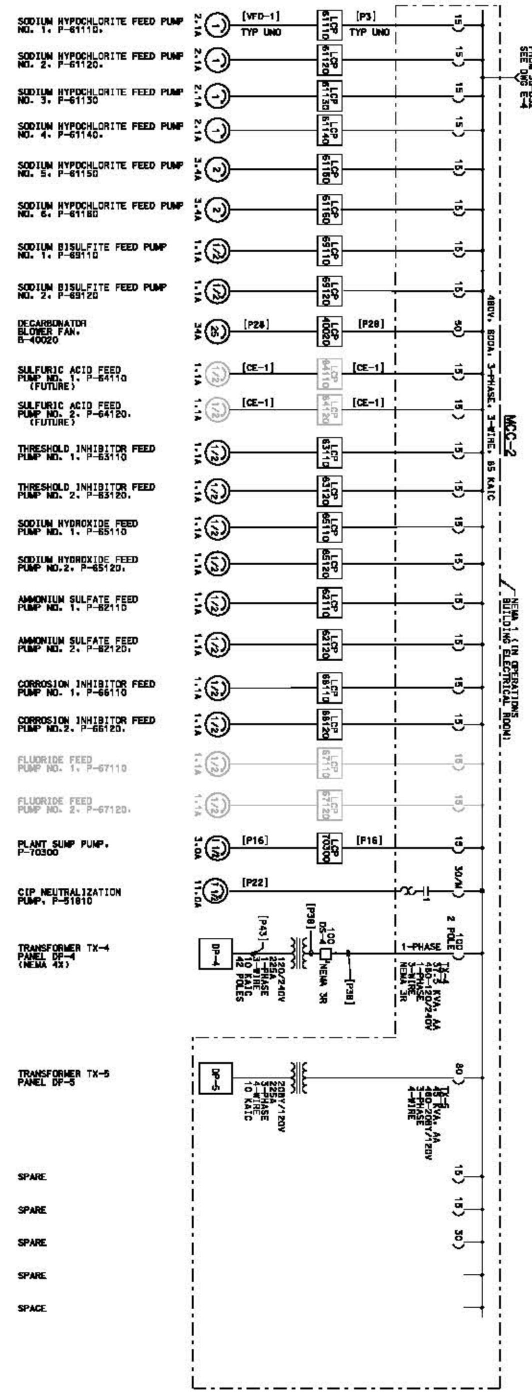

APPROVED BY:	
DIRECTOR OF ENGINEERING	DATE

EASTERN MUNICIPAL WATER DISTRICT

APPROVALS

CH2MHILL

DESIGNED BY: A MATHEWS
DRAWN BY: J HAUNER
CHECKED BY: R DENTON

EASTERN MUNICIPAL WATER DISTRICT
PERRIS II DESALINATION FACILITY
PERRIS, CALIFORNIA

ONE LINE DIAGRAM 3

SPEC. NO.: NOT APPLICABLE
CADD FILE NAME: PDFe603d.dgn

SYMBOL	DESCRIPTIONS	DATE	APPROVAL
	REVISIONS		

E-3

PRELIMINARY

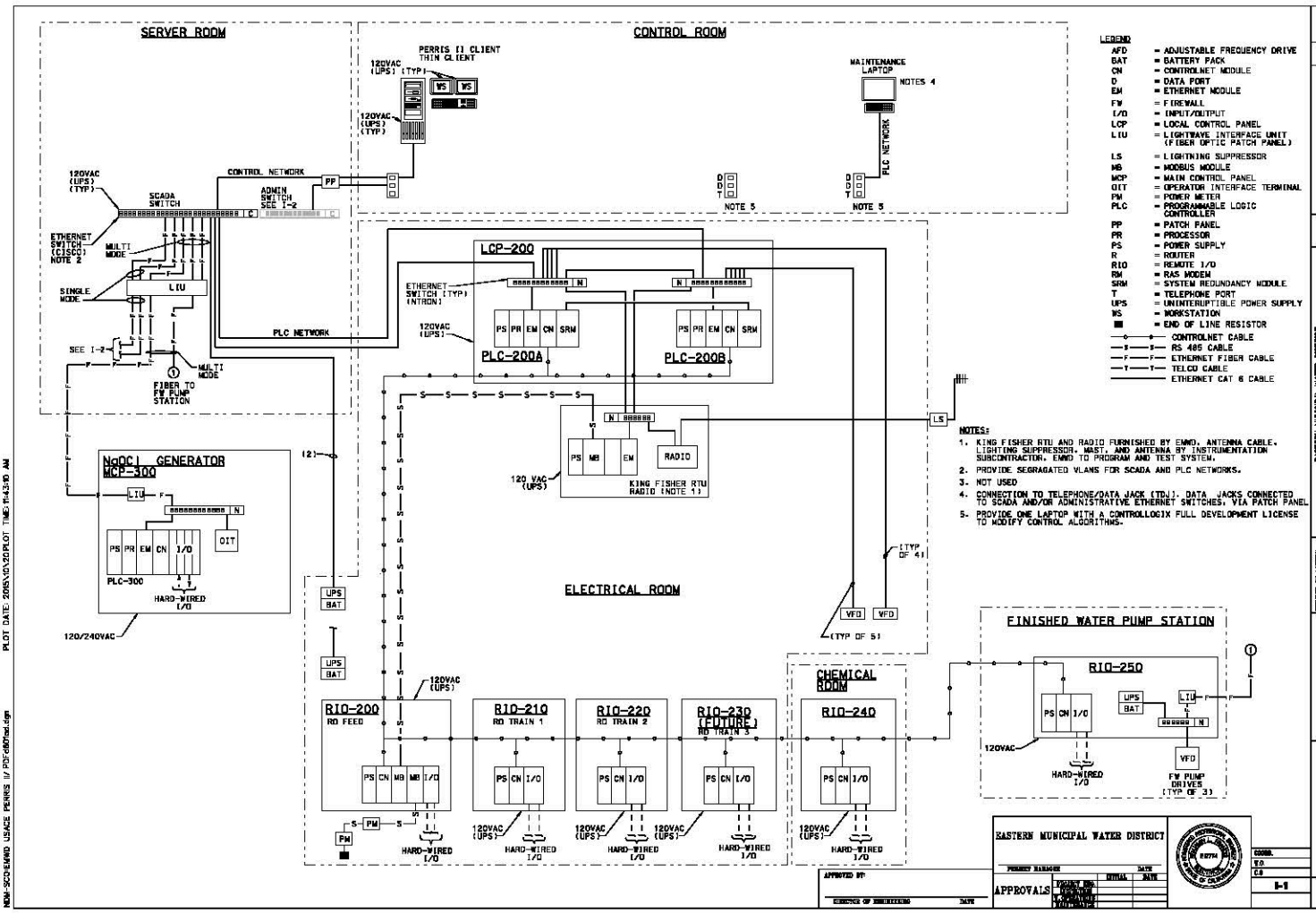
SERVER ROOM
CONTROL ROOM
PERRIS I CLIENT THIN CLIENT
120VAC (UPS) (TYP)
MAINTENANCE LAPTOP
NOTES 4
PLC NETWORK
NOTE 5
CONTROL NETWORK
ADMIN SWITCH SEE I-2
SCADA SWITCH
ETHERNET SWITCH (CISCO) NOTE 2
MULTI MODE
SINGLE MODE
LIU
SEE I-2
FIBER TO FW PUMP STATION
PLC NETWORK
LCP-200
ETHERNET SWITCH (TYP) (NTRON)
PLC-200A
PLC-200B
PS PR EM CN SRM
KING FISHER RTU RADIO (NOTE 1)
RADIO
120 VAC (UPS)
NaOCl GENERATOR MCP-300
PLC-300
OIT
HARD-WIRED I/O
120/240VAC
ELECTRICAL ROOM
UPS BAT
VFD
(TYP OF 4)
(TYP OF 5)
CHEMICAL ROOM
RIO-200 RO FEED
RIO-210 RO TRAIN 1
RIO-220 RO TRAIN 2
RIO-230 (FUTURE) RO TRAIN 3
RIO-240
FINISHED WATER PUMP STATION
RIO-250
FW PUMP DRIVES (TYP OF 3)
LEGEND
AFD = ADJUSTABLE FREQUENCY DRIVE
BAT = BATTERY PACK
CN = CONTROLNET MODULE
D = DATA PORT
EM = ETHERNET MODULE
FW = FIREWALL
I/O = INPUT/OUTPUT
LCP = LOCAL CONTROL PANEL
LIU = LIGHTWAVE INTERFACE UNIT (FIBER OPTIC PATCH PANEL)
LS = LIGHTNING SUPPRESSOR
MB = MODBUS MODULE
MCP = MAIN CONTROL PANEL
OIT = OPERATOR INTERFACE TERMINAL
PM = POWER METER
PLC = PROGRAMMABLE LOGIC CONTROLLER
PP = PATCH PANEL
PR = PROCESSOR
PS = POWER SUPPLY
R = ROUTER
RIO = REMOTE I/O
RM = RAS MODEM
SRM = SYSTEM REDUNDANCY MODULE
T = TELEPHONE PORT
UPS = UNINTERRUPTIBLE POWER SUPPLY
WS = WORKSTATION
= END OF LINE RESISTOR
CONTROLNET CABLE
RS 485 CABLE
ETHERNET FIBER CABLE
TELCO CABLE
ETHERNET CAT 6 CABLE
NOTES:
1. KING FISHER RTU AND RADIO FURNISHED BY EMWD. ANTENNA CABLE, LIGHTING SUPPRESSOR, MAST, AND ANTENNA BY INSTRUMENTATION SUBCONTRACTOR. EMWD TO PROGRAM AND TEST SYSTEM.
2. PROVIDE SEGRAGATED VLANS FOR SCADA AND PLC NETWORKS.
3. NOT USED
4. CONNECTION TO TELEPHONE/DATA JACK (TDJ). DATA JACKS CONNECTED TO SCADA AND/OR ADMINISTRATIVE ETHERNET SWITCHES. VIA PATCH PANEL
5. PROVIDE ONE LAPTOP WITH A CONTROLLOGIX FULL DEVELOPMENT LICENSE TO MODIFY CONTROL ALGORITHMS.
EASTERN MUNICIPAL WATER DISTRICT
PERRIS II DESALINATION FACILITY
PERRIS, CALIFORNIA
SCADA BLOCK DIAGRAM 1
CH2MHILL
EASTERN MUNICIPAL WATER DISTRICT
APPROVALS
I-1
PRELIMINARY

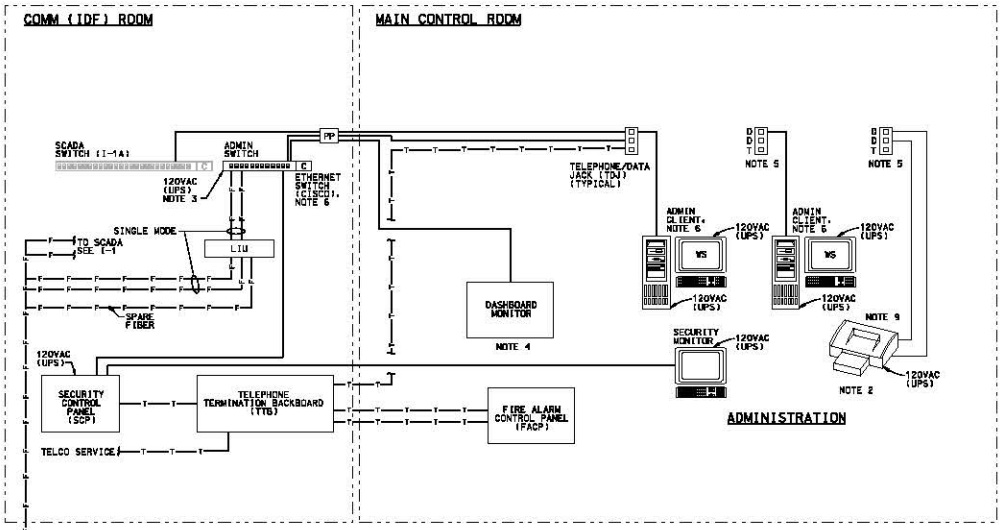

12-PAIR SINGLE MODE FIBER OPTIC CABLE

LIU

TERMINATE AT NEW PATCH PANEL IN EXISTING RACK AT PERRIS I/MENIFEE DESALTERS FOR CONNECTION TO EXISTING SPARE FIBER

SCADA RACK
MONITOR
KVM
SCADA SERVER 1
SCADA SERVER 2
HIS SERVER
SCADA SWITCH
FIREWALL
RM

ADMIN RACK
LIU
PP
ADMIN SWITCH
NOTE 6

LEGEND

BAT	= BATTERY PACK
CN	= CONTROLNET MODULE
D	= DATA PORT
EM	= ETHERNET MODULE
FW	= FIREWALL
I/O	= INPUT/OUTPUT
IDF	= INTERNAL DATA FACILITY
KVM	= SWITCH TO ENABLE CONTROL OF MULTIPLE COMPUTERS FROM A SINGLE SVM STATION
LCP	= LOCAL CONTROL PANEL
LIU	= LIGHTWAVE INTERFACE UNIT (FIBER OPTIC PATCH PANEL)
LS	= LIGHTNING SUPPRESSOR
MB	= MODBUS MODULE
MCP	= MAIN CONTROL PANEL
OIT	= OPERATOR INTERFACE TERMINAL
PM	= POWER METER
PLC	= PROGRAMMABLE LOGIC CONTROLLER
PP	= PATCH PANEL
PR	= PROCESSOR
PS	= POWER SUPPLY
R	= ROUTER
RIO	= REMOTE I/O
RM	= RAS MODEM
SRM	= SYSTEM REDUNDANCY MODULE
T	= TELEPHONE PORT
UPS	= UNINTERUPTIBLE POWER SUPPLY
VFD	= VARIABLE FREQUENCY DRIVE
WS	= WORKSTATION
■	= END OF LINE RESISTOR
—o—o—	CONTROLNET CABLE
—S—S—	RS 485 CABLE
—F—F—	ETHERNET FIBER CABLE
—T—T—	TELCO CABLE
———	ETHERNET CAT 6 CABLE

NOTES:

1. NOT USED
2. ALL IN ONE, XEROX, FAX, SCANNER, AND PRINTER TO BE SUPPLIED BY EMWD IS DEPARTMENT.
3. UPS LOCATED IN OPERATIONS BUILDING ELECTRICAL ROOM.
4. DASHBOARD MONITOR LOCATED IN OPERATIONS BLDG CONFERENCE ROOM.
5. CONNECTION TO TELEPHONE/DATA JACK (TDJ). DATA JACKS CONNECTED TO SCADA AND/OR ADMINISTRATIVE ETHERNET SWITCHES, VIA PATCH PANEL.
6. ADMIN SWITCH AND ADMIN CLIENTS SUPPLIED BY EMWD.
7. NOT USED
8. NOT USED
9. THE OUTPUT DEVICES SHALL BE PROVIDED WITH DUAL (2) NETWORK CARDS FOR CONNECTION TO SCADA AND ADMINISTRATION SERVERS.

APPROVED BY:

CHIEF OF ENGINEERING DATE

EASTERN MUNICIPAL WATER DISTRICT

PROJECT MANAGER DATE

APPROVALS

	INITIAL	DATE
PROJECT ENG.		
ELECTRICAL		
INSTRUMENTATION		
MECHANICAL		

CONSTR.
YO
CO

E-2

SYMBOL	DESCRIPTION	DATE	APPROVAL
	REVISIONS		

EASTERN MUNICIPAL WATER DISTRICT
PERRIS II DESALINATION FACILITY
PERRIS, CALIFORNIA

SCADA BLOCK DIAGRAM 2

CH2MHILL

PRELIMINARY

PLOT DATE: 2006\10\15 PLOT TIME: 3:36:28 PM

NEW-SCD-EMWD USACE PERRIS II PDF\6807fsd.dgn

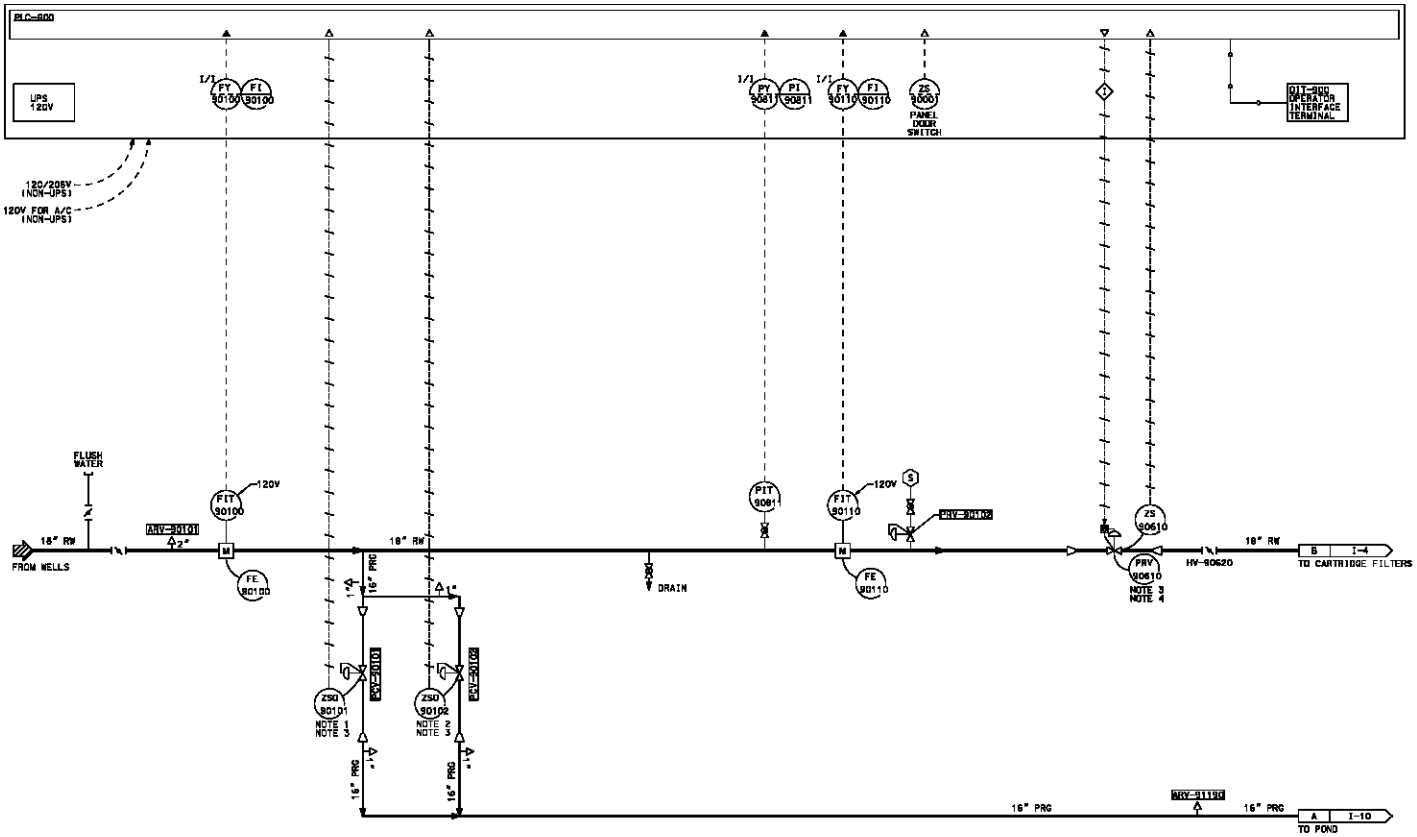

NOTES:

1. SET PCV TO HOLD UPSTREAM PRESSURE TO 60 PSI.
2. SET PCV TO HOLD UPSTREAM PRESSURE TO 65 PSI.
3. NOT USED.
4. HYDRAULICALLY CONTROLLED GLOBE VALVE TO MAINTAIN DOWNSTREAM PRESSURE AT 55 PSI W/ SOLENOID OVER-RIDE FOR VALVE CLOSURE.

APPROVED BY:

DIRECTOR OF ENGINEERING DATE

EASTERN MUNICIPAL WATER DISTRICT

PROJECT MANAGER DATE

APPROVALS

	INITIAL	DATE
PROJECT ENG.		
ELECTRICAL		
INSTRUMENTATION		
MECHANICAL		

CONTROL SYSTEM INTEGRATOR

SCALE: NONE

DWG. NO. 1

SHEET 8

EASTERN MUNICIPAL WATER DISTRICT
PERRIS II DESALINATION FACILITY
PERRIS, CALIFORNIA

RAW WATER

SYMBOL	DESCRIPTION	DATE	APPROVAL
	REVISIONS		

CH2MHILL

PRELIMINARY

PLOT DATE: 2/26/01 PLOT TIME: 12:57:37 PM

NEW-SCADA-WND USACE PERRIS W PDF-8802d.dgn

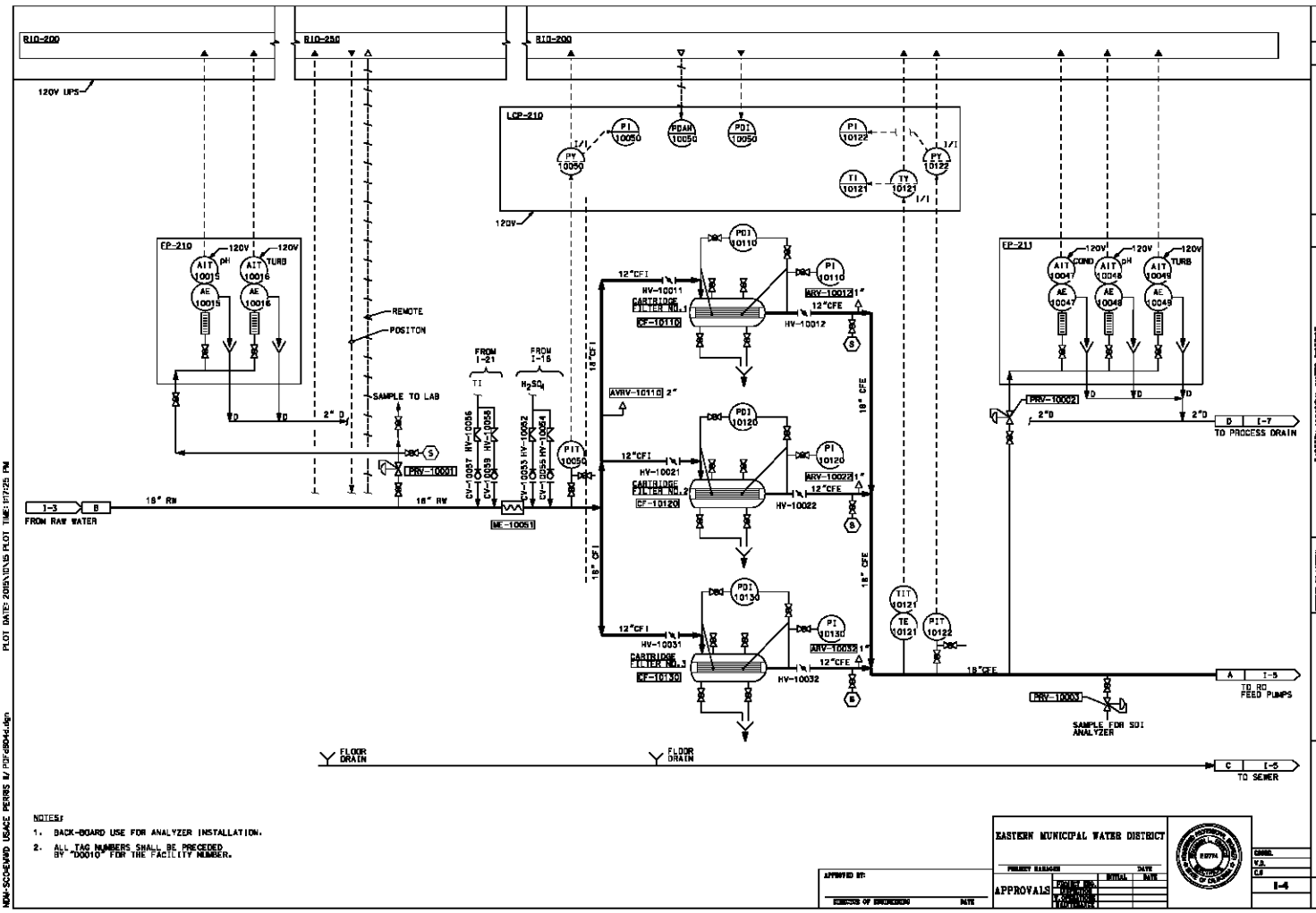
RIO-200
RIO-250
RIO-200
120V UPS
LCP-210
PI 10050
PDAH 10050
PDI 10050
PY 10050
PI 10122
TI 10121
TY 10123
PY 10122
EP-210
AIT 10015
AIT 10016
AE 10015
AE 10016
120V
pH
TURB
REMOTE
POSITON
SAMPLE TO LAB
PRV-10001
2" D
FROM I-21
FROM I-16
TI
H_2SO_4
HV-10056
HV-10058
HV-10062
HV-10064
CV-10057
CV-10059
CV-10063
CV-10065
PIT 10050
ME-10051
16" RW
I-3
B
FROM RAW WATER
12"CFI
HV-10011
CARTRIDGE FILTER NO.1
CF-10110
PDI 10110
PI 10110
ARV-10012
12"CFE
HV-10012
AVRV-10110
2"
HV-10021
CARTRIDGE FILTER NO.2
CF-10120
PDI 10120
PI 10120
ARV-10022
HV-10022
HV-10031
CARTRIDGE FILTER NO.3
CF-10130
PDI 10130
PI 10130
ARV-10032
HV-10032
18" CFI
18" CFE
TIT 10121
TE 10121
PIT 10122
EP-211
AIT 10047
AIT 10048
AIT 10049
AE 10047
AE 10048
AE 10049
COND
PRV-10002
D
I-7
TO PROCESS DRAIN
A
I-5
TO RO FEED PUMPS
PRV-10003
SAMPLE FOR SDI ANALYZER
FLOOR DRAIN
C
I-5
TO SEWER
EASTERN MUNICIPAL WATER DISTRICT
PERRIS II DESALINATION FACILITY
PERRIS, CALIFORNIA
RAW WATER
BLENDING/FILTERING
CH2MHILL
PRELIMINARY
NOTES:
1. BACK-BOARD USE FOR ANALYZER INSTALLATION.
2. ALL TAG NUMBERS SHALL BE PRECEDED BY "D0010" FOR THE FACILITY NUMBER.
APPROVED BY:
DIRECTOR OF ENGINEERING
DATE
EASTERN MUNICIPAL WATER DISTRICT
PROJECT MANAGER
DATE
APPROVALS
DRAWN
CHECKED
APPROVED
I-4
REVISIONS
DESCRIPTION
SYMBOL
DATE
APPROVAL
PLOT DATE: 2/05/01 10:15 PLOT TIME: 17:17:25 PM
NOW-SCO-EWMD USACE PERRIS II / PDF-d80x44.dgn

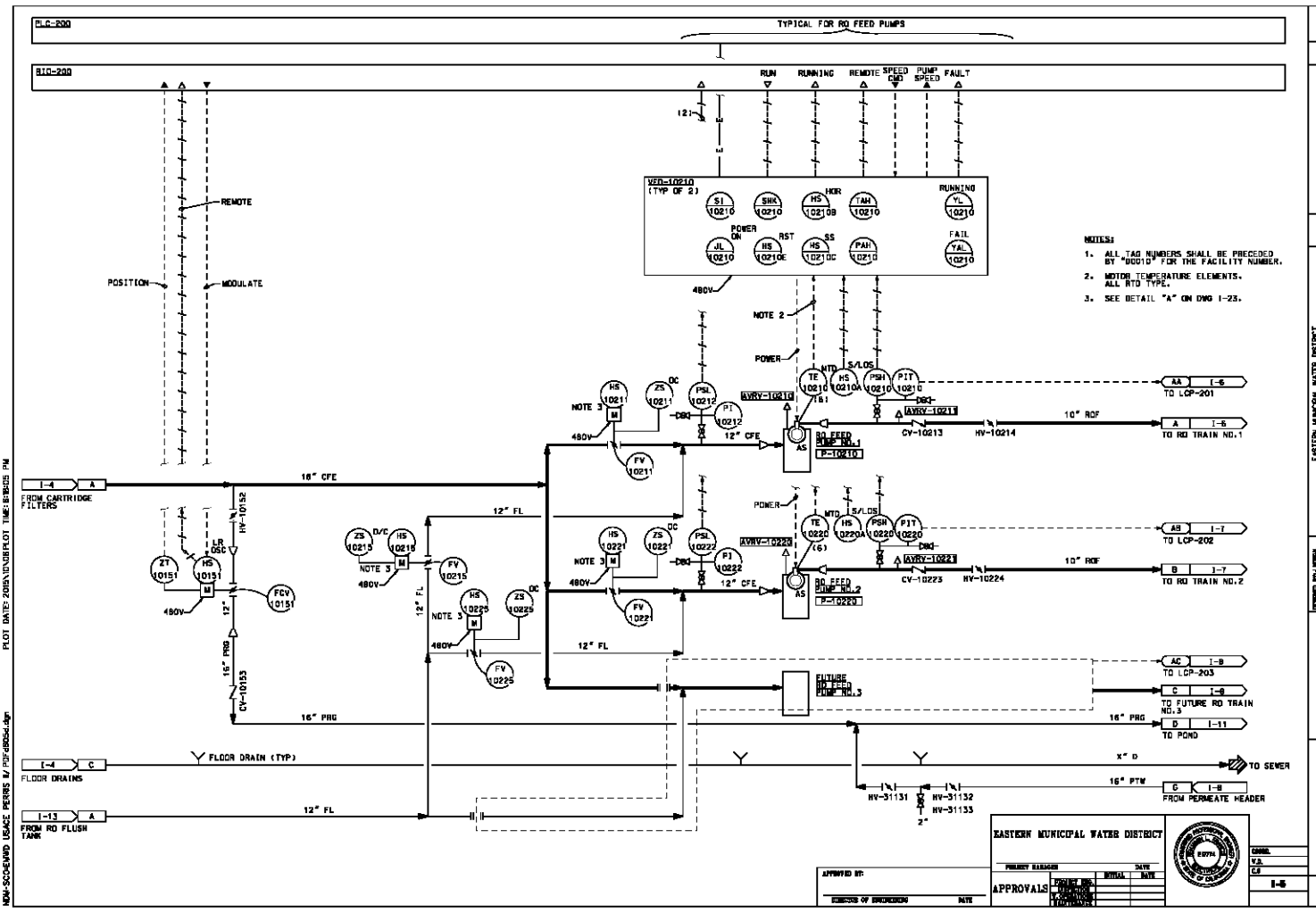
PLC-200
TYPICAL FOR RO FEED PUMPS
BIO-200
RUN
RUNNING
REMOTE
SPEED CMD
PUMP SPEED
FAULT
VFD-10210 (TYP OF 2)
SI 10210
SNA 10210
HS 10210B
HOR
TAH 10210
RUNNING
YL 10210
POWER ON
JL 10210
HS 10210E
RST
HS 10210C
SS
PAH 10210
FAIL
YAL 10210
480V
REMOTE
POSITION
MODULATE
NOTES:
1. ALL TAG NUMBERS SHALL BE PRECEDED BY "00010" FOR THE FACILITY NUMBER.
2. MOTOR TEMPERATURE ELEMENTS. ALL RTD TYPE.
3. SEE DETAIL "A" ON DWG I-23.
NOTE 2
POWER
TE 10210 (6)
RTD
HS 10210A
S/LOS
PSH 10210
PIT 10210
AVRV-10210
AVRV-10211
AA I-6
TO LCP-201
A I-6
TO RO TRAIN NO.1
10" ROF
CV-10213
HV-10214
12" CFE
RO FEED PUMP NO.1
P-10210
AS
HS 10211
ZS 10211
OC
PSL 10212
PI 10212
NOTE 3
M
FV 10211
I-4 A
FROM CARTRIDGE FILTERS
16" CFE
HV-10152
ZT 10151
HS 10151
LS
OCC
FCV 10151
12"
16" PRG
CV-10153
16" PRG
12" FL
ZS 10213
D/C
HS 10213
FV 10215
HS 10225
ZS 10225
FV 10225
POWER
TE 10220 (6)
HS 10220A
PSH 10220
PIT 10220
AVRV-10220
AVRV-10221
AB I-7
TO LCP-202
B I-7
TO RO TRAIN NO.2
10" ROF
CV-10223
HV-10224
RO FEED PUMP NO.2
P-10220
HS 10221
ZS 10221
PSL 10222
PI 10222
FV 10221
FUTURE RO FEED PUMP NO.3
AC I-9
TO LCP-203
C I-9
TO FUTURE RO TRAIN NO.3
D I-11
TO POND
I-4 C
FLOOR DRAINS
FLOOR DRAIN (TYP)
X" D
TO SEWER
16" PTW
G I-8
FROM PERMEATE HEADER
HV-31131
HV-31132
HV-31133
2"
I-13 A
FROM RO FLUSH TANK
12" FL
EASTERN MUNICIPAL WATER DISTRICT
PERRIS II DESALINATION FACILITY
PERRIS, CALIFORNIA
RO FEED PUMPS
REVISIONS
DESCRIPTION
DWG
APPROVAL
APPROVED BY:
DIRECTOR OF ENGINEERING
DATE
EASTERN MUNICIPAL WATER DISTRICT
PROJECT MANAGER
DATE
APPROVALS
DESIGN ENG.
ELECTRICAL
MECHANICAL
INSTRUMENTATION
INITIAL
DATE
CH2MHILL
PRELIMINARY
I-5
PLOT DATE: 2/08/01 \D\USERS\D\USERS PM
NOW-SCO-SEWRD USACE PERRIS W/ PDF\d0005d.dgn

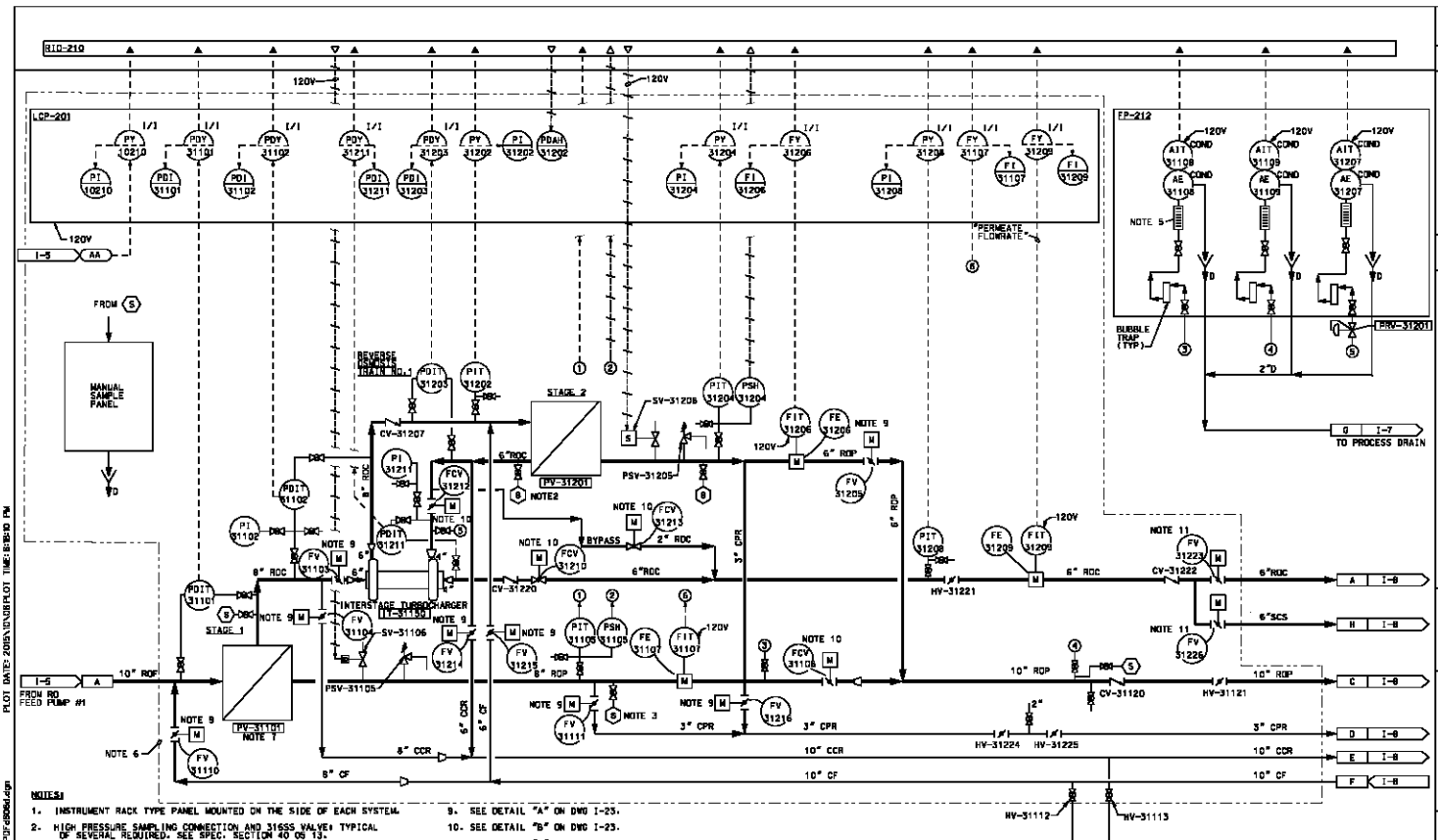
RIO-210
LCP-201
FP-212
MANUAL SAMPLE PANEL
FROM RO FEED PUMP #1
STAGE 1
STAGE 2
INTERSTAGE TURBOCHARGER
PV-31101
PV-31201
BYPASS
PERMEATE FLOWRATE
BUBBLE TRAP (TYP)
TO PROCESS DRAIN
LOW POINT DRAINS
NOTES:
1. INSTRUMENT RACK TYPE PANEL MOUNTED ON THE SIDE OF EACH SYSTEM.
2. HIGH PRESSURE SAMPLING CONNECTION AND 316SS VALVE; TYPICAL OF SEVERAL REQUIRED. SEE SPEC. SECTION 40 05 13.
3. LOW PRESSURE SAMPLING CONNECTION AND VALVE, TYPICAL OF SEVERAL REQUIRED. SEE SPEC SECTION 40 05 13.
4. ALL PROCESS EQUIPMENT AND PIPING ON THIS SHEET SHALL BE PROVIDED BY MEMBRANE SYSTEM SUPPLIER (ROEM).
5. PROVIDE ROTAMETERS ON SAMPLE LINES.
6. ROEM SHALL PROVIDE ALL STRUCTURAL, AND MECHANICAL SYSTEMS WITHIN THE DASHED BOUNDARY.
7. TYPICAL FOR 24 PV'S. PV-31101 THROUGH PV-31124 FOR STAGE 1 & TYPICAL FOR 12 PV'S. PV-31201 THROUGH PV-31212 FOR STAGE 2.
8. ALL TAG NUMBERS SHALL BE PRECEDED BY "D0010" FOR THE FACILITY NUMBER.
9. SEE DETAIL "A" ON DWG I-23.
10. SEE DETAIL "B" ON DWG I-23.
11. SEE DETAIL "A" ON DWG I-23, EXCEPT WIRING CONNECTIONS AT RIO PANEL SHALL NOT BE TERMINATED.
EASTERN MUNICIPAL WATER DISTRICT
APPROVALS
EASTERN MUNICIPAL WATER DISTRICT
PERRIS II DESALINATION FACILITY
PERRIS, CALIFORNIA
RO MEMBRANE
TRAIN 1
CH2MHILL
PRELIMINARY

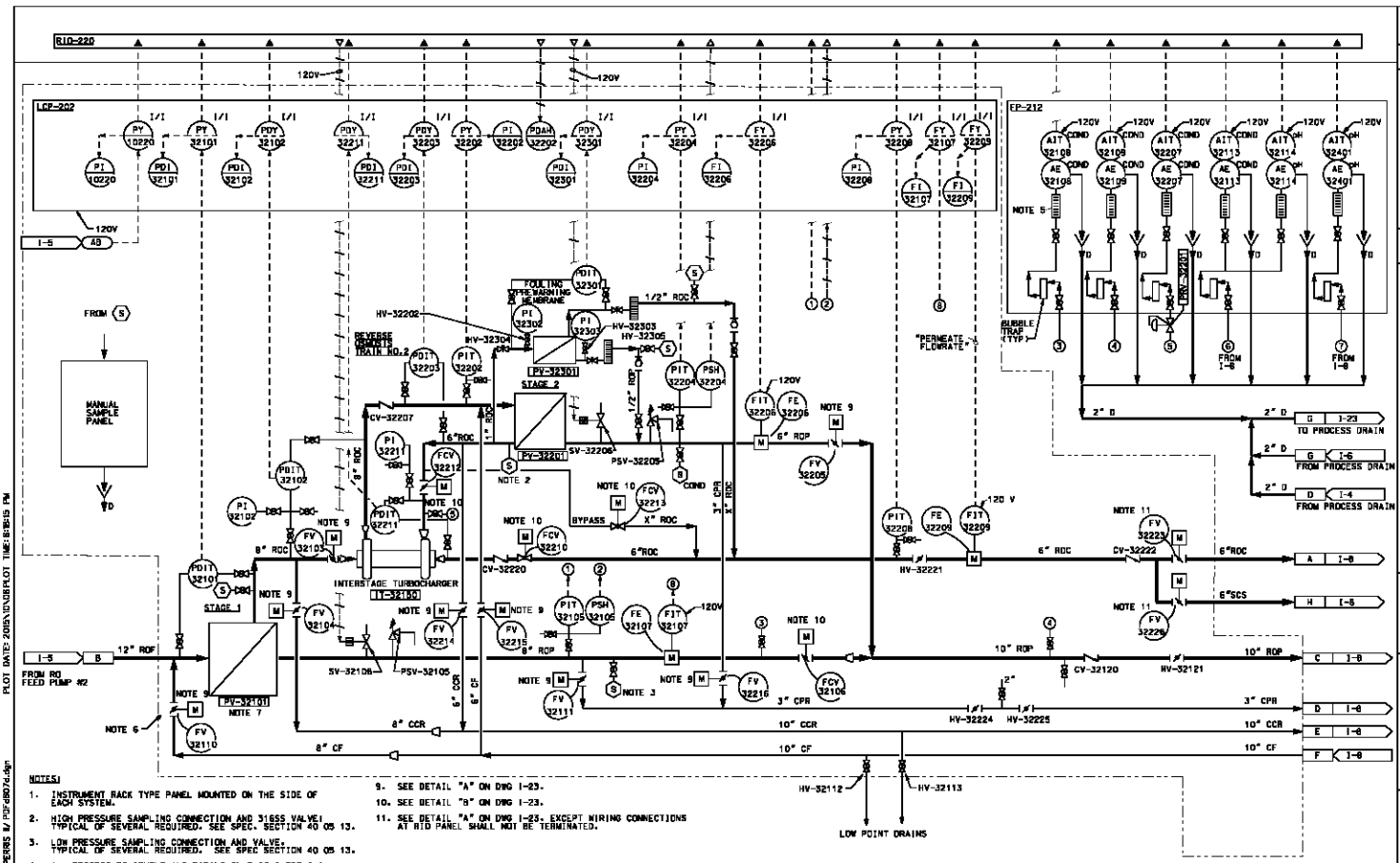

NOTES:

1. INSTRUMENT RACK TYPE PANEL MOUNTED ON THE SIDE OF EACH SYSTEM.
2. HIGH PRESSURE SAMPLING CONNECTION AND 316SS VALVE. TYPICAL OF SEVERAL REQUIRED. SEE SPEC. SECTION 40 05 13.
3. LOW PRESSURE SAMPLING CONNECTION AND VALVE. TYPICAL OF SEVERAL REQUIRED. SEE SPEC SECTION 40 05 13.
4. ALL PROCESS EQUIPMENT AND PIPING ON THIS SHEET SHALL BE PROVIDED BY MEMBRANE SYSTEM SUPPLIER (ROEMI).
5. PROVIDE ROTAMETERS ON SAMPLE LINES.
6. ROEMI SHALL PROVIDE ALL STRUCTURAL, AND MECHANICAL SYSTEMS WITHIN THE DASHED BOUNDARY.
7. TYPICAL FOR 24 PV'S; PV-32101 THROUGH PV-32124 FOR STAGE 1 & TYPICAL FOR 12 PV'S. PV-32201 THROUGH PV-32212 FOR STAGE 2.
8. ALL TAG NUMBERS SHALL BE PRECEDED BY "00010" FOR THE FACILITY NUMBER.
9. SEE DETAIL "A" ON DWG I-23.
10. SEE DETAIL "B" ON DWG I-23.
11. SEE DETAIL "A" ON DWG I-23. EXCEPT WIRING CONNECTIONS AT RIO PANEL SHALL NOT BE TERMINATED.

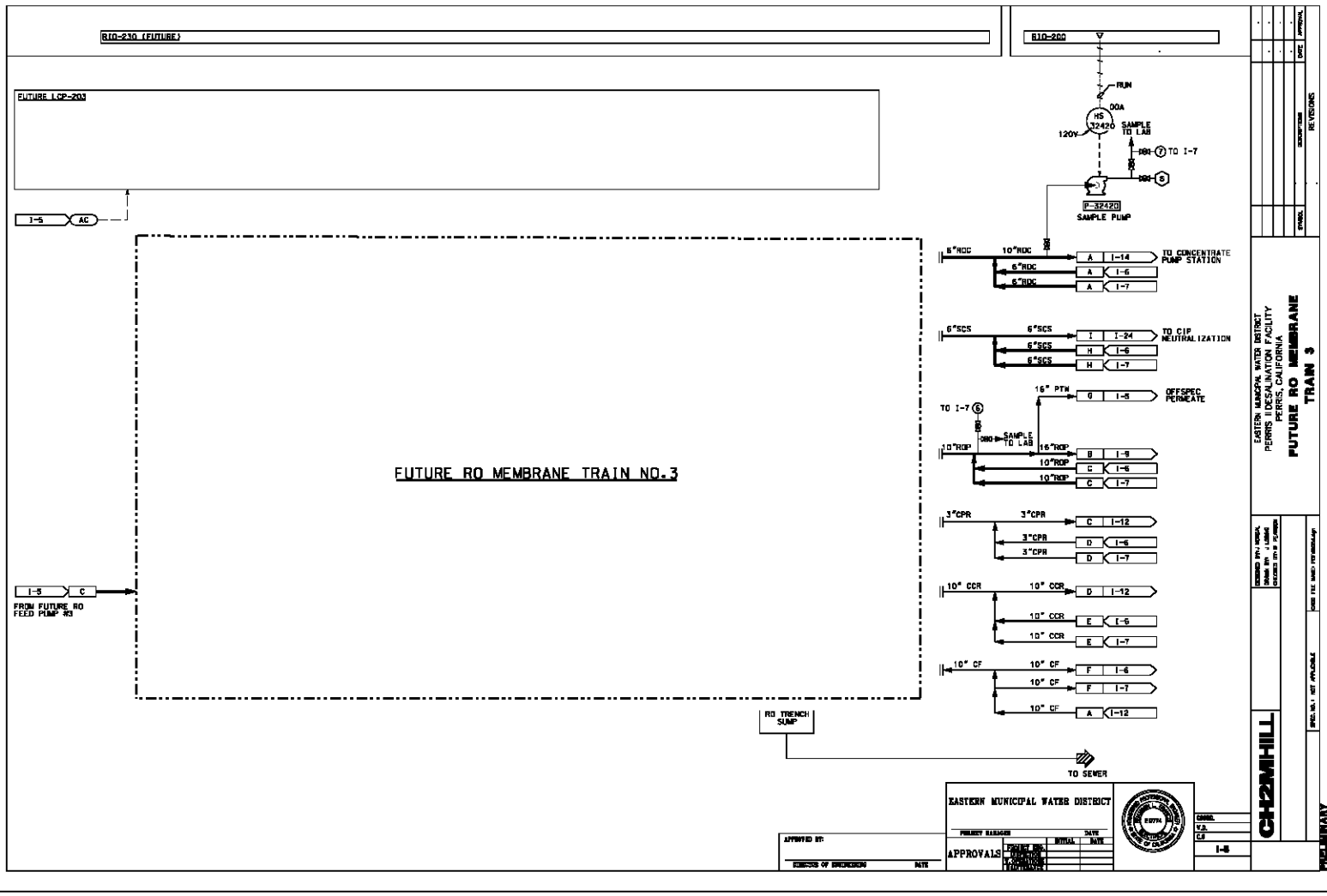
RIO-230 (FUTURE)
RIO-200
FUTURE LCP-203
I-5 AC
FUTURE RO MEMBRANE TRAIN NO.3
I-5 C
FROM FUTURE RO FEED PUMP #3
RUN
DOA
HS 32420
120V
SAMPLE TO LAB
TO I-7
P-32420
SAMPLE PUMP
6"RDC
10"RDC
TO CONCENTRATE PUMP STATION
6"SCS
TO CIP NEUTRALIZATION
16" PTM
OFFSPEC PERMEATE
10"ROP
16"ROP
3"CPR
10" CCR
10" CF
RO TRENCH SUMP
TO SEWER
EASTERN MUNICIPAL WATER DISTRICT
APPROVALS
PRELIMINARY
EASTERN MUNICIPAL WATER DISTRICT
PERRIS II DESALINATION FACILITY
PERRIS, CALIFORNIA
FUTURE RO MEMBRANE TRAIN 3
CH2MHILL
REVISIONS

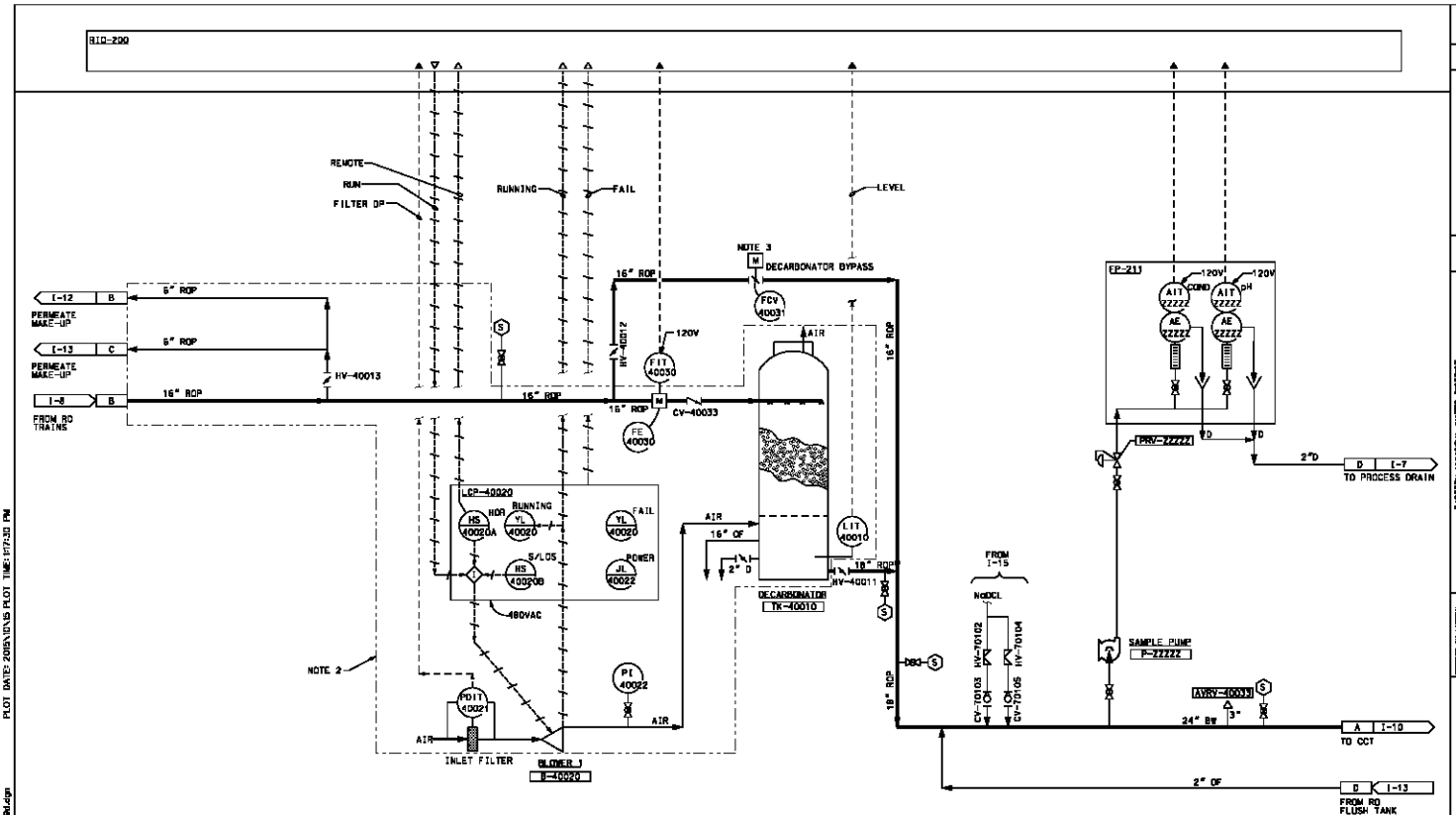

NOTES:

1. ALL TAG NUMBERS SHALL BE PRECEDED BY "00010" FOR THE FACILITY NUMBER.
2. RDEW SHALL PROVIDE EQUIPMENT, PIPING, VALVES AND APPURTENANCES WITHIN DASHED BOUNDARY.
3. SEE DETAIL "B" ON DWG I-23.

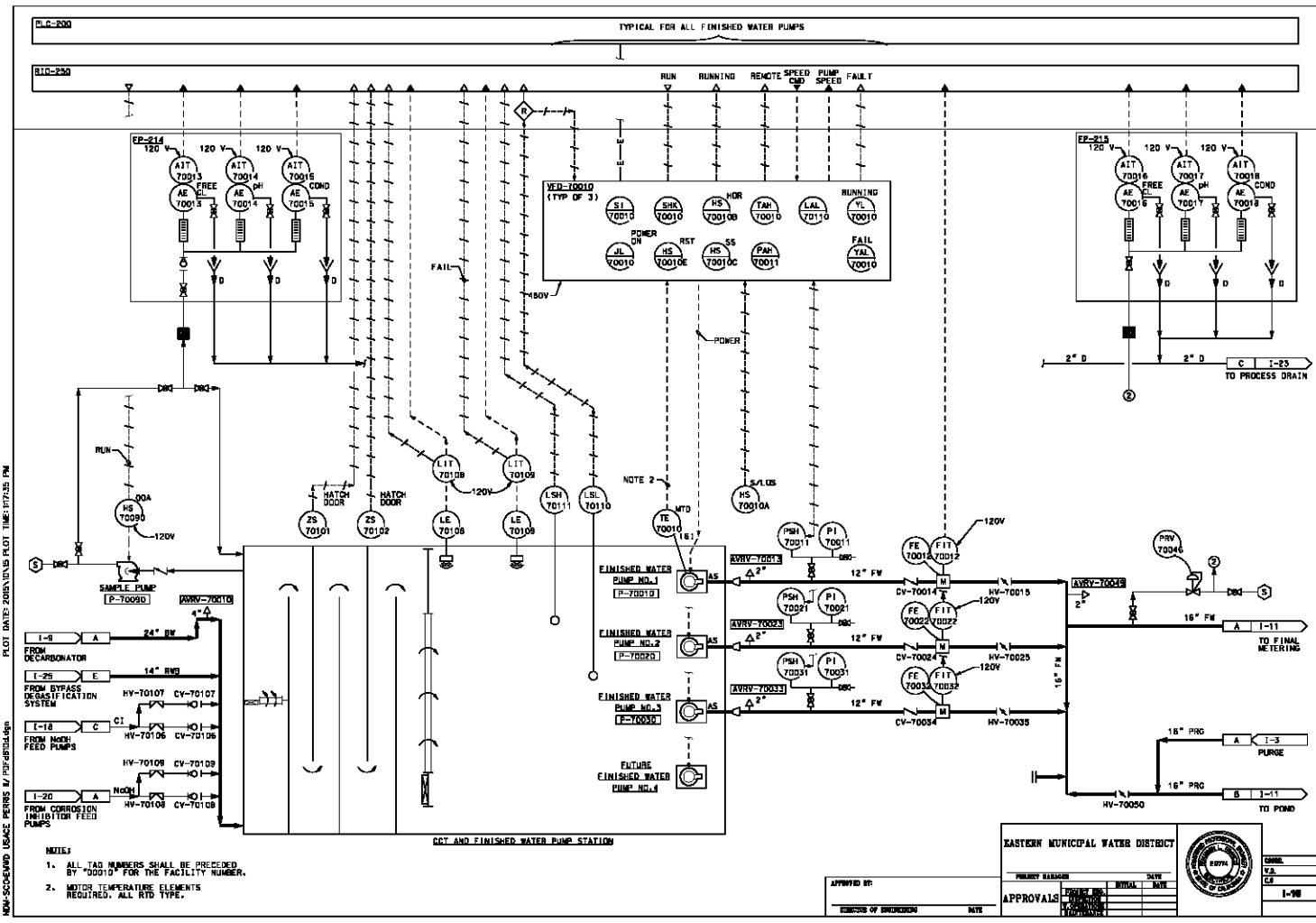
PLC-200
TYPICAL FOR ALL FINISHED WATER PUMPS
RIO-250
RUN
RUNNING
REMOTE
SPEED CMD
PUMP SPEED
FAULT
FP-214
120 V
AIT 70013
AE 70013
FREE CL
AIT 70014
AE 70014
pH
AIT 70015
AE 70015
COND
FP-215
AIT 70016
AE 70016
AIT 70017
AE 70017
AIT 70018
AE 70018
VFD-70010 (TYP OF 3)
SI 70010
SHK 70010
HS 70010B
HOR
TAH 70010
LAL 70110
YL 70010
RUNNING
POWER ON
JL 70010
HS 70010E
RST
HS 70010C
SS
PAH 70011
FAIL
YAL 70010
FAIL
480V
POWER
2" D
TO PROCESS DRAIN
I-23
RUN
HS 70090
120V
SAMPLE PUMP
P-70090
HATCH DOOR
ZS 70101
ZS 70102
LIT 70109
LIT 70109
120V
LE 70108
LE 70108
LSH 70111
LSL 70110
NOTE 2
TE 70010
MTD
S/LOS
HS 70010A
PSH 70011
PI 70011
FE 70012
FIT 70012
120V
AVRV-70013
12" FW
CV-70014
HV-70015
AVRV-70016
PRV 70046
16" FW
I-11
TO FINAL METERING
FINISHED WATER PUMP NO.1
P-70010
AS
PSH 70021
PI 70021
FE 70022
FIT 70022
120V
AVRV-70023
12" FW
CV-70024
HV-70025
FINISHED WATER PUMP NO.2
P-70020
PSH 70031
PI 70031
FE 70032
FIT 70032
120V
AVRV-70033
12" FW
CV-70034
HV-70035
FINISHED WATER PUMP NO.3
P-70030
FUTURE FINISHED WATER PUMP NO.4
16" FW
16" PRG
I-3
PURGE
16" PRG
HV-70050
I-11
TO POND
I-6
24" BW
FROM DECARBONATOR
I-25
14" RWS
FROM BYPASS DEGASIFICATION SYSTEM
HV-70107
CV-70107
I-18
CI
FROM NaOH FEED PUMPS
HV-70106
CV-70106
HV-70109
CV-70109
I-20
NaOH
FROM CORROSION INHIBITOR FEED PUMPS
HV-70108
CV-70108
AVRV-70010
4"
CCT AND FINISHED WATER PUMP STATION
NOTES:
1. ALL TAG NUMBERS SHALL BE PRECEDED BY "00010" FOR THE FACILITY NUMBER.
2. MOTOR TEMPERATURE ELEMENTS REQUIRED. ALL RTD TYPE.
APPROVED BY:
DIRECTOR OF ENGINEERING
DATE
EASTERN MUNICIPAL WATER DISTRICT
PROJECT MANAGER
DATE
APPROVALS
INITIAL
DATE
I-10
REVISIONS
DESCRIPTION
SYMBOL
DATE
APPROVAL
EASTERN MUNICIPAL WATER DISTRICT
PERRIS II DESALINATION FACILITY
PERRIS, CALIFORNIA
CLEARWELL AND FINISHED WATER PUMP STATION
CH2MHILL
PRELIMINARY
PLOT DATE: 2/05/01 PLOT TIME: 1:17:35 PM
NOW-SCOTEWRD USACE PERRIS W/ PDF-d5T04.dgn

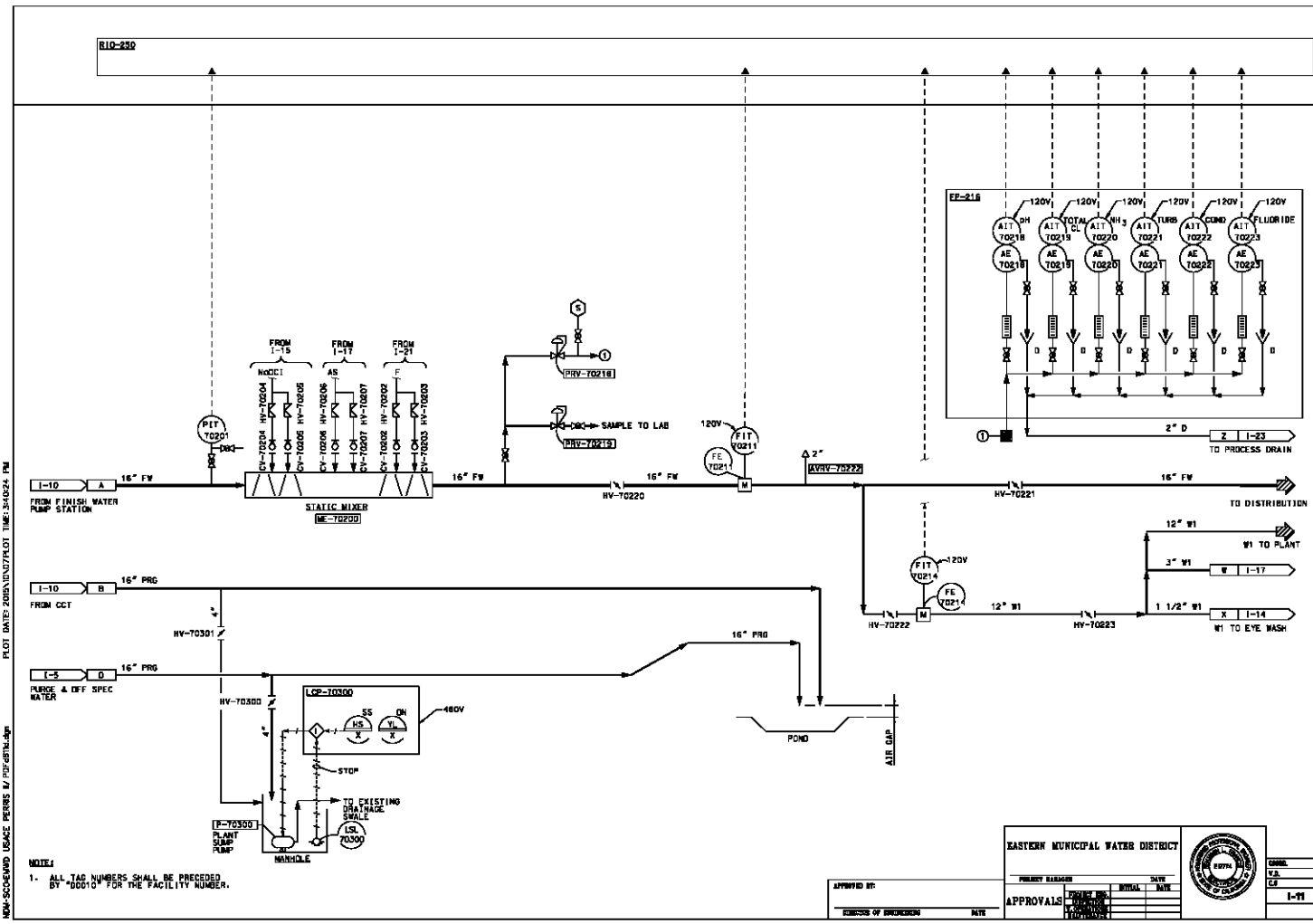
RIO-250
FROM I-15
FROM I-17
FROM I-21
NaOCl
AS
F
CV-70204
HV-70204
HV-70205
CV-70205
CV-70206
HV-70206
HV-70206
CV-70207
HV-70207
CV-70202
HV-70202
HV-70203
CV-70203
PIT 70201
I-10
A
FROM FINISH WATER PUMP STATION
16" FW
STATIC MIXER
ME-70200
PRV-70218
SAMPLE TO LAB
PRV-70219
120V
FIT 70211
FE 7021
HV-70220
2"
AVRV-70222
HV-70221
TO DISTRICTION
EP-216
AIT 70218
AE 70218
AIT 70219
AE 70219
AIT 70220
AE 70220
AIT 70221
AE 70221
AIT 70222
AE 70222
AIT 70223
AE 70223
OH
TOTAL CL
NH3
TURB
COND
FLUORIDE
2" D
Z
I-23
TO PROCESS DRAIN
FIT 70214
FE 7021
HV-70222
12" W1
HV-70223
12" W1
W1 TO PLANT
3" W1
W
I-17
1 1/2" W1
X
I-14
W1 TO EYE WASH
I-10
B
FROM CCT
16" PRG
HV-70301
I-5
D
PURGE & OFF SPEC WATER
HV-70300
LCP-70300
SS
ON
HS
VL
X
480V
STOP
TO EXISTING DRAINAGE SWALE
P-70300
PLANT SUMP PUMP
LSL 70300
MANHOLE
POND
AIR GAP
NOTE:
1- ALL TAG NUMBERS SHALL BE PRECEDED BY "00010" FOR THE FACILITY NUMBER.
EASTERN MUNICIPAL WATER DISTRICT
PROJECT MANAGER
DATE
APPROVALS
INITIAL
DATE
APPROVED BY:
DIRECTOR OF ENGINEERING
DATE
I-11
EMWD
V.A.
C.S.
EASTERN MUNICIPAL WATER DISTRICT
PERRIS II DESALINATION FACILITY
PERRIS, CALIFORNIA
FINAL METERING
REVISIONS
DATE
APPROVAL
DESCRIPTION
SYMBOL
CH2MHILL
PRELIMINARY
PLOT DATE: 2/08/01 TIME: 3:40:24 PM

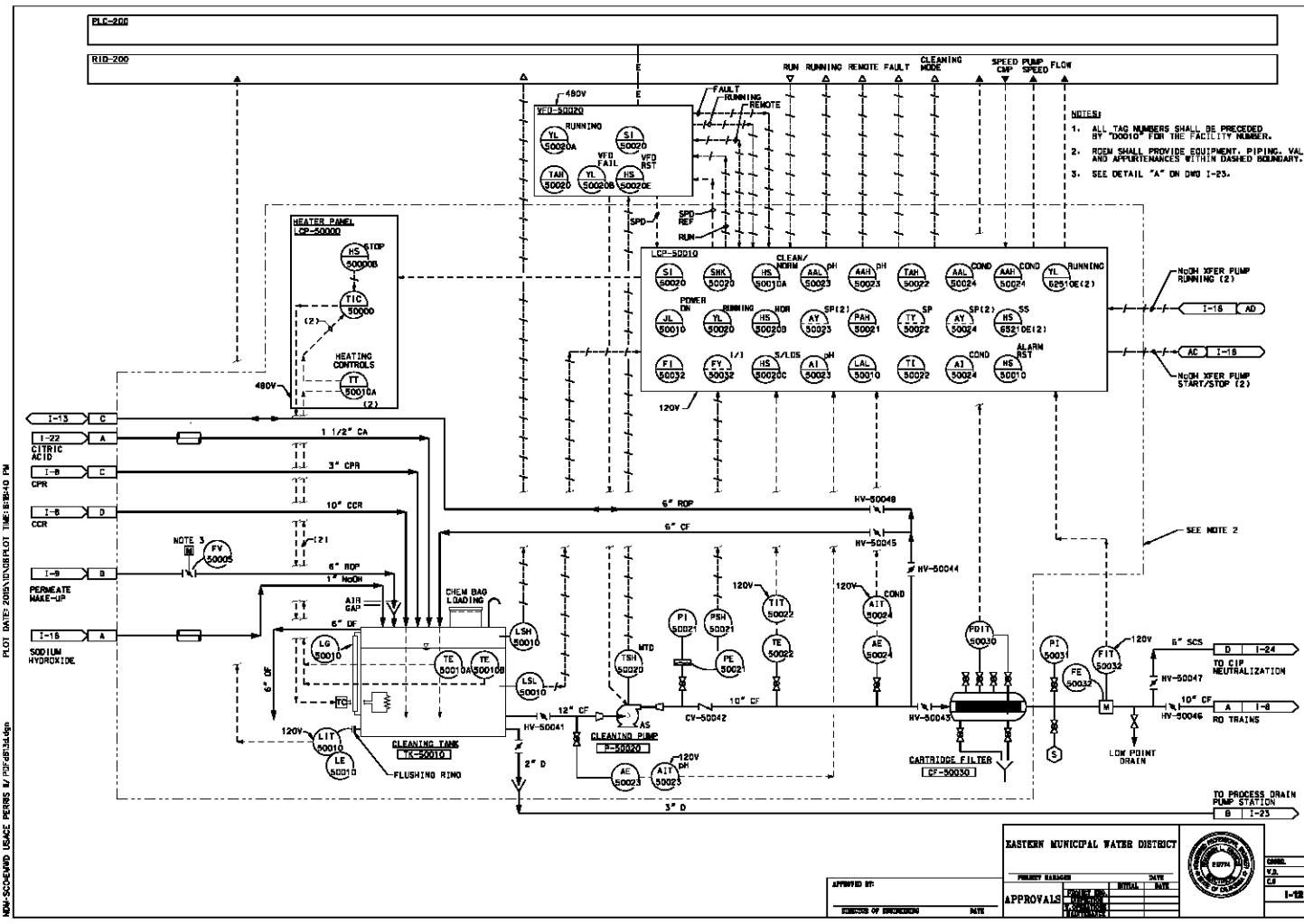
PLC-200
RID-200
RUN RUNNING REMOTE FAULT CLEANING MODE SPEED CMP PUMP SPEED FLOW
VFD-50020
480V
RUNNING
VFD FAIL
VFD RST
FAULT
RUNNING
REMOTE
SPD
SPD REF
RUN
HEATER PANEL
LCP-50000
HS 50000B STOP
TIC 50000
HEATING CONTROLS
TT 50010A
480V
LCP-50010
120V
NOTES:
1. ALL TAG NUMBERS SHALL BE PRECEDED BY "D0010" FOR THE FACILITY NUMBER.
2. RGEM SHALL PROVIDE EQUIPMENT, PIPING, VALVES AND APPURTENANCES WITHIN DASHED BOUNDARY.
3. SEE DETAIL "A" ON DWG I-23.
NaOH XFER PUMP RUNNING (2)
NaOH XFER PUMP START/STOP (2)
I-13 C
I-22 A CITRIC ACID
I-8 C CPR
I-8 D CCR
I-9 B PERMEATE MAKE-UP
I-15 A SODIUM HYDROXIDE
1 1/2" CA
3" CPR
10" CCR
6" ROP
6" CF
1" NaOH
NOTE 3
FV 50005
CHEM BAG LOADING
AIR GAP
6" DF
CLEANING TANK
TK-50010
FLUSHING RING
LIT 50010
LE 50010
LG 50010
TE 50010A
TE 50010B
LSH 50010
LSL 50010
12" CF
HV-50041
2" D
CLEANING PUMP
P-50020
CV-50042
10" CF
HV-50048
HV-50045
HV-50044
HV-50043
CARTRIDGE FILTER
CF-50030
SEE NOTE 2
6" SCS
TO CIP NEUTRALIZATION
HV-50047
HV-50046
RO TRAINS
LOW POINT DRAIN
TO PROCESS DRAIN PUMP STATION
3" D
EASTERN MUNICIPAL WATER DISTRICT
APPROVALS
I-12
EASTERN MUNICIPAL WATER DISTRICT
PERRIS II DESALINATION FACILITY
PERRIS, CALIFORNIA
RO MEMBRANE
CLEANING SYSTEM
CH2MHILL
PRELIMINARY
PLOT DATE: 2005\12\05 PLOT TIME: 15:35:10 PM
NOW-SCO-SEWRD USACE PERRIS W/ PDF\d013d.dgn

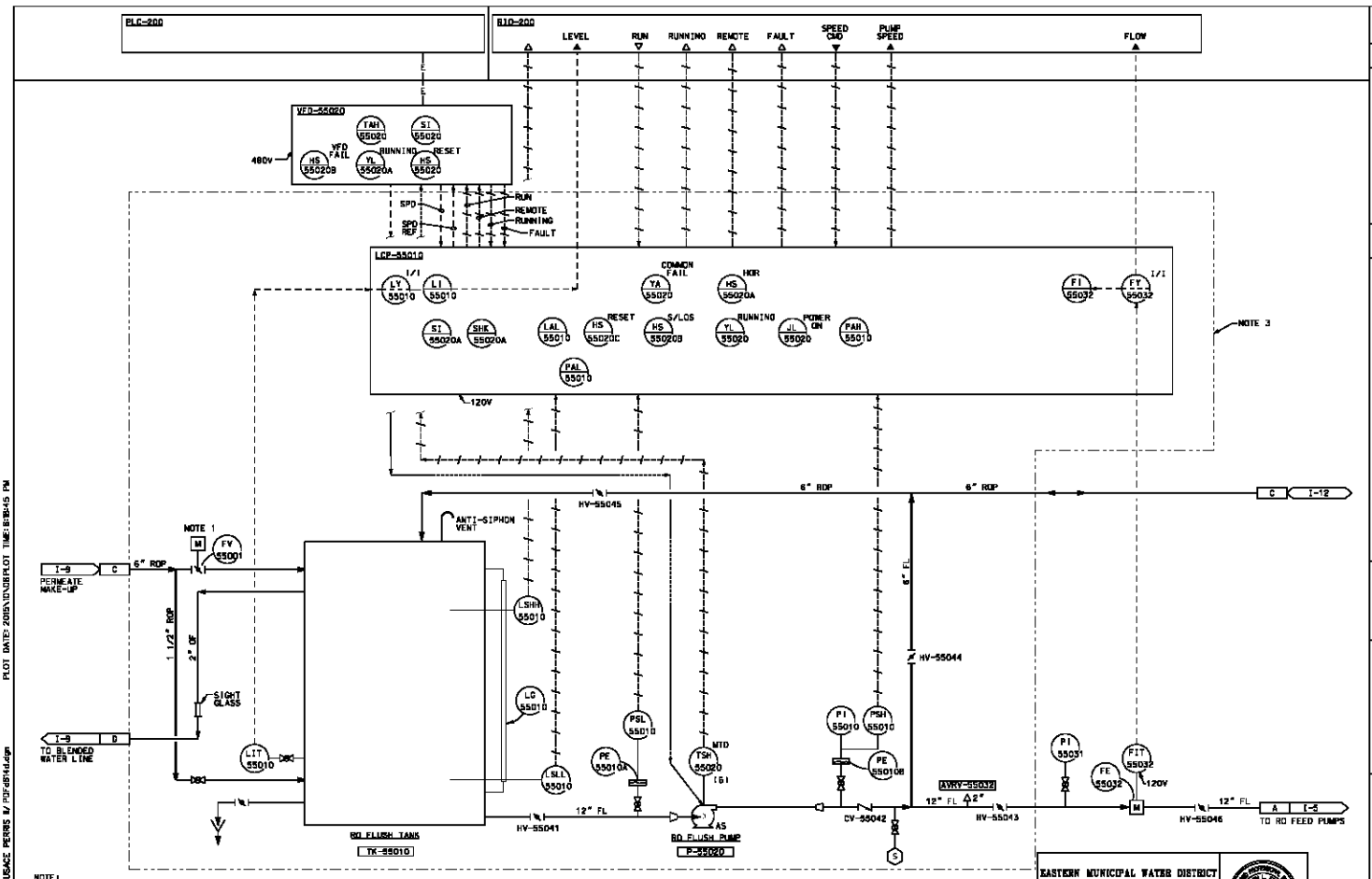
PLC-200
RIO-200
LEVEL
RUN
RUNNING
REMOTE
FAULT
SPEED CMD
PUMP SPEED
FLOW
VFD-55020
TAH 55020
SI 55020
HS 55020B
YL 55020A
KS 55020
VFD FAIL
RUNNING
RESET
480V
SPD
SPD REF
RUN
REMOTE
RUNNING
FAULT
LCP-55010
LY 55010
LI 55010
YA 55020
COMMON FAIL
HS 55020A
HOR
FI 55032
FY 55032
SI 55020A
SHE 55020A
LAL 55010
HS 55020C
RESET
HS 55020B
S/LOS
YL 55020
RUNNING
JL 55020
POWER ON
PAH 55010
PAL 55010
120V
NOTE 3
6" RDP
HV-55045
ANTI-SIPHON VENT
NOTE 1
FY 55001
I-9
PERMEATE MAKE-UP
1 1/2" RDP
2" DF
SIGHT GLASS
TO BLENDED WATER LINE
LIT 55010
LSHH 55010
LC 55010
LSLL 55010
RO FLUSH TANK
TK-55010
12" FL
HV-55041
PSL 55010
PE 55010A
TSH 55020
MTD
AS
RO FLUSH PUMP
P-55020
6" FL
HV-55044
PI 55010
PSH 55010
PE 55010B
CV-55042
AVRV-55032
12" FL
2"
HV-55043
PI 55031
FE 55032
PIT 55032
120V
HV-55046
TO RO FEED PUMPS
I-12
EASTERN MUNICIPAL WATER DISTRICT
PERRIS II DESALINATION FACILITY
PERRIS, CALIFORNIA
RO MEMBRANE
FLUSHING SYSTEM
CH2MHILL
PRELIMINARY
APPROVALS
I-13
NOTE:
1. SEE DETAIL "A" ON DWG I-23.
2. ALL TAG NUMBERS SHALL BE PRECEDED BY "D0010" FOR THE FACILITY NUMBER.
3. ROEM SHALL PROVIDE EQUIPMENT, PIPING, VALVES AND APPURTENANCES WITHIN DASHED BOUNDARY.

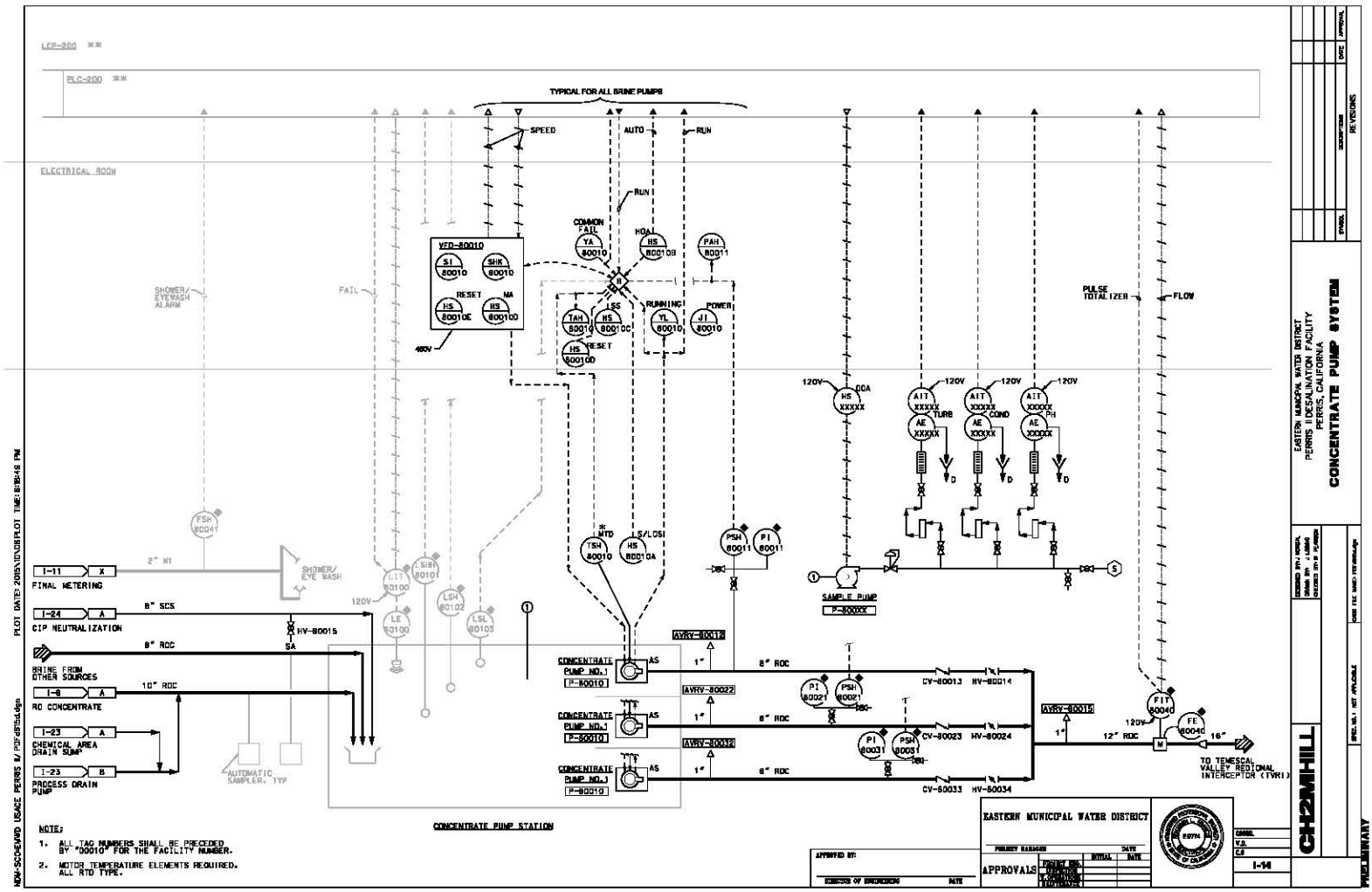
LCP-200 **
PLC-200 **
ELECTRICAL ROOM
TYPICAL FOR ALL BRINE PUMPS
SPEED
AUTO
RUN
RUN I
COMMON FAIL
YA 80010
HOA
HS 80010B
PAH 80011
VFD-80010
SI 80010
SHK 80010
RESET
HS 80010E
MA
HS 80010D
480V
TAH 80010
LSS
HS 80010C
RESET
HS 80010D
RUNNING
YL 80010
POWER
JI 80010
SHOWER/ EYEWASH ALARM
FAIL
PULSE TOTALIZER
FLOW
120V
HS XXXXX
DOA
AIT XXXXX
TURB
AE XXXXX
AIT XXXXX
COND
AE XXXXX
AIT XXXXX
PH
AE XXXXX
FSH 80041
2" N1
SHOWER/ EYE WASH
LIT 80100
LSHH 80101
LSH 80102
LSL 80103
LE 80100
I-11 X
FINAL METERING
I-24 A
CIP NEUTRALIZATION
8" SCS
HV-80015
SA
BRINE FROM OTHER SOURCES
8" ROC
I-8 A
RO CONCENTRATE
10" ROC
I-23 A
CHEMICAL AREA DRAIN SUMP
I-23 B
PROCESS DRAIN PUMP
AUTOMATIC SAMPLER, TYP
TSH 80010
MTD
LS/LOSI
HS 80010A
PSH 80011
PI 80011
SAMPLE PUMP
P-80XXX
AVRV-80012
AVRV-80022
AVRV-80032
CONCENTRATE PUMP NO.1
P-80010
AS
1"
8" ROC
PI 80021
PSH 80021
CV-80013
HV-80014
PI 80031
PSH 80031
CV-80023
HV-80024
CV-80033
HV-80034
AVRV-80015
12" ROC
FIT 80040
FE 80040
16"
TO TEMESCAL VALLEY REGIONAL INTERCEPTOR (TVRI)
CONCENTRATE PUMP STATION
NOTE:
1. ALL TAG NUMBERS SHALL BE PRECEDED BY "00010" FOR THE FACILITY NUMBER.
2. MOTOR TEMPERATURE ELEMENTS REQUIRED. ALL RTD TYPE.
APPROVED BY:
DIRECTOR OF ENGINEERING
DATE
EASTERN MUNICIPAL WATER DISTRICT
PROJECT MANAGER
DATE
APPROVALS
INITIAL
DATE
I-14
EASTERN MUNICIPAL WATER DISTRICT
PERRIS II DESALINATION FACILITY
PERRIS, CALIFORNIA
CONCENTRATE PUMP SYSTEM
SYMBOL
DESCRIPTION
DATE
APPROVAL
REVISIONS
CH2MHILL
PRELIMINARY
PLOT DATE: 2006\12\08 PLOT TIME: 8:38:48 PM
NOW-SCO-SWWD USACE PERRIS W/ PDF-BTS-Ed.dgn

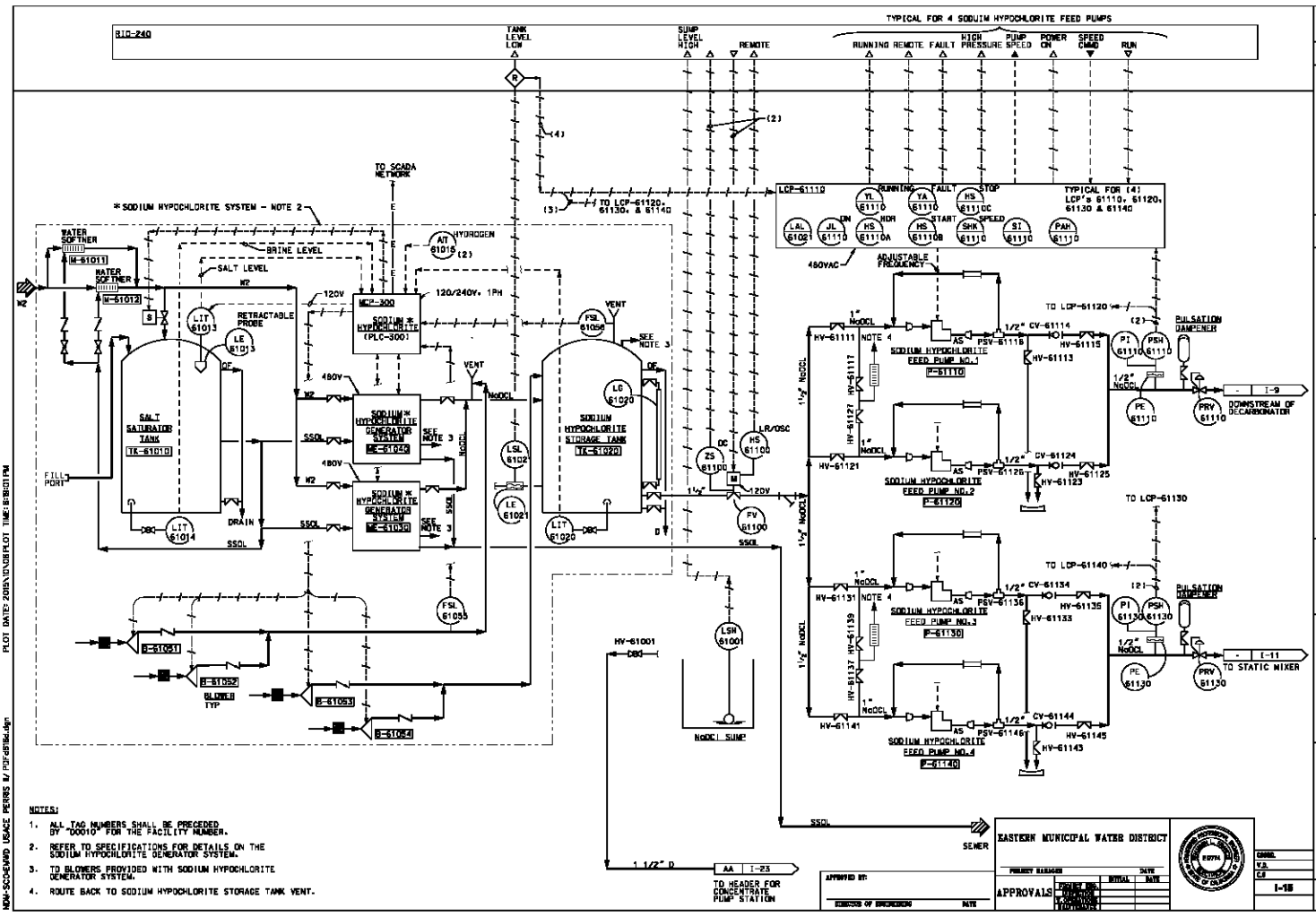
TYPICAL FOR 4 SODIUM HYPOCHLORITE FEED PUMPS
RIO-240
TANK LEVEL LOW
SUMP LEVEL HIGH
REMOTE
RUNNING REMOTE FAULT HIGH PRESSURE PUMP SPEED POWER ON SPEED CMND RUN
TO SCADA NETWORK
* SODIUM HYPOCHLORITE SYSTEM - NOTE 2
WATER SOFTNER
M-61011
M-61012
BRINE LEVEL
SALT LEVEL
N2
120V
120/240V, 1PH
MCP-300
SODIUM * HYPOCHLORITE (PLC-3001)
HYDROGEN
AIT 61015
RETRACTABLE PROBE
LIT 61013
LE 61013
SALT SATURATOR TANK
TK-61010
FILL PORT
DRAIN
LIT 61014
SODIUM * HYPOCHLORITE GENERATOR SYSTEM
GE-61040
GE-61050
480V
SEE NOTE 3
VENT
NaOCl
SSOL
LSL 61102
LE 61021
LIT 61020
FSL 61055
B-61051
B-61052
B-61053
B-61054
BLOWER TYP
SODIUM HYPOCHLORITE STORAGE TANK
TK-61020
FSL 61056
LC 61020
DC
ZS 61100
HS 61100
LR/OSC
FV 61100
1 1/2"
HV-61001
LSN 61001
NaOCl SUMP
TO LCP-61120, 61130, & 61140
LCP-61110
YL 61110
YA 61110
HS 61110C
LAL 61021
JL 61110
HS 61110A
HS 61110B
SHK 61110
SI 61110
PAH 61110
ON
NOR
START
SPEED
TYPICAL FOR (4) LCP's 61110, 61120, 61130 & 61140
480VAC
ADJUSTABLE FREQUENCY
1" NaOCl
NOTE 4
HV-61111
HV-61112
HV-61117
HV-61121
SODIUM HYPOCHLORITE FEED PUMP NO.1
P-61110
SODIUM HYPOCHLORITE FEED PUMP NO.2
P-61120
1/2" CV-61114
HV-61115
HV-61113
1/2" CV-61124
HV-61125
HV-61123
AS
PSV-61116
PSV-61126
TO LCP-61120
TO LCP-61130
TO LCP-61140
PULSATION DAMPENER
PI 61110
PSH 61110
PE 61110
PRV 61110
DOWNSTREAM OF DECARBONATOR
I-9
HV-61131
HV-61132
HV-61139
HV-61137
HV-61141
SODIUM HYPOCHLORITE FEED PUMP NO.3
P-61130
SODIUM HYPOCHLORITE FEED PUMP NO.4
P-61140
1/2" CV-61134
HV-61135
HV-61133
1/2" CV-61144
HV-61145
HV-61143
PSV-61136
PSV-61146
PI 61130
PSH 61130
PE 61130
PRV 61130
I-11
TO STATIC MIXER
SSOL
SEWER
1 1/2" D
AA I-23
TO HEADER FOR CONCENTRATE PUMP STATION
NOTES:
1. ALL TAG NUMBERS SHALL BE PRECEDED BY "00010" FOR THE FACILITY NUMBER.
2. REFER TO SPECIFICATIONS FOR DETAILS ON THE SODIUM HYPOCHLORITE GENERATOR SYSTEM.
3. TO BLOWERS PROVIDED WITH SODIUM HYPOCHLORITE GENERATOR SYSTEM.
4. ROUTE BACK TO SODIUM HYPOCHLORITE STORAGE TANK VENT.
APPROVED BY:
DIRECTOR OF ENGINEERING DATE
EASTERN MUNICIPAL WATER DISTRICT
PROJECT MANAGER
APPROVALS
DRAWN
CHECKED
SUPERVISOR
I-15
CH2MHILL
PRELIMINARY
EASTERN MUNICIPAL WATER DISTRICT
PERRIS II DESALINATION FACILITY
PERRIS, CALIFORNIA
SODIUM HYPOCHLORITE GENERATION AND FEED SYSTEM 1
REVISIONS
DESCRIPTION
SYMBOL
DATE
APPROVAL
PLOT DATE: 2/08/01 TIME: 18:18:01 PM
NOW-SCO-EWMD USACE PERRIS N / PDF-d8184.dgn

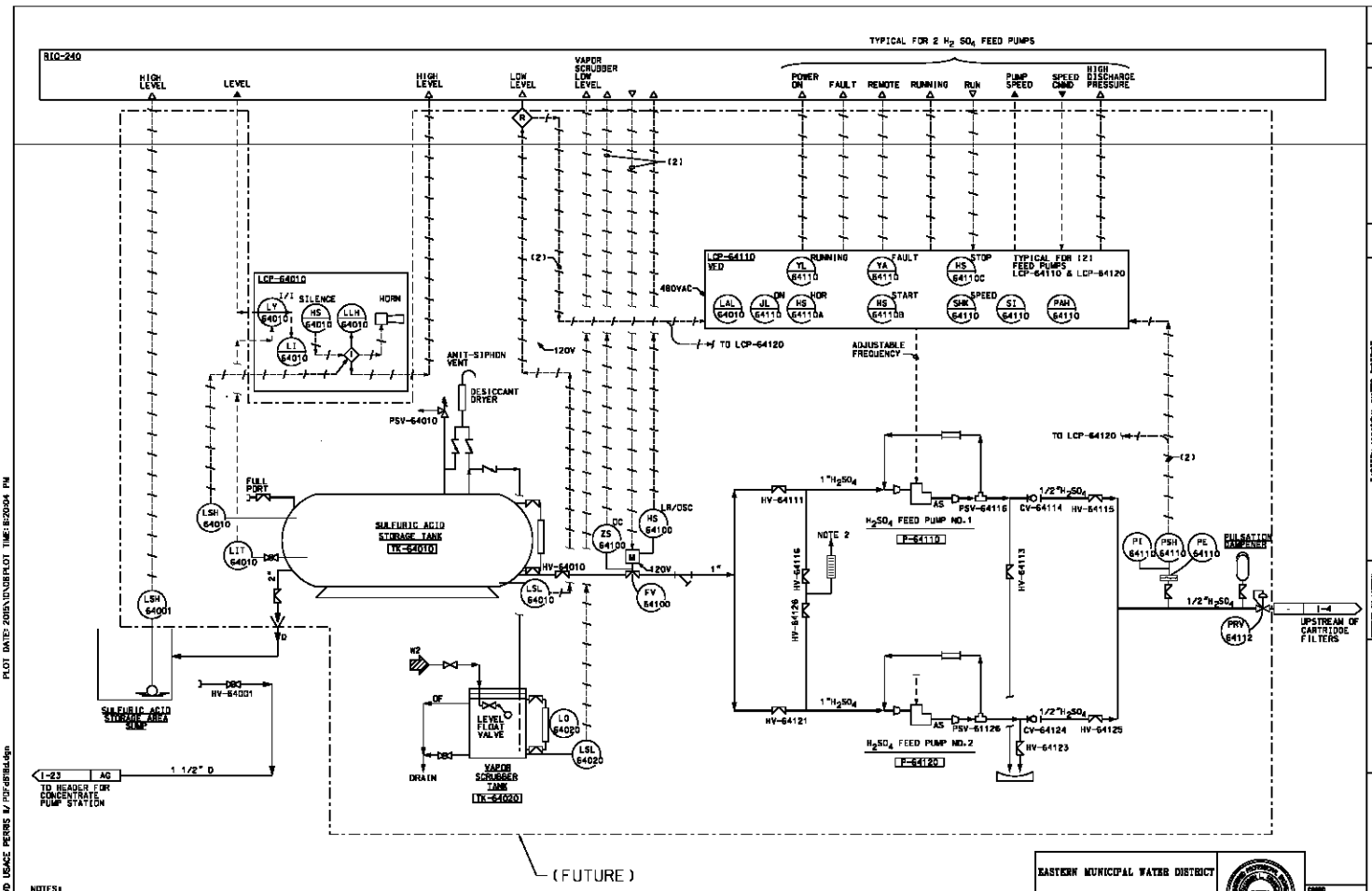

NOTES:

1. ALL TAG NUMBERS SHALL BE PRECEDED BY "00010" FOR THE FACILITY NUMBER.
2. ROUTE BACK TO SULFURIC ACID STORAGE TANK VENT.

EASTERN MUNICIPAL WATER DISTRICT

APPROVALS

I-18

EASTERN MUNICIPAL WATER DISTRICT
PERRIS II DESALINATION FACILITY
PERRIS, CALIFORNIA

SULFURIC ACID STORAGE AND FEED SYSTEM

CH2MHILL

PRELIMINARY

NOW-SCO-EWMD USACE PERRIS W/ PDF-d8TBL4.dgn PLOT DATE: 2005\10\05 PLOT TIME: 8:20:04 PM

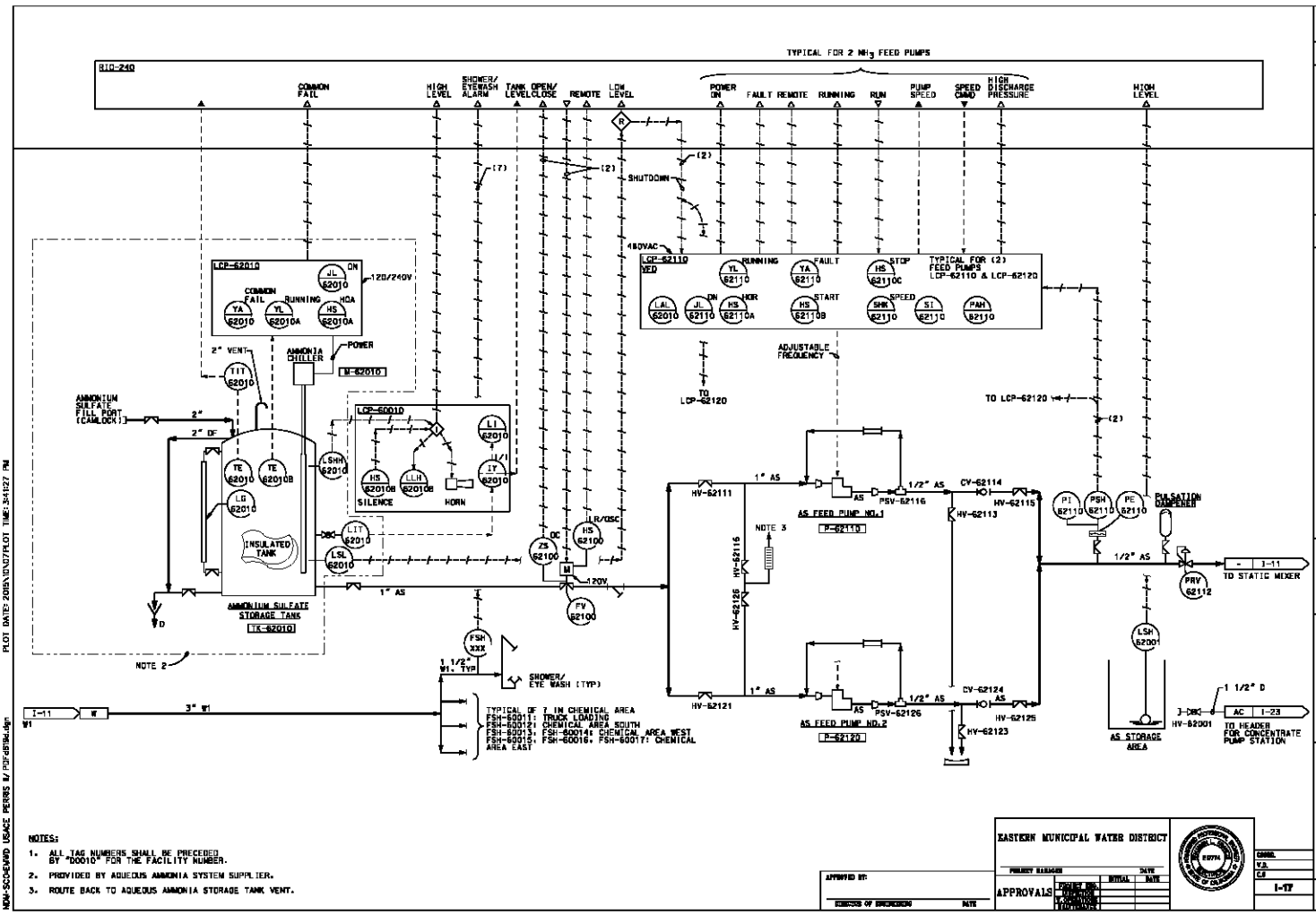
TYPICAL FOR 2 NH3 FEED PUMPS
BID-240
COMMON FAIL
HIGH LEVEL
SHOWER/ EYEWASH ALARM
TANK LEVEL
OPEN/ CLOSE
REMOTE
LOW LEVEL
POWER ON
FAULT
REMOTE
RUNNING
RUN
PUMP SPEED
SPEED CMND
HIGH DISCHARGE PRESSURE
HIGH LEVEL
SHUTDOWN
480VAC
LCP-62110 VFD
TYPICAL FOR (2) FEED PUMPS LCP-62110 & LCP-62120
ADJUSTABLE FREQUENCY
TO LCP-62120
TO LCP-62120
LCP-62010
120/240V
2" VENT
POWER
AMMONIA CHILLER
M-62010
AMMONIUM SULFATE FILL PORT (CAMLOCK)
2"
2" DF
LCP-60010
SILENCE
HORN
INSULATED TANK
AMMONIUM SULFATE STORAGE TANK
TK-62010
NOTE 2
1" AS
HV-62111
HV-62115
HV-62125
HV-62121
NOTE 3
AS FEED PUMP NO.1
P-62110
AS FEED PUMP NO.2
P-62120
PSV-62116
PSV-62126
CV-62114
HV-62113
CV-62124
HV-62123
HV-62125
PULSATION DAMPENER
PRV 62112
TO STATIC MIXER
LSH 62001
AS STORAGE AREA
HV-62001
1 1/2" D
TO HEADER FOR CONCENTRATE PUMP STATION
FSH XXX
1 1/2" W1. TYP
SHOWER/ EYE WASH (TYP)
TYPICAL OF 7 IN CHEMICAL AREA
FSH-60011: TRUCK LOADING
FSH-60012: CHEMICAL AREA SOUTH
FSH-60013: FSH-60014: CHEMICAL AREA WEST
FSH-60015: FSH-60016: FSH-60017: CHEMICAL AREA EAST
3" W1
I-11
W
W1
I-23
AC
NOTES:
1. ALL TAG NUMBERS SHALL BE PRECEDED BY "D0010" FOR THE FACILITY NUMBER.
2. PROVIDED BY AQUEOUS AMMONIA SYSTEM SUPPLIER.
3. ROUTE BACK TO AQUEOUS AMMONIA STORAGE TANK VENT.
EASTERN MUNICIPAL WATER DISTRICT
APPROVALS
I-17
EASTERN MUNICIPAL WATER DISTRICT
PERRIS II DESALINATION FACILITY
PERRIS, CALIFORNIA
AMMONIUM SULFATE STORAGE AND FEED SYSTEM
CH2MHILL
PRELIMINARY
PLOT DATE: 2/09/01 TIME: 3:41:27 PM
NOW-SCOBEWD USACE PERRIS N / PDF-d8194.dgn

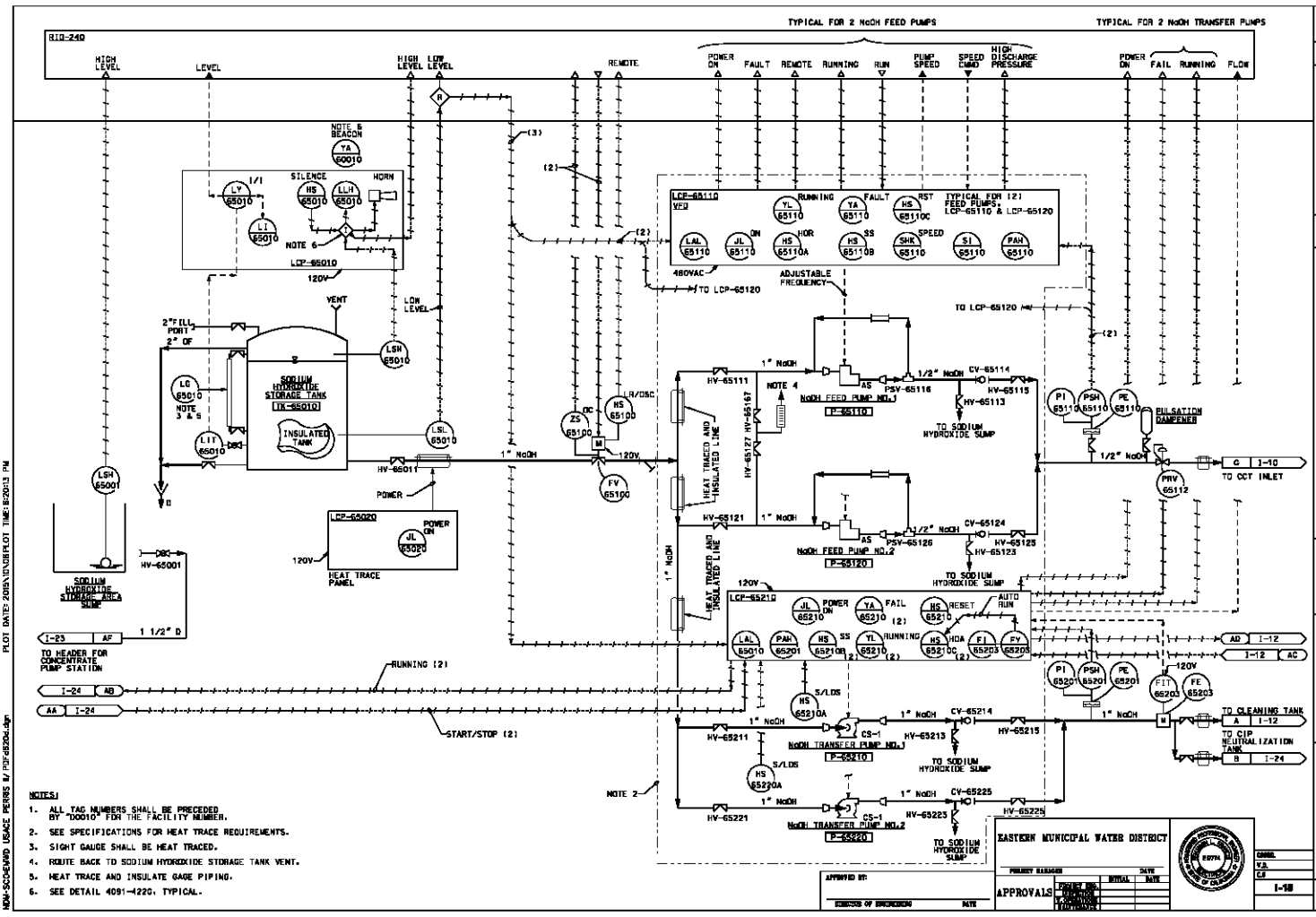
TYPICAL FOR 2 NaOH FEED PUMPS
TYPICAL FOR 2 NaOH TRANSFER PUMPS
RIO-240
HIGH LEVEL
LEVEL
HIGH LEVEL
LOW LEVEL
REMOTE
POWER ON
FAULT
REMOTE
RUNNING
RUN
PUMP SPEED
SPEED CMND
HIGH DISCHARGE PRESSURE
POWER ON
FAIL
RUNNING
FLOW
NOTE 6 BEACON
YA 60010
SILENCE
HORN
LY 65010
HS 65010
LLH 65010
LI 65010
NOTE 6
LCP-65010
120V
VENT
LOW LEVEL
2" FILL PORT
2" OF
LSH 65010
LG 65010
NOTE 3 & 5
SODIUM HYDROXIDE STORAGE TANK
TK-65010
INSULATED TANK
LIT 65010
LSL 65010
HV-65011
POWER
LSH 65001
SODIUM HYDROXIDE STORAGE AREA SUMP
HV-65001
LCP-65020
POWER ON
JL 65020
120V
HEAT TRACE PANEL
I-23 AF
1 1/2" D
TO HEADER FOR CONCENTRATE PUMP STATION
I-24 AB
AA I-24
RUNNING (2)
START/STOP (2)
LR/OSC
ZS 65100
OC
HS 65100
M
120V
FV 65100
1" NaOH
HEAT TRACED AND INSULATED LINE
HV-65111
HV-65127
HV-65167
NOTE 4
HV-65121
LCP-65110
VFD
YL 65110
RUNNING
YA 65110
FAULT
HS 65110C
RST
TYPICAL FOR (2) FEED PUMPS: LCP-65110 & LCP-65120
LAL 65110
JL 65110
ON
HS 65110A
HOR
HS 65110B
SS
SHR 65110
SPEED
SI 65110
PAH 65110
480VAC
ADJUSTABLE FREQUENCY
TO LCP-65120
AS
PSV-65116
NaOH FEED PUMP NO.1
P-65110
1/2" NaOH
CV-65114
HV-65115
HV-65113
TO SODIUM HYDROXIDE SUMP
PSV-65126
NaOH FEED PUMP NO.2
P-65120
CV-65124
HV-65125
HV-65123
PI 65110
PSH 65110
PE 65110
PULSATION DAMPENER
PRV 65112
C I-10
TO CCT INLET
LCP-65210
JL 65210
POWER ON
YA 65210
FAIL
HS 65210
RESET
AUTO RUN
LAL 65010
PAH 65201
HS 65210B
SS
YL 65210
RUNNING
HS 65210C
HOA
FI 65203
FV 65203
AD I-12
I-12 AC
PI 65201
PSH 65201
PE 65201
FIT 65203
FE 65203
HS 65210A
S/LOS
CV-65214
HV-65211
CS-1
NaOH TRANSFER PUMP NO.1
P-65210
HV-65213
HV-65215
TO SODIUM HYDROXIDE SUMP
TO CLEANING TANK
A I-12
TO CIP NEUTRALIZATION TANK
B I-24
HS 65220A
CV-65225
HV-65221
NaOH TRANSFER PUMP NO.2
P-65220
HV-65223
HV-65225
NOTE 2
EASTERN MUNICIPAL WATER DISTRICT
APPROVALS
I-18
CH2MHILL
PRELIMINARY
EASTERN MUNICIPAL WATER DISTRICT
PERRIS II DESALINATION FACILITY
PERRIS, CALIFORNIA
SODIUM HYDROXIDE STORAGE AND FEED SYSTEM
REVISIONS
NOTES:
1. ALL TAG NUMBERS SHALL BE PRECEDED BY "00010" FOR THE FACILITY NUMBER.
2. SEE SPECIFICATIONS FOR HEAT TRACE REQUIREMENTS.
3. SIGHT GAUGE SHALL BE HEAT TRACED.
4. ROUTE BACK TO SODIUM HYDROXIDE STORAGE TANK VENT.
5. HEAT TRACE AND INSULATE GAGE PIPING.
6. SEE DETAIL 4091-422G, TYPICAL.

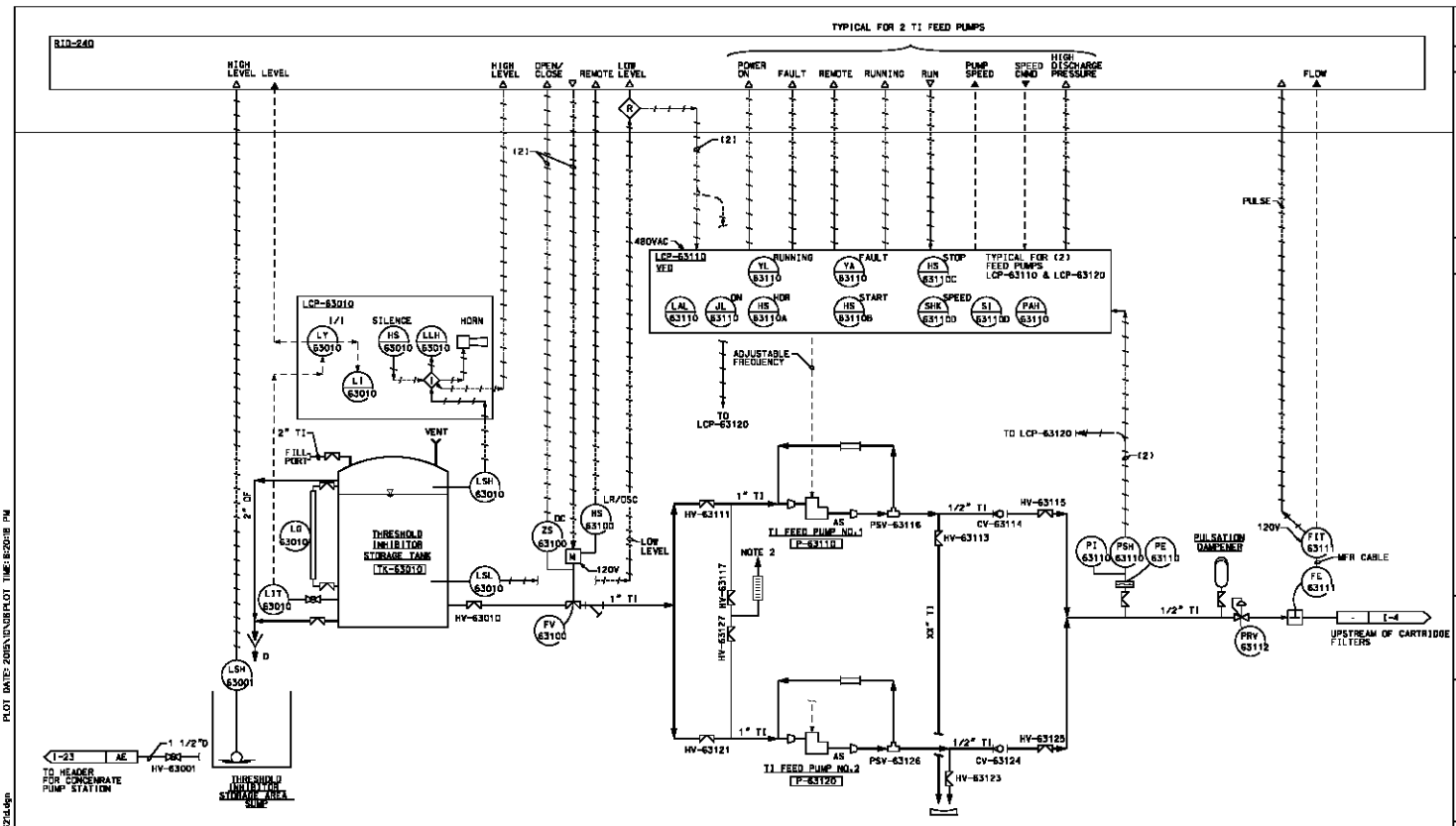

NOTES:

1. ALL TAG NUMBERS SHALL BE PRECEDED BY "00310" FOR THE FACILITY NUMBER.
2. ROUTE BACK TO THRESHOLD INHIBITOR STORAGE TANK VENT.

PLOT DATE: 2006\10\05 PLOT TIME: 8:20:18 PM

NOW-SCO-EWMD USACE PERRIS N / PDF-63714.dgn

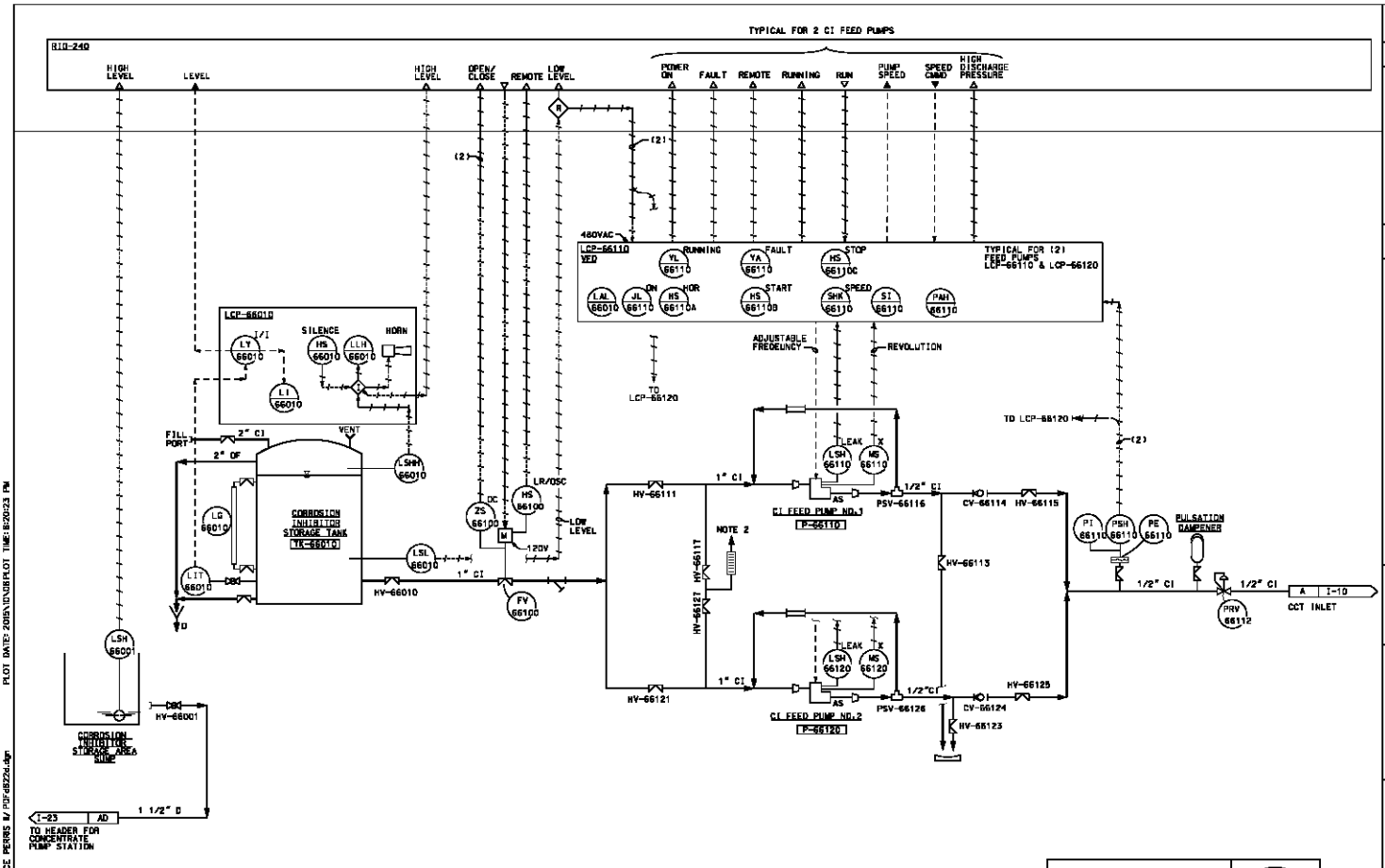

NOTES:

1. ALL TAG NUMBERS SHALL BE PREFIXED BY "00010" FOR THE FACILITY NUMBER.
2. ROUTE BACK TO CORROSION INHIBITOR STORAGE TANK VENT.

APPROVED BY: DIRECTOR OF ENGINEERING DATE

EASTERN MUNICIPAL WATER DISTRICT

PROJECT MANAGER DATE

APPROVALS: PROJECT ENG. / ELECTRICAL / INSTRUMENTATION / STRUCTURAL / MECHANICAL — INITIAL / DATE

I-26

EASTERN MUNICIPAL WATER DISTRICT
PERRIS II DESALINATION FACILITY
PERRIS, CALIFORNIA

CORROSION INHIBITOR STORAGE AND FEED SYSTEM

CH2MHILL

PRELIMINARY

PLOT DATE: 2/26/01 TIME: 8:20:23 PM

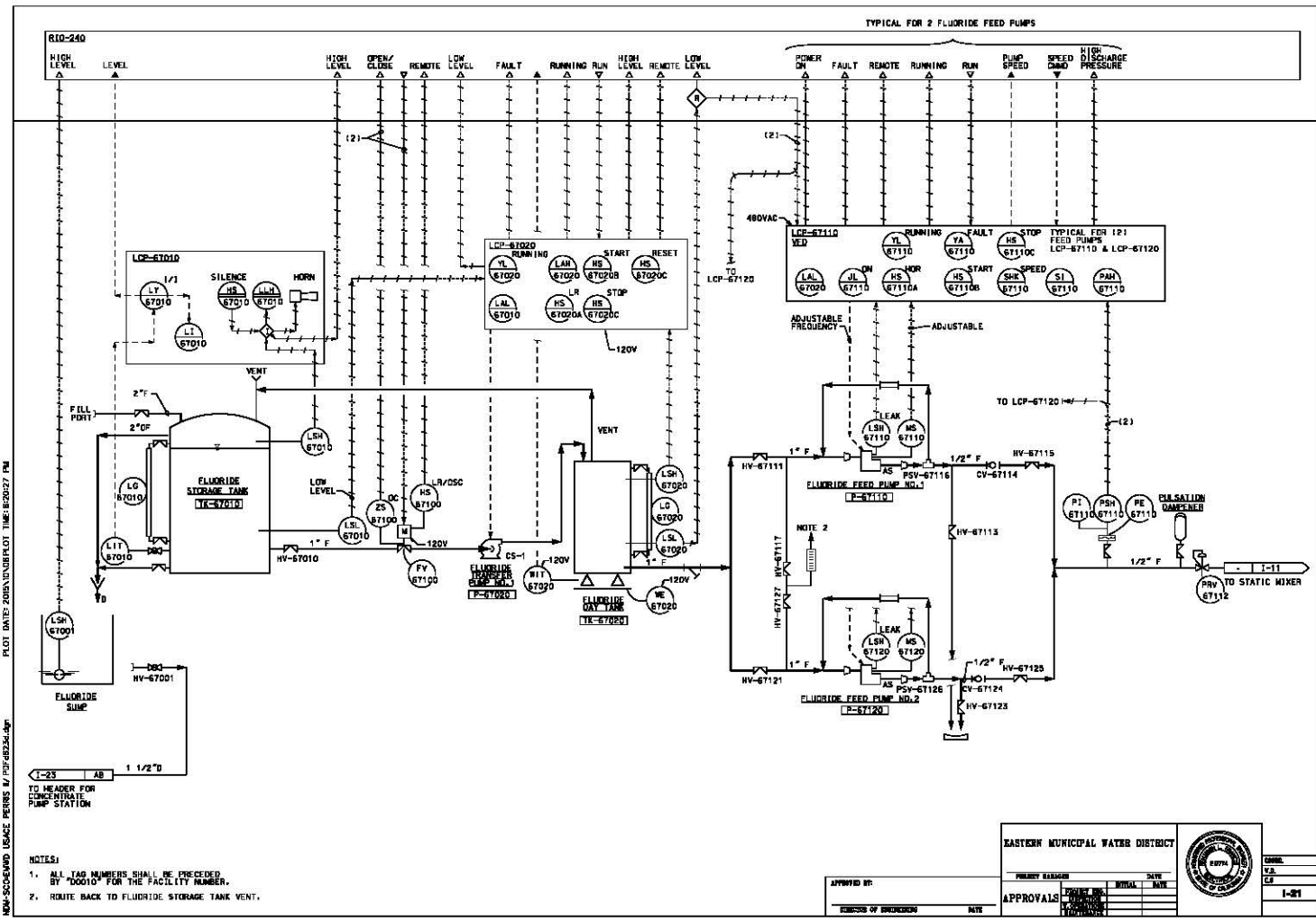

NOTES:

1. ALL TAG NUMBERS SHALL BE PRECEDED BY "D0010" FOR THE FACILITY NUMBER.
2. ROUTE BACK TO FLUORIDE STORAGE TANK VENT.

APPROVED BY:

DIRECTOR OF ENGINEERING DATE

EASTERN MUNICIPAL WATER DISTRICT

PROJECT MANAGER DATE

APPROVALS

	INITIAL	DATE
PROJECT ENG.		
ELECTRICAL		
MECHANICAL		
INSTRUMENTATION		

GENERAL
V.A.
C.F

I-21

EASTERN MUNICIPAL WATER DISTRICT
PERRIS II DESALINATION FACILITY
PERRIS, CALIFORNIA

FLUORIDE STORAGE AND FEED SYSTEM

CH2MHILL

PRELIMINARY

REVISIONS

SYMBOL	DESCRIPTION	DATE	APPROVAL

PLOT DATE: 2006\10\05 PLOT TIME: 8:20:27 PM

NOW-SCO-SWWD USACE PERRIS W/ PDF\d6334.dgn

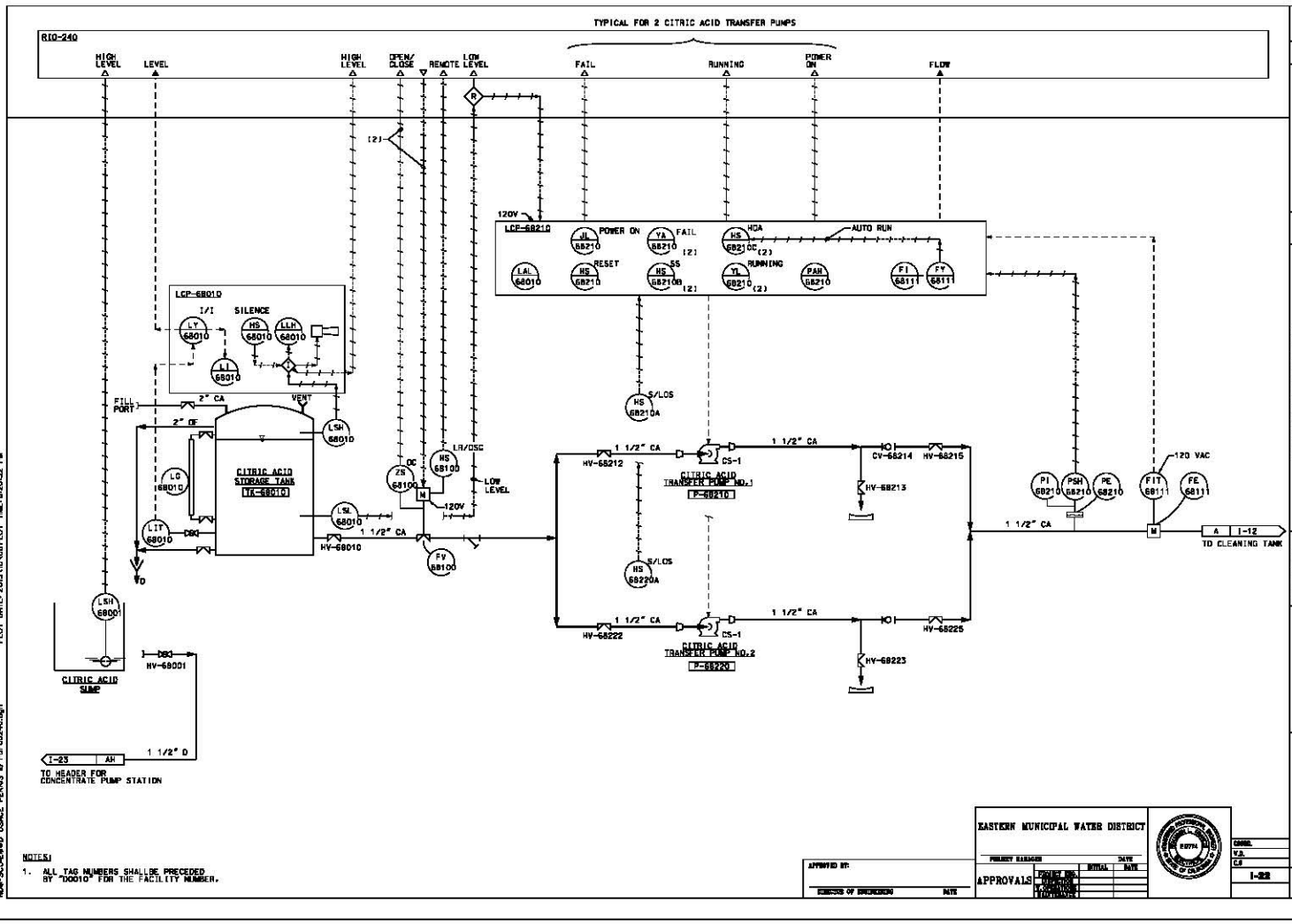

NOTES:

1. ALL TAG NUMBERS SHALL BE PRECEDED BY "D0010" FOR THE FACILITY NUMBER.

EASTERN MUNICIPAL WATER DISTRICT

APPROVALS

I-22

EASTERN MUNICIPAL WATER DISTRICT
PERRIS II DESALINATION FACILITY
PERRIS, CALIFORNIA

CITRIC ACID STORAGE AND FEED SYSTEM

CH2MHILL

PRELIMINARY

NOW-SCO-EWMD USACE PERRIS W/ PDF\d8344.dgn PLOT DATE: 2005\10\05 PLOT TIME: 8:20:32 PM

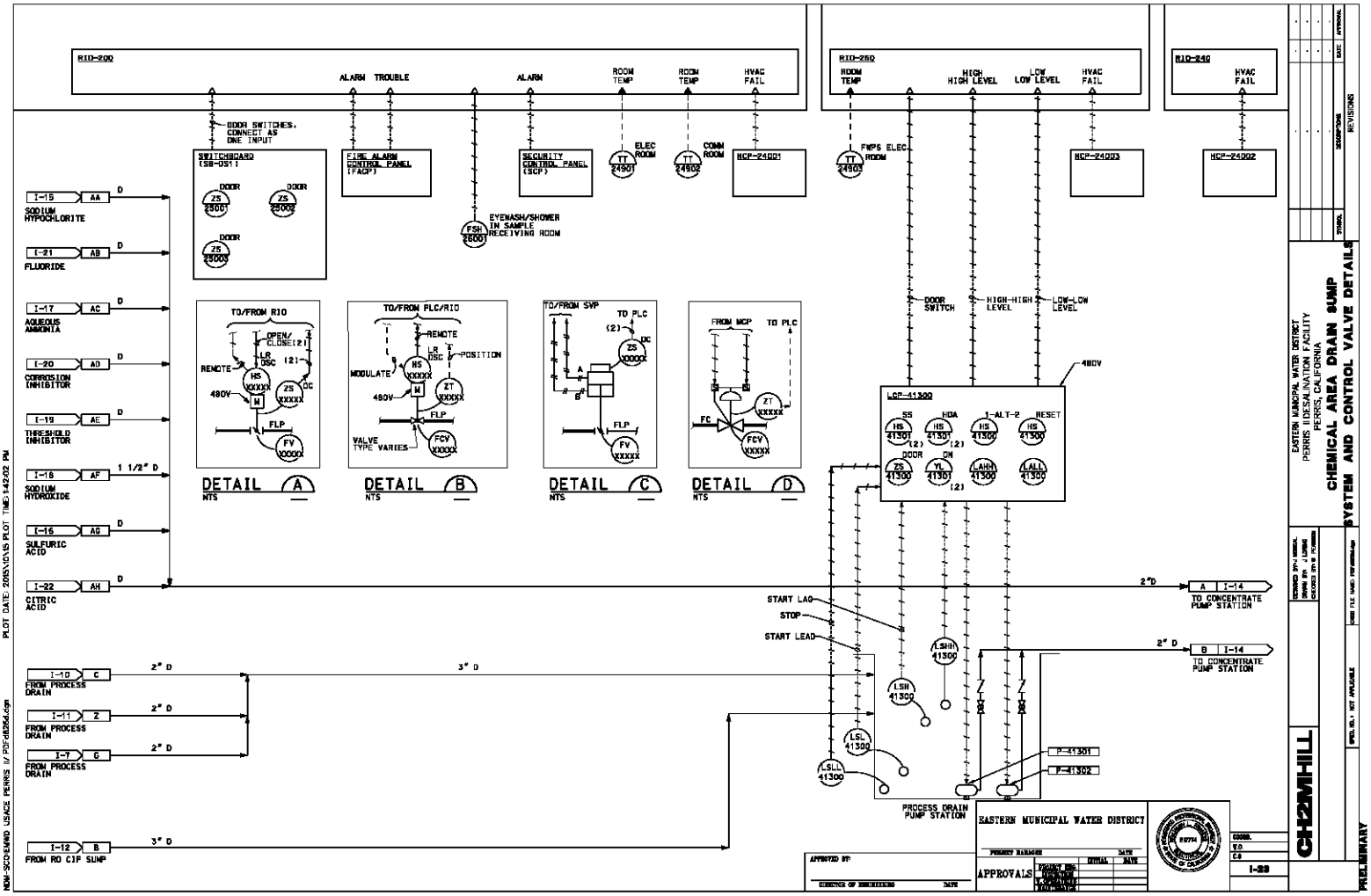
RIO-200
ALARM
TROUBLE
ALARM
ROOM TEMP
ROOM TEMP
HVAC FAIL
RIO-250
ROOM TEMP
HIGH HIGH LEVEL
LOW LOW LEVEL
HVAC FAIL
RIO-240
HVAC FAIL
DOOR SWITCHES, CONNECT AS ONE INPUT
SWITCHBOARD (SB-0511)
DOOR
ZS 2500
ZS 2500
ZS 2500
FIRE ALARM CONTROL PANEL (FACP)
SECURITY CONTROL PANEL (SCP)
TT 2401
ELEC ROOM
TT 2402
COMM ROOM
HCP-24001
TT 2403
FWPS ELEC ROOM
HCP-24003
HCP-24002
FSH 2600
EYEWASH/SHOWER IN SAMPLE RECEIVING ROOM
I-15 AA
SODIUM HYPOCHLORITE
I-21 AB
FLUORIDE
I-17 AC
AQUEOUS AMMONIA
I-20 AD
CORROSION INHIBITOR
I-19 AE
THRESHOLD INHIBITOR
I-18 AF
SODIUM HYDROXIDE
I-16 AG
SULFURIC ACID
I-22 AH
CITRIC ACID
D
1 1/2" D
TO/FROM RIO
OPEN/CLOSE (2)
LR OSC (2)
REMOTE
HS XXXXX
ZS XXXXX
DC
480V
FLP
FV XXXXX
DETAIL A
NTS
TO/FROM PLC/RIO
REMOTE
LR OSC
POSITION
MODULATE
HS XXXXX
ZT XXXXX
480V
FLP
VALVE TYPE VARIES
FCV XXXXX
DETAIL B
NTS
TO/FROM SVP
TO PLC
(2)
ZS XXXXX
DC
FLP
FV XXXXX
DETAIL C
NTS
FROM MCP
TO PLC
ZT XXXXX
FC
FCV XXXXX
DETAIL D
NTS
DOOR SWITCH
HIGH-HIGH LEVEL
LOW-LOW LEVEL
480V
LCP-41300
SS
HOA
1-ALT-2
RESET
HS 41301
HS 41301
HS 41300
HS 41300
(2)
(2)
DOOR
ON
ZS 41300
YL 41301
LAHH 41300
LALL 41300
(2)
START LAG
STOP
START LEAD
LSHH 41300
LSH 41300
LSL 41300
LSLL 41300
P-41301
P-41302
PROCESS DRAIN PUMP STATION
2" D
A I-14
TO CONCENTRATE PUMP STATION
B I-14
TO CONCENTRATE PUMP STATION
I-10 C
FROM PROCESS DRAIN
I-11 Z
FROM PROCESS DRAIN
I-7 G
FROM PROCESS DRAIN
2" D
3" D
I-12 B
FROM RO CIP SUMP
APPROVED BY:
CHIEF OF ENGINEERING
DATE
EASTERN MUNICIPAL WATER DISTRICT
PROJECT MANAGER
DATE
APPROVALS
INITIAL
DATE
DRAWN BY
DESIGNED BY
SUPERVISOR
CHECKED BY
CHIEF OF ENGINEERING
I-23
CH2MHILL
EASTERN MUNICIPAL WATER DISTRICT
PERRIS II DESALINATION FACILITY
PERRIS, CALIFORNIA
CHEMICAL AREA DRAIN SUMP
SYSTEM AND CONTROL VALVE DETAILS
PRELIMINARY
SYMBOL
DESCRIPTION
DATE
APPROVAL
REVISIONS
PLOT DATE: 2005\10\15 PLOT TIME: 14:22:22 PM
NEW-SCD-EMWD USACE PERRIS W PDF\48356d.dgn

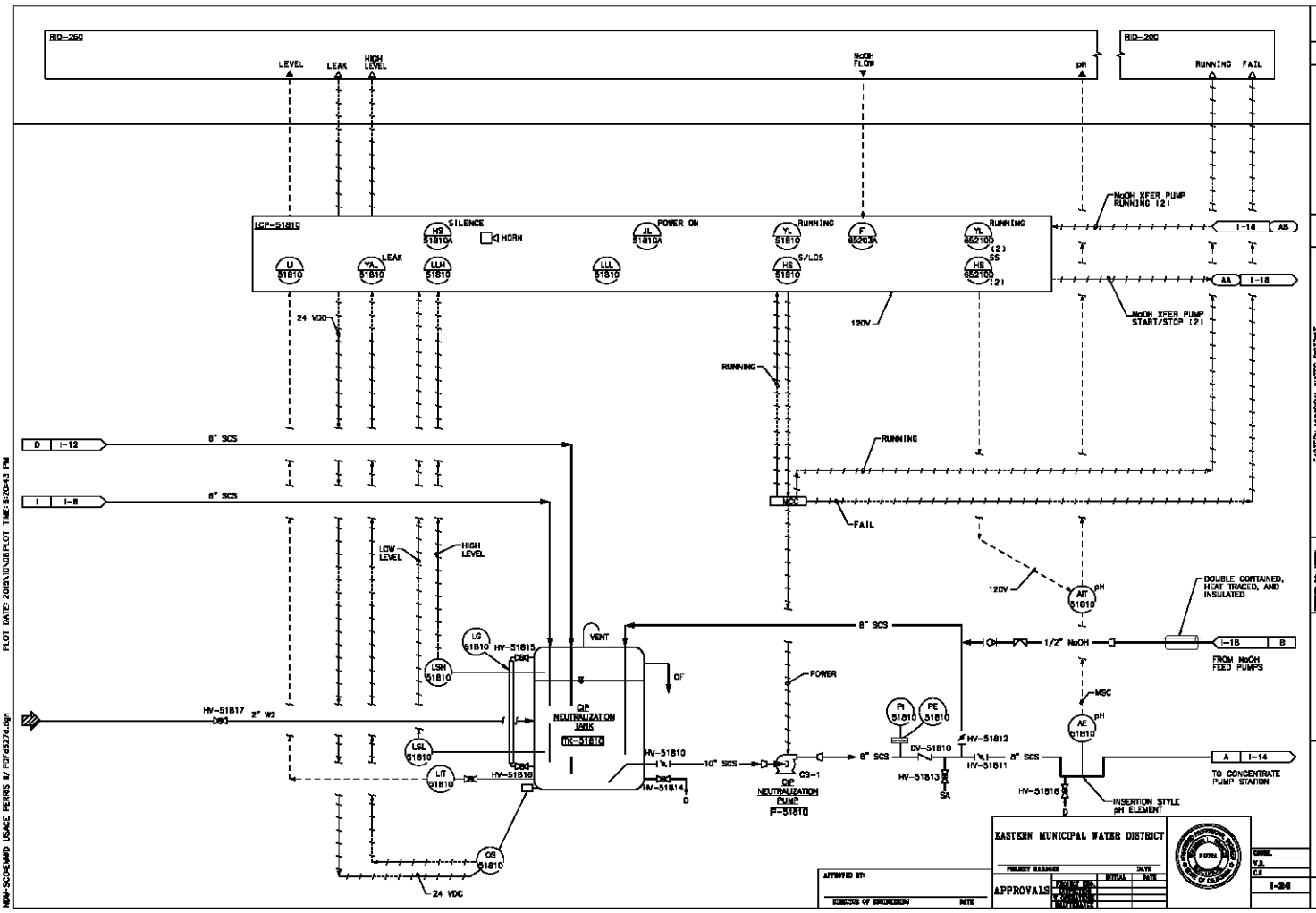
RID-250
RID-200
LEVEL
LEAK
HIGH LEVEL
NaOH FLOW
pH
RUNNING
FAIL
LCP-51810
SILENCE
HORN
POWER ON
RUNNING
S/LOS
NaOH XFER PUMP RUNNING (2)
NaOH XFER PUMP START/STOP (2)
24 VDC
120V
8" SCS
LOW LEVEL
HIGH LEVEL
VENT
CIP NEUTRALIZATION TANK
TK-51810
POWER
10" SCS
CIP NEUTRALIZATION PUMP
P-51810
CS-1
CV-51810
1/2" NaOH
DOUBLE CONTAINED, HEAT TRACED, AND INSULATED
FROM NaOH FEED PUMPS
INSERTION STYLE pH ELEMENT
TO CONCENTRATE PUMP STATION
2" W2
EASTERN MUNICIPAL WATER DISTRICT
PERRIS II DESALINATION FACILITY
PERRIS, CALIFORNIA
CIP NEUTRALIZATION
CH2MHILL
PRELIMINARY
APPROVALS
I-24

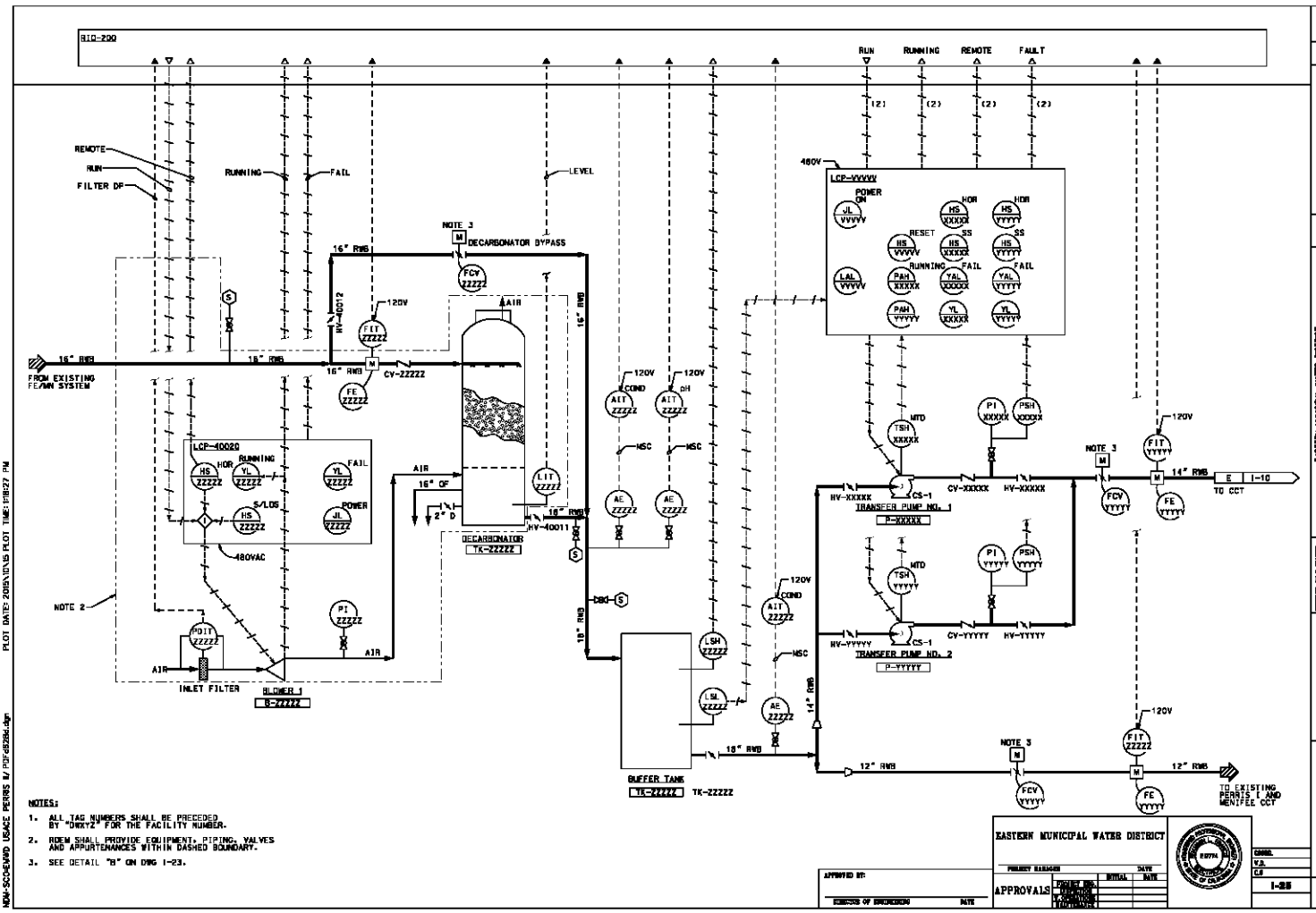

NOTES:

1. ALL TAG NUMBERS SHALL BE PRECEDED BY "DWXYZ" FOR THE FACILITY NUMBER.
2. RDEM SHALL PROVIDE EQUIPMENT, PIPING, VALVES AND APPURTENANCES WITHIN DASHED BOUNDARY.
3. SEE DETAIL "B" ON DWG I-23.

EASTERN MUNICIPAL WATER DISTRICT

APPROVALS

I-25

CH2MHILL

EASTERN MUNICIPAL WATER DISTRICT
PERRIS II DESALINATION FACILITY
PERRIS, CALIFORNIA

BYPASS DEGASIFICATION SYSTEM

REVISIONS

PRELIMINARY

NOW-SCO-EWMD USACE PERRIS W/ PDF-d5384.dgn PLOT DATE: 2/05/01\01:15 PLOT TIME: 11:18:27 PM