DEPARTMENT OF NATURAL RESOURCES AND CONSERVATION
HAVRE WATER RESOURCES UNIT OFFICE

STEVE BULLOCK, GOVERNOR

210 6TH AVENUE
PO BOX 1828

STATE OF MONTANA

PHONE (406) 265-5516
FAX (406) 265-2225

HAVRE, MONTANA 59501-1828

April 9, 2013

Power-Teton County Water & Sewer District
PO Box 176
Power, MT 59468

RE: Draft Preliminary Determination to Deny for Application for Beneficial Water Use Permit 41K 30049120.

Dear Managers:

The Havre Water Resources Regional Office has completed its review of your Application for Beneficial Water Use Permit No. 41K 30049120. This review consisted of an evaluation of the criteria for issuance of permit found in §85-2-311, MCA. The Department has determined that the criteria have not been met and the application should be denied. A copy of the Draft Preliminary Determination to deny is attached.

You may make a request within 15 days of the date of this letter to schedule a meeting with the Department to provide additional information in support of the specific criteria resulting in this denial. **Your deadline for requesting a meeting is April 24, 2013**.

If you choose not to schedule a meeting with the Department within 15 days of the date of this letter, the Department will issue the Preliminary Determination to deny your application and forward the application to the Hearings Unit. The hearing date will be within 45 days of the Preliminary Determination issuance.

If you do not intend to further pursue this application, you can request the application be withdrawn at any time during this process. If you have any questions or comments, please do not hesitate to contact me at (406)265-5516.

Sincerely,

Kraig Van Voast, Regional Manager
Havre Water Resources Regional Office

BEFORE THE DEPARTMENT OF
NATURAL RESOURCES AND CONSERVATION
OF THE STATE OF MONTANA

* * * * * * *

APPLICATION FOR BENEFICIAL WATER USE PERMIT NO. 41K 30049120	)))	**PRELIMINARY DETERMINATION TO DENY PERMIT**

* * * * * * *

On August 25, 2010, Power – Teton County Water & Sewer District (Applicant) submitted Application for Beneficial Water Use Permit No. 41K 30049120 to the Havre Water Resources Office of the Department of Natural Resources and Conservation (Department or DNRC) for 70 (GPM) up to 40 acre-feet (AF) per year for Municipal use. The Department published receipt of the Application on its website. The Department sent Applicant a deficiency letter under § 85-2-302, Montana Code Annotated (MCA), dated February 16, 2011. The Applicant responded with information dated February 22, 2011. The Application was determined to be correct and complete as of March 15, 2011. An Environmental Assessment for this Application was completed on June 28, 2011. Applicant submitted Waiver of 120 Days Statutory Timeline for Preliminary Determination Decision on June 29, 2011.

INFORMATION

The Department considered the following information submitted by the Applicant.

Application as filed:

- Application for Beneficial Water Use Permit, Form 600
- Attachments
- Basin Closure Area Addendum, Form 600-BCA
- USGS Topographic Maps depicting the point of diversion, conveyance facilities, place of storage and place of use

Information Received after Application Filed

- Deficiency Letter Response received by DNRC on February 22, 2011
- Waiver of 120 Days Statutory Timeline for Preliminary Determination Decision

Information within the Department's Possession/Knowledge

- Hearings Examiner's Order-In the Matter of Application No. 41K-30043385 by Lee
- Hearings Examiner's Order-In the Matter of Application No. 41K-30045713 by Konen

The Department has fully reviewed and considered the evidence and argument submitted in this Application and preliminarily determines the following pursuant to the Montana Water Use Act (Title 85, chapter 2, part 3, MCA).

PROPOSED APPROPRIATION

FINDINGS OF FACT

1. The Applicant proposes to divert surface water from Muddy Creek from January 1 through December 31 at a rate of 70 (GPM) up to 40 acre-feet (AF) per year for Municipal use. The proposed appropriation diverts water in the SESW Section 27 T23N R1W Teton County, by means of a 5 HP pump, through a treatment facility plant and into a 30,000 gallon tank. From the tank it is pumped and distributed to the town of Power generally located in the SW Section 25 T23N R1W Teton County and a 150,000 gallon storage tank located in the SENENE section 25 T23N R1W Teton County.
2. The waste water system serving the town of Power disposes effluent through evaporation through a lined lagoon type system; therefore, use associated with the municipal purposes, representing most of the proposed appropriation, is largely consumptive and therefore considered to be a 100% depletion from Muddy Creek.
3. The Town of Power currently and has historically used water provided through the Bureau of Reclamation. The infrastructure is currently in place and has been in use since March 1970.

BASIN CLOSURE

FINDINGS OF FACT

4. This application is for Municipal use. This application is located within the statutory upper Missouri River basin closure area.

CONCLUSIONS OF LAW

5. DNRC cannot grant an application for a permit to appropriate water within the upper Missouri River basin until final decrees have been issued in accordance with Title 85, chapter 2, part 2, MCA, for all of the sub-basins of the upper Missouri River basin. § 85-2-343(1), MCA. The upper Missouri River basin consists of the drainage area of the Missouri River and its tributaries above Morony Dam. (§ 85-2-342, MCA).

6. This Application is for Municipal use using water diverted from Muddy Creek. The Application falls under the exceptions for the basin closure, § 85-2-343, MCA. Section § 85-2-343 (2)(e), MCA, allows for the acceptance of permit applications to divert Muddy Creek water to control erosion in the source. (FOF No. 3)

7. In reviewing an application for groundwater in a closed basin, the District Court in Sitz Ranch v. DNRC observed:

> The basin from which applicants wish to pump water is closed to further appropriations by the legislature. The tasks before an applicant to become eligible for an exception are daunting. The legislature set out the criteria discussed above (§85-2-311, MCA) and placed the burden of proof squarely on the applicant. The Supreme Court has instructed that those burdens are exacting. It is inescapable that an applicant to appropriate water in a closed basin must withstand strict scrutiny of each of the legislatively required factors.

Sitz Ranch v. DNRC, DV-10-13390, Fifth Judicial District Court, *Order Affirming DNRC Decision*, (2011) Pg. 7.

A basin closure exception does not relieve the Department of analyzing § 85-2-311, MCA criteria. Qualification under a basin closure exception allows the Department to accept an application for processing. The Applicant must still prove the requisite criteria. E.g., *In the Matter of Application for Beneficial Water Use Permit No. 41K-30043385 by Marc E. Lee* (DNRC Final Order 2011); *In the Matter of Application for Beneficial Water Use Permit No. 41K-30045713 by Nicholas D. Konen*, (DNRC Final Order 2011).

§ 85-2-311, MCA, BENEFICIAL WATER USE PERMIT CRITERIA

GENERAL CONCLUSIONS OF LAW

8. The Montana Constitution expressly recognizes in relevant part that:

> (1) All existing rights to the use of any waters for any useful or beneficial purpose are hereby recognized and confirmed.
> (2) The use of all water that is now or may hereafter be appropriated for sale, rent, distribution, or other beneficial use . . . shall be held to be a public use.
> (3) All surface, underground, flood, and atmospheric waters within the boundaries of the state are the property of the state for the use of its people and are subject to appropriation for beneficial uses as provided by law.

Mont. Const. Art. IX, §3. While the Montana Constitution recognizes the need to protect senior appropriators, it also recognizes a policy to promote the development and use of the waters of the state by

the public. This policy is further expressly recognized in the water policy adopted by the Legislature codified at § 85-2-102, MCA, which states in relevant part:

> (1) Pursuant to Article IX of the Montana constitution, the legislature declares that any use of water is a public use and that the waters within the state are the property of the state for the use of its people and are subject to appropriation for beneficial uses as provided in this chapter. . . .
> (3) It is the policy of this state and a purpose of this chapter to encourage the wise use of the state's water resources by making them available for appropriation consistent with this chapter and to provide for the wise utilization, development, and conservation of the waters of the state for the maximum benefit of its people with the least possible degradation of the natural aquatic ecosystems. In pursuit of this policy, the state encourages the development of facilities that store and conserve waters for beneficial use, for the maximization of the use of those waters in Montana . . .

9. Pursuant to § 85-2-302(1), MCA, except as provided in §§ 85-2-306 and 85-2-369, MCA, a person may not appropriate water or commence construction of diversion, impoundment, withdrawal, or related distribution works except by applying for and receiving a permit from the Department. See § 85-2-102(1), MCA. An applicant in a beneficial water use permit proceeding must affirmatively prove all of the applicable criteria in § 85-2-311, MCA. Section § 85-2-311(1) states in relevant part:

> ... the department shall issue a permit if the applicant proves by a preponderance of evidence that the following criteria are met:
> (a) (i) there is water physically available at the proposed point of diversion in the amount that the applicant seeks to appropriate; and
> (ii) water can reasonably be considered legally available during the period in which the applicant seeks to appropriate, in the amount requested, based on the records of the department and other evidence provided to the department. Legal availability is determined using an analysis involving the following factors:
> (A) identification of physical water availability;
> (B) identification of existing legal demands on the source of supply throughout the area of potential impact by the proposed use; and
> (C) analysis of the evidence on physical water availability and the existing legal demands, including but not limited to a comparison of the physical water supply at the proposed point of diversion with the existing legal demands on the supply of water.
> (b) the water rights of a prior appropriator under an existing water right, a certificate, a permit, or a state water reservation will not be adversely affected. In this subsection (1)(b), adverse effect must be determined based on a consideration of an applicant's plan for the exercise of the permit that demonstrates that the applicant's use of the water will be controlled so the water right of a prior appropriator will be satisfied;
> (c) the proposed means of diversion, construction, and operation of the appropriation works are adequate;
> (d) the proposed use of water is a beneficial use;
> (e) the applicant has a possessory interest or the written consent of the person with the possessory interest in the property where the water is to be put to beneficial use, or if the proposed use has a point of diversion, conveyance, or place of use on national forest system lands, the applicant has any written special use authorization required by federal law to occupy, use, or

traverse national forest system lands for the purpose of diversion, impoundment, storage, transportation, withdrawal, use, or distribution of water under the permit;

(f) the water quality of a prior appropriator will not be adversely affected;

(g) the proposed use will be substantially in accordance with the classification of water set for the source of supply pursuant to 75-5-301(1); and

(h) the ability of a discharge permitholder to satisfy effluent limitations of a permit issued in accordance with Title 75, chapter 5, part 4, will not be adversely affected.

(2) The applicant is required to prove that the criteria in subsections (1)(f) through (1)(h) have been met only if a valid objection is filed. A valid objection must contain substantial credible information establishing to the satisfaction of the department that the criteria in subsection (1)(f), (1)(g), or (1)(h), as applicable, may not be met. For the criteria set forth in subsection (1)(g), only the department of environmental quality or a local water quality district established under Title 7, chapter 13, part 45, may file a valid objection.

To meet the preponderance of evidence standard, "the applicant, in addition to other evidence demonstrating that the criteria of subsection (1) have been met, shall submit hydrologic or other evidence, including but not limited to water supply data, field reports, and other information developed by the applicant, the department, the U.S. geological survey, or the U.S. natural resources conservation service and other specific field studies." § 85-2-311(5), MCA (emphasis added). The determination of whether an application has satisfied the § 85-2-311, MCA criteria is committed to the discretion of the Department. Bostwick Properties, Inc. v. Montana Dept. of Natural Resources and Conservation, 2009 MT 181, ¶ 21. The Department is required grant a permit only if the § 85-2-311, MCA, criteria are proven by the applicant by a preponderance of the evidence. Id. A preponderance of evidence is "more probably than not." Hohenlohe v. DNRC, 2010 MT 203, ¶¶33, 35.

10. Pursuant to § 85-2-312, MCA, the Department may condition permits as it deems necessary to meet the statutory criteria:

(1) (a) The department may issue a permit for less than the amount of water requested, but may not issue a permit for more water than is requested or than can be beneficially used without waste for the purpose stated in the application. The department may require modification of plans and specifications for the appropriation or related diversion or construction. The department may issue a permit subject to terms, conditions, restrictions, and limitations it considers necessary to satisfy the criteria listed in 85-2-311 and subject to subsection (1)(b), and it may issue temporary or seasonal permits. A permit must be issued subject to existing rights and any final determination of those rights made under this chapter.

E.g., Montana Power Co. v. Carey (1984), 211 Mont. 91, 96, 685 P.2d 336, 339 (requirement to grant applications as applied for, would result in, "uncontrolled development of a valuable natural resource" which "contradicts the spirit and purpose underlying the Water Use Act."); see also, *In the Matter of Application for Beneficial Water Use Permit No. 65779-76M by Barbara L. Sowers* (DNRC Final Order 1988)(conditions in stipulations may be included if it further compliance with statutory criteria); *In the*

Matter of Application for Beneficial Water Use Permit No. 42M-80600 and Application for Change of Appropriation Water Right No. 42M-036242 by Donald H. Wyrick (DNRC Final Order 1994); Admin. R. Mont. (ARM) 36.12.207.

11. The Montana Supreme Court further recognized in Matter of Beneficial Water Use Permit Numbers 66459-76L, Ciotti: 64988-G76L, Starner (1996), 278 Mont. 50, 60-61, 923 P.2d 1073, 1079, 1080, *superseded by legislation on another issue*:

> Nothing in that section [85-2-313], however, relieves an applicant of his burden to meet the statutory requirements of § 85-2-311, MCA, before DNRC may issue that provisional permit. Instead of resolving doubts in favor of appropriation, the Montana Water Use Act requires an applicant to make explicit statutory showings that there are unappropriated waters in the source of supply, that the water rights of a prior appropriator will not be adversely affected, and that the proposed use will not unreasonably interfere with a planned use for which water has been reserved.

The Court likewise explained that:

> .... unambiguous language of the legislature promotes the understanding that the Water Use Act was designed to protect senior water rights holders from encroachment by junior appropriators adversely affecting those senior rights.

Montana Power Co., 211 Mont. at 97-98, 685 P.2d at 340; see also Mont. Const. art. IX §3(1).

12. An appropriation, diversion, impoundment, use, restraint, or attempted appropriation, diversion, impoundment, use, or restraint contrary to the provisions of § 85-2-311, MCA is invalid. An officer, agent, agency, or employee of the state may not knowingly permit, aid, or assist in any manner an unauthorized appropriation, diversion, impoundment, use, or other restraint. A person or corporation may not, directly or indirectly, personally or through an agent, officer, or employee, attempt to appropriate, divert, impound, use, or otherwise restrain or control waters within the boundaries of this state except in accordance with this § 85-2-311, MCA. § 85-2-311(6), MCA.

13. The Department may take notice of judicially cognizable facts and generally recognized technical or scientific facts within the Department's specialized knowledge, as specifically identified in this document. ARM 36.12.221(4).

Physical Availability

FINDINGS OF FACT

14. The median flow rate and volume records are based on data reports compiled by Kim Hershberger, Montana State University Extension Water Quality. Actual flows were taken approximately one mile upstream from the proposed point of diversion and the intervening legal demands were subtracted from the flow and volume that could be physically available at the

proposed point of diversion. Measurements were taken several times per year using a current meter and then used to establish a rating curve. The rating curve is used with continuous height recorders, either Aquarod or TruTrack. Recorders are downloaded monthly and then tabulated at the end of year to obtain hourly, daily, monthly and yearly averages. The months of November through March were estimates only as no actual flow measurements were taken during these months. These estimates are not supported by any documentation.

15. Figure 1.

FLOW RATE PHYSICALLY AVAILABLE (CFS)	Jan	Feb	Mar	Apr	May	Jun	July	Aug	Sep	Oct	Nov	Dec
Physically available flow at POD	**5***	**5***	**5***	**10.56**	**29.95**	**31.52**	**54.06**	**13.56**	**17.29**	**20.35**	**5***	**5***
VOLUME PHYSICALLY AVAILABLE (AF)	Jan	Feb	Mar	Apr	May	Jun	July	Aug	Sep	Oct	Nov	Dec
Physically available volume at POD	**10***	**10***	**10***	**627**	**1782**	**1865**	**3217**	**807**	**1029**	**1211**	**10***	**10***

*Estimate

16. The Department finds that the requested flow rate of 70 GPM and 40 AF of volume is physically available at the proposed point of diversion during the months of April through October. However there is insufficient evidence supporting the requested flow rate and volume is available during the months of January thru March, November and December.

CONCLUSIONS OF LAW

17. Pursuant to § 85-2-311(1)(a) (i), MCA, an applicant must prove by a preponderance of the evidence that "there is water physically available at the proposed point of diversion in the amount that the applicant seeks to appropriate."

18. It is the applicant's burden to produce the required evidence. *In the Matter of Application for Beneficial Water Use Permit No. 27665-41I by Anson* (DNRC Final Order 1987)(applicant produced no flow measurements or any other information to show the availability of water; permit denied); *In the Matter of Application to Change Water Right No. 41H 1223599 by MGRR #1, LLC.*, (DNRC Final Order 2005).

19. An applicant must prove that at least in some years there is water physically available at the point of diversion in the amount the applicant seeks to appropriate. *In the Matter of Application for Beneficial Water Use Permit No. 72662s76G by John Fee and Don Carlson* (DNRC Final Order 1990); *In the Matter of Application for Beneficial Water Use Permit No. 85184s76F by Wills Cattle Co. and Ed McLean* (DNRC Final Order 1994).

20. The Applicant has not proven that water is physically available at the proposed point of diversion in the amount Applicant seeks to appropriate. § 85-2-311(1)(a)(i), MCA. (FOF 13-15)

Legal Availability:

FINDINGS OF FACT

21. An index of existing downstream legal demands was provided which includes all of Muddy Creek from the proposed point of diversion downstream to Spring Coulee (approximately 6 miles) which is a major contributor of inflows to Muddy Creek from the Greenfields Irrigation District.

22. The following tables include a comparison of physical water availability and legal availability on the source of supply during the requested period of diversion:

Figure 2.

Muddy Creek at Point of Diversion (POD)	Jan	Feb	Mar	Apr	May	Jun	July	Aug	Sep	Oct	Nov	Dec
Flow Available at POD (CFS)	5	5	5	**10.56**	**29.95**	**31.52**	**54.06**	**13.56**	**17.29**	**20.35**	5	5
Other prior users (CFS)	50	50	50	56.5	56.5	56.5	56.5	56.5	56.5	50	50	50
Legal Availability at POD (CFS)	**-45**	**-45**	**-45**	**-45.9**	**-26.55**	**-24.98**	**-2.44**	**-42.94**	**-39.21**	**-29.65**	**-45**	**-45**

Muddy Creek at Point of Diversion (POD)	Jan	Feb	Mar	Apr	May	Jun	July	Aug	Sep	Oct	Nov	Dec
Volume Available at POD (AF)	**10**	**10**	**10**	**627**	**1782**	**1865**	**3217**	**807**	**1029**	**1211**	**10**	**10**
Other prior users (AF)	1217	1217	1217	1217	1616	1603	1616	1616	1603	1217	1217	1217
Legal Availability at POD (AF)	**-1207**	**-1207**	**-1207**	**-590**	**166**	**262**	**1601**	**-809**	**-574**	**-1207**	**-1207**	**-1207**

23. The Applicant identified legal demands of 6.5 CFS up to a highest monthly volume of 399 AF in its legal availability analysis. The Applicant did not include US Fish and Wildlife Services' (USFW) Statement of Claim (SOC) 41K 188174-00 located within the identified reach. The omission occurred because it is the Applicant's understanding, USFW does not divert during the Applicant's requested period of diversion due to the high turbidity found in Muddy Creek. SOC 41K 188174-00 claims a year round period of diversion for 50 CFS up to 1,217 AF per month. The flow rate and volume of this claim is considered a legal demand and is therefore included in the table (Figure 2).

24. The Applicant has failed to show that the USFW water right should not be included in legal availability calculations.

25. The proposed source of supply which is Muddy Creek is in the Upper Missouri Basin Closure which provides that the Department may not grant an application for a permit to appropriate

water in Upper Basin until the final decrees for all basins within the Upper Basin have been issued, subject to certain exceptions. Muddy Creek has a specific exception applying to it. That exception states that the closure does not apply to "an application for a permit to use water from the Muddy Creek drainage, which drains to the Sun River, if the proposed use of water will help control erosion in the Muddy Creek drainage." (§85-2-434, MCA)

26. Flows in Muddy Creek are artificially high due to waste flows and return flows from the Greenfields Irrigation District. Historically (1934 – 1950), average monthly mean flows in Muddy Creek would range from around 25 CFS in mid-winter to as high as almost 200 CFS in August – September. Most times the flow was below 150 CFS. After development of the Greenfields Irrigation District average monthly mean flows in Muddy Creek would range from around 25 CFS in the winter to 300 – 350 CFS from June through September. Flows would be above 150 CFS from mid May through as late as mid October. (See *In the Matter of the Application for Beneficial Water Use Permit 41K-30045713 by Nicholas D. Konen* (Final Order – July 25, 2011)

27. Muddy Creek has experienced extensive erosion since the development of the Greenfields Irrigation District due in large part to the increase in flows from the waste-ways and return flows in the District's system. Current mean monthly flows in Muddy Creek near Vaughn remain above 150 CFS from May through August ranging from 175.4 CFS in May to a high of 309.6 CFS in July. (See *In the Matter of the Application for Beneficial Water Use Permit 41K-30045713 by Nicholas D. Konen* (Final Order – July 25, 2011)

28. The extensive erosion in the Muddy Creek drainage has caused measured annual sediment yields in Muddy Creek near Vaughn to be as high as 60,000 tons per year. In more recent years (1997 – 2003) sediment production near Vaughn has been in the 30,000 to 40,000 tons per year range. The sediment production from Muddy Creek has been trending lower during this period. Sedimentation problems extend into the Sun River and downstream on the Missouri River. (See *In the Matter of the Application for Beneficial Water Use Permit 41K-30045713 by Nicholas D. Konen* (Final Order – July 25, 2011)

29. The SRWG was formed around 1993 to address the issue of erosion and sediment production from Muddy Creek. The SRWG includes many partners including landowners, the Bureau of Reclamation, DNRC, U.S. Fish and Wildlife Service, Montana Department of Fish, Wildlife and Parks, and PPL. The SRWG developed a multi-faceted approach to the erosion problem including

stream bank rock work, riparian improvements, irrigation water management, and flow reduction. Flow reduction is a critical component of the reduction strategy. (See *In the Matter of the Application for Beneficial Water Use Permit 41K-30045713 by Nicholas D. Konen* (Final Order – July 25, 2011)

30. An agreement was made by the members of the SRWG that keeping flows in Muddy Creek at Vaughn at or below 150 CFS was the appropriate "flow trigger" to prevent further adverse erosion in Muddy Creek and subsequent sediment production downstream. (See *In the Matter of the Application for Beneficial Water Use Permit 41K-30045713 by Nicholas D. Konen* (Final Order – July 25, 2011)

31. In 1997 the Montana Legislature amended into 85-2-343, MCA, an exception for Muddy Creek. The amendment related to allowing applications for surface water beneficial use permits from Muddy Creek if the appropriation will help control erosion in the Muddy Creek drainage. (83-2-343(2)(e), MCA)

32. PPL is the owner of a water right on the Missouri River at Morony Dam of 8,280 CFS. This water right is met when the sum of two upstream gauges (located on the Missouri River and Sun River exceeds 7,880 CFS and accounting for the contribution of water to the Missouri River from the Giant Springs complex. As a result some water permits have been granted upstream of Morony Dam subject to the "PPL Condition". (See *In the Matter of the Application for Beneficial Water Use Permit 41K-30045713 by Nicholas D. Konen* (Final Order – July 25, 2011)

33. A review of the legislative history of the Muddy Creek exception shows that the legislative intent was to allow an *application* for the use of surface water from Muddy Creek, but not necessarily the granting of a permit. The legislature clearly intended that the exception was not a change in the water right permitting process and that all of the criteria for issuance of a permit (under 85-2-311, MCA) would need to be met for such issuance.

34. One of the criteria for issuance of a permit under 85-2-311, MCA is a showing that water is legally available during the period in which the applicant seeks to appropriate, in the amount requested, based on the records of the department and other evidence provided to the department. (85-2-311(1)(a)(ii), MCA)

35. A 1997 study conducted by the Department shows that stream flows rarely occur above the water right legal demands (including the PPL water rights) above Cochrane Dam 1) during very wet

Aprils (one year in ten); 2) during average and above average months in May and June (5 years in ten); and 3) during very wet months of July (one year in ten). The results for Morony Dam are similar to Cochrane Dam except stream flows exceed the Morony Dam water rights. (See *In the Matter of the Application for Beneficial Water Use Permit 41K-30045713 by Nicholas D. Konen* (Final Order – July 25, 2011)

36. 2 years in ten during March, April and July of wet years. Flows rarely occur above the water right legal demand during the other eight months from August through March. (See *In the Matter of the Application for Beneficial Water Use Permit 41K-30045713 by Nicholas D. Konen* (Final Order – July 25, 2011)

37. Whereas the proposed project is located within the legislatively-created Upper Missouri River Basin Closure area pursuant to §MCA 85-2-343. The primary reason for the Upper Missouri Closure is due to large hydropower water rights owned by PPL, LLC at several dams in the basin. The single largest water right owned by PPL, LLC is at Cochrane Dam near Great Falls (downstream of the Sun River and proposed appropriation) at 10,000 CFS. According to a previous Department hydrologic study, streamflows greater than appropriations claimed by prior water rights in the Upper Missouri Basin, including the PPL water right, generally occur upstream of Cochrane Dam in the following circumstances: 1) during very wet Aprils (10th percentile flow or at least one year in ten); 2) during average and above average months in May and June (50th percentile flow or at least 5 years in ten); and 3) during very wet months of July (10th percentile flow or at least one year in ten). Flows rarely occur above the water right legal demand during the other eight months from August through March. Upper Missouri Water Availability Analysis, MT Dept. of Natural Resources and Conservation, December 1997.

38. The proposed use of water for municipal use will be in a manner that will diminish the quantity of water, will cause a change in the timing of flows, and will change the location of the discharge. Based upon current flow records, there are inadequate flows available to satisfy USFW senior water right legal demand, located downstream of the proposed point of diversion. The project will cause a new depletion and therefore create an adverse effect.

39. The Department finds that the requested flow rate of 70 GPM up to 40 AF is not legally available.

CONCLUSIONS OF LAW

40. Pursuant to § 85-2-311(1)(a), MCA, an applicant must prove by a preponderance of the evidence that:

(ii) water can reasonably be considered legally available during the period in which the applicant seeks to appropriate, in the amount requested, based on the records of the department and other evidence provided to the department. Legal availability is determined using an analysis involving the following factors:

(A) identification of physical water availability;

(B) identification of existing legal demands on the source of supply throughout the area of potential impact by the proposed use; and

(C) analysis of the evidence on physical water availability and the existing legal demands, including but not limited to a comparison of the physical water supply at the proposed point of diversion with the existing legal demands on the supply of water.

E.g., ARM 36.12.101 and 36.12.120; Montana Power Co., 211 Mont. 91, 685 P.2d 336 (Permit granted to include only early irrigation season because no water legally available in late irrigation season); *In the Matter of Application for Beneficial Water Use Permit No. 81705-g76F by Hanson* (DNRC Final Order 1992).

41. It is the applicant's burden to present evidence to prove water can be reasonably considered legally available. Sitz Ranch v. DNRC, DV-10-13390, Fifth Judicial District Court, *Order Affirming DNRC Decision*, (2011) Pg. 7 (the legislature set out the criteria (§ 85-2-311, MCA) and placed the burden of proof squarely on the applicant. The Supreme Court has instructed that those burdens are exacting.); see also Matter of Application for Change of Appropriation Water Rights Nos. 101960-41S and 101967-41S by Royston (1991), 249 Mont. 425, 816 P.2d 1054 (burden of proof on applicant in a change proceeding to prove required criteria); *In the Matter of Application to Change Water Right No. 41H 1223599 by MGRR #1, LLC.*, (DNRC Final Order 2005))(it is the applicant's burden to produce the required evidence.); *In the Matter of Application for Beneficial Water Use Permit No. 41H 30023457 by Utility Solutions, LLC* (DNRC Final Order 2007)(permit denied for failure to prove legal availability); see also ARM 36.12.1705.

42. Applicant provided incomplete evidence showing existing legal demands and did not show that water is physically available in a manner that can be compared with existing legal demands. Applicant did not identify all existing legal demands. *In the Matter of Application for Beneficial Water Use Permit No. 43D 10220900 by Sam McDowell (DNRC Final Order 2007).*

43. The Applicant has not proven by a preponderance of the evidence that surface water can reasonably be considered legally available during the period in which the applicant seeks to appropriate, in the amount requested based on Applicant's proposal. (FOF 20-38)

Adverse Effect

FINDINGS OF FACT

44. Where the Department previously found that water is not legally available for the proposed new use, any additional appropriation of water from Muddy Creek would in fact create an adverse effect to downstream prior existing rights.

45. The Applicant has a plan for the exercise of the permit that demonstrates that the Applicant's use of water can be controlled so the water rights of a prior appropriator will be satisfied. The Applicant proposes to reduce or restrict the use of water for uses such lawn and garden irrigation or cease diverting water completely upon call of water. Domestic water would then have to be hauled in from an off-site location. This proposed appropriation will divert water with an electric pump, and therefore, in the event a call is made, this appropriation can be stopped by turning off the electricity to the pump.

46. The Department finds that any new consumptive use such as this application's proposed new use located upstream of the confluence of the Sun River would create an adverse effect on other water users downstream of proposed point of diversion.

CONCLUSIONS OF LAW

47. Pursuant to § 85-2-311(1)(b), MCA, the Applicant bears the affirmative burden of proving by a preponderance of the evidence that the water rights of a prior appropriator under an existing water right, a certificate, a permit, or a state water reservation will not be adversely affected. Analysis of adverse effect must be determined based on a consideration of an applicant's plan for the exercise of the permit that demonstrates that the applicant's use of the water will be controlled so the water right of a prior appropriator will be satisfied. See Montana Power Co. (1984), 211 Mont. 91, 685 P.2d 336 (purpose of the Water Use Act is to protect senior appropriators from encroachment by junior users).

48. An applicant must analyze the full area of potential impact under the § 85-2-311, MCA criteria. *In the Matter of Beneficial Water Use Permit No. 76N-30010429 by Thompson River Lumber Company* (DNRC Final Order 2006). While § 85-2-361, MCA, limits the boundaries expressly required for compliance with the hydrogeologic assessment requirement, an applicant is required

to analyze the full area of potential impact for adverse effect in addition to the requirement of a hydrogeologic assessment. Id. ARM 36.12.120(8).

49. Applicant must prove that no prior appropriator will be adversely affected, not just the objectors. Sitz Ranch v. DNRC, DV-10-13390, Fifth Judicial District Court, *Order Affirming DNRC Decision, (2011) Pg. 4.*

50. In analyzing adverse effect to other appropriators, an applicant may use the water rights claims of potentially affected appropriators as evidence of their "historic beneficial use." See Matter of Application for Change of Appropriation Water Rights Nos. 101960-41S and 101967-41S by Royston (1991), 249 Mont. 425, 816 P.2d 1054.

51. It is the applicant's burden to produce the required evidence. E.g., Sitz Ranch v. DNRC, DV-10-13390, Fifth Judicial District Court, Order Affirming DNRC Decision, (2011) Pg. 7 (legislature has placed the burden of proof squarely on the applicant); In the Matter of Application to Change Water Right No. 41H 1223599 by MGRR #1, LLC., (DNRC Final Order 2005). (DNRC Final Order 2005). The Department is required to grant a permit only if the § 85-2-311, MCA, criteria are proven by the applicant by a preponderance of the evidence. Bostwick Properties, Inc. ¶ 21.

52. Section 85-2-311 (1)(b) of the Water Use Act does not contemplate a de minimis level of adverse effect on prior appropriators. Wesmont Developers v. DNRC, CDV-2009-823, First Judicial District Court, Memorandum and Order, (2011) Pg. 8.

53. The Applicant has not proven by a preponderance of the evidence that the water rights of a prior appropriator under an existing water right, a certificate, a permit, or a state water reservation will not be adversely affected. § 85-2-311(1)(b), MCA. (FOF 44-46)

Adequate Diversion

FINDINGS OF FACT

54. Water will be diverted from the source via a 5 HP pump to pull water from Muddy Creek where it will make its way through a filtration system and into a 30,000 gallon tank. From there it will be pumped to Power residents and to a 150,000 gallon storage tank for use when demand is larger than available.

55. The Town of Power water system has been using water from Muddy Creek since March 1970 through a Bureau of Reclamation contract.

56. The basic infrastructure from the point of diversion to the Town of Power is in place and has been operational since March 1970. The proposed construction of a conveyance pipe from the existing 30,000 gallon storage tank to the new 150,000 storage tank will be additions to the existing infrastructure.

57. The Department finds that the means of diversion are adequate.

CONCLUSIONS OF LAW

58. Pursuant to § 85-2-311(1)(c), MCA, an Applicant must demonstrate that the proposed means of diversion, construction, and operation of the appropriation works are adequate. The adequate means of diversion statutory test merely codifies and encapsulates the case law notion of appropriation to the effect that the means of diversion must be reasonably effective, i.e., must not result in a waste of the resource. *In the Matter of Application for Beneficial Water Use Permit No. 33983s41Q by Hoyt* (DNRC Final Order 1981); § 85-2-312(1)(a), MCA.

59. Applicant has proven by a preponderance of the evidence that the proposed means of diversion, construction, and operation of the appropriation works are adequate for the proposed beneficial use. (FOF 54-57).

Beneficial Use

FINDINGS OF FACT

60. The Town of Power water system is the only source of clean water for this small community of approximately 85 households. The water system is currently in use and has been since March 1970 for municipal use.

61. The total system flow rate of 70 GPM was determined by calculating the flow rate necessary to satisfy the expected peak volume demand during the month of July, the month of highest demand. The requested flow rate of 70 GPM is reasonable and necessary for the intended purpose.

62. The municipal demand was calculated by using the maximum historical metered water at the Power water treatment plant at a volume of .43AF/year per household. This amount of 0.43 AF/yr for each household is less than the 1 AF/yr standard recognized by DNRC for domestic purposes (ARM 36.12.115). Therefore the requested maximum volume of 40 AF or .47AF per household is necessary and reasonable for municipal use.

CONCLUSIONS OF LAW

63. An appropriator may appropriate water only for a beneficial use. See also, § 85-2-301 MCA. It is a fundamental premise of Montana water law that beneficial use is the basis, measure, and limit of the use. E.g., McDonald, supra; Toohey v. Campbell (1900), 24 Mont. 13, 60 P. 396. The

amount of water under a water right is limited to the amount of water necessary to sustain the beneficial use. E.g., Bitterroot River Protective Association v. Siebel, Order on Petition for Judicial Review, Cause No. BDV-2002-519, Montana First Judicial District Court, Lewis and Clark County (2003), affirmed on other grounds, 2005 MT 60, 326 Mont. 241, 108 P.3d 518; In The Matter Of Application For Beneficial Water Use Permit No. 43C 30007297 by Dee Deaterly (DNRC Final Order), affirmed other grounds, Dee Deaterly v. DNRC et al, Cause No. 2007-186, Montana First Judicial District, Order Nunc Pro Tunc on Petition for Judicial Review (2009); Worden v. Alexander (1939), 108 Mont. 208, 90 P.2d 160; Allen v. Petrick (1924), 69 Mont. 373, 222 P. 451; In the Matter of Application for Beneficial Water Use Permit No. 41S-105823 by French (DNRC Final Order 2000).

64. Amount of water to be diverted must be shown precisely. Sitz Ranch v. DNRC, DV-10-13390, Fifth Judicial District Court, Order Affirming DNRC Decision, (2011) Pg. 3 (citing BRPA v. Siebel, 2005 MT 60, and rejecting applicant's argument that it be allowed to appropriate 800 acre-feet when a typical year would require 200-300 acre-feet).

65. Applicant proposes to use water for Municipal use which is a recognized beneficial use. § 85-2-102(4), MCA. If this is a domestic use that also has lawn and garden use the following Applicant proposes to use water for domestic use (which includes garden and landscaping irrigation, also commonly referred to as 'lawn and garden irrigation') which is a recognized beneficial use. § 85-2-102(4), MCA. "Domestic use" by DNRC rule means those water uses common to a household including: … (g) garden and landscaping irrigation up to five acres." ARM 36.12.101(21). Applicant has proven by a preponderance of the evidence Municipal use is a beneficial use and that 40AF of diverted volume and 70 GPM of water requested is the amount needed to sustain the beneficial use. § 85-2-311(1)(d), MCA,

Possessory Interest

FINDINGS OF FACT

66. The applicant provided proof of possessory interest in the form of a copy of the Certificate of Incorporation identifying the service area for Power Teton County Water and Sewer district service area shall be the town of Power.

CONCLUSIONS OF LAW

67. Pursuant to § 85-2-311(1)(e), MCA, an Applicant must prove by a preponderance of the evidence that it has a possessory interest or the written consent of the person with the possessory interest in the property where the water is to be put to beneficial use, or if the proposed use has a point of diversion, conveyance, or place of use on national forest system lands, the applicant has any written special use authorization required by federal law to occupy, use, or traverse national forest system lands for the purpose of diversion, impoundment, storage, transportation, withdrawal, use, or distribution of water under the permit.

68. Pursuant to ARM 36.12.1802:

(1) An applicant or a representative shall sign the application affidavit to affirm the following:
(a) the statements on the application and all information submitted with the application are true and correct and
(b) except in cases of an instream flow application, or where the application is for sale, rental, distribution, or is a municipal use, or in any other context in which water is being supplied to another and it is clear that the ultimate user will not accept the supply without consenting to the use of water on the user's place of use, the applicant has possessory interest in the property where the water is to be put to beneficial use or has the written consent of the person having the possessory interest.
(2) If a representative of the applicant signs the application form affidavit, the representative shall state the relationship of the representative to the applicant on the form, such as president of the corporation, and provide documentation that establishes the authority of the representative to sign the application, such as a copy of a power of attorney.
(3) The department may require a copy of the written consent of the person having the possessory interest.

69. The Applicant has proven by a preponderance of the evidence that it has a possessory interest, or the written consent of the person with the possessory interest, in the property where the water is to be put to beneficial use. § 85-2-311(1)(e), MCA. (FOF 64)

PRELIMINARY DETERMINATION

Subject to the terms, analysis, and conditions in this Order, the Department preliminarily determines that due to inadequate physical availability, legal availability, and adverse affects on existing water users this Application for Beneficial Water Use Permit No. 41K 30049120 is **DENIED**.

DATED.....

_____

Kraig VanVoast, Deputy Regional Manager
Havre Water Resources Office
Department of Natural Resources and Conservation

Table 5. Annual amounts of pumped water, natural runoff, and selenium entering Benton Lake, 1970–2012.

Year	*Pumped water (acre-feet)*	*Runoff (acre-feet)*	*Estimated pumped selenium (pounds)*	*Estimated natural selenium (pounds)*	*Total estimated selenium (pounds)*
1970	3,670	3,000	50	122	172
1971	6,371	0	87	0	87
1972	9,079	990	123	40	164
1973	6,643	0	90	0	90
1974	5,897	334	80	14	94
1975	0	13,933	0	568	568
1976	2,978	400	40	16	57
1977	4,167	0	57	0	57
1978	0	19,200	0	783	783
1979	68	12,100	1	493	494
1980	2,000	1,100	27	45	72
1981	3,650	500	50	20	70
1982	3,037	4,132	41	168	210
1983	2,822	1,763	38	72	110
1984	4,790	1,947	65	79	144
1985	6,380	1,157	87	47	134
1986	3,376	4,759	46	194	240
1987	7,987	350	109	14	123
1988	7,517	208	102	8	111
1989	212	9,710	3	396	399
1990	4,797	1,056	65	43	108
1991	8,028	943	109	38	148
1992	7,276	21	99	1	100
1993	1,932	3,049	26	124	151
1994	5,800	227	79	9	88
1995	5,555	344	76	14	90
1996	3,969	846	54	34	88
1997	4,430	2,245	60	92	152
1998	5,693	622	77	25	103
1999	5,033	122	68	5	73
2000	5,385	54	73	2	75
2001	5,082	51	69	2	71
2002	3,975	610	54	25	79
2003	3,868	4	53	0	53
2004	3,985	73	54	3	57
2005	2,730	422	37	17	54
2006	3,951	827	54	34	87
2007	3,542	486	48	20	68
2008	4,204	673	57	27	85
2009	4,866	1,730	66	71	137

Table 3. Annual amounts of pumped water, natural runoff, and selenium entering Benton Lake, 1970–2012.

Year	*Pumped water (acre-feet)*	*Runoff (acre-feet)*	*Estimated pumped selenium (pounds)*	*Estimated natural selenium (pounds)*	*Total estimated selenium (pounds)*
2010	3,069	3,433	42	140	182
2011	1,554	10,282	21	419	440
2012	2,550	83	35	3	38
Mean	4,231	2,414	58	98	156
Median	4,076	750	57	31	100
Total	179,368	103,703	2,438	4,228	6,666

Unpublished records on file at Benton Lake Refuge; Nimick et al. 1996.

Benton Lake Wetland Management District

In 1996, a survey of contaminants from 10 sites within the district was conducted to find out if trace elements were accumulating in either sediment or aquatic food chain of wetlands (Gilbert et al. 1996). Elevated levels of lead, boron, and selenium were detected in several locations. The concentrations did not appear to pose an immediate threat to wildlife resources but continued monitoring was recommended. Given the alkaline nature of many of soils in the district and the fact that evaporation can exceed precipitation, the potential for accumulation of toxins in wetland basins, particularly sediments that do not dry out, deserves further attention.

Blackfoot Valley Conservation Area

The Blackfoot River, from the headwaters downstream to Landers Fork, shows varying levels of mine-related impairment. Water quality data show that the upstream part of this stream segment rou-tinely exceeds numeric water quality criteria for the metals cadmium, copper, iron, lead, and zinc. Metals concentrations decrease in the downstream direction to the point where exceedences of metals-related numeric water quality criteria typically occur only during high flows. Water quality data from Blackfoot River from Landers Fork to Nevada Creek, occa-sionally exceed numeric water quality criteria dur-ing high flows for cadmium, iron, aluminum, and zinc. Sources of metals-related impairment and acidity in the upper river segments are associated with the Upper Blackfoot Mining Complex. Reclamation activities, including restoration strategies for met-als-impaired segments of the Blackfoot River, rely on implementation of water quality restoration commit-ments from the Upper Blackfoot Mining Complex.

In 2005, a basin-wide restoration action plan for the Blackfoot River watershed was completed. This action plan serves as a guiding document to identify, rank, and plan for the implementation of restoration projects in the Blackfoot River watershed.

Rocky Mountain Front Conservation Area

Watersheds in the Rocky Mountain Front include the Sun River, Teton River, and Dearborn River. The Sun River watershed is connected to the Teton River watershed via human-built canals and irriga-tion works.

Sun River Watershed

The Sun River watershed spans several land types, from the forested headwaters in the Rocky Moun-tain wilderness to the prairies at its confluence with the Missouri River near the city of Great Falls, Mon-tana. Agricultural land use dominates the water-shed. The links between water quality, land use, and the natural variability of land types in the watershed are complex. Potentially impaired waters identified by the State of Montana in the Sun River watershed are Ford Creek, Gibson Reservoir, Willow Creek Reservoir, upper Sun River, lower Sun River, Freez-eout Lake, and Muddy Creek.

The upper Sun River was identified as impaired on Montana's 2000 and 2002 lists of impaired water-bodies because of excess nutrients. This segment is approximately 80 miles long and runs from Gibson Dam to Muddy Creek. Landowners, local water-shed organizations, and many Federal, State, and local government agencies collaborated to carry out agricultural best management practices in the up-per Sun River and its tributaries. Water quality improved as a result, allowing the Montana Depart-ment of Environmental Quality to remove the upper Sun River from the list for nutrients in 2006. The Sun River watershed project is a classic example of using the watershed approach to address nonpoint source pollution (EPA 2012).

APPENDIX 2 - E

USGS Muddy Creek Flows

Power-Teton County Water and Sewer District Water System PER
Spring 2018
Average Monthly Flows

Date	Monthly Average Flow Rate (CFS)
January-15	74.71
February-15	45.86
March-15	33.58
April-15	25.15
May-15	193.22
June-15	188.86
July-15	312.93
August-15	173.68
September-15	113.50
October-15	90.21
November-15	57.32
December-15	ICE
January-16	ICE
February-16	36.29
March-16	28.03
April-16	30.39
May-16	177.70
June-16	230.82
July-16	261.02
August-16	151.72
September-16	117.23
October-16	77.01
November-16	49.43
December-16	ICE
January-17	ICE
February-17	ICE
March-17	29.70
April-17	30.32
May-17	119.56
June-17	273.19
July-17	295.42
August-17	249.29
September-17	125.55
October-17	101.70
November-17	70.85
December-17	ICE

Minimum	**25.1**
Maximum	**312.9**

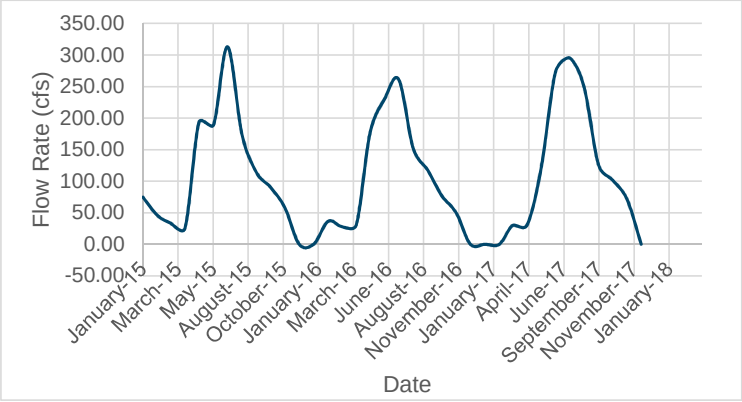

Power-Teton County Water and Sewer District Water System PER
Spring 2018
Water Rights Resictrion Analysis

2015	Flow (cfs)	Restriction (cfs)	Able to Divert?
1-Apr	27.25313		YES
2-Apr	27.12708		YES
3-Apr	28.02083		YES
4-Apr	28.12083		YES
5-Apr	28.34583		YES
6-Apr	28.53958	47.55	NO
7-Apr	29.82188	47.55	NO
8-Apr	28.50729	47.55	NO
9-Apr	27.66979	47.55	NO
10-Apr	27.18854	47.55	NO
11-Apr	25.97813	47.55	NO
12-Apr	24.94479	47.55	NO
13-Apr	25.31667	47.55	NO
14-Apr	25.70313	47.55	NO
15-Apr	29.56875	47.55	NO
16-Apr	26.28229	47.55	NO
17-Apr	25.12083	47.55	NO
18-Apr	25.2	47.55	NO
19-Apr	26.75104	47.55	NO
20-Apr	25.67917	47.55	NO
21-Apr	24.46458	47.55	NO
22-Apr	23.73542	47.55	NO
23-Apr	22.62396	47.55	NO
24-Apr	21.3625	47.55	NO
25-Apr	21.94583	47.55	NO
26-Apr	21.69583	47.55	NO
27-Apr	21.74583	47.55	NO
28-Apr	20.58646	47.55	NO
29-Apr	17.90521	47.55	NO
30-Apr	17.25833	47.55	NO
1-May	26.25521	47.55	NO
2-May	124.901	47.55	YES
3-May	159.7083	47.55	YES
4-May	115.0417	47.55	YES
5-May	128.9688	47.55	YES
6-May	145.1146	47.55	YES
7-May	157.5938	47.55	YES
8-May	207.8333	47.55	YES
9-May	232.2083	47.55	YES
10-May	181.3438	47.55	YES
11-May	215.5625	47.55	YES
12-May	210.1563	47.55	YES
13-May	189.6354	47.55	YES
14-May	212.9688	47.55	YES
15-May	234.3542	47.55	YES

2016	Flow (cfs)	Restriction (cfs)	Able to Divert?
1-Apr	27.63958		YES
2-Apr	25.71875		YES
3-Apr	24.21667		YES
4-Apr	24.38125		YES
5-Apr	24.64583		YES
6-Apr	23.68333	47.55	NO
7-Apr	22.45	47.55	NO
8-Apr	22.475	47.55	NO
9-Apr	21.28333	47.55	NO
10-Apr	20.43438	47.55	NO
11-Apr	20.47813	47.55	NO
12-Apr	20.42813	47.55	NO
13-Apr	23.59167	47.55	NO
14-Apr	22.72292	47.55	NO
15-Apr	32.99479	47.55	NO
16-Apr	39.88333	47.55	NO
17-Apr	53.53229	47.55	YES
18-Apr	50.42396	47.55	YES
19-Apr	40.58229	47.55	NO
20-Apr	38.125	47.55	NO
21-Apr	37.62917	47.55	NO
22-Apr	34.53854	47.55	NO
23-Apr	32.84167	47.55	NO
24-Apr	40.75208	47.55	NO
25-Apr	34.65521	47.55	NO
26-Apr	31.09271	47.55	NO
27-Apr	29.64063	47.55	NO
28-Apr	30.68646	47.55	NO
29-Apr	31.55104	47.55	NO
30-Apr	28.58437	47.55	NO
1-May	27.6375	47.55	NO
2-May	25.62187	47.55	NO
3-May	23.76458	47.55	NO
4-May	22.88854	47.55	NO
5-May	88.07813	47.55	YES
6-May	138.9708	47.55	YES
7-May	134.1917	47.55	YES
8-May	196.0833	47.55	YES
9-May	213.7708	47.55	YES
10-May	200.3229	47.55	YES
11-May	158.6563	47.55	YES
12-May	150.9375	47.55	YES
13-May	200.5	47.55	YES
14-May	201.7813	47.55	YES
15-May	185.1354	47.55	YES

	2017	Flow (cfs)	Restriction (cfs)	Able to Divert?
	1-Apr	26.8375		YES
	2-Apr	26.53021		YES
	3-Apr	25.65833		YES
	4-Apr	26.43333		YES
	5-Apr	25.73229		YES
	6-Apr	25.24167	47.55	NO
	7-Apr	25.34583	47.55	NO
	8-Apr	25.44271	47.55	NO
	9-Apr	37.13229	47.55	NO
	10-Apr	45.04167	47.55	NO
	11-Apr	33.95313	47.55	NO
	12-Apr	28.85833	47.55	NO
	13-Apr	28.34167	47.55	NO
	14-Apr	39.61979	47.55	NO
	15-Apr	33.37604	47.55	NO
	16-Apr	27.84688	47.55	NO
	17-Apr	27.19167	47.55	NO
	18-Apr	28.15	47.55	NO
	19-Apr	26.56875	47.55	NO
	20-Apr	25.50833	47.55	NO
	21-Apr	31.525	47.55	NO
	22-Apr	32.7875	47.55	NO
	23-Apr	29.25313	47.55	NO
	24-Apr	29.8375	47.55	NO
	25-Apr	29.91146	47.55	NO
	26-Apr	40.67396	47.55	NO
	27-Apr	35.35	47.55	NO
	28-Apr	32.57083	47.55	NO
	29-Apr	30.12292	47.55	NO
	30-Apr	28.78021	47.55	NO
	1-May	27.90208	47.55	NO
	2-May	28.00833	47.55	NO
	3-May	27.39896	47.55	NO
	4-May	25.84063	47.55	NO
0	5-May	24.59063	47.55	NO
	6-May	22.90208	47.55	NO
	7-May	25.67396	47.55	NO
	8-May	27.60625	47.55	NO
	9-May	25.35313	47.55	NO
	10-May	24.03333	47.55	NO
	11-May	23.1625	47.55	NO
	12-May	22.7375	47.55	NO
	13-May	93.83958	47.55	YES
	14-May	106.0698	47.55	YES
	15-May	166.3958	47.55	YES

16-May	231.75	48.84	YES
17-May	278.3125	48.84	YES
18-May	249.4375	48.84	YES
19-May	216.9583	48.84	YES
20-May	214.6875	48.84	YES
21-May	187.8333	48.84	YES
22-May	185.4063	48.84	YES
23-May	177.0833	48.84	YES
24-May	189.8438	48.84	YES
25-May	187.875	48.84	YES
26-May	202.4792	48.84	YES
27-May	194.8958	48.84	YES
28-May	219.9063	48.84	YES
29-May	249.4583	48.84	YES
30-May	229.1875	48.84	YES
31-May	233.1667	48.84	YES
1-Jun	211.2396	48.84	YES
2-Jun	217.8854	48.84	YES
3-Jun	260.2604	48.84	YES
4-Jun	239.8646	48.84	YES
5-Jun	223.1979	48.84	YES
6-Jun	192.9271	48.84	YES
7-Jun	186.8854	48.84	YES
8-Jun	197.2708	48.84	YES
9-Jun	171.3854	48.84	YES
10-Jun	160.9271	48.84	YES
11-Jun	179.3229	48.84	YES
12-Jun	178.5729	48.84	YES
13-Jun	150.75	48.84	YES
14-Jun	131.25	48.84	YES
15-Jun	140.8021	48.84	YES
16-Jun	130.0938	48.84	YES
17-Jun	114.7396	48.84	YES
18-Jun	144.8542	48.84	YES
19-Jun	173.5104	48.84	YES
20-Jun	167.7813	48.84	YES
21-Jun	160.1354	48.84	YES
22-Jun	187.4896	48.84	YES
23-Jun	176.3229	48.84	YES
24-Jun	186.0417	48.84	YES
25-Jun	199.0625	48.84	YES
26-Jun	211.3229	48.84	YES
27-Jun	256.6042	48.84	YES
28-Jun	224.5938	48.84	YES
29-Jun	254.8125	48.84	YES
30-Jun	235.8854	48.84	YES
1-Jul	226.4896	48.84	YES
2-Jul	206.9375	48.84	YES
3-Jul	205.1042	48.84	YES
4-Jul	214.7396	48.84	YES

16-May	230.5833	48.84	YES
17-May	211.7292	48.84	YES
18-May	197.1667	48.84	YES
19-May	199.4688	48.84	YES
20-May	241.3438	48.84	YES
21-May	260.125	48.84	YES
22-May	293.1875	48.84	YES
23-May	256.2083	48.84	YES
24-May	243.1458	48.84	YES
25-May	224.4063	48.84	YES
26-May	220.7708	48.84	YES
27-May	219.6563	48.84	YES
28-May	194.3021	48.84	YES
29-May	174.7917	48.84	YES
30-May	173.7813	48.84	YES
31-May	199.7917	48.84	YES
1-Jun	174.5313	48.84	YES
2-Jun	182.4271	48.84	YES
3-Jun	203.2292	48.84	YES
4-Jun	207.2188	48.84	YES
5-Jun	134.375	48.84	YES
6-Jun	170.9896	48.84	YES
7-Jun	143.3542	48.84	YES
8-Jun	138.75	48.84	YES
9-Jun	140.2917	48.84	YES
10-Jun	138.5313	48.84	YES
11-Jun	142	48.84	YES
12-Jun	187.2813	48.84	YES
13-Jun	224.5625	48.84	YES
14-Jun	252.0625	48.84	YES
15-Jun	268.2292	48.84	YES
16-Jun	283.2604	48.84	YES
17-Jun	258.5313	48.84	YES
18-Jun	299.2917	48.84	YES
19-Jun	268.3021	48.84	YES
20-Jun	285.5934	48.84	YES
21-Jun	265.2292	48.84	YES
22-Jun	284.1563	48.84	YES
23-Jun	269.5	48.84	YES
24-Jun	267.9167	48.84	YES
25-Jun	296.5625	48.84	YES
26-Jun	273.1771	48.84	YES
27-Jun	328.3021	48.84	YES
28-Jun	271.2604	48.84	YES
29-Jun	292.2813	48.84	YES
30-Jun	276.1771	48.84	YES
1-Jul	271.2708	48.84	YES
2-Jul	245.8854	48.84	YES
3-Jul	227.6458	48.84	YES
4-Jul	239.0521	48.84	YES

16-May	215.0104	48.84	YES
17-May	218.2604	48.84	YES
18-May	182.4896	48.84	YES
19-May	142.7708	48.84	YES
20-May	146.3542	48.84	YES
21-May	158.8125	48.84	YES
22-May	158.9792	48.84	YES
23-May	158.875	48.84	YES
24-May	132.2188	48.84	YES
25-May	166.5833	48.84	YES
26-May	227.6875	48.84	YES
27-May	225.3542	48.84	YES
28-May	203.6458	48.84	YES
29-May	251.125	48.84	YES
30-May	250.8021	48.84	YES
31-May	195.8646	48.84	YES
1-Jun	218.8021	48.84	YES
2-Jun	225.8125	48.84	YES
3-Jun	230.1354	48.84	YES
4-Jun	179.4583	48.84	YES
5-Jun	218.3021	48.84	YES
6-Jun	248.5833	48.84	YES
7-Jun	263.1354	48.84	YES
8-Jun	278.2604	48.84	YES
9-Jun	216.8646	48.84	YES
10-Jun	203.8542	48.84	YES
11-Jun	278.4688	48.84	YES
12-Jun	288.7292	48.84	YES
13-Jun	378.1979	48.84	YES
14-Jun	495.1667	48.84	YES
15-Jun	375.4479	48.84	YES
16-Jun	359.4167	48.84	YES
17-Jun	309.5	48.84	YES
18-Jun	270.8646	48.84	YES
19-Jun	311.4271	48.84	YES
20-Jun	255.2396	48.84	YES
21-Jun	313.75	48.84	YES
22-Jun	243.2083	48.84	YES
23-Jun	224.3438	48.84	YES
24-Jun	221.6354	48.84	YES
25-Jun	221.8542	48.84	YES
26-Jun	268.9167	48.84	YES
27-Jun	244.5104	48.84	YES
28-Jun	262.3021	48.84	YES
29-Jun	274.4375	48.84	YES
30-Jun	315.0104	48.84	YES
1-Jul	343.8542	48.84	YES
2-Jul	337.2292	48.84	YES
3-Jul	315.4583	48.84	YES
4-Jul	269.9896	48.84	YES

5-Jul	229.2708	48.84	YES	5-Jul	222.3333	48.84	YES	5-Jul	286.4688	48.84	YES
6-Jul	340.1771	48.84	YES	6-Jul	206.5417	48.84	YES	6-Jul	219.7083	48.84	YES
7-Jul	277.3646	48.84	YES	7-Jul	217.1875	48.84	YES	7-Jul	180.2604	48.84	YES
8-Jul	312.1667	48.84	YES	8-Jul	210.0104	48.84	YES	8-Jul	181.6042	48.84	YES
9-Jul	338.1354	48.84	YES	9-Jul	238.7396	48.84	YES	9-Jul	223.5521	48.84	YES
10-Jul	277.9583	48.84	YES	10-Jul	271.7813	48.84	YES	10-Jul	229.9375	48.84	YES
11-Jul	259.5729	48.84	YES	11-Jul	325.3229	48.84	YES	11-Jul	220.8646	48.84	YES
12-Jul	261.8854	48.84	YES	12-Jul	359.5208	48.84	YES	12-Jul	235.8333	48.84	YES
13-Jul	312.0313	48.84	YES	13-Jul	295.6458	48.84	YES	13-Jul	234.0729	48.84	YES
14-Jul	339.7292	48.84	YES	14-Jul	308.6563	48.84	YES	14-Jul	209.0417	48.84	YES
15-Jul	345.8854	48.84	YES	15-Jul	296.4792	48.84	YES	15-Jul	230.625	48.84	YES
16-Jul	400.7292	48.84	YES	16-Jul	281.1354	48.84	YES	16-Jul	273.7708	48.84	YES
17-Jul	427.1979	48.84	YES	17-Jul	281.1875	48.84	YES	17-Jul	337.9271	48.84	YES
18-Jul	413.8125	48.84	YES	18-Jul	301.375	48.84	YES	18-Jul	391.5521	48.84	YES
19-Jul	331.3438	48.84	YES	19-Jul	285.7292	48.84	YES	19-Jul	400.1771	48.84	YES
20-Jul	318.8438	48.84	YES	20-Jul	290.9895	48.84	YES	20-Jul	380.5938	48.84	YES
21-Jul	260.8542	48.84	YES	21-Jul	286.4167	48.84	YES	21-Jul	386.1458	48.84	YES
22-Jul	282.6354	48.84	YES	22-Jul	266.2316	48.84	YES	22-Jul	352.0833	48.84	YES
23-Jul	274.6563	48.84	YES	23-Jul	234.3125	48.84	YES	23-Jul	343.4375	48.84	YES
24-Jul	287.1771	48.84	YES	24-Jul	236.6022	48.84	YES	24-Jul	347.8854	48.84	YES
25-Jul	242.3542	48.84	YES	25-Jul	259.883	48.84	YES	25-Jul	339.8229	48.84	YES
26-Jul	298.1875	48.84	YES	26-Jul	244.1875	48.84	YES	26-Jul	314.8125	48.84	YES
27-Jul	391.0337	48.84	YES	27-Jul	237.3958	48.84	YES	27-Jul	286.4896	48.84	YES
28-Jul	501.6979	48.84	YES	28-Jul	254.2083	48.84	YES	28-Jul	316.1771	48.84	YES
29-Jul	449.0729	48.84	YES	29-Jul	242.2708	48.84	YES	29-Jul	320.5104	48.84	YES
30-Jul	355.4896	48.84	YES	30-Jul	246.4667	48.84	YES	30-Jul	328.5208	48.84	YES
31-Jul	323.8854	48.84	YES	31-Jul	205.0947	48.84	YES	31-Jul	319.4792	48.84	YES
1-Aug	285.6146	48.84	YES	1-Aug	200.3646	48.84	YES	1-Aug	276.4375	48.84	YES
2-Aug	273.8125	48.84	YES	2-Aug	197.8021	48.84	YES	2-Aug	309.1771	48.84	YES
3-Aug	309.0729	48.84	YES	3-Aug	215.5	48.84	YES	3-Aug	307.9167	48.84	YES
4-Aug	289.0104	48.84	YES	4-Aug	240.8854	48.84	YES	4-Aug	316.2188	48.84	YES
5-Aug	242.9896	48.84	YES	5-Aug	216.1771	48.84	YES	5-Aug	321.8229	48.84	YES
6-Aug	266.375	48.84	YES	6-Aug	225.1354	48.84	YES	6-Aug	304.9375	48.84	YES
7-Aug	229.2292	48.84	YES	7-Aug	239.6146	48.84	YES	7-Aug	307.0625	48.84	YES
8-Aug	202.1667	48.84	YES	8-Aug	232.3125	48.84	YES	8-Aug	266.9688	48.84	YES
9-Aug	192.2604	48.84	YES	9-Aug	195.0313	48.84	YES	9-Aug	267.5208	48.84	YES
10-Aug	189.1875	48.84	YES	10-Aug	183.0104	48.84	YES	10-Aug	261.4479	48.84	YES
11-Aug	163.7396	48.84	YES	11-Aug	209.7604	48.84	YES	11-Aug	238.3854	48.84	YES
12-Aug	183.9583	48.84	YES	12-Aug	165.7684	48.84	YES	12-Aug	228.4167	48.84	YES
13-Aug	162.4896	48.84	YES	13-Aug	139	48.84	YES	13-Aug	232.8229	48.84	YES
14-Aug	161.0313	48.84	YES	14-Aug	130.9896	48.84	YES	14-Aug	239.625	48.84	YES
15-Aug	164.2917	48.84	YES	15-Aug	130.8229	48.84	YES	15-Aug	238.8438	48.84	YES
16-Aug	179.5	48.84	YES	16-Aug	135.8333	48.84	YES	16-Aug	248.5313	48.84	YES
17-Aug	199.8229	48.84	YES	17-Aug	130.0833	48.84	YES	17-Aug	213.9896	48.84	YES
18-Aug	198.9271	48.84	YES	18-Aug	142.6146	48.84	YES	18-Aug	195.2917	48.84	YES
19-Aug	192	48.84	YES	19-Aug	144.2083	48.84	YES	19-Aug	204.1563	48.84	YES
20-Aug	173.2604	48.84	YES	20-Aug	137.0833	48.84	YES	20-Aug	208.5625	48.84	YES
21-Aug	155.4479	48.84	YES	21-Aug	116.2817	48.84	YES	21-Aug	256.375	48.84	YES
22-Aug	158.2917	48.84	YES	22-Aug	115.6835	48.84	YES	22-Aug	218.2708	48.84	YES
23-Aug	131.5521	48.84	YES	23-Aug	103.6621	48.84	YES	23-Aug	211.1146	48.84	YES

24-Aug	124.9688	48.84	YES	24-Aug	94.14688	48.84	YES	24-Aug	212.0729	48.84	YES
25-Aug	92.99167	48.84	YES	25-Aug	92.23125	48.84	YES	25-Aug	243.625	48.84	YES
26-Aug	97.54271	48.84	YES	26-Aug	92.31771	48.84	YES	26-Aug	252.1771	48.84	YES
27-Aug	80.10417	48.84	YES	27-Aug	97.89063	48.84	YES	27-Aug	223.2813	48.84	YES
28-Aug	71.66875	48.84	YES	28-Aug	95.02396	48.84	YES	28-Aug	215.1458	48.84	YES
29-Aug	72.55729	48.84	YES	29-Aug	95.37396	48.84	YES	29-Aug	216.1458	48.84	YES
30-Aug	74.40729	48.84	YES	30-Aug	93.79167	48.84	YES	30-Aug	239.2604	48.84	YES
31-Aug	65.89479	48.84	YES	31-Aug	91.63125	48.84	YES	31-Aug	252.2917	48.84	YES
1-Sep	57.63125	48.84	YES	1-Sep	88.60208	48.84	YES	1-Sep	238.9063	48.84	YES
2-Sep	71.13646	48.84	YES	2-Sep	83.51042	48.84	YES	2-Sep	196.3438	48.84	YES
3-Sep	82.69583	48.84	YES	3-Sep	90.77917	48.84	YES	3-Sep	166.0729	48.84	YES
4-Sep	94.16563	48.84	YES	4-Sep	95.85521	48.84	YES	4-Sep	122.5104	48.84	YES
5-Sep	175.2917	48.84	YES	5-Sep	127.4792	48.84	YES	5-Sep	120.4688	48.84	YES
6-Sep	172.6979	48.84	YES	6-Sep	123.3646	48.84	YES	6-Sep	123	48.84	YES
7-Sep	131.6771	48.84	YES	7-Sep	118.1667	48.84	YES	7-Sep	127.5521	48.84	YES
8-Sep	124.125	48.84	YES	8-Sep	113.5521	48.84	YES	8-Sep	122.8333	48.84	YES
9-Sep	127.1875	48.84	YES	9-Sep	111.6458	48.84	YES	9-Sep	103.6688	48.84	YES
10-Sep	126.25	48.84	YES	10-Sep	110.5729	48.84	YES	10-Sep	93.36042	48.84	YES
11-Sep	123.1875	48.84	YES	11-Sep	112.2813	48.84	YES	11-Sep	90.73438	48.84	YES
12-Sep	117.6979	48.84	YES	12-Sep	119.1146	48.84	YES	12-Sep	88.80729	48.84	YES
13-Sep	106.8438	48.84	YES	13-Sep	127	48.84	YES	13-Sep	99.53854	48.84	YES
14-Sep	108.6146	48.84	YES	14-Sep	121.3021	48.84	YES	14-Sep	108.7521	48.84	YES
15-Sep	125.25	48.84	YES	15-Sep	119.4375	48.84	YES	15-Sep	147.6042	48.84	YES
16-Sep	121.0313	48.84	YES	16-Sep	126.1667	48.84	YES	16-Sep	172.6875	48.84	YES
17-Sep	126.2188	48.84	YES	17-Sep	123.9792	48.84	YES	17-Sep	147.0729	48.84	YES
18-Sep	118.8646	48.84	YES	18-Sep	118.3021	48.84	YES	18-Sep	134.3542	48.84	YES
19-Sep	115.5938	48.84	YES	19-Sep	113.0104	48.84	YES	19-Sep	127.0313	48.84	YES
20-Sep	115.2292	48.84	YES	20-Sep	111.2188	48.84	YES	20-Sep	122.4063	48.84	YES
21-Sep	112.9792	48.84	YES	21-Sep	119.2292	48.84	YES	21-Sep	118.4479	48.84	YES
22-Sep	110.6563	48.84	YES	22-Sep	139.3333	48.84	YES	22-Sep	116.1771	48.84	YES
23-Sep	112.4583	48.84	YES	23-Sep	142.0729	48.84	YES	23-Sep	121.8542	48.84	YES
24-Sep	105.8125	48.84	YES	24-Sep	128.6979	48.84	YES	24-Sep	112.8542	48.84	YES
25-Sep	102.9063	48.84	YES	25-Sep	122.6875	48.84	YES	25-Sep	109.4792	48.84	YES
26-Sep	102.7708	48.84	YES	26-Sep	118.2813	48.84	YES	26-Sep	106.6771	48.84	YES
27-Sep	106.5938	48.84	YES	27-Sep	117.0625	48.84	YES	27-Sep	104.7396	48.84	YES
28-Sep	104.7292	48.84	YES	28-Sep	124.7188	48.84	YES	28-Sep	101.8042	48.84	YES
29-Sep	102.9792	48.84	YES	29-Sep	126.4375	48.84	YES	29-Sep	99.36771	48.84	YES
30-Sep	101.6458	48.84	YES	30-Sep	122.9375	48.84	YES	30-Sep	121.4396	48.84	YES
1-Oct	102.4583	47.55	YES	1-Oct	122.4688	47.55	YES	1-Oct	121.7917	47.55	YES
2-Oct	117.3542	47.55	YES	2-Oct	126.7396	47.55	YES	2-Oct	126.25	47.55	YES
3-Oct	131.7708	47.55	YES	3-Oct	131.6771	47.55	YES	3-Oct	130.9479	47.55	YES
4-Oct	135.1563	47.55	YES	4-Oct	137.5833	47.55	YES	4-Oct	138.8021	47.55	YES
5-Oct	128.2604	47.55	YES	5-Oct	131.8958	47.55	YES	5-Oct	145.5104	47.55	YES
6-Oct	124.6354	47.55	YES	6-Oct	128.8125	47.55	YES	6-Oct	143.1354	47.55	YES
7-Oct	125.1667	47.55	YES	7-Oct	125.7708	47.55	YES	7-Oct	136.4167	47.55	YES
8-Oct	121.4167	47.55	YES	8-Oct	122.9375	47.55	YES	8-Oct	130.7292	47.55	YES
9-Oct	115.5833	47.55	YES	9-Oct	73.85417	47.55	YES	9-Oct	129.7917	47.55	YES
10-Oct	111.8646	47.55	YES	10-Oct	69.3125	47.55	YES	10-Oct	126.7188	47.55	YES
11-Oct	110.4167	47.55	YES	11-Oct	68.75313	47.55	YES	11-Oct	125.3542	47.55	YES
12-Oct	108.3854	47.55	YES	12-Oct	64.67083	47.55	YES	12-Oct	124.3229	47.55	YES

13-Oct	122.0729	47.55	YES
14-Oct	118.2281	47.55	YES
15-Oct	76.53229	47.55	YES
16-Oct	70.90104	40.65	YES
17-Oct	70.25417	40.65	YES
18-Oct	71.80313	40.65	YES
19-Oct	68.21875	40.65	YES
20-Oct	68.02188	40.65	YES
21-Oct	66.0625	40.65	YES
22-Oct	65.65	40.65	YES
23-Oct	64.375	40.65	YES
24-Oct	63.71042	40.65	YES
25-Oct	64.04896	40.65	YES
26-Oct	63.49583	40.65	YES
27-Oct	63.67083	40.65	YES
28-Oct	62.49896	40.65	YES
29-Oct	62.70313	40.65	YES
30-Oct	61.20312	40.65	YES
31-Oct	60.73229	40.65	YES

2015 Total Days Unable to Divert Water= 26

13-Oct	63.91563	47.55	YES
14-Oct	62.275	47.55	YES
15-Oct	59.34479	47.55	YES
16-Oct	60.14479	40.65	YES
17-Oct	59.24792	40.65	YES
18-Oct	58.04271	40.65	YES
19-Oct	57.025	40.65	YES
20-Oct	55.89896	40.65	YES
21-Oct	55.775	40.65	YES
22-Oct	56.38438	40.65	YES
23-Oct	55.74479	40.65	YES
24-Oct	55.48333	40.65	YES
25-Oct	55.26667	40.65	YES
26-Oct	54.15625	40.65	YES
27-Oct	54.24479	40.65	YES
28-Oct	54.10313	40.65	YES
29-Oct	53.13125	40.65	YES
30-Oct	53.40625	40.65	YES
31-Oct	59.34375	40.65	YES

2016 Total Days Unable to Divert Water= 27

13-Oct	123.9375	47.55	YES
14-Oct	125.5104	47.55	YES
15-Oct	118.3688	47.55	YES
16-Oct	85.82083	40.65	YES
17-Oct	81.09896	40.65	YES
18-Oct	78.85625	40.65	YES
19-Oct	79.12187	40.65	YES
20-Oct	79.63438	40.65	YES
21-Oct	78.90417	40.65	YES
22-Oct	77.24271	40.65	YES
23-Oct	75.90521	40.65	YES
24-Oct	73.91042	40.65	YES
25-Oct	72.53854	40.65	YES
26-Oct	71.16771	40.65	YES
27-Oct	70.92292	40.65	YES
28-Oct	70.48958	40.65	YES
29-Oct	70.55938	40.65	YES
30-Oct	69.45833	40.65	YES
31-Oct	69.54375	40.65	YES

2017 Total Days Unable to Divert Water= 37

APPENDIX 2 - F

Water Quality Data

LT2-

DATE	E.COLI	LT2 TESTS	
10.23.17	15.6		
11.6.17	59		
11.20.17	60		
12.4.17	29.2		
12.18.17	61.3		
1.2.18	172.2		
1.16.18	209.8		
1.29.18	920.8		
2.14.18	12.1		
3.14.18	37.9		
3.13.18	123.6		
3.26.18	93		
4.10.18	157.6		
	1952.1	AVG 139.4	

—Not Good
Should be less than 100

Forced to have UV Lights :)

PWS Name: Power-Teton County PWSID: MT0000311

Operator filling out form: Karol Walker

Raw water sample location description: INTake from Muddy Creek into plant.

E. coli sampling must be completed every other week for one year (or operating season) Please **circle** the dates you intend to sample for LT2 compliance and submit to DEQ. Remember, the samples have to be taken within 2 days of the planned date. Questions? Call Lisa Kaufman SWTR Manager at 444-5313 or email lkaufman@mt.gov.

2017

October

Su	Mo	Tu	We	Th	Fr	Sa
1	2	3	4	5	6	7
8	9	10	11	12	13	14
15	16	17	18	19	20	21
22	23	24	25	26	27	28
29	30	31				

November

Su	Mo	Tu	We	Th	Fr	Sa
			1	2	3	4
5	6	7	8	9	10	11
12	13	14	15	16	17	18
19	20	21	22	23	24	25
26	27	28	29	30		

December

Su	Mo	Tu	We	Th	Fr	Sa
					1	2
3	4	5	6	7	8	9
10	11	12	13	14	15	16
17	18	19	20	21	22	23
24	25	26	27	28	29	30
31						

Did not meet time so add on 1 more

2018

January

Su	Mo	Tu	We	Th	Fr	Sa
	1	2	3	4	5	6
7	8	9	10	11	12	13
14	15	16	17	18	19	20
21	22	23	24	25	26	27
28	29	30	31			

February

Su	Mo	Tu	We	Th	Fr	Sa
				1	2	3
4	5	6	7	8	9	10
11	12	13	14	15	16	17
18	19	20	21	22	23	24
25	26	27	28			

March

Su	Mo	Tu	We	Th	Fr	Sa
				1	2	3
4	5	6	7	8	9	10
11	12	13	14	15	16	17
18	19	20	21	22	23	24
25	26	27	28	29	30	31

April

Su	Mo	Tu	We	Th	Fr	Sa
1	2	3	4	5	6	7
8	9	10	11	12	13	14
15	16	17	18	19	20	21
22	23	24	25	26	27	28
29	30					

May

Su	Mo	Tu	We	Th	Fr	Sa
		1	2	3	4	5
6	7	8	9	10	11	12
13	14	15	16	17	18	19
20	21	22	23	24	25	26
27	28	29	30	31		

June

Su	Mo	Tu	We	Th	Fr	Sa
					1	2
3	4	5	6	7	8	9
10	11	12	13	14	15	16
17	18	19	20	21	22	23
24	25	26	27	28	29	30

July

Su	Mo	Tu	We	Th	Fr	Sa
1	2	3	4	5	6	7
8	9	10	11	12	13	14
15	16	17	18	19	20	21
22	23	24	25	26	27	28
29	30	31				

August

Su	Mo	Tu	We	Th	Fr	Sa
			1	2	3	4
5	6	7	8	9	10	11
12	13	14	15	16	17	18
19	20	21	22	23	24	25
26	27	28	29	30	31	

September

Su	Mo	Tu	We	Th	Fr	Sa
						1
2	3	4	5	6	7	8
9	10	11	12	13	14	15
16	17	18	19	20	21	22
23	24	25	26	27	28	29
30						

Should be Done.

October

Su	Mo	Tu	We	Th	Fr	Sa
	1	2	3	4	5	6
7	8	9	10	11	12	13
14	15	16	17	18	19	20
21	22	23	24	25	26	27
28	29	30	31			

November

Su	Mo	Tu	We	Th	Fr	Sa
				1	2	3
4	5	6	7	8	9	10
11	12	13	14	15	16	17
18	19	20	21	22	23	24
25	26	27	28	29	30	

December

Su	Mo	Tu	We	Th	Fr	Sa
						1
2	3	4	5	6	7	8
9	10	11	12	13	14	15
16	17	18	19	20	21	22
23	24	25	26	27	28	29
30	31					

Done Sampling

Tried to miss Christmas week but

Disinfection Byproducts Rule
"Disinfection Byproduct Precurser Reporting Form"
(for systems using conventional filtration)

System Name: POWER-TETON COUNTY WATER & SEWER DISTRICT

PWSID: MT 0000311

			(A)	(B)	(C)		(D)	(E)	
Year	Month	Sample Date	Finished Water TOCFIN (mg/L)	Source Water TOCRAW (mg/L)	Calculated % Removal	Source Water Alkalinity (mg/L)	Required TOC Removal %	TOC Ratio Monthly	Quarterly Average Ratio
2017	January	01/23/17	1.8	1.9	9.4	273	15%	0.63	
2017	February	02/22/17	4.7	7.8	39.7	251	25%	1.59	0.67
2017	March	03/13/17	3.2	3.1	-3.2	278	15%	-0.22	
2017	April	04/17/17	5.4	5.8	6.9	293	25%	0.28	
2017	May	05/23/17	2.9	4.3	32.6	193	25%	1.30	1.01
2017	June	06/19/17	2.5	3.2	21.9	217	15%	1.46	
2017	July	07/10/17	2.6	3.6	27.8	213	15%	1.85	
2017	August	08/07/17	1.7	2.4	29.2	209	15%	1.94	1.23
2017	September	09/20/17	2.4	2.6	7.7	275	15%	0.51	
2017	October	10/11/17	2.3	2.5	8.0	273	15%	0.53	
2017	November	11/06/17	2.2	2.2	0.0	270	15%	0.00	0.50
2017	December	12/04/17	1.8	2.1	14.3	270	15%	0.95	
			2.79				Average of Quarterly Average Ratios:		0.85
Were Removal Requiremnents Met? (Circle One)					Yes	No			**Must be>1.00**
DBP Precursor Sampling Frequency: (Circle One)					Monthly	Quarterly			

Percent TOC Removal Required (Column **D**)

Source Water TOC	Source Water Alkalinity 0-60 mg/L	60-120 mg/L	>120 mg/L
>2 - 4.0 mg/L	35%	25%	15%
>4.0 - 8.0 mg/L	45%	35%	25%
>8 mg/L	50%	40%	30%

Equations:

Column C = (1-(A/B))x 100
Column D = See table
Column E = C / D

System Operator:_____ Date:_____

J.Jose 8/30/2010

Disinfection Byproducts Rule
"Disinfection Byproduct Precurser Reporting Form"
(for systems using conventional filtration)

System Name: POWER-TETON COUNTY WATER & SEWER DISTRICT

PWSID: MT 0000311

			(A)	(B)	(C)		(D)	(E)	
Year	Month	Sample Date	Finished Water TOCFIN (mg/L)	Source Water TOCRAW (mg/L)	Calculated % Removal	Source Water Alkalinity (mg/L)	Required TOC Removal %	TOC Ratio Monthly	Quarterly Average Ratio
2016	January	01/11/16	1.7	2	9.4	291	15%	0.63	
2016	February	02/08/16	1.9	2.4	20.8	275	15%	1.39	0.98
2016	March	03/21/16	1.9	2.2	13.6	259	15%	0.91	
2016	April	04/11/16	2.2	2.8	21.4	291	15%	1.43	
2016	May	05/27/16	2.5	3.7	32.4	214	15%	2.16	1.70
2016	June	06/13/16	3.1	4	22.5	231	15%	1.50	
2016	July	07/25/16	1.7	2.6	34.6	212	15%	2.31	
2016	August	08/08/16	1.9	2.6	26.9	222	15%	1.79	1.73
2016	September	09/19/16	1.8	2.4	25.0	279	15%	1.67	
2016	October	10/24/16	1.9	2.3	17.4	275	15%	1.16	
2016	November	11/21/16	1.8	2.1	14.3	278	15%	0.95	1.17
2016	December	12/05/16	1.5	1.9	21.1	281	15%	1.40	
			1.99				Average of Quarterly Average Ratios:		1.39
Were Removal Requiremnents Met? (Circle One)					Yes	No			**Must be>1.00**
DBP Precursor Sampling Frequency: (Circle One)					Monthly	Quarterly			

Percent TOC Removal Required (Column **D**)

Source Water TOC	Source Water Alkalinity 0-60 mg/L	60-120 mg/L	>120 mg/L
>2 - 4.0 mg/L	35%	25%	15%
>4.0 - 8.0 mg/L	45%	35%	25%
>8 mg/L	50%	40%	30%

Equations:

Column C = (1-(A/B))x 100
Column D = See table
Column E = C / D

System Operator:_____ Date:_____

J.Jose 8/30/2010

Disinfection Byproducts Rule
"Disinfection Byproduct Precurser Reporting Form"
(for systems using conventional filtration)

System Name: POWER-TETON COUNTY WATER & SEWER DISTRICT

PWSID: MT 0000311

			(A)	(B)	(C)		(D)	(E)	
Year	Month	Sample Date	Finished Water TOCFIN (mg/L)	Source Water TOCRAW (mg/L)	Calculated % Removal	Source Water Alkalinity (mg/L)	Required TOC Removal %	TOC Ratio Monthly	Quarterly Average Ratio
2015	January	01/15/15	1.7	2.1	19.0	310	15%	1.27	
2015	February	02/09/15	3.3	3.9	15.4	259	15%	1.03	1.07
2015	March	03/16/15	3.1	3.6	13.9	283	15%	0.93	
2015	April	04/21/15	2.7	3.2	15.6	294	15%	1.04	
2015	May	05/19/15	2.6	3.3	21.2	197	15%	1.41	1.20
2015	June	06/15/15	4.3	6	28.3	219	25%	1.13	
2015	July	07/13/15	2.5	3.7	32.4	216	15%	2.16	
2015	August	08/10/15	2.1	2.6	19.2	211	15%	1.28	1.16
2015	September	09/22/15	2.7	3.2	15.6	280	15%	1.04	
2015	October	10/26/15	2	2.4	16.7	269	15%	1.11	
2015	November	11/23/15	2.1	2.1	0.0	262	15%	0.00	0.57
######	December	12/07/15	2	2.2	9.1	257	15%	0.61	
			2.59				Average of Quarterly Average Ratios:		1.00
Were Removal Requiremnents Met? (Circle One)					Yes	No			**Must be>1.00**
DBP Precursor Sampling Frequency: (Circle One)					Monthly	Quarterly			

Percent TOC Removal Required (Column **D**)

Source Water TOC	Source Water Alkalinity 0-60 mg/L	60-120 mg/L	>120 mg/L
>2 - 4.0 mg/L	35%	25%	15%
>4.0 - 8.0 mg/L	45%	35%	25%
>8 mg/L	50%	40%	30%

Equations:

Column C = (1-(A/B))x 100
Column D = See table
Column E = C / D

System Operator:_____ Date:_____

J.Jose 8/30/2010

Disinfection Byproducts Rule
"Disinfection Byproduct Precurser Reporting Form"
(for systems using conventional filtration)

System Name: POWER-TETON COUNTY WATER & SEWER DISTRICT

PWSID: MT 0000311

			(A)	(B)	(C)		(D)	(E)	
Year	Month	Sample Date	Finished Water TOCFIN (mg/L)	Source Water TOCRAW (mg/L)	Calculated % Removal	Source Water Alkalinity (mg/L)	Required TOC Removal %	TOC Ratio Monthly	Quarterly Average Ratio
2014	January	01/13/14	2	2.4	16.7	275	15%	1.11	
2014	February	02/28/14	2.2	2.4	8.3	311	15%	0.56	1.06
2014	March	03/24/14	2.7	3.5	22.9	301	15%	1.52	
2014	April	04/07/14	3.2	3.4	5.9	292	15%	0.39	
2014	May	05/19/14	3.9	4.3	9.3	288	25%	0.37	0.94
2014	June	06/09/14	2.7	3.9	30.8	176	15%	2.05	
2014	July	07/09/14	3	3.9	23.1	211	15%	1.54	
2014	August	08/11/14	2.2	2.7	18.5	203	15%	1.23	1.05
2014	September	09/09/14	2	2.3	13.0	199	15%	0.87	
2014	October	10/20/14	2.3	2.6	11.5	278	15%	0.77	
2014	November	11/17/14	2.3	2.5	8.0	270	15%	0.53	0.84
2014	December	12/08/14	1.8	2.2	18.2	272	15%	1.21	
Finished TOC Average:			2.53				Average of Quarterly Average Ratios:		0.97
Were Removal Requiremnents Met? (Circle One)					Yes	No			**Must be>1.00**
DBP Precursor Sampling Frequency: (Circle One)					Monthly	Quarterly			

Percent TOC Removal Required (Column **D**)

Source Water TOC	Source Water Alkalinity 0-60 mg/L	60-120 mg/L	>120 mg/L
>2 - 4.0 mg/L	35%	25%	15%
>4.0 - 8.0 mg/L	45%	35%	25%
>8 mg/L	50%	40%	30%

Equations:

Column C = (1-(A/B))x 100
Column D = See table
Column E = C / D

System Operator:_____ Date:_____

J.Jose 8/30/2010

3-21-2013 Radio nuclid

ENERGY LABORATORIES
www.energylab.com
Analytical Excellence Since 1952
Helena, MT 877-472-0711 • Billings, MT 800-735-4489 • Casper, WY 888-235-0515
Gillette, WY 866-686-7175 • Rapid City, SD 888-672-1225 • College Station, TX 888-690-2218

ANALYTICAL SUMMARY REPORT

April 16, 2012

Power-Teton County Water and Sewer Dist
PO Box 176
Power, MT 59468

Workorder No.: B12031776

Project Name: MT0000311

Energy Laboratories Inc Billings MT received the following 1 sample for Power-Teton County Water and Sewer Dist on 3/22/2012 for analysis.

Sample ID	Client Sample ID	Collect Date	Receive Date	Matrix	Test
B12031776-001	EP002	03/21/12 14:30	03/22/12	Drinking Water	Metals by ICP/ICPMS, Drinking Water Gross Alpha Calculated Gross Alpha Radium 226 + Radium 228 Radium 226, Total Radium 228, Total

The analyses presented in this report were performed by Energy Laboratories, Inc., 1120 S 27th St., Billings, MT 59101, unless otherwise noted. Any exceptions or problems with the analyses are noted in the Laboratory Analytical Report, the QA/QC Summary Report, or the Case Narrative.

The results as reported relate only to the item(s) submitted for testing.

If you have any questions regarding these test results, please call.

Report Approved By: William T Brown
President

Digitally signed by Bill Brown
Date: 2012.04.16 16:30:45 -06:00

LABORATORY ANALYTICAL REPORT

Prepared by Billings, MT Branch

Client: Power-Teton County Water and Sewer Dist
Client Sample ID: EP002
PWS #: MT0000311 **Name:** POWER TETON COUNTY WATER DIST
Facility ID: TP002
SamplingPoint/Location: EP502 / EP002
Project ID: MT0000311
Collector's Name: Karol Walker **Contact Phone #:**
Compliance Sample: YES **Sample Type:** RT

Lab ID: B12031776-001
Report Date: 04/16/12
Collection Date: 03/21/12 14:30
Date Received: 03/22/12
Matrix: Drinking Water
Federal ID#: MT00005

FRDS	Analyses	Result	Units	Qual	RL	MCL/ QCL	Method	Analysis Date / By
RADIONUCLIDES - TOTAL								
4006	Uranium	0.011	mg/L		0.001	0.03	E200.8	04/02/12 20:27 / eli-ca
	Uranium, Activity	7.2	pCi/L		0.7	20	E200.8	04/02/12 20:27 / eli-ca
RADIONUCLIDES								
4002	Gross Alpha	9.6	pCi/L			15	E900.0	04/02/12 23:57 / eli-ca
	Gross Alpha precision (±)	2.7	pCi/L				E900.0	04/02/12 23:57 / eli-ca
	Gross Alpha MDC	2.4	pCi/L				E900.0	04/02/12 23:57 / eli-ca
4000	Gross Alpha - Adjusted	2.4	pCi/L				E900.0	04/11/12 15:51 / eli-ca
4020	Radium 226	-0.09	pCi/L	U		5	E903.0	04/02/12 11:37 / eli-ca
	Radium 226 precision (±)	0.07	pCi/L				E903.0	04/02/12 11:37 / eli-ca
	Radium 226 MDC	0.1	pCi/L				E903.0	04/02/12 11:37 / eli-ca
4030	Radium 228	0.2	pCi/L	U		5	RA-05	04/04/12 13:59 / eli-ca
	Radium 228 precision (±)	0.7	pCi/L				RA-05	04/04/12 13:59 / eli-ca
	Radium 228 MDC	0.7	pCi/L				RA-05	04/04/12 13:59 / eli-ca
4010	Radium 226 + Radium 228	0.4	pCi/L	U		5	A7500-RA	04/05/12 10:32 / eli-ca
	Radium 226 + Radium 228 precision (±)	0.7	pCi/L				A7500-RA	04/05/12 10:32 / eli-ca
	Radium 226 + Radium 228 MDC	0.8	pCi/L				A7500-RA	04/05/12 10:32 / eli-ca

See case narrative regarding combined Ra226+Ra228 calculation.

Report Definitions:
RL - Analyte reporting limit.
QCL - Quality control limit.
MDC - Minimum detectable concentration
MCL - Maximum contaminant level.
ND - Not detected at the reporting limit.
U - Not detected at minimum detectable concentration

VOC, NITRATE 2014

ENERGY LABORATORIES
www.energylab.com
Analytical Excellence Since 1952
Helena, MT 877-472-0711 • Billings, MT 800-735-4489 • Casper, WY 888-235-0515
Gillette, WY 866-686-7175 • Rapid City, SD 888-672-1225 • College Station, TX 888-690-2218

ANALYTICAL SUMMARY REPORT

April 11, 2014

Power-Teton County Water and Sewer Dist
PO Box 176
Power, MT 59468

Work Order: B14032091

Project Name: MT0000311

Energy Laboratories Inc Billings MT received the following 2 samples for Power-Teton County Water and Sewer Dist on 3/27/2014 for analysis.

Lab ID	Client Sample ID	Collect Date	Receive Date	Matrix	Test
B14032091-001	EP002	03/26/14 8:30	03/27/14	Drinking Water	Nitrogen, Nitrate + Nitrite 524-Purgeable Organics, SDWA
B14032091-002	Trip Blank Lot022514 B-TS SHP0263	03/26/14 8:30	03/27/14	Trip Blank	524-Purgeable Organics, SDWA

The analyses presented in this report were performed by Energy Laboratories, Inc., 1120 S 27th St., Billings, MT 59101, unless otherwise noted. Any exceptions or problems with the analyses are noted in the Laboratory Analytical Report, the QA/QC Summary Report, or the Case Narrative.

The results as reported relate only to the item(s) submitted for testing.

If you have any questions regarding these test results, please call.

Report Approved By: William T Brown
President

Digitally signed by
Bill Brown
Date: 2014.04.11 13:08:13 -06:00

LABORATORY ANALYTICAL REPORT

Prepared by Billings, MT Branch

Client: Power-Teton County Water and Sewer Dist
Client Sample ID: EP002
PWS #: MT0000311 **Name:** POWER TETON COUNTY WATER DIST
Facility ID: TP002
SamplingPoint/Location: EP502 / EP002
Project ID: MT0000311
Collector's Name: Karol Walker **Contact Phone #:**
Compliance Sample: YES **Sample Type:** RT

Lab ID: B14032091-001
Report Date: 04/11/14
Collection Date: 03/26/14 08:30
Date Received: 03/27/14
Matrix: Drinking Water
Federal ID#: MT00005

FRDS Analyses	Result	Units	Qual	RL	MCL/ QCL	Method	Analysis Date / By
NUTRIENTS							
1038 Nitrogen, Nitrate+Nitrite as N	3.02	mg/L		0.01	10	E353.2	03/28/14 11:37 / djr
VOLATILE ORGANIC COMPOUNDS							
2990 Benzene	ND	ug/L		0.50	5	E524.2	04/07/14 12:09 / sbd
2993 Bromobenzene	ND	ug/L		0.50		E524.2	04/07/14 12:09 / sbd
2430 Bromochloromethane	ND	ug/L		0.50		E524.2	04/07/14 12:09 / sbd
2943 Bromodichloromethane	4.0	ug/L		0.50		E524.2	04/07/14 12:09 / sbd
2942 Bromoform	ND	ug/L		0.50		E524.2	04/07/14 12:09 / sbd
2214 Bromomethane	ND	ug/L		0.50		E524.2	04/07/14 12:09 / sbd
2422 n-Butylbenzene	ND	ug/L		0.50		E524.2	04/07/14 12:09 / sbd
2428 sec-Butylbenzene	ND	ug/L		0.50		E524.2	04/07/14 12:09 / sbd
2426 tert-Butylbenzene	ND	ug/L		0.50		E524.2	04/07/14 12:09 / sbd
2982 Carbon tetrachloride	ND	ug/L		0.50	5	E524.2	04/07/14 12:09 / sbd
2989 Chlorobenzene	ND	ug/L		0.50	100	E524.2	04/07/14 12:09 / sbd
2944 Chlorodibromomethane	1.5	ug/L		0.50		E524.2	04/07/14 12:09 / sbd
2216 Chloroethane	ND	ug/L		0.50		E524.2	04/07/14 12:09 / sbd
2941 Chloroform	4.7	ug/L		0.50		E524.2	04/07/14 12:09 / sbd
2210 Chloromethane	ND	ug/L		0.50		E524.2	04/07/14 12:09 / sbd
2965 2-Chlorotoluene	ND	ug/L		0.50		E524.2	04/07/14 12:09 / sbd
2966 4-Chlorotoluene	ND	ug/L		0.50		E524.2	04/07/14 12:09 / sbd
2931 1,2-Dibromo-3-chloropropane	ND	ug/L		1.0	0.2	E524.2	04/07/14 12:09 / sbd
2408 Dibromomethane	ND	ug/L		0.50		E524.2	04/07/14 12:09 / sbd
2968 1,2-Dichlorobenzene	ND	ug/L		0.50	600	E524.2	04/07/14 12:09 / sbd
2967 1,3-Dichlorobenzene	ND	ug/L		0.50		E524.2	04/07/14 12:09 / sbd
2969 1,4-Dichlorobenzene	ND	ug/L		0.50	75	E524.2	04/07/14 12:09 / sbd
2212 Dichlorodifluoromethane	ND	ug/L		0.50		E524.2	04/07/14 12:09 / sbd
2978 1,1-Dichloroethane	ND	ug/L		0.50		E524.2	04/07/14 12:09 / sbd
2980 1,2-Dichloroethane	ND	ug/L		0.50	5	E524.2	04/07/14 12:09 / sbd
2946 1,2-Dibromoethane	ND	ug/L		0.50	0.05	E524.2	04/07/14 12:09 / sbd
2977 1,1-Dichloroethene	ND	ug/L		0.50	7	E524.2	04/07/14 12:09 / sbd
2380 cis-1,2-Dichloroethene	ND	ug/L		0.50	70	E524.2	04/07/14 12:09 / sbd
2979 trans-1,2-Dichloroethene	ND	ug/L		0.50	100	E524.2	04/07/14 12:09 / sbd
2983 1,2-Dichloropropane	ND	ug/L		0.50	5	E524.2	04/07/14 12:09 / sbd
2412 1,3-Dichloropropane	ND	ug/L		0.50		E524.2	04/07/14 12:09 / sbd
2416 2,2-Dichloropropane	ND	ug/L		0.50		E524.2	04/07/14 12:09 / sbd
2410 1,1-Dichloropropene	ND	ug/L		0.50		E524.2	04/07/14 12:09 / sbd

Report Definitions: RL - Analyte reporting limit. QCL - Quality control limit. MCL - Maximum contaminant level. ND - Not detected at the reporting limit.

LABORATORY ANALYTICAL REPORT

Prepared by Billings, MT Branch

Client: Power-Teton County Water and Sewer Dist
Client Sample ID: EP002
PWS #: MT0000311 **Name:** POWER TETON COUNTY WATER DIST
Facility ID: TP002
SamplingPoint/Location: EP502 / EP002
Project ID: MT0000311
Collector's Name: Karol Walker **Contact Phone #:**
Compliance Sample: YES **Sample Type:** RT

Lab ID: B14032091-001
Report Date: 04/11/14
Collection Date: 03/26/14 08:30
Date Received: 03/27/14
Matrix: Drinking Water
Federal ID#: MT00005

FRDS	Analyses	Result	Units	Qual	RL	MCL/ QCL	Method	Analysis Date / By
VOLATILE ORGANIC COMPOUNDS								
2413	cis-1,3-Dichloropropene	ND	ug/L		0.50		E524.2	04/07/14 12:09 / sbd
2224	trans-1,3-Dichloropropene	ND	ug/L		0.50		E524.2	04/07/14 12:09 / sbd
2992	Ethylbenzene	ND	ug/L		0.50	700	E524.2	04/07/14 12:09 / sbd
2246	Hexachlorobutadiene	ND	ug/L		0.50		E524.2	04/07/14 12:09 / sbd
2994	Isopropylbenzene	ND	ug/L		0.50		E524.2	04/07/14 12:09 / sbd
2030	p-Isopropyltoluene	ND	ug/L		0.50		E524.2	04/07/14 12:09 / sbd
2251	Methyl tert-butyl ether (MTBE)	ND	ug/L		0.50		E524.2	04/07/14 12:09 / sbd
2964	Methylene chloride	ND	ug/L		0.50	5	E524.2	04/07/14 12:09 / sbd
2248	Naphthalene	ND	ug/L		0.50		E524.2	04/07/14 12:09 / sbd
2998	n-Propylbenzene	ND	ug/L		0.50		E524.2	04/07/14 12:09 / sbd
2996	Styrene	ND	ug/L		0.50	100	E524.2	04/07/14 12:09 / sbd
2986	1,1,1,2-Tetrachloroethane	ND	ug/L		0.50		E524.2	04/07/14 12:09 / sbd
2988	1,1,2,2-Tetrachloroethane	ND	ug/L		0.50		E524.2	04/07/14 12:09 / sbd
2987	Tetrachloroethene	ND	ug/L		0.50	5	E524.2	04/07/14 12:09 / sbd
2991	Toluene	ND	ug/L		0.50	1000	E524.2	04/07/14 12:09 / sbd
2420	1,2,3-Trichlorobenzene	ND	ug/L		0.50		E524.2	04/07/14 12:09 / sbd
2378	1,2,4-Trichlorobenzene	ND	ug/L		0.50	70	E524.2	04/07/14 12:09 / sbd
2981	1,1,1-Trichloroethane	ND	ug/L		0.50	200	E524.2	04/07/14 12:09 / sbd
2985	1,1,2-Trichloroethane	ND	ug/L		0.50	5	E524.2	04/07/14 12:09 / sbd
2984	Trichloroethene	ND	ug/L		0.50	5	E524.2	04/07/14 12:09 / sbd
2218	Trichlorofluoromethane	ND	ug/L		0.50		E524.2	04/07/14 12:09 / sbd
2414	1,2,3-Trichloropropane	ND	ug/L		0.50		E524.2	04/07/14 12:09 / sbd
2950	Trihalomethanes, Total	10	ug/L		0.50	80	E524.2	04/07/14 12:09 / sbd
2418	1,2,4-Trimethylbenzene	ND	ug/L		0.50		E524.2	04/07/14 12:09 / sbd
2424	1,3,5-Trimethylbenzene	ND	ug/L		0.50		E524.2	04/07/14 12:09 / sbd
2976	Vinyl chloride	ND	ug/L		0.50	2	E524.2	04/07/14 12:09 / sbd
2963	m+p-Xylenes	0.25	ug/L	J	0.50		E524.2	04/07/14 12:09 / sbd
2997	o-Xylene	0.10	ug/L	J	0.50		E524.2	04/07/14 12:09 / sbd
2955	Xylenes, Total	0.35	ug/L	J	0.50	10000	E524.2	04/07/14 12:09 / sbd
	Surr: p-Bromofluorobenzene	105	%REC			80-120	E524.2	04/07/14 12:09 / sbd
	Surr: 1,2-Dichloroethane-d4	93.0	%REC			74-127	E524.2	04/07/14 12:09 / sbd
	Surr: Toluene-d8	101	%REC			80-120	E524.2	04/07/14 12:09 / sbd

Report Definitions:
RL - Analyte reporting limit.
QCL - Quality control limit.
J - Estimated value. The analyte was present but less than the reporting limit.
MCL - Maximum contaminant level.
ND - Not detected at the reporting limit.

LABORATORY ANALYTICAL REPORT

Prepared by Billings, MT Branch

Client: Power-Teton County Water and Sewer Dist
Client Sample ID: Trip Blank Lot022514 B-TS SHP0263
PWS #: MT0000311 **Name:** POWER TETON COUNTY WATER DIST
Facility ID:
SamplingPoint/Location: Trip Blank Lot022514
Project ID: MT0000311
Collector's Name: Not Provided **Contact Phone #:**
Compliance Sample: YES **Sample Type:** RT

Lab ID: B14032091-002
Report Date: 04/11/14
Collection Date: 03/26/14 08:30
Date Received: 03/27/14
Matrix: Trip Blank
Federal ID#: MT00005

FRDS	Analyses	Result	Units	Qual	RL	MCL/ QCL	Method	Analysis Date / By
VOLATILE ORGANIC COMPOUNDS								
2990	Benzene	ND	ug/L		0.50	5	E524.2	04/07/14 12:45 / sbd
2993	Bromobenzene	ND	ug/L		0.50		E524.2	04/07/14 12:45 / sbd
2430	Bromochloromethane	ND	ug/L		0.50		E524.2	04/07/14 12:45 / sbd
2943	Bromodichloromethane	ND	ug/L		0.50		E524.2	04/07/14 12:45 / sbd
2942	Bromoform	ND	ug/L		0.50		E524.2	04/07/14 12:45 / sbd
2214	Bromomethane	ND	ug/L		0.50		E524.2	04/07/14 12:45 / sbd
2422	n-Butylbenzene	ND	ug/L		0.50		E524.2	04/07/14 12:45 / sbd
2428	sec-Butylbenzene	ND	ug/L		0.50		E524.2	04/07/14 12:45 / sbd
2426	tert-Butylbenzene	ND	ug/L		0.50		E524.2	04/07/14 12:45 / sbd
2982	Carbon tetrachloride	ND	ug/L		0.50	5	E524.2	04/07/14 12:45 / sbd
2989	Chlorobenzene	ND	ug/L		0.50	100	E524.2	04/07/14 12:45 / sbd
2944	Chlorodibromomethane	ND	ug/L		0.50		E524.2	04/07/14 12:45 / sbd
2216	Chloroethane	ND	ug/L		0.50		E524.2	04/07/14 12:45 / sbd
2941	Chloroform	ND	ug/L		0.50		E524.2	04/07/14 12:45 / sbd
2210	Chloromethane	ND	ug/L		0.50		E524.2	04/07/14 12:45 / sbd
2965	2-Chlorotoluene	ND	ug/L		0.50		E524.2	04/07/14 12:45 / sbd
2966	4-Chlorotoluene	ND	ug/L		0.50		E524.2	04/07/14 12:45 / sbd
2931	1,2-Dibromo-3-chloropropane	ND	ug/L		1.0	0.2	E524.2	04/07/14 12:45 / sbd
2408	Dibromomethane	ND	ug/L		0.50		E524.2	04/07/14 12:45 / sbd
2968	1,2-Dichlorobenzene	ND	ug/L		0.50	600	E524.2	04/07/14 12:45 / sbd
2967	1,3-Dichlorobenzene	ND	ug/L		0.50		E524.2	04/07/14 12:45 / sbd
2969	1,4-Dichlorobenzene	ND	ug/L		0.50	75	E524.2	04/07/14 12:45 / sbd
2212	Dichlorodifluoromethane	ND	ug/L		0.50		E524.2	04/07/14 12:45 / sbd
2978	1,1-Dichloroethane	ND	ug/L		0.50		E524.2	04/07/14 12:45 / sbd
2980	1,2-Dichloroethane	ND	ug/L		0.50	5	E524.2	04/07/14 12:45 / sbd
2946	1,2-Dibromoethane	ND	ug/L		0.50	0.05	E524.2	04/07/14 12:45 / sbd
2977	1,1-Dichloroethene	ND	ug/L		0.50	7	E524.2	04/07/14 12:45 / sbd
2380	cis-1,2-Dichloroethene	ND	ug/L		0.50	70	E524.2	04/07/14 12:45 / sbd
2979	trans-1,2-Dichloroethene	ND	ug/L		0.50	100	E524.2	04/07/14 12:45 / sbd
2983	1,2-Dichloropropane	ND	ug/L		0.50	5	E524.2	04/07/14 12:45 / sbd
2412	1,3-Dichloropropane	ND	ug/L		0.50		E524.2	04/07/14 12:45 / sbd
2416	2,2-Dichloropropane	ND	ug/L		0.50		E524.2	04/07/14 12:45 / sbd
2410	1,1-Dichloropropene	ND	ug/L		0.50		E524.2	04/07/14 12:45 / sbd
2413	cis-1,3-Dichloropropene	ND	ug/L		0.50		E524.2	04/07/14 12:45 / sbd
2224	trans-1,3-Dichloropropene	ND	ug/L		0.50		E524.2	04/07/14 12:45 / sbd
2992	Ethylbenzene	ND	ug/L		0.50	700	E524.2	04/07/14 12:45 / sbd

Report Definitions:
RL - Analyte reporting limit.
QCL - Quality control limit.
MCL - Maximum contaminant level.
ND - Not detected at the reporting limit.

LABORATORY ANALYTICAL REPORT

Prepared by Billings, MT Branch

Client: Power-Teton County Water and Sewer Dist
Lab ID: B14032091-002
Client Sample ID: Trip Blank Lot022514 B-TS SHP0263
Report Date: 04/11/14
PWS #: MT0000311 **Name:** POWER TETON COUNTY WATER DIST
Collection Date: 03/26/14 08:30
Facility ID:
Date Received: 03/27/14
SamplingPoint/Location: Trip Blank Lot022514
Matrix: Trip Blank
Project ID: MT0000311
Federal ID#: MT00005
Collector's Name: Not Provided **Contact Phone #:**
Compliance Sample: YES **Sample Type:** RT

FRDS	Analyses	Result	Units	Qual	RL	MCL/ QCL	Method	Analysis Date / By
VOLATILE ORGANIC COMPOUNDS								
2246	Hexachlorobutadiene	ND	ug/L		0.50		E524.2	04/07/14 12:45 / sbd
2994	Isopropylbenzene	ND	ug/L		0.50		E524.2	04/07/14 12:45 / sbd
2030	p-Isopropyltoluene	ND	ug/L		0.50		E524.2	04/07/14 12:45 / sbd
2251	Methyl tert-butyl ether (MTBE)	ND	ug/L		0.50		E524.2	04/07/14 12:45 / sbd
2964	Methylene chloride	ND	ug/L		0.50	5	E524.2	04/07/14 12:45 / sbd
2248	Naphthalene	ND	ug/L		0.50		E524.2	04/07/14 12:45 / sbd
2998	n-Propylbenzene	ND	ug/L		0.50		E524.2	04/07/14 12:45 / sbd
2996	Styrene	ND	ug/L		0.50	100	E524.2	04/07/14 12:45 / sbd
2986	1,1,1,2-Tetrachloroethane	ND	ug/L		0.50		E524.2	04/07/14 12:45 / sbd
2988	1,1,2,2-Tetrachloroethane	ND	ug/L		0.50		E524.2	04/07/14 12:45 / sbd
2987	Tetrachloroethene	ND	ug/L		0.50	5	E524.2	04/07/14 12:45 / sbd
2991	Toluene	ND	ug/L		0.50	1000	E524.2	04/07/14 12:45 / sbd
2420	1,2,3-Trichlorobenzene	ND	ug/L		0.50		E524.2	04/07/14 12:45 / sbd
2378	1,2,4-Trichlorobenzene	ND	ug/L		0.50	70	E524.2	04/07/14 12:45 / sbd
2981	1,1,1-Trichloroethane	ND	ug/L		0.50	200	E524.2	04/07/14 12:45 / sbd
2985	1,1,2-Trichloroethane	ND	ug/L		0.50	5	E524.2	04/07/14 12:45 / sbd
2984	Trichloroethene	ND	ug/L		0.50	5	E524.2	04/07/14 12:45 / sbd
2218	Trichlorofluoromethane	ND	ug/L		0.50		E524.2	04/07/14 12:45 / sbd
2414	1,2,3-Trichloropropane	ND	ug/L		0.50		E524.2	04/07/14 12:45 / sbd
2950	Trihalomethanes, Total	ND	ug/L		0.50	80	E524.2	04/07/14 12:45 / sbd
2418	1,2,4-Trimethylbenzene	ND	ug/L		0.50		E524.2	04/07/14 12:45 / sbd
2424	1,3,5-Trimethylbenzene	ND	ug/L		0.50		E524.2	04/07/14 12:45 / sbd
2976	Vinyl chloride	ND	ug/L		0.50	2	E524.2	04/07/14 12:45 / sbd
2963	m+p-Xylenes	ND	ug/L		0.50		E524.2	04/07/14 12:45 / sbd
2997	o-Xylene	ND	ug/L		0.50		E524.2	04/07/14 12:45 / sbd
2955	Xylenes, Total	ND	ug/L		0.50	10000	E524.2	04/07/14 12:45 / sbd
	Surr: p-Bromofluorobenzene	106	%REC			80-120	E524.2	04/07/14 12:45 / sbd
	Surr: 1,2-Dichloroethane-d4	94.0	%REC			74-127	E524.2	04/07/14 12:45 / sbd
	Surr: Toluene-d8	100	%REC			80-120	E524.2	04/07/14 12:45 / sbd

Report Definitions:
RL - Analyte reporting limit.
QCL - Quality control limit.
MCL - Maximum contaminant level.
ND - Not detected at the reporting limit.

TTHM lead + Copper THM +

ENERGY LABORATORIES
www.energylab.com
Analytical Excellence Since 1952
Helena, MT 877-472-0711 • Billings, MT 800-735-4489 • Casper, WY 888-235-0515
Gillette, WY 866-686-7175 • Rapid City, SD 888-672-1225 • College Station, TX 888-690-2218

ANALYTICAL SUMMARY REPORT

August 26, 2014

Power-Teton County Water and Sewer Dist
PO Box 176
Power, MT 59468

Work Order: B14080952

Project Name: MT0000311

Energy Laboratories Inc Billings MT received the following 7 samples for Power-Teton County Water and Sewer Dist on 8/12/2014 for analysis.

Lab ID	Client Sample ID	Collect Date	Receive Date	Matrix	Test
B14080952-001	DBP1 505 Teton	08/11/14 8:30	08/12/14	Drinking Water	Haloacetic Acid Liquid-Liquid Ext. (VOA) 552-Haloacetic Acids-(HAAs) 524-Trihalomethanes-(THMs)
B14080952-002	Walker	08/11/14 6:15	08/12/14	Drinking Water	Metals by ICP/ICPMS, Drinking Water Drinking Water Metals Digestion by EPA 200.2
B14080952-003	Smoot B	08/11/14 6:38	08/12/14	Drinking Water	Same As Above
B14080952-004	Jensen	08/11/14 6:45	08/12/14	Drinking Water	Same As Above
B14080952-005	Tackes	08/11/14 7:20	08/12/14	Drinking Water	Same As Above
B14080952-006	MGrassman	08/11/14 8:00	08/12/14	Drinking Water	Same As Above
B14080952-007	Trip Blank Lot#072414 B-TS SHP0263	08/11/14 8:30	08/12/14	Trip Blank	524-Trihalomethanes-(THMs)

The analyses presented in this report were performed by Energy Laboratories, Inc., 1120 S 27th St., Billings, MT 59101, unless otherwise noted. Any exceptions or problems with the analyses are noted in the Laboratory Analytical Report, the QA/QC Summary Report, or the Case Narrative.

The results as reported relate only to the item(s) submitted for testing.

If you have any questions regarding these test results, please call.

Report Approved By: William T Brown
President

Digitally signed by
Bill Brown
Date: 2014.08.26 14:07:12 -06:00

ENERGY LABORATORIES
www.energylab.com
Analytical Excellence Since 1952
Helena, MT 877-472-0711 • Billings, MT 800-735-4489 • Casper, WY 888-235-0515
Gillette, WY 866-686-7175 • Rapid City, SD 888-672-1225 • College Station, TX 888-690-2218

LABORATORY ANALYTICAL REPORT

Prepared by Billings, MT Branch

Client: Power-Teton County Water and Sewer Dist
Client Sample ID: DBP1 505 Teton
PWS #: MT0000311 **Name:** POWER TETON COUNTY WATER DIST
Facility ID: DS001
SamplingPoint/Location: DBP1 / DBP1 505 Teton
Project ID: MT0000311
Collector's Name: Karol Walker Contact Phone #:
Compliance Sample: YES Sample Type: RT

Lab ID: B14080952-001
Report Date: 08/26/14
Collection Date: 08/11/14 08:30
Date Received: 08/12/14
Matrix: Drinking Water
Federal ID#: MT00005

FRDS	Analyses	Result	Units	Qual	RL	MCL/ QCL	Method	Analysis Date / By
	TRIHALOMETHANES							
2943	Bromodichloromethane	6.3	ug/L		0.50		E524.2	08/13/14 00:37 / jmh
2942	Bromoform	ND	ug/L		0.50		E524.2	08/13/14 00:37 / jmh
2944	Chlorodibromomethane	0.77	ug/L		0.50		E524.2	08/13/14 00:37 / jmh
2941	Chloroform	32	ug/L		0.50		E524.2	08/13/14 00:37 / jmh
2950	Trihalomethanes, Total	39	ug/L		0.50	80	E524.2	08/13/14 00:37 / jmh
	Surr: 1,2-Dichloroethane-d4	114	%REC			74-127	E524.2	08/13/14 00:37 / jmh
	Surr: p-Bromofluorobenzene	102	%REC			80-120	E524.2	08/13/14 00:37 / jmh
	Surr: Toluene-d8	102	%REC			80-120	E524.2	08/13/14 00:37 / jmh
	HALOACETIC ACIDS							
2454	Dibromoacetic acid	ND	ug/L		0.25		E552.2	08/14/14 19:17 / msk
2451	Dichloroacetic acid	16	ug/L		0.75		E552.2	08/14/14 19:17 / msk
2453	Monobromoacetic acid	ND	ug/L		0.50		E552.2	08/14/14 19:17 / msk
2450	Monochloroacetic acid	ND	ug/L	D	1.5		E552.2	08/14/14 19:17 / msk
2452	Trichloroacetic acid	10	ug/L		0.50		E552.2	08/14/14 19:17 / msk
2456	Total Regulated Haloacetic Acids	27	ug/L		0.50	60	E552.2	08/14/14 19:17 / msk
2455	Bromochloroacetic acid	2.6	ug/L		0.50		E552.2	08/14/14 19:17 / msk
	Surr: 2,3-Dibromopropionic acid	91.0	%REC			70-130	E552.2	08/14/14 19:17 / msk

Report Definitions:
RL - Analyte reporting limit.
QCL - Quality control limit.
D - RL increased due to sample matrix.
MCL - Maximum contaminant level.
ND - Not detected at the reporting limit.

LABORATORY ANALYTICAL REPORT

Prepared by Billings, MT Branch

Client: Power-Teton County Water and Sewer Dist
Client Sample ID: Jensen
PWS #: MT0000311 **Name:** POWER TETON COUNTY WATER DIST
Facility ID: DS001
SamplingPoint/Location: SP001 / Jensen
Project ID: MT0000311
Collector's Name: Karol Walker **Contact Phone #:**
Compliance Sample: YES **Sample Type:** RT

Lab ID: B14080952-004
Report Date: 08/26/14
Collection Date: 08/11/14 06:45
Date Received: 08/12/14
Matrix: Drinking Water
Federal ID#: MT00005

FRDS Analyses	Result	Units	Qual	RL	MCL/ QCL	Method	Analysis Date / By
METALS, TOTAL							
1022 Copper	0.11	mg/L		0.01	1.3	E200.8	08/15/14 18:42 / amm
1030 Lead	0.002	mg/L		0.001	0.015	E200.8	08/15/14 18:42 / amm

ENERGY LABORATORIES
www.energylab.com
Analytical Excellence Since 1952
Helena, MT 877-472-0711 • Billings, MT 800-735-4489 • Casper, WY 888-235-0515
Gillette, WY 866-686-7175 • Rapid City, SD 888-672-1225 • College Station, TX 888-690-2218

LABORATORY ANALYTICAL REPORT

Prepared by Billings, MT Branch

Client: Power-Teton County Water and Sewer Dist
Client Sample ID: Smoot B
PWS #: MT0000311 **Name:** POWER TETON COUNTY WATER DIST
Facility ID: DS001
SamplingPoint/Location: SP001 / Smoot B
Project ID: MT0000311
Collector's Name: Karol Walker **Contact Phone #:**
Compliance Sample: YES **Sample Type:** RT

Lab ID: B14080952-003
Report Date: 08/26/14
Collection Date: 08/11/14 06:38
Date Received: 08/12/14
Matrix: Drinking Water
Federal ID#: MT00005

FRDS Analyses	Result	Units	Qual	RL	MCL/ QCL	Method	Analysis Date / By
METALS, TOTAL							
1022 Copper	0.03	mg/L		0.01	1.3	E200.8	08/15/14 18:40 / amm
1030 Lead	ND	mg/L		0.001	0.015	E200.8	08/15/14 18:40 / amm

ENERGY LABORATORIES
www.energylab.com
Analytical Excellence Since 1952
Helena, MT 877-472-0711 • Billings, MT 800-735-4489 • Casper, WY 888-235-0515
Gillette, WY 866-686-7175 • Rapid City, SD 888-672-1225 • College Station, TX 888-690-2218

LABORATORY ANALYTICAL REPORT

Prepared by Billings, MT Branch

Client: Power-Teton County Water and Sewer Dist
Client Sample ID: Walker
PWS #: MT0000311 **Name:** POWER TETON COUNTY WATER DIST
Facility ID: DS001
SamplingPoint/Location: SP001 / Walker
Project ID: MT0000311
Collector's Name: Karol Walker **Contact Phone #:**
Compliance Sample: YES **Sample Type:** RT

Lab ID: B14080952-002
Report Date: 08/26/14
Collection Date: 08/11/14 06:15
Date Received: 08/12/14
Matrix: Drinking Water
Federal ID#: MT00005

FRDS Analyses	Result	Units	Qual	RL	MCL QCL	Method	Analysis Date By
METALS, TOTAL							
1022 Copper	[illegible]	mg/L		[illegible]	[illegible]	E200.8	[illegible]
1030 Lead	ND						

ENERGY LABORATORIES
www.energylab.com
Analytical Excellence Since 1952
Helena, MT 877-472-0711 • Billings, MT 800-735-4489 • Casper, WY 888-235-0515
Gillette, WY 866-686-7175 • Rapid City, SD 888-672-1225 • College Station, TX 888-690-2218

LABORATORY ANALYTICAL REPORT
Prepared by Billings, MT Branch

Client: Power-Teton County Water and Sewer Dist
Client Sample ID: MGrassman
PWS #: MT0000311 Name: POWER TETON COUNTY WATER DIST
Facility ID: DS001
SamplingPoint/Location: SP001 MGrassman
Project ID: MT0000311
Collector's Name: Karol Walker
Compliance Sample: YES

Lab ID: B14080952-006
Report Date: 08/25/14
Collection Date: 08/11/14 08:00
Date Received: 08/12/14
Matrix: Drinking Water
Federal ID#: MT00005

Contact Phone #:
Sample Type: RT

FRDS Analyses	Result	Units	Qual	RL	MCL/ QCL	Method	Analysis Date / By
METALS, TOTAL							
1022 Copper	0.03	mg/L		0.01	1.3	E200.8	08/15/14 18:48 / amm
1030 Lead	ND	mg/L		0.001	0.015	E200.8	08/15/14 18:48 / amm

ENERGY LABORATORIES
www.energylab.com
Analytical Excellence Since 1952
Helena, MT 877-472-0711 • Billings, MT 800-735-4489 • Casper, WY 888-235-0515
Gillette, WY 866-686-7175 • Rapid City, SD 888-672-1225 • College Station, TX 888-690-2218

LABORATORY ANALYTICAL REPORT
Prepared by Billings, MT Branch

Client: Power-Teton County Water and Sewer Dist
Client Sample ID: Tackes
PWS #: MT0000311 **Name:** POWER TETON COUNTY WATER DIST
Facility ID: DS001
SamplingPoint/Location: SP001 Tackes
Project ID: MT0000311
Collector's Name: Karol Walker
Compliance Sample: YES

Lab ID: B14080952-005
Report Date: 08/26/14
Collection Date: 08/11/14 07:20
Date Received: 08/12/14
Matrix: Drinking Water
Federal ID#: MT00005

Contact Phone #:
Sample Type: RT

FRDS Analyses	Result	Units	Qual	RL	MCL/ QCL	Method	Analysis Date / By
METALS, TOTAL							
1022 Copper	0.03	mg/L		0.01	1.3	E200.8	08/15/14 18:45 / amm
1030 Lead	ND	mg/L		0.001	0.015	E200.8	08/15/14 18:45 / amm

SOC, VOC, Nitrate 2015

ENERGY LABORATORIES
www.energylab.com
Analytical Excellence Since 1952
Helena, MT 877-472-0711 • Billings, MT 800-735-4489 • Casper, WY 888-235-0515
Gillette, WY 866-686-7175 • Rapid City, SD 888-672-1225 • College Station, TX 888-690-2218

ANALYTICAL SUMMARY REPORT

March 06, 2015

Power-Teton County Water and Sewer Dist
PO Box 176
Power, MT 59468

Work Order: B15021907

Project Name: MT0000311

Energy Laboratories Inc Billings MT received the following 2 samples for Power-Teton County Water and Sewer Dist on 2/26/2015 for analysis.

Lab ID	Client Sample ID	Collect Date	Receive Date	Matrix	Test
B15021907-001	EP002	02/24/15 10:00	02/26/15	Drinking Water	515.4-Herbicides, Chlorinated SDWA Nitrogen, Nitrate + Nitrite Herbicide Liquid-Liquid Microextraction 531-Pesticides, Carbamates SDWA Semi-Volatile Organic Compounds Extraction 525-Semi-Volatile Organic Compounds, MT List 524-Purgeable Organics, SDWA
B15021907-002	Trip Blank Lot#020515 B-PG SHP0264	02/24/15 10:00	02/26/15	Trip Blank	524-Purgeable Organics, SDWA

The analyses presented in this report were performed by Energy Laboratories, Inc., 1120 S 27th St., Billings, MT 59101, unless otherwise noted. Any exceptions or problems with the analyses are noted in the Laboratory Analytical Report, the QA/QC Summary Report, or the Case Narrative.

The results as reported relate only to the item(s) submitted for testing.

If you have any questions regarding these test results, please call.

Report Approved By: William T Brown
President

Digitally signed by
Bill Brown
Date: 2015.03.06 13:58:05 -07:00

LABORATORY ANALYTICAL REPORT

Prepared by Billings, MT Branch

Client: Power-Teton County Water and Sewer Dist
Client Sample ID: EP002
PWS #: MT0000311 **Name:** POWER TETON COUNTY WATER DIST
Facility ID: TP002
SamplingPoint/Location: EP502 / EP002
Project ID: MT0000311
Collector's Name: Karol Walker **Contact Phone #:**
Compliance Sample: YES **Sample Type:** RT

Lab ID: B15021907-001
Report Date: 03/06/15
Collection Date: 02/24/15 10:00
Date Received: 02/26/15
Matrix: Drinking Water
Federal ID#: MT00005

FRDS	Analyses	Result	Units	Qual	RL	MCL/ QCL	Method	Analysis Date / By
NUTRIENTS								
1038	Nitrogen, Nitrate+Nitrite as N	3.94	mg/L		0.01	10	E353.2	02/26/15 12:35 / bas
VOLATILE ORGANIC COMPOUNDS								
2990	Benzene	ND	ug/L		0.50	5	E524.2	02/26/15 15:50 / nl
2993	Bromobenzene	ND	ug/L		0.50		E524.2	02/26/15 15:50 / nl
2430	Bromochloromethane	ND	ug/L		0.50		E524.2	02/26/15 15:50 / nl
2943	Bromodichloromethane	11	ug/L		0.50		E524.2	02/26/15 15:50 / nl
2942	Bromoform	0.28	ug/L	J	0.50		E524.2	02/26/15 15:50 / nl
2214	Bromomethane	ND	ug/L		0.50		E524.2	02/26/15 15:50 / nl
2422	n-Butylbenzene	ND	ug/L		0.50		E524.2	02/26/15 15:50 / nl
2428	sec-Butylbenzene	ND	ug/L		0.50		E524.2	02/26/15 15:50 / nl
2426	tert-Butylbenzene	ND	ug/L		0.50		E524.2	02/26/15 15:50 / nl
2982	Carbon tetrachloride	ND	ug/L		0.50	5	E524.2	02/26/15 15:50 / nl
2989	Chlorobenzene	ND	ug/L		0.50	100	E524.2	02/26/15 15:50 / nl
2944	Chlorodibromomethane	5.0	ug/L		0.50		E524.2	02/26/15 15:50 / nl
2216	Chloroethane	ND	ug/L		0.50		E524.2	02/26/15 15:50 / nl
2941	Chloroform	10	ug/L		0.50		E524.2	02/26/15 15:50 / nl
2210	Chloromethane	ND	ug/L		0.50		E524.2	02/26/15 15:50 / nl
2965	2-Chlorotoluene	ND	ug/L		0.50		E524.2	02/26/15 15:50 / nl
2966	4-Chlorotoluene	ND	ug/L		0.50		E524.2	02/26/15 15:50 / nl
2931	1,2-Dibromo-3-chloropropane	ND	ug/L		1.0	0.2	E524.2	02/26/15 15:50 / nl
2408	Dibromomethane	ND	ug/L		0.50		E524.2	02/26/15 15:50 / nl
2968	1,2-Dichlorobenzene	ND	ug/L		0.50	600	E524.2	02/26/15 15:50 / nl
2967	1,3-Dichlorobenzene	ND	ug/L		0.50		E524.2	02/26/15 15:50 / nl
2969	1,4-Dichlorobenzene	ND	ug/L		0.50	75	E524.2	02/26/15 15:50 / nl
2212	Dichlorodifluoromethane	ND	ug/L		0.50		E524.2	02/26/15 15:50 / nl
2978	1,1-Dichloroethane	ND	ug/L		0.50		E524.2	02/26/15 15:50 / nl
2980	1,2-Dichloroethane	ND	ug/L		0.50	5	E524.2	02/26/15 15:50 / nl
2946	1,2-Dibromoethane	ND	ug/L		0.50	0.05	E524.2	02/26/15 15:50 / nl
2977	1,1-Dichloroethene	ND	ug/L		0.50	7	E524.2	02/26/15 15:50 / nl
2380	cis-1,2-Dichloroethene	ND	ug/L		0.50	70	E524.2	02/26/15 15:50 / nl
2979	trans-1,2-Dichloroethene	ND	ug/L		0.50	100	E524.2	02/26/15 15:50 / nl
2983	1,2-Dichloropropane	ND	ug/L		0.50	5	E524.2	02/26/15 15:50 / nl
2412	1,3-Dichloropropane	ND	ug/L		0.50		E524.2	02/26/15 15:50 / nl
2416	2,2-Dichloropropane	ND	ug/L		0.50		E524.2	02/26/15 15:50 / nl
2410	1,1-Dichloropropene	ND	ug/L		0.50		E524.2	02/26/15 15:50 / nl

Report Definitions:
RL - Analyte reporting limit.
QCL - Quality control limit.
J - Estimated value. The analyte was present but less than the reporting limit.
MCL - Maximum contaminant level.
ND - Not detected at the reporting limit.

LABORATORY ANALYTICAL REPORT

Prepared by Billings, MT Branch

Client: Power-Teton County Water and Sewer Dist
Client Sample ID: EP002
PWS #: MT0000311 **Name:** POWER TETON COUNTY WATER DIST
Facility ID: TP002
SamplingPoint/Location: EP502 / EP002
Project ID: MT0000311
Collector's Name: Karol Walker **Contact Phone #:**
Compliance Sample: YES **Sample Type:** RT

Lab ID: B15021907-001
Report Date: 03/06/15
Collection Date: 02/24/15 10:00
Date Received: 02/26/15
Matrix: Drinking Water
Federal ID#: MT00005

FRDS	Analyses	Result	Units	Qual	RL	MCL/ QCL	Method	Analysis Date / By
VOLATILE ORGANIC COMPOUNDS								
2413	cis-1,3-Dichloropropene	ND	ug/L		0.50		E524.2	02/26/15 15:50 / nl
2224	trans-1,3-Dichloropropene	ND	ug/L		0.50		E524.2	02/26/15 15:50 / nl
2992	Ethylbenzene	0.11	ug/L	J	0.50	700	E524.2	02/26/15 15:50 / nl
2246	Hexachlorobutadiene	ND	ug/L		0.50		E524.2	02/26/15 15:50 / nl
2994	Isopropylbenzene	ND	ug/L		0.50		E524.2	02/26/15 15:50 / nl
2030	p-Isopropyltoluene	ND	ug/L		0.50		E524.2	02/26/15 15:50 / nl
2251	Methyl tert-butyl ether (MTBE)	ND	ug/L		0.50		E524.2	02/26/15 15:50 / nl
2964	Methylene chloride	ND	ug/L		0.50	5	E524.2	02/26/15 15:50 / nl
2248	Naphthalene	ND	ug/L		0.50		E524.2	02/26/15 15:50 / nl
2998	n-Propylbenzene	ND	ug/L		0.50		E524.2	02/26/15 15:50 / nl
2996	Styrene	ND	ug/L		0.50	100	E524.2	02/26/15 15:50 / nl
2986	1,1,1,2-Tetrachloroethane	ND	ug/L		0.50		E524.2	02/26/15 15:50 / nl
2988	1,1,2,2-Tetrachloroethane	ND	ug/L		0.50		E524.2	02/26/15 15:50 / nl
2987	Tetrachloroethene	ND	ug/L		0.50	5	E524.2	02/26/15 15:50 / nl
2991	Toluene	ND	ug/L		0.50	1000	E524.2	02/26/15 15:50 / nl
2420	1,2,3-Trichlorobenzene	ND	ug/L		0.50		E524.2	02/26/15 15:50 / nl
2378	1,2,4-Trichlorobenzene	ND	ug/L		0.50	70	E524.2	02/26/15 15:50 / nl
2981	1,1,1-Trichloroethane	ND	ug/L		0.50	200	E524.2	02/26/15 15:50 / nl
2985	1,1,2-Trichloroethane	ND	ug/L		0.50	5	E524.2	02/26/15 15:50 / nl
2984	Trichloroethene	ND	ug/L		0.50	5	E524.2	02/26/15 15:50 / nl
2218	Trichlorofluoromethane	ND	ug/L		0.50		E524.2	02/26/15 15:50 / nl
2414	1,2,3-Trichloropropane	ND	ug/L		0.50		E524.2	02/26/15 15:50 / nl
2950	Trihalomethanes, Total	26	ug/L		0.50	80	E524.2	02/26/15 15:50 / nl
2418	1,2,4-Trimethylbenzene	ND	ug/L		0.50		E524.2	02/26/15 15:50 / nl
2424	1,3,5-Trimethylbenzene	ND	ug/L		0.50		E524.2	02/26/15 15:50 / nl
2976	Vinyl chloride	ND	ug/L		0.50	2	E524.2	02/26/15 15:50 / nl
2963	m+p-Xylenes	0.48	ug/L	J	0.50		E524.2	02/26/15 15:50 / nl
2997	o-Xylene	0.18	ug/L	J	0.50		E524.2	02/26/15 15:50 / nl
2955	Xylenes, Total	0.66	ug/L		0.50	10000	E524.2	02/26/15 15:50 / nl
	Surr: p-Bromofluorobenzene	110	%REC			80-120	E524.2	02/26/15 15:50 / nl
	Surr: 1,2-Dichloroethane-d4	100	%REC			74-127	E524.2	02/26/15 15:50 / nl
	Surr: Toluene-d8	112	%REC			80-120	E524.2	02/26/15 15:50 / nl
SEMI-VOLATILE ORGANIC COMPOUNDS								
2051	Alachlor	ND	ug/L		0.10	2	E525.2	03/02/15 23:33 / msk
2356	Aldrin	ND	ug/L		0.10		E525.2	03/02/15 23:33 / msk

Report Definitions:
RL - Analyte reporting limit.
QCL - Quality control limit.
J - Estimated value. The analyte was present but less than the reporting limit.
MCL - Maximum contaminant level.
ND - Not detected at the reporting limit.

LABORATORY ANALYTICAL REPORT

Prepared by Billings, MT Branch

Client: Power-Teton County Water and Sewer Dist
Client Sample ID: EP002
PWS #: MT0000311 **Name:** POWER TETON COUNTY WATER DIST
Facility ID: TP002
SamplingPoint/Location: EP502 / EP002
Project ID: MT0000311
Collector's Name: Karol Walker **Contact Phone #:**
Compliance Sample: YES **Sample Type:** RT

Lab ID: B15021907-001
Report Date: 03/06/15
Collection Date: 02/24/15 10:00
Date Received: 02/26/15
Matrix: Drinking Water
Federal ID#: MT00005

FRDS	Analyses	Result	Units	Qual	RL	MCL/ QCL	Method	Analysis Date / By
	SEMI-VOLATILE ORGANIC COMPOUNDS							
2050	Atrazine	ND	ug/L		0.10	3	E525.2	03/02/15 23:33 / msk
2306	Benzo(a)pyrene	ND	ug/L		0.10	0.2	E525.2	03/02/15 23:33 / msk
2076	Butachlor	ND	ug/L		0.10		E525.2	03/02/15 23:33 / msk
2959	Chlordane	ND	ug/L		1.0	2	E525.2	03/02/15 23:33 / msk
2035	di(2-ethylhexyl)Adipate	ND	ug/L		0.50	400	E525.2	03/02/15 23:33 / msk
2039	di(2-ethylhexyl)Phthalate	ND	ug/L		2.0	6	E525.2	03/02/15 23:33 / msk
2070	Dieldrin	ND	ug/L		0.10		E525.2	03/02/15 23:33 / msk
2005	Endrin	ND	ug/L		0.10	2	E525.2	03/02/15 23:33 / msk
2010	gamma-BHC (Lindane)	ND	ug/L		0.10	0.2	E525.2	03/02/15 23:33 / msk
2065	Heptachlor	ND	ug/L		0.10	0.4	E525.2	03/02/15 23:33 / msk
2067	Heptachlor epoxide	ND	ug/L		0.10	0.2	E525.2	03/02/15 23:33 / msk
2274	Hexachlorobenzene	ND	ug/L		0.10	1	E525.2	03/02/15 23:33 / msk
2042	Hexachlorocyclopentadiene	ND	ug/L		0.10	50	E525.2	03/02/15 23:33 / msk
2015	Methoxychlor	ND	ug/L		0.10	40	E525.2	03/02/15 23:33 / msk
2045	Metolachlor	ND	ug/L		0.10		E525.2	03/02/15 23:33 / msk
2595	Metribuzin	ND	ug/L		0.10		E525.2	03/02/15 23:33 / msk
2077	Propachlor	ND	ug/L		0.10		E525.2	03/02/15 23:33 / msk
2037	Simazine	ND	ug/L		0.10	4	E525.2	03/02/15 23:33 / msk
2020	Toxaphene	ND	ug/L		2.0	3	E525.2	03/02/15 23:33 / msk
	Surr: 1,3-Dimethyl-2-nitrobenzene	115	%REC			70-130	E525.2	03/02/15 23:33 / msk
	Surr: Perylene-d12	115	%REC			70-130	E525.2	03/02/15 23:33 / msk
	Surr: Pyrene-d10	102	%REC			70-130	E525.2	03/02/15 23:33 / msk
	Surr: Triphenylphosphate	102	%REC			70-130	E525.2	03/02/15 23:33 / msk
	PESTICIDES, BY HPLC							
2047	Aldicarb	ND	ug/L		0.40	3	E531.1	03/02/15 20:21 / eli-ca
2044	Aldicarb sulfone	ND	ug/L		0.40	2	E531.1	03/02/15 20:21 / eli-ca
2043	Aldicarb sulfoxide	ND	ug/L		0.40	4	E531.1	03/02/15 20:21 / eli-ca
2021	Carbaryl	ND	ug/L		0.40		E531.1	03/02/15 20:21 / eli-ca
2046	Carbofuran	ND	ug/L		0.40	40	E531.1	03/02/15 20:21 / eli-ca
2066	3-Hydroxycarbofuran	ND	ug/L		0.40		E531.1	03/02/15 20:21 / eli-ca
2024	Methiocarb	ND	ug/L		0.40		E531.1	03/02/15 20:21 / eli-ca
2022	Methomyl	ND	ug/L		0.40		E531.1	03/02/15 20:21 / eli-ca
2036	Oxamyl	ND	ug/L		0.40	200	E531.1	03/02/15 20:21 / eli-ca
	Surr: BDMC	134	%REC	S		70-130	E531.1	03/02/15 20:21 / eli-ca

- Response is above standard QA limit. This could indicate a high bias for the sample results. Since there were no detectable analyte responses, this batch is approved.

Report Definitions:
RL - Analyte reporting limit.
QCL - Quality control limit.
S - Spike recovery outside of advisory limits.
MCL - Maximum contaminant level.
ND - Not detected at the reporting limit.

LABORATORY ANALYTICAL REPORT

Prepared by Billings, MT Branch

Client: Power-Teton County Water and Sewer Dist
Client Sample ID: EP002
PWS #: MT0000311 **Name:** POWER TETON COUNTY WATER DIST
Facility ID: TP002
SamplingPoint/Location: EP502 / EP002
Project ID: MT0000311
Collector's Name: Karol Walker **Contact Phone #:**
Compliance Sample: YES **Sample Type:** RT

Lab ID: B15021907-001
Report Date: 03/06/15
Collection Date: 02/24/15 10:00
Date Received: 02/26/15
Matrix: Drinking Water
Federal ID#: MT00005

FRDS	Analyses	Result	Units	Qual	RL	MCL/ QCL	Method	Analysis Date / By
	HERBICIDES							
2110	2,4,5-TP (Silvex)	ND	ug/L		0.25	50	E515.4	02/27/15 21:39 / jph
2105	2,4-D	ND	ug/L		1.0	70	E515.4	02/27/15 21:39 / jph
2106	2,4-DB	ND	ug/L		1.0		E515.4	02/27/15 21:39 / jph
2031	Dalapon	ND	ug/L		2.5	200	E515.4	02/27/15 21:39 / jph
2440	Dicamba	ND	ug/L		1.0		E515.4	02/27/15 21:39 / jph
2206	Dichlorprop	ND	ug/L		1.0		E515.4	02/27/15 21:39 / jph
2041	Dinoseb	ND	ug/L		1.0	7	E515.4	02/27/15 21:39 / jph
2326	Pentachlorophenol	ND	ug/L		0.10	1	E515.4	02/27/15 21:39 / jph
2040	Picloram	ND	ug/L		0.50	500	E515.4	02/27/15 21:39 / jph
	Surr: 2,4-Dichlorophenylacetic acid	101	%REC			70-130	E515.4	02/27/15 21:39 / jph

Report Definitions:
RL - Analyte reporting limit.
QCL - Quality control limit.
MCL - Maximum contaminant level.
ND - Not detected at the reporting limit.

LABORATORY ANALYTICAL REPORT

Prepared by Billings, MT Branch

Client: Power-Teton County Water and Sewer Dist
Client Sample ID: Trip Blank Lot#020515 B-PG SHP0264
PWS #: MT0000311 **Name:** POWER TETON COUNTY WATER DIST
Facility ID:
SamplingPoint/Location: Trip Blank Lot#02051
Project ID: MT0000311
Collector's Name: Not Provided **Contact Phone #:**
Compliance Sample: YES **Sample Type:** RT

Lab ID: B15021907-002
Report Date: 03/06/15
Collection Date: 02/24/15 10:00
Date Received: 02/26/15
Matrix: Trip Blank
Federal ID#: MT00005

FRDS	Analyses	Result	Units	Qual	RL	MCL/ QCL	Method	Analysis Date / By
VOLATILE ORGANIC COMPOUNDS								
2990	Benzene	ND	ug/L		0.50	5	E524.2	02/26/15 15:19 / nl
2993	Bromobenzene	ND	ug/L		0.50		E524.2	02/26/15 15:19 / nl
2430	Bromochloromethane	ND	ug/L		0.50		E524.2	02/26/15 15:19 / nl
2943	Bromodichloromethane	ND	ug/L		0.50		E524.2	02/26/15 15:19 / nl
2942	Bromoform	ND	ug/L		0.50		E524.2	02/26/15 15:19 / nl
2214	Bromomethane	ND	ug/L		0.50		E524.2	02/26/15 15:19 / nl
2422	n-Butylbenzene	ND	ug/L		0.50		E524.2	02/26/15 15:19 / nl
2428	sec-Butylbenzene	ND	ug/L		0.50		E524.2	02/26/15 15:19 / nl
2426	tert-Butylbenzene	ND	ug/L		0.50		E524.2	02/26/15 15:19 / nl
2982	Carbon tetrachloride	ND	ug/L		0.50	5	E524.2	02/26/15 15:19 / nl
2989	Chlorobenzene	ND	ug/L		0.50	100	E524.2	02/26/15 15:19 / nl
2944	Chlorodibromomethane	ND	ug/L		0.50		E524.2	02/26/15 15:19 / nl
2216	Chloroethane	ND	ug/L		0.50		E524.2	02/26/15 15:19 / nl
2941	Chloroform	ND	ug/L		0.50		E524.2	02/26/15 15:19 / nl
2210	Chloromethane	ND	ug/L		0.50		E524.2	02/26/15 15:19 / nl
2965	2-Chlorotoluene	ND	ug/L		0.50		E524.2	02/26/15 15:19 / nl
2966	4-Chlorotoluene	ND	ug/L		0.50		E524.2	02/26/15 15:19 / nl
2931	1,2-Dibromo-3-chloropropane	ND	ug/L		1.0	0.2	E524.2	02/26/15 15:19 / nl
2408	Dibromomethane	ND	ug/L		0.50		E524.2	02/26/15 15:19 / nl
2968	1,2-Dichlorobenzene	ND	ug/L		0.50	600	E524.2	02/26/15 15:19 / nl
2967	1,3-Dichlorobenzene	ND	ug/L		0.50		E524.2	02/26/15 15:19 / nl
2969	1,4-Dichlorobenzene	ND	ug/L		0.50	75	E524.2	02/26/15 15:19 / nl
2212	Dichlorodifluoromethane	ND	ug/L		0.50		E524.2	02/26/15 15:19 / nl
2978	1,1-Dichloroethane	ND	ug/L		0.50		E524.2	02/26/15 15:19 / nl
2980	1,2-Dichloroethane	ND	ug/L		0.50	5	E524.2	02/26/15 15:19 / nl
2946	1,2-Dibromoethane	ND	ug/L		0.50	0.05	E524.2	02/26/15 15:19 / nl
2977	1,1-Dichloroethene	ND	ug/L		0.50	7	E524.2	02/26/15 15:19 / nl
2380	cis-1,2-Dichloroethene	ND	ug/L		0.50	70	E524.2	02/26/15 15:19 / nl
2979	trans-1,2-Dichloroethene	ND	ug/L		0.50	100	E524.2	02/26/15 15:19 / nl
2983	1,2-Dichloropropane	ND	ug/L		0.50	5	E524.2	02/26/15 15:19 / nl
2412	1,3-Dichloropropane	ND	ug/L		0.50		E524.2	02/26/15 15:19 / nl
2416	2,2-Dichloropropane	ND	ug/L		0.50		E524.2	02/26/15 15:19 / nl
2410	1,1-Dichloropropene	ND	ug/L		0.50		E524.2	02/26/15 15:19 / nl
2413	cis-1,3-Dichloropropene	ND	ug/L		0.50		E524.2	02/26/15 15:19 / nl
2224	trans-1,3-Dichloropropene	ND	ug/L		0.50		E524.2	02/26/15 15:19 / nl
2992	Ethylbenzene	ND	ug/L		0.50	700	E524.2	02/26/15 15:19 / nl

Report Definitions:
RL - Analyte reporting limit.
QCL - Quality control limit.
MCL - Maximum contaminant level.
ND - Not detected at the reporting limit.

LABORATORY ANALYTICAL REPORT

Prepared by Billings, MT Branch

Client: Power-Teton County Water and Sewer Dist
Client Sample ID: Trip Blank Lot#020515 B-PG SHP0264
PWS #: MT0000311 **Name:** POWER TETON COUNTY WATER DIST
Facility ID:
SamplingPoint/Location: Trip Blank Lot#02051
Project ID: MT0000311
Collector's Name: Not Provided **Contact Phone #:**
Compliance Sample: YES **Sample Type:** RT

Lab ID: B15021907-002
Report Date: 03/06/15
Collection Date: 02/24/15 10:00
Date Received: 02/26/15
Matrix: Trip Blank
Federal ID#: MT00005

FRDS	Analyses	Result	Units	Qual	RL	MCL/ QCL	Method	Analysis Date / By
VOLATILE ORGANIC COMPOUNDS								
2246	Hexachlorobutadiene	ND	ug/L		0.50		E524.2	02/26/15 15:19 / nl
2994	Isopropylbenzene	ND	ug/L		0.50		E524.2	02/26/15 15:19 / nl
2030	p-Isopropyltoluene	ND	ug/L		0.50		E524.2	02/26/15 15:19 / nl
2251	Methyl tert-butyl ether (MTBE)	ND	ug/L		0.50		E524.2	02/26/15 15:19 / nl
2964	Methylene chloride	0.22	ug/L	J	0.50	5	E524.2	02/26/15 15:19 / nl
2248	Naphthalene	ND	ug/L		0.50		E524.2	02/26/15 15:19 / nl
2998	n-Propylbenzene	ND	ug/L		0.50		E524.2	02/26/15 15:19 / nl
2996	Styrene	ND	ug/L		0.50	100	E524.2	02/26/15 15:19 / nl
2986	1,1,1,2-Tetrachloroethane	ND	ug/L		0.50		E524.2	02/26/15 15:19 / nl
2988	1,1,2,2-Tetrachloroethane	ND	ug/L		0.50		E524.2	02/26/15 15:19 / nl
2987	Tetrachloroethene	ND	ug/L		0.50	5	E524.2	02/26/15 15:19 / nl
2991	Toluene	ND	ug/L		0.50	1000	E524.2	02/26/15 15:19 / nl
2420	1,2,3-Trichlorobenzene	ND	ug/L		0.50		E524.2	02/26/15 15:19 / nl
2378	1,2,4-Trichlorobenzene	ND	ug/L		0.50	70	E524.2	02/26/15 15:19 / nl
2981	1,1,1-Trichloroethane	ND	ug/L		0.50	200	E524.2	02/26/15 15:19 / nl
2985	1,1,2-Trichloroethane	ND	ug/L		0.50	5	E524.2	02/26/15 15:19 / nl
2984	Trichloroethene	ND	ug/L		0.50	5	E524.2	02/26/15 15:19 / nl
2218	Trichlorofluoromethane	ND	ug/L		0.50		E524.2	02/26/15 15:19 / nl
2414	1,2,3-Trichloropropane	ND	ug/L		0.50		E524.2	02/26/15 15:19 / nl
2950	Trihalomethanes, Total	ND	ug/L		0.50	80	E524.2	02/26/15 15:19 / nl
2418	1,2,4-Trimethylbenzene	ND	ug/L		0.50		E524.2	02/26/15 15:19 / nl
2424	1,3,5-Trimethylbenzene	ND	ug/L		0.50		E524.2	02/26/15 15:19 / nl
2976	Vinyl chloride	ND	ug/L		0.50	2	E524.2	02/26/15 15:19 / nl
2963	m+p-Xylenes	ND	ug/L		0.50		E524.2	02/26/15 15:19 / nl
2997	o-Xylene	ND	ug/L		0.50		E524.2	02/26/15 15:19 / nl
2955	Xylenes, Total	ND	ug/L		0.50	10000	E524.2	02/26/15 15:19 / nl
	Surr: p-Bromofluorobenzene	105	%REC			80-120	E524.2	02/26/15 15:19 / nl
	Surr: 1,2-Dichloroethane-d4	92.0	%REC			74-127	E524.2	02/26/15 15:19 / nl
	Surr: Toluene-d8	111	%REC			80-120	E524.2	02/26/15 15:19 / nl

Report Definitions:
RL - Analyte reporting limit.
QCL - Quality control limit.
J - Estimated value. The analyte was present but less than the reporting limit.
MCL - Maximum contaminant level.
ND - Not detected at the reporting limit.

ANALYTICAL SUMMARY REPORT

2015 TTHM + HAAS

August 27, 2015

Power-Teton County Water and Sewer Dist
PO Box 176
Power, MT 59468

Work Order: B15081799

Project Name: MT0000311

Energy Laboratories Inc Billings MT received the following 2 samples for Power-Teton County Water and Sewer Dist on 8/20/2015 for analysis.

Lab ID	Client Sample ID	Collect Date	Receive Date	Matrix	Test
B15081799-001	505 Teton	08/19/15 9:15	08/20/15	Drinking Water	Haloacetic Acid Liquid-Liquid Ext. (VOA) 552-Haloacetic Acids-(HAAs) 524-Purgeable Organics, Trihalomethanes
B15081799-002	Trip Blank Lot 080515 B-NL SHP0265	08/19/15 9:15	08/20/15	Trip Blank	524-Purgeable Organics, Trihalomethanes

The analyses presented in this report were performed by Energy Laboratories, Inc., 1120 S 27th St., Billings, MT 59101, unless otherwise noted. Any exceptions or problems with the analyses are noted in the Laboratory Analytical Report, the QA/QC Summary Report, or the Case Narrative.

The results as reported relate only to the item(s) submitted for testing.

If you have any questions regarding these test results, please call.

Report Approved By: William T Brown
President

Digitally signed by Bill Brown
Date: 2015.08.27 07:53:36 -06:00

LABORATORY ANALYTICAL REPORT

Prepared by Billings, MT Branch

Client: Power-Teton County Water and Sewer Dist
Client Sample ID: 505 Teton
PWS #: MT0000311 **Name:** POWER TETON COUNTY WATER DIST
Facility ID: DS001
SamplingPoint/Location: DBP1 / 505 Teton
Project ID: MT0000311
Collector's Name: Karol Walker **Contact Phone #:**
Compliance Sample: YES **Sample Type:** RT

Lab ID: B15081799-001
Report Date: 08/27/15
Collection Date: 08/19/15 09:15
Date Received: 08/20/15
Matrix: Drinking Water
Federal ID#: MT00005

FRDS	Analyses	Result	Units	Qual	RL	MCL/ QCL	Method	Analysis Date / By
	TRIHALOMETHANES							
2943	Bromodichloromethane	11	ug/L		0.50		E524.2	08/21/15 05:43 / nl
2942	Bromoform	ND	ug/L		0.50		E524.2	08/21/15 05:43 / nl
2944	Chlorodibromomethane	1.9	ug/L		0.50		E524.2	08/21/15 05:43 / nl
2941	Chloroform	38	ug/L		0.50		E524.2	08/21/15 05:43 / nl
2950	Trihalomethanes, Total	51	ug/L		0.50	80	E524.2	08/21/15 05:43 / nl
	Surr: 1,2-Dichloroethane-d4	112	%REC			74-127	E524.2	08/21/15 05:43 / nl
	Surr: p-Bromofluorobenzene	103	%REC			80-120	E524.2	08/21/15 05:43 / nl
	Surr: Toluene-d8	106	%REC			80-120	E524.2	08/21/15 05:43 / nl
	HALOACETIC ACIDS							
2454	Dibromoacetic acid	0.87	ug/L		0.25		E552.2	08/22/15 20:11 / jem
2451	Dichloroacetic acid	20	ug/L		3.8		E552.2	08/26/15 13:43 / jem
2453	Monobromoacetic acid	ND	ug/L		0.50		E552.2	08/22/15 20:11 / jem
2450	Monochloroacetic acid	1.8	ug/L		0.75		E552.2	08/22/15 20:11 / jem
2452	Trichloroacetic acid	16	ug/L		2.5		E552.2	08/26/15 13:43 / jem
2456	Total Regulated Haloacetic Acids	39	ug/L		0.25	60	E552.2	08/22/15 20:11 / jem
2455	Bromochloroacetic acid	4.8	ug/L		0.50		E552.2	08/22/15 20:11 / jem
	Surr: 2,3-Dibromopropionic acid	82.0	%REC			70-130	E552.2	08/22/15 20:11 / jem

Report Definitions:
RL - Analyte reporting limit.
QCL - Quality control limit.
MCL - Maximum contaminant level.
ND - Not detected at the reporting limit.

LABORATORY ANALYTICAL REPORT

Prepared by Billings, MT Branch

Client: Power-Teton County Water and Sewer Dist
Client Sample ID: Trip Blank Lot 080515 B-NL SHP0265
PWS #: MT0000311 **Name:** POWER TETON COUNTY WATER DIST
Facility ID:
SamplingPoint/Location: Trip Blank Lot 08051
Project ID: MT0000311
Collector's Name: Karol Walker **Contact Phone #:**
Compliance Sample: YES **Sample Type:** RT

Lab ID: B15081799-002
Report Date: 08/27/15
Collection Date: 08/19/15 09:15
Date Received: 08/20/15
Matrix: Trip Blank
Federal ID#: MT00005

FRDS	Analyses	Result	Units	Qual	RL	MCL/ QCL	Method	Analysis Date / By
	TRIHALOMETHANES							
2943	Bromodichloromethane	ND	ug/L		0.50		E524.2	08/20/15 17:55 / nl
2942	Bromoform	ND	ug/L		0.50		E524.2	08/20/15 17:55 / nl
2944	Chlorodibromomethane	ND	ug/L		0.50		E524.2	08/20/15 17:55 / nl
2941	Chloroform	ND	ug/L		0.50		E524.2	08/20/15 17:55 / nl
2950	Trihalomethanes, Total	ND	ug/L		0.50	80	E524.2	08/20/15 17:55 / nl
	Surr: 1,2-Dichloroethane-d4	106	%REC			74-127	E524.2	08/20/15 17:55 / nl
	Surr: p-Bromofluorobenzene	104	%REC			80-120	E524.2	08/20/15 17:55 / nl
	Surr: Toluene-d8	100	%REC			80-120	E524.2	08/20/15 17:55 / nl

Report Definitions:
RL - Analyte reporting limit.
QCL - Quality control limit.
MCL - Maximum contaminant level.
ND - Not detected at the reporting limit.

ANALYTICAL SUMMARY REPORT

NITRATE
VOC
2016

March 30, 2016

Power-Teton County Water and Sewer Dist
PO Box 176
Power, MT 59468

Work Order: B16031819

Project Name: MT0000311

Energy Laboratories Inc Billings MT received the following 2 samples for Power-Teton County Water and Sewer Dist on 3/22/2016 for analysis.

Lab ID	Client Sample ID	Collect Date	Receive Date	Matrix	Test
B16031819-001	EP002	03/21/16 8:00	03/22/16	Drinking Water	Nitrogen, Nitrate + Nitrite 524-Purgeable Organics, SDWA
B16031819-002	Trip Blank Lot021816 B-PF SHP0267	03/21/16 8:00	03/22/16	Trip Blank	524-Purgeable Organics, SDWA

The analyses presented in this report were performed by Energy Laboratories, Inc., 1120 S 27th St., Billings, MT 59101, unless otherwise noted. Any exceptions or problems with the analyses are noted in the Laboratory Analytical Report, the QA/QC Summary Report, or the Case Narrative.

The results as reported relate only to the item(s) submitted for testing.

If you have any questions regarding these test results, please call.

Report Approved By: William T Brown
President

Digitally signed by
Bill Brown
Date: 2016.03.30 15:36:34 -06:00

LABORATORY ANALYTICAL REPORT

Prepared by Billings, MT Branch

Client: Power-Teton County Water and Sewer Dist
Client Sample ID: EP002
PWS #: MT0000311 **Name:** POWER TETON COUNTY WATER DIST
Facility ID: TP002
SamplingPoint/Location: EP502 / EP002
Project ID: MT0000311
Collector's Name: Karol Walker **Contact Phone #:**
Compliance Sample: YES **Sample Type:** RT

Lab ID: B16031819-001
Report Date: 03/30/16
Collection Date: 03/21/16 08:00
Date Received: 03/22/16
Matrix: Drinking Water
Federal ID#: MT00005

FRDS	Analyses	Result	Units	Qual	RL	MCL/ QCL	Method	Analysis Date / By
NUTRIENTS								
1038	Nitrogen, Nitrate+Nitrite as N	2.77	mg/L		0.01	10	E353.2	03/29/16 12:12 / ajm
VOLATILE ORGANIC COMPOUNDS								
2990	Benzene	ND	ug/L		0.50	5	E524.2	03/23/16 18:41 / msk
2993	Bromobenzene	ND	ug/L		0.50		E524.2	03/23/16 18:41 / msk
2430	Bromochloromethane	ND	ug/L		0.50		E524.2	03/23/16 18:41 / msk
2943	Bromodichloromethane	7.5	ug/L		0.50		E524.2	03/23/16 18:41 / msk
2942	Bromoform	ND	ug/L		0.50		E524.2	03/23/16 18:41 / msk
2214	Bromomethane	ND	ug/L		0.50		E524.2	03/23/16 18:41 / msk
2422	n-Butylbenzene	ND	ug/L		0.50		E524.2	03/23/16 18:41 / msk
2428	sec-Butylbenzene	ND	ug/L		0.50		E524.2	03/23/16 18:41 / msk
2426	tert-Butylbenzene	ND	ug/L		0.50		E524.2	03/23/16 18:41 / msk
2982	Carbon tetrachloride	ND	ug/L		0.50	5	E524.2	03/23/16 18:41 / msk
2989	Chlorobenzene	ND	ug/L		0.50	100	E524.2	03/23/16 18:41 / msk
2944	Chlorodibromomethane	3.3	ug/L		0.50		E524.2	03/23/16 18:41 / msk
2216	Chloroethane	ND	ug/L		0.50		E524.2	03/23/16 18:41 / msk
2941	Chloroform	8.6	ug/L		0.50		E524.2	03/23/16 18:41 / msk
2210	Chloromethane	ND	ug/L		0.50		E524.2	03/23/16 18:41 / msk
2965	2-Chlorotoluene	ND	ug/L		0.50		E524.2	03/23/16 18:41 / msk
2966	4-Chlorotoluene	ND	ug/L		0.50		E524.2	03/23/16 18:41 / msk
2931	1,2-Dibromo-3-chloropropane	ND	ug/L		1.0	0.2	E524.2	03/23/16 18:41 / msk
2408	Dibromomethane	ND	ug/L		0.50		E524.2	03/23/16 18:41 / msk
2968	1,2-Dichlorobenzene	ND	ug/L		0.50	600	E524.2	03/23/16 18:41 / msk
2967	1,3-Dichlorobenzene	ND	ug/L		0.50		E524.2	03/23/16 18:41 / msk
2969	1,4-Dichlorobenzene	ND	ug/L		0.50	75	E524.2	03/23/16 18:41 / msk
2212	Dichlorodifluoromethane	ND	ug/L		0.50		E524.2	03/23/16 18:41 / msk
2978	1,1-Dichloroethane	ND	ug/L		0.50		E524.2	03/23/16 18:41 / msk
2980	1,2-Dichloroethane	ND	ug/L		0.50	5	E524.2	03/23/16 18:41 / msk
2946	1,2-Dibromoethane	ND	ug/L		0.50	0.05	E524.2	03/23/16 18:41 / msk
2977	1,1-Dichloroethene	ND	ug/L		0.50	7	E524.2	03/23/16 18:41 / msk
2380	cis-1,2-Dichloroethene	ND	ug/L		0.50	70	E524.2	03/23/16 18:41 / msk
2979	trans-1,2-Dichloroethene	ND	ug/L		0.50	100	E524.2	03/23/16 18:41 / msk
2983	1,2-Dichloropropane	ND	ug/L		0.50	5	E524.2	03/23/16 18:41 / msk
2412	1,3-Dichloropropane	ND	ug/L		0.50		E524.2	03/23/16 18:41 / msk
2416	2,2-Dichloropropane	ND	ug/L		0.50		E524.2	03/23/16 18:41 / msk
2410	1,1-Dichloropropene	ND	ug/L		0.50		E524.2	03/23/16 18:41 / msk

Report Definitions: RL - Analyte reporting limit. MCL - Maximum contaminant level.
QCL - Quality control limit. ND - Not detected at the reporting limit.

LABORATORY ANALYTICAL REPORT

Prepared by Billings, MT Branch

Client: Power-Teton County Water and Sewer Dist
Client Sample ID: EP002
PWS #: MT0000311 **Name:** POWER TETON COUNTY WATER DIST
Facility ID: TP002
SamplingPoint/Location: EP502 / EP002
Project ID: MT0000311
Collector's Name: Karol Walker **Contact Phone #:**
Compliance Sample: YES **Sample Type:** RT

Lab ID: B16031819-001
Report Date: 03/30/16
Collection Date: 03/21/16 08:00
Date Received: 03/22/16
Matrix: Drinking Water
Federal ID#: MT00005

FRDS	Analyses	Result	Units	Qual	RL	MCL/ QCL	Method	Analysis Date / By
VOLATILE ORGANIC COMPOUNDS								
2413	cis-1,3-Dichloropropene	ND	ug/L		0.50		E524.2	03/23/16 18:41 / msk
2224	trans-1,3-Dichloropropene	ND	ug/L		0.50		E524.2	03/23/16 18:41 / msk
2992	Ethylbenzene	ND	ug/L		0.50	700	E524.2	03/23/16 18:41 / msk
2246	Hexachlorobutadiene	ND	ug/L		0.50		E524.2	03/23/16 18:41 / msk
2994	Isopropylbenzene	ND	ug/L		0.50		E524.2	03/23/16 18:41 / msk
2030	p-Isopropyltoluene	ND	ug/L		0.50		E524.2	03/23/16 18:41 / msk
2251	Methyl tert-butyl ether (MTBE)	ND	ug/L		0.50		E524.2	03/23/16 18:41 / msk
2964	Methylene chloride	ND	ug/L		0.50	5	E524.2	03/23/16 18:41 / msk
2248	Naphthalene	ND	ug/L		0.50		E524.2	03/23/16 18:41 / msk
2998	n-Propylbenzene	ND	ug/L		0.50		E524.2	03/23/16 18:41 / msk
2996	Styrene	ND	ug/L		0.50	100	E524.2	03/23/16 18:41 / msk
2986	1,1,1,2-Tetrachloroethane	ND	ug/L		0.50		E524.2	03/23/16 18:41 / msk
2988	1,1,2,2-Tetrachloroethane	ND	ug/L		0.50		E524.2	03/23/16 18:41 / msk
2987	Tetrachloroethene	ND	ug/L		0.50	5	E524.2	03/23/16 18:41 / msk
2991	Toluene	ND	ug/L		0.50	1000	E524.2	03/23/16 18:41 / msk
2420	1,2,3-Trichlorobenzene	ND	ug/L		0.50		E524.2	03/23/16 18:41 / msk
2378	1,2,4-Trichlorobenzene	ND	ug/L		0.50	70	E524.2	03/23/16 18:41 / msk
2981	1,1,1-Trichloroethane	ND	ug/L		0.50	200	E524.2	03/23/16 18:41 / msk
2985	1,1,2-Trichloroethane	ND	ug/L		0.50	5	E524.2	03/23/16 18:41 / msk
2984	Trichloroethene	ND	ug/L		0.50	5	E524.2	03/23/16 18:41 / msk
2218	Trichlorofluoromethane	ND	ug/L		0.50		E524.2	03/23/16 18:41 / msk
2414	1,2,3-Trichloropropane	ND	ug/L		0.50		E524.2	03/23/16 18:41 / msk
2950	Trihalomethanes, Total	19	ug/L		0.50	80	E524.2	03/23/16 18:41 / msk
2418	1,2,4-Trimethylbenzene	ND	ug/L		0.50		E524.2	03/23/16 18:41 / msk
2424	1,3,5-Trimethylbenzene	ND	ug/L		0.50		E524.2	03/23/16 18:41 / msk
2976	Vinyl chloride	ND	ug/L		0.50	2	E524.2	03/23/16 18:41 / msk
2963	m+p-Xylenes	ND	ug/L		0.50		E524.2	03/23/16 18:41 / msk
2997	o-Xylene	ND	ug/L		0.50		E524.2	03/23/16 18:41 / msk
2955	Xylenes, Total	ND	ug/L		0.50	10000	E524.2	03/23/16 18:41 / msk
	Surr: p-Bromofluorobenzene	106	%REC			80-120	E524.2	03/23/16 18:41 / msk
	Surr: 1,2-Dichloroethane-d4	99.0	%REC			74-127	E524.2	03/23/16 18:41 / msk
	Surr: Toluene-d8	104	%REC			80-120	E524.2	03/23/16 18:41 / msk

Report Definitions:
RL - Analyte reporting limit.
QCL - Quality control limit.
MCL - Maximum contaminant level.
ND - Not detected at the reporting limit.

LABORATORY ANALYTICAL REPORT

Prepared by Billings, MT Branch

Client: Power-Teton County Water and Sewer Dist
Client Sample ID: Trip Blank Lot021816 B-PF SHP0267
PWS #: MT0000311 **Name:** POWER TETON COUNTY WATER DIST
Facility ID:
SamplingPoint/Location: Trip Blank Lot021816
Project ID: MT0000311
Collector's Name: Not Provided **Contact Phone #:**
Compliance Sample: YES **Sample Type:** RT

Lab ID: B16031819-002
Report Date: 03/30/16
Collection Date: 03/21/16 08:00
Date Received: 03/22/16
Matrix: Trip Blank
Federal ID#: MT00005

FRDS Analyses	Result	Units	Qual	RL	MCL/ QCL	Method	Analysis Date / By
VOLATILE ORGANIC COMPOUNDS							
2990 Benzene	ND	ug/L		0.50	5	E524.2	03/23/16 15:38 / msk
2993 Bromobenzene	ND	ug/L		0.50		E524.2	03/23/16 15:38 / msk
2430 Bromochloromethane	ND	ug/L		0.50		E524.2	03/23/16 15:38 / msk
2943 Bromodichloromethane	ND	ug/L		0.50		E524.2	03/23/16 15:38 / msk
2942 Bromoform	ND	ug/L		0.50		E524.2	03/23/16 15:38 / msk
2214 Bromomethane	ND	ug/L		0.50		E524.2	03/23/16 15:38 / msk
2422 n-Butylbenzene	ND	ug/L		0.50		E524.2	03/23/16 15:38 / msk
2428 sec-Butylbenzene	ND	ug/L		0.50		E524.2	03/23/16 15:38 / msk
2426 tert-Butylbenzene	ND	ug/L		0.50		E524.2	03/23/16 15:38 / msk
2982 Carbon tetrachloride	ND	ug/L		0.50	5	E524.2	03/23/16 15:38 / msk
2989 Chlorobenzene	ND	ug/L		0.50	100	E524.2	03/23/16 15:38 / msk
2944 Chlorodibromomethane	ND	ug/L		0.50		E524.2	03/23/16 15:38 / msk
2216 Chloroethane	ND	ug/L		0.50		E524.2	03/23/16 15:38 / msk
2941 Chloroform	ND	ug/L		0.50		E524.2	03/23/16 15:38 / msk
2210 Chloromethane	ND	ug/L		0.50		E524.2	03/23/16 15:38 / msk
2965 2-Chlorotoluene	ND	ug/L		0.50		E524.2	03/23/16 15:38 / msk
2966 4-Chlorotoluene	ND	ug/L		0.50		E524.2	03/23/16 15:38 / msk
2931 1,2-Dibromo-3-chloropropane	ND	ug/L		1.0	0.2	E524.2	03/23/16 15:38 / msk
2408 Dibromomethane	ND	ug/L		0.50		E524.2	03/23/16 15:38 / msk
2968 1,2-Dichlorobenzene	ND	ug/L		0.50	600	E524.2	03/23/16 15:38 / msk
2967 1,3-Dichlorobenzene	ND	ug/L		0.50		E524.2	03/23/16 15:38 / msk
2969 1,4-Dichlorobenzene	ND	ug/L		0.50	75	E524.2	03/23/16 15:38 / msk
2212 Dichlorodifluoromethane	ND	ug/L		0.50		E524.2	03/23/16 15:38 / msk
2978 1,1-Dichloroethane	ND	ug/L		0.50		E524.2	03/23/16 15:38 / msk
2980 1,2-Dichloroethane	ND	ug/L		0.50	5	E524.2	03/23/16 15:38 / msk
2946 1,2-Dibromoethane	ND	ug/L		0.50	0.05	E524.2	03/23/16 15:38 / msk
2977 1,1-Dichloroethene	ND	ug/L		0.50	7	E524.2	03/23/16 15:38 / msk
2380 cis-1,2-Dichloroethene	ND	ug/L		0.50	70	E524.2	03/23/16 15:38 / msk
2979 trans-1,2-Dichloroethene	ND	ug/L		0.50	100	E524.2	03/23/16 15:38 / msk
2983 1,2-Dichloropropane	ND	ug/L		0.50	5	E524.2	03/23/16 15:38 / msk
2412 1,3-Dichloropropane	ND	ug/L		0.50		E524.2	03/23/16 15:38 / msk
2416 2,2-Dichloropropane	ND	ug/L		0.50		E524.2	03/23/16 15:38 / msk
2410 1,1-Dichloropropene	ND	ug/L		0.50		E524.2	03/23/16 15:38 / msk
2413 cis-1,3-Dichloropropene	ND	ug/L		0.50		E524.2	03/23/16 15:38 / msk
2224 trans-1,3-Dichloropropene	ND	ug/L		0.50		E524.2	03/23/16 15:38 / msk
2992 Ethylbenzene	ND	ug/L		0.50	700	E524.2	03/23/16 15:38 / msk

Report Definitions:
RL - Analyte reporting limit.
QCL - Quality control limit.
MCL - Maximum contaminant level.
ND - Not detected at the reporting limit.

LABORATORY ANALYTICAL REPORT

Prepared by Billings, MT Branch

Client: Power-Teton County Water and Sewer Dist
Lab ID: B16031819-002
Client Sample ID: Trip Blank Lot021816 B-PF SHP0267
Report Date: 03/30/16
PWS #: MT0000311 **Name:** POWER TETON COUNTY WATER DIST
Collection Date: 03/21/16 08:00
Facility ID:
Date Received: 03/22/16
SamplingPoint/Location: Trip Blank Lot021816
Matrix: Trip Blank
Project ID: MT0000311
Federal ID#: MT00005
Collector's Name: Not Provided **Contact Phone #:**
Compliance Sample: YES **Sample Type:** RT

FRDS	Analyses	Result	Units	Qual	RL	MCL/ QCL	Method	Analysis Date / By
VOLATILE ORGANIC COMPOUNDS								
2246	Hexachlorobutadiene	ND	ug/L		0.50		E524.2	03/23/16 15:38 / msk
2994	Isopropylbenzene	ND	ug/L		0.50		E524.2	03/23/16 15:38 / msk
2030	p-Isopropyltoluene	ND	ug/L		0.50		E524.2	03/23/16 15:38 / msk
2251	Methyl tert-butyl ether (MTBE)	ND	ug/L		0.50		E524.2	03/23/16 15:38 / msk
2964	Methylene chloride	ND	ug/L		0.50	5	E524.2	03/23/16 15:38 / msk
2248	Naphthalene	ND	ug/L		0.50		E524.2	03/23/16 15:38 / msk
2998	n-Propylbenzene	ND	ug/L		0.50		E524.2	03/23/16 15:38 / msk
2996	Styrene	ND	ug/L		0.50	100	E524.2	03/23/16 15:38 / msk
2986	1,1,1,2-Tetrachloroethane	ND	ug/L		0.50		E524.2	03/23/16 15:38 / msk
2988	1,1,2,2-Tetrachloroethane	ND	ug/L		0.50		E524.2	03/23/16 15:38 / msk
2987	Tetrachloroethene	ND	ug/L		0.50	5	E524.2	03/23/16 15:38 / msk
2991	Toluene	ND	ug/L		0.50	1000	E524.2	03/23/16 15:38 / msk
2420	1,2,3-Trichlorobenzene	ND	ug/L		0.50		E524.2	03/23/16 15:38 / msk
2378	1,2,4-Trichlorobenzene	ND	ug/L		0.50	70	E524.2	03/23/16 15:38 / msk
2981	1,1,1-Trichloroethane	ND	ug/L		0.50	200	E524.2	03/23/16 15:38 / msk
2985	1,1,2-Trichloroethane	ND	ug/L		0.50	5	E524.2	03/23/16 15:38 / msk
2984	Trichloroethene	ND	ug/L		0.50	5	E524.2	03/23/16 15:38 / msk
2218	Trichlorofluoromethane	ND	ug/L		0.50		E524.2	03/23/16 15:38 / msk
2414	1,2,3-Trichloropropane	ND	ug/L		0.50		E524.2	03/23/16 15:38 / msk
2950	Trihalomethanes, Total	ND	ug/L		0.50	80	E524.2	03/23/16 15:38 / msk
2418	1,2,4-Trimethylbenzene	ND	ug/L		0.50		E524.2	03/23/16 15:38 / msk
2424	1,3,5-Trimethylbenzene	ND	ug/L		0.50		E524.2	03/23/16 15:38 / msk
2976	Vinyl chloride	ND	ug/L		0.50	2	E524.2	03/23/16 15:38 / msk
2963	m+p-Xylenes	ND	ug/L		0.50		E524.2	03/23/16 15:38 / msk
2997	o-Xylene	ND	ug/L		0.50		E524.2	03/23/16 15:38 / msk
2955	Xylenes, Total	ND	ug/L		0.50	10000	E524.2	03/23/16 15:38 / msk
	Surr: p-Bromofluorobenzene	108	%REC			80-120	E524.2	03/23/16 15:38 / msk
	Surr: 1,2-Dichloroethane-d4	103	%REC			74-127	E524.2	03/23/16 15:38 / msk
	Surr: Toluene-d8	105	%REC			80-120	E524.2	03/23/16 15:38 / msk

Report Definitions:
RL - Analyte reporting limit.
QCL - Quality control limit.
MCL - Maximum contaminant level.
ND - Not detected at the reporting limit.

ANALYTICAL SUMMARY REPORT

TTHM + HAA5
2016

August 17, 2016

Power-Teton County Water and Sewer Dist
PO Box 176
Power, MT 59468

Work Order: B16080845

Project Name: MT0000311

Energy Laboratories Inc Billings MT received the following 2 samples for Power-Teton County Water and Sewer Dist on 8/9/2016 for analysis.

Lab ID	Client Sample ID	Collect Date	Receive Date	Matrix	Test
B16080845-001	DBP1 505 Teton Ave	08/08/16 8:15	08/09/16	Drinking Water	Haloacetic Acid Liquid-Liquid Ext. (VOA) 552-Haloacetic Acids-(HAAs) 524-Purgeable Organics, Trihalomethanes
B16080845-002	Trip Blank Lot080216 B-JMP SHP0268	08/08/16 8:15	08/09/16	Trip Blank	524-Purgeable Organics, Trihalomethanes

The analyses presented in this report were performed by Energy Laboratories, Inc., 1120 S 27th St., Billings, MT 59101, unless otherwise noted. Any exceptions or problems with the analyses are noted in the Laboratory Analytical Report, the QA/QC Summary Report, or the Case Narrative.

The results as reported relate only to the item(s) submitted for testing.

If you have any questions regarding these test results, please call.

Report Approved By: William T Brown
President

Digitally signed by
Bill Brown
Date: 2016.08.17 11:04:01 -06:00

LABORATORY ANALYTICAL REPORT

Prepared by Billings, MT Branch

Client: Power-Teton County Water and Sewer Dist
Client Sample ID: DBP1 505 Teton Ave
PWS #: MT0000311 **Name:** POWER TETON COUNTY WATER DIST
Facility ID: DS001
SamplingPoint/Location: DBP1 / DBP1 505 Teton Ave
Project ID: MT0000311
Collector's Name: Karol Walker **Contact Phone #:**
Compliance Sample: YES **Sample Type:** RT

Lab ID: B16080845-001
Report Date: 08/17/16
Collection Date: 08/08/16 08:15
Date Received: 08/09/16
Matrix: Drinking Water
Federal ID#: MT00005

FRDS	Analyses	Result	Units	Qual	RL	MCL/ QCL	Method	Analysis Date / By
TRIHALOMETHANES								
2943	Bromodichloromethane	9.5	ug/L		0.50		E524.2	08/13/16 00:42 / msk
2942	Bromoform	ND	ug/L		0.50		E524.2	08/13/16 00:42 / msk
2944	Chlorodibromomethane	1.4	ug/L		0.50		E524.2	08/13/16 00:42 / msk
2941	Chloroform	38	ug/L		0.50		E524.2	08/13/16 00:42 / msk
2950	Trihalomethanes, Total	49	ug/L		0.50	80	E524.2	08/13/16 00:42 / msk
	Surr: 1,2-Dichloroethane-d4	110	%REC			74-127	E524.2	08/13/16 00:42 / msk
	Surr: p-Bromofluorobenzene	102	%REC			80-120	E524.2	08/13/16 00:42 / msk
	Surr: Toluene-d8	98.0	%REC			80-120	E524.2	08/13/16 00:42 / msk
HALOACETIC ACIDS								
2454	Dibromoacetic acid	0.29	ug/L		0.25		E552.2	08/12/16 20:17 / ldw
2451	Dichloroacetic acid	14	ug/L		0.75		E552.2	08/12/16 20:17 / ldw
2453	Monobromoacetic acid	ND	ug/L		0.50		E552.2	08/12/16 20:17 / ldw
2450	Monochloroacetic acid	1.3	ug/L		0.75		E552.2	08/12/16 20:17 / ldw
2452	Trichloroacetic acid	8.0	ug/L		0.50		E552.2	08/12/16 20:17 / ldw
2456	Total Regulated Haloacetic Acids	24	ug/L		0.25	60	E552.2	08/12/16 20:17 / ldw
2455	Bromochloroacetic acid	2.9	ug/L		0.50		E552.2	08/12/16 20:17 / ldw
	Surr: 2,3-Dibromopropionic acid	78.0	%REC			70-130	E552.2	08/12/16 20:17 / ldw

Report Definitions:
RL - Analyte reporting limit.
QCL - Quality control limit.
MCL - Maximum contaminant level.
ND - Not detected at the reporting limit.

LABORATORY ANALYTICAL REPORT

Prepared by Billings, MT Branch

Client: Power-Teton County Water and Sewer Dist
Client Sample ID: Trip Blank Lot080216 B-JMP SHP0268
PWS #: MT0000311 **Name:** POWER TETON COUNTY WATER DIST
Facility ID:
SamplingPoint/Location: Trip Blank Lot080216
Project ID: MT0000311
Collector's Name: Not Provided **Contact Phone #:**
Compliance Sample: YES **Sample Type:** RT

Lab ID: B16080845-002
Report Date: 08/17/16
Collection Date: 08/08/16 08:15
Date Received: 08/09/16
Matrix: Trip Blank
Federal ID#: MT00005

FRDS Analyses	Result	Units	Qual	RL	MCL/ QCL	Method	Analysis Date / By
TRIHALOMETHANES							
2943 Bromodichloromethane	ND	ug/L		0.50		E524.2	08/12/16 10:39 / msk
2942 Bromoform	ND	ug/L		0.50		E524.2	08/12/16 10:39 / msk
2944 Chlorodibromomethane	ND	ug/L		0.50		E524.2	08/12/16 10:39 / msk
2941 Chloroform	ND	ug/L		0.50		E524.2	08/12/16 10:39 / msk
2950 Trihalomethanes, Total	ND	ug/L		0.50	80	E524.2	08/12/16 10:39 / msk
Surr: 1,2-Dichloroethane-d4	96.0	%REC			74-127	E524.2	08/12/16 10:39 / msk
Surr: p-Bromofluorobenzene	102	%REC			80-120	E524.2	08/12/16 10:39 / msk
Surr: Toluene-d8	100	%REC			80-120	E524.2	08/12/16 10:39 / msk

Report Definitions:
RL - Analyte reporting limit.
QCL - Quality control limit.
MCL - Maximum contaminant level.
ND - Not detected at the reporting limit.

3-22-17 VOC +

ENERGY LABORATORIES
Trust our People. Trust our Data.
Billings, MT 800.735.4489 • Casper, WY 888.235.051
Gillette, WY 866.686.7175 • Helena, MT 877.472.071

ANALYTICAL SUMMARY REPORT

nitrate

March 31, 2017

Power-Teton County Water and Sewer Dist
PO Box 176
Power, MT 59468

Work Order: B17031740

Project Name: MT0000311

Energy Laboratories Inc Billings MT received the following 2 samples for Power-Teton County Water and Sewer Dist on 3/23/2017 for analysis.

Lab ID	Client Sample ID	Collect Date	Receive Date	Matrix	Test
B17031740-001	EP002	03/22/17 8:00	03/23/17	Drinking Water	Nitrogen, Nitrate + Nitrite 524-Purgeable Organics, SDWA
B17031740-002	Trip Blank Lot020517 B-MSK SHP0269	03/22/17 8:00	03/23/17	Trip Blank	524-Purgeable Organics, SDWA

The analyses presented in this report were performed by Energy Laboratories, Inc., 1120 S 27th St., Billings, MT 59101, unless otherwise noted. Any exceptions or problems with the analyses are noted in the Laboratory Analytical Report, the QA/QC Summary Report, or the Case Narrative.

The results as reported relate only to the item(s) submitted for testing.

If you have any questions regarding these test results, please call.

Report Approved By: William T Brown
President

Digitally signed by
Bill Brown
Date: 2017.03.31 08:33:03 -06:00

LABORATORY ANALYTICAL REPORT

Prepared by Billings, MT Branch

Client: Power-Teton County Water and Sewer Dist
Client Sample ID: EP002
PWS #: MT0000311 **Name:** POWER TETON COUNTY WATER DIST
Facility ID: TP002
SamplingPoint/Location: EP502 / EP002
Project ID: MT0000311
Collector's Name: Karol Walker **Contact Phone #:**
Compliance Sample: YES **Sample Type:** RT

Lab ID: B17031740-001
Report Date: 03/31/17
Collection Date: 03/22/17 08:00
Date Received: 03/23/17
Matrix: Drinking Water
Federal ID#: MT00005

FRDS Analyses	Result	Units	Qual	RL	MCL/ QCL	Method	Analysis Date / By
NUTRIENTS							
1038 Nitrogen, Nitrate+Nitrite as N	2.35	mg/L		0.01	10	E353.2	03/24/17 10:35 / ens
VOLATILE ORGANIC COMPOUNDS							
2990 Benzene	ND	ug/L		0.50	5	E524.2	03/24/17 20:56 / msk
2993 Bromobenzene	ND	ug/L		0.50		E524.2	03/24/17 20:56 / msk
2430 Bromochloromethane	ND	ug/L		0.50		E524.2	03/24/17 20:56 / msk
2943 Bromodichloromethane	23	ug/L		0.50		E524.2	03/24/17 20:56 / msk
2942 Bromoform	0.32	ug/L	J	0.50		E524.2	03/24/17 20:56 / msk
2214 Bromomethane	ND	ug/L		0.50		E524.2	03/24/17 20:56 / msk
2422 n-Butylbenzene	ND	ug/L		0.50		E524.2	03/24/17 20:56 / msk
2428 sec-Butylbenzene	ND	ug/L		0.50		E524.2	03/24/17 20:56 / msk
2426 tert-Butylbenzene	ND	ug/L		0.50		E524.2	03/24/17 20:56 / msk
2982 Carbon tetrachloride	ND	ug/L		0.50	5	E524.2	03/24/17 20:56 / msk
2989 Chlorobenzene	ND	ug/L		0.50	100	E524.2	03/24/17 20:56 / msk
2944 Chlorodibromomethane	9.2	ug/L		0.50		E524.2	03/24/17 20:56 / msk
2216 Chloroethane	ND	ug/L		0.50		E524.2	03/24/17 20:56 / msk
2941 Chloroform	39	ug/L		0.50		E524.2	03/24/17 20:56 / msk
2210 Chloromethane	ND	ug/L		0.50		E524.2	03/24/17 20:56 / msk
2965 2-Chlorotoluene	ND	ug/L		0.50		E524.2	03/24/17 20:56 / msk
2966 4-Chlorotoluene	ND	ug/L		0.50		E524.2	03/24/17 20:56 / msk
2931 1,2-Dibromo-3-chloropropane	ND	ug/L		1.0	0.2	E524.2	03/24/17 20:56 / msk
2408 Dibromomethane	ND	ug/L		0.50		E524.2	03/24/17 20:56 / msk
2968 1,2-Dichlorobenzene	ND	ug/L		0.50	600	E524.2	03/24/17 20:56 / msk
2967 1,3-Dichlorobenzene	ND	ug/L		0.50		E524.2	03/24/17 20:56 / msk
2969 1,4-Dichlorobenzene	ND	ug/L		0.50	75	E524.2	03/24/17 20:56 / msk
2212 Dichlorodifluoromethane	ND	ug/L		0.50		E524.2	03/24/17 20:56 / msk
2978 1,1-Dichloroethane	ND	ug/L		0.50		E524.2	03/24/17 20:56 / msk
2980 1,2-Dichloroethane	ND	ug/L		0.50	5	E524.2	03/24/17 20:56 / msk
2946 1,2-Dibromoethane	ND	ug/L		0.50	0.05	E524.2	03/24/17 20:56 / msk
2977 1,1-Dichloroethene	ND	ug/L		0.50	7	E524.2	03/24/17 20:56 / msk
2380 cis-1,2-Dichloroethene	ND	ug/L		0.50	70	E524.2	03/24/17 20:56 / msk
2979 trans-1,2-Dichloroethene	ND	ug/L		0.50	100	E524.2	03/24/17 20:56 / msk
2983 1,2-Dichloropropane	ND	ug/L		0.50	5	E524.2	03/24/17 20:56 / msk
2412 1,3-Dichloropropane	ND	ug/L		0.50		E524.2	03/24/17 20:56 / msk
2416 2,2-Dichloropropane	ND	ug/L		0.50		E524.2	03/24/17 20:56 / msk
2410 1,1-Dichloropropene	ND	ug/L		0.50		E524.2	03/24/17 20:56 / msk

Report Definitions:
RL - Analyte reporting limit.
QCL - Quality control limit.
J - Estimated value. The analyte was present but less than the reporting limit.
MCL - Maximum contaminant level.
ND - Not detected at the reporting limit.

LABORATORY ANALYTICAL REPORT

Prepared by Billings, MT Branch

Client: Power-Teton County Water and Sewer Dist
Client Sample ID: EP002
PWS #: MT0000311 **Name:** POWER TETON COUNTY WATER DIST
Facility ID: TP002
SamplingPoint/Location: EP502 / EP002
Project ID: MT0000311
Collector's Name: Karol Walker **Contact Phone #:**
Compliance Sample: YES **Sample Type:** RT

Lab ID: B17031740-001
Report Date: 03/31/17
Collection Date: 03/22/17 08:00
Date Received: 03/23/17
Matrix: Drinking Water
Federal ID#: MT00005

FRDS	Analyses	Result	Units	Qual	RL	MCL/ QCL	Method	Analysis Date / By
	VOLATILE ORGANIC COMPOUNDS							
2413	cis-1,3-Dichloropropene	ND	ug/L		0.50		E524.2	03/24/17 20:56 / msk
2224	trans-1,3-Dichloropropene	ND	ug/L		0.50		E524.2	03/24/17 20:56 / msk
2992	Ethylbenzene	ND	ug/L		0.50	700	E524.2	03/24/17 20:56 / msk
2246	Hexachlorobutadiene	ND	ug/L		0.50		E524.2	03/24/17 20:56 / msk
2994	Isopropylbenzene	ND	ug/L		0.50		E524.2	03/24/17 20:56 / msk
2030	p-Isopropyltoluene	ND	ug/L		0.50		E524.2	03/24/17 20:56 / msk
2251	Methyl tert-butyl ether (MTBE)	ND	ug/L		0.50		E524.2	03/24/17 20:56 / msk
2964	Methylene chloride	ND	ug/L		0.50	5	E524.2	03/24/17 20:56 / msk
2248	Naphthalene	ND	ug/L		0.50		E524.2	03/24/17 20:56 / msk
2998	n-Propylbenzene	ND	ug/L		0.50		E524.2	03/24/17 20:56 / msk
2996	Styrene	ND	ug/L		0.50	100	E524.2	03/24/17 20:56 / msk
2986	1,1,1,2-Tetrachloroethane	ND	ug/L		0.50		E524.2	03/24/17 20:56 / msk
2988	1,1,2,2-Tetrachloroethane	ND	ug/L		0.50		E524.2	03/24/17 20:56 / msk
2987	Tetrachloroethene	ND	ug/L		0.50	5	E524.2	03/24/17 20:56 / msk
2991	Toluene	ND	ug/L		0.50	1000	E524.2	03/24/17 20:56 / msk
2420	1,2,3-Trichlorobenzene	ND	ug/L		0.50		E524.2	03/24/17 20:56 / msk
2378	1,2,4-Trichlorobenzene	ND	ug/L		0.50	70	E524.2	03/24/17 20:56 / msk
2981	1,1,1-Trichloroethane	ND	ug/L		0.50	200	E524.2	03/24/17 20:56 / msk
2985	1,1,2-Trichloroethane	ND	ug/L		0.50	5	E524.2	03/24/17 20:56 / msk
2984	Trichloroethene	ND	ug/L		0.50	5	E524.2	03/24/17 20:56 / msk
2218	Trichlorofluoromethane	ND	ug/L		0.50		E524.2	03/24/17 20:56 / msk
2414	1,2,3-Trichloropropane	ND	ug/L		0.50		E524.2	03/24/17 20:56 / msk
2950	Trihalomethanes, Total	72	ug/L		0.50	80	E524.2	03/24/17 20:56 / msk
2418	1,2,4-Trimethylbenzene	ND	ug/L		0.50		E524.2	03/24/17 20:56 / msk
2424	1,3,5-Trimethylbenzene	ND	ug/L		0.50		E524.2	03/24/17 20:56 / msk
2976	Vinyl chloride	ND	ug/L		0.50	2	E524.2	03/24/17 20:56 / msk
2963	m+p-Xylenes	0.53	ug/L		0.50		E524.2	03/24/17 20:56 / msk
2997	o-Xylene	0.22	ug/L	J	0.50		E524.2	03/24/17 20:56 / msk
2955	Xylenes, Total	0.75	ug/L		0.50	10000	E524.2	03/24/17 20:56 / msk
	Surr: p-Bromofluorobenzene	110	%REC			70-130	E524.2	03/24/17 20:56 / msk
	Surr: 1,2-Dichloroethane-d4	99.0	%REC			70-130	E524.2	03/24/17 20:56 / msk
	Surr: Toluene-d8	86.0	%REC			70-130	E524.2	03/24/17 20:56 / msk

- Note: An analysis of the duplicate field sample is included in the QA/QC Summary Report.

Report Definitions:
RL - Analyte reporting limit.
QCL - Quality control limit.
J - Estimated value. The analyte was present but less than the reporting limit.
MCL - Maximum contaminant level.
ND - Not detected at the reporting limit.

LABORATORY ANALYTICAL REPORT

Prepared by Billings, MT Branch

Client: Power-Teton County Water and Sewer Dist
Client Sample ID: Trip Blank Lot020517 B-MSK SHP0269
PWS #: MT0000311 **Name:** POWER TETON COUNTY WATER DIST
Facility ID:
SamplingPoint/Location: Trip Blank Lot020517
Project ID: MT0000311
Collector's Name: Not Provided **Contact Phone #:**
Compliance Sample: YES **Sample Type:** RT

Lab ID: B17031740-002
Report Date: 03/31/17
Collection Date: 03/22/17 08:00
Date Received: 03/23/17
Matrix: Trip Blank
Federal ID#: MT00005

FRDS	Analyses	Result	Units	Qual	RL	MCL/ QCL	Method	Analysis Date / By
VOLATILE ORGANIC COMPOUNDS								
2990	Benzene	ND	ug/L		0.50	5	E524.2	03/24/17 17:41 / msk
2993	Bromobenzene	ND	ug/L		0.50		E524.2	03/24/17 17:41 / msk
2430	Bromochloromethane	ND	ug/L		0.50		E524.2	03/24/17 17:41 / msk
2943	Bromodichloromethane	ND	ug/L		0.50		E524.2	03/24/17 17:41 / msk
2942	Bromoform	ND	ug/L		0.50		E524.2	03/24/17 17:41 / msk
2214	Bromomethane	ND	ug/L		0.50		E524.2	03/24/17 17:41 / msk
2422	n-Butylbenzene	ND	ug/L		0.50		E524.2	03/24/17 17:41 / msk
2428	sec-Butylbenzene	ND	ug/L		0.50		E524.2	03/24/17 17:41 / msk
2426	tert-Butylbenzene	ND	ug/L		0.50		E524.2	03/24/17 17:41 / msk
2982	Carbon tetrachloride	ND	ug/L		0.50	5	E524.2	03/24/17 17:41 / msk
2989	Chlorobenzene	ND	ug/L		0.50	100	E524.2	03/24/17 17:41 / msk
2944	Chlorodibromomethane	ND	ug/L		0.50		E524.2	03/24/17 17:41 / msk
2216	Chloroethane	ND	ug/L		0.50		E524.2	03/24/17 17:41 / msk
2941	Chloroform	ND	ug/L		0.50		E524.2	03/24/17 17:41 / msk
2210	Chloromethane	ND	ug/L		0.50		E524.2	03/24/17 17:41 / msk
2965	2-Chlorotoluene	ND	ug/L		0.50		E524.2	03/24/17 17:41 / msk
2966	4-Chlorotoluene	ND	ug/L		0.50		E524.2	03/24/17 17:41 / msk
2931	1,2-Dibromo-3-chloropropane	ND	ug/L		1.0	0.2	E524.2	03/24/17 17:41 / msk
2408	Dibromomethane	ND	ug/L		0.50		E524.2	03/24/17 17:41 / msk
2968	1,2-Dichlorobenzene	ND	ug/L		0.50	600	E524.2	03/24/17 17:41 / msk
2967	1,3-Dichlorobenzene	ND	ug/L		0.50		E524.2	03/24/17 17:41 / msk
2969	1,4-Dichlorobenzene	ND	ug/L		0.50	75	E524.2	03/24/17 17:41 / msk
2212	Dichlorodifluoromethane	ND	ug/L		0.50		E524.2	03/24/17 17:41 / msk
2978	1,1-Dichloroethane	ND	ug/L		0.50		E524.2	03/24/17 17:41 / msk
2980	1,2-Dichloroethane	ND	ug/L		0.50	5	E524.2	03/24/17 17:41 / msk
2946	1,2-Dibromoethane	ND	ug/L		0.50	0.05	E524.2	03/24/17 17:41 / msk
2977	1,1-Dichloroethene	ND	ug/L		0.50	7	E524.2	03/24/17 17:41 / msk
2380	cis-1,2-Dichloroethene	ND	ug/L		0.50	70	E524.2	03/24/17 17:41 / msk
2979	trans-1,2-Dichloroethene	ND	ug/L		0.50	100	E524.2	03/24/17 17:41 / msk
2983	1,2-Dichloropropane	ND	ug/L		0.50	5	E524.2	03/24/17 17:41 / msk
2412	1,3-Dichloropropane	ND	ug/L		0.50		E524.2	03/24/17 17:41 / msk
2416	2,2-Dichloropropane	ND	ug/L		0.50		E524.2	03/24/17 17:41 / msk
2410	1,1-Dichloropropene	ND	ug/L		0.50		E524.2	03/24/17 17:41 / msk
2413	cis-1,3-Dichloropropene	ND	ug/L		0.50		E524.2	03/24/17 17:41 / msk
2224	trans-1,3-Dichloropropene	ND	ug/L		0.50		E524.2	03/24/17 17:41 / msk
2992	Ethylbenzene	ND	ug/L		0.50	700	E524.2	03/24/17 17:41 / msk

Report Definitions:
RL - Analyte reporting limit.
QCL - Quality control limit.
MCL - Maximum contaminant level.
ND - Not detected at the reporting limit.

LABORATORY ANALYTICAL REPORT

Prepared by Billings, MT Branch

Client: Power-Teton County Water and Sewer Dist
Client Sample ID: Trip Blank Lot020517 B-MSK SHP0269
PWS #: MT0000311 **Name:** POWER TETON COUNTY WATER DIST
Facility ID:
SamplingPoint/Location: Trip Blank Lot020517
Project ID: MT0000311
Collector's Name: Not Provided **Contact Phone #:**
Compliance Sample: YES **Sample Type:** RT

Lab ID: B17031740-002
Report Date: 03/31/17
Collection Date: 03/22/17 08:00
Date Received: 03/23/17
Matrix: Trip Blank
Federal ID#: MT00005

FRDS Analyses	Result	Units	Qual	RL	MCL/ QCL	Method	Analysis Date / By
VOLATILE ORGANIC COMPOUNDS							
2246 Hexachlorobutadiene	ND	ug/L		0.50		E524.2	03/24/17 17:41 / msk
2994 Isopropylbenzene	ND	ug/L		0.50		E524.2	03/24/17 17:41 / msk
2030 p-Isopropyltoluene	ND	ug/L		0.50		E524.2	03/24/17 17:41 / msk
2251 Methyl tert-butyl ether (MTBE)	ND	ug/L		0.50		E524.2	03/24/17 17:41 / msk
2964 Methylene chloride	ND	ug/L		0.50	5	E524.2	03/24/17 17:41 / msk
2248 Naphthalene	ND	ug/L		0.50		E524.2	03/24/17 17:41 / msk
2998 n-Propylbenzene	ND	ug/L		0.50		E524.2	03/24/17 17:41 / msk
2996 Styrene	ND	ug/L		0.50	100	E524.2	03/24/17 17:41 / msk
2986 1,1,1,2-Tetrachloroethane	ND	ug/L		0.50		E524.2	03/24/17 17:41 / msk
2988 1,1,2,2-Tetrachloroethane	ND	ug/L		0.50		E524.2	03/24/17 17:41 / msk
2987 Tetrachloroethene	ND	ug/L		0.50	5	E524.2	03/24/17 17:41 / msk
2991 Toluene	ND	ug/L		0.50	1000	E524.2	03/24/17 17:41 / msk
2420 1,2,3-Trichlorobenzene	ND	ug/L		0.50		E524.2	03/24/17 17:41 / msk
2378 1,2,4-Trichlorobenzene	ND	ug/L		0.50	70	E524.2	03/24/17 17:41 / msk
2981 1,1,1-Trichloroethane	ND	ug/L		0.50	200	E524.2	03/24/17 17:41 / msk
2985 1,1,2-Trichloroethane	ND	ug/L		0.50	5	E524.2	03/24/17 17:41 / msk
2984 Trichloroethene	ND	ug/L		0.50	5	E524.2	03/24/17 17:41 / msk
2218 Trichlorofluoromethane	ND	ug/L		0.50		E524.2	03/24/17 17:41 / msk
2414 1,2,3-Trichloropropane	ND	ug/L		0.50		E524.2	03/24/17 17:41 / msk
2950 Trihalomethanes, Total	ND	ug/L		0.50	80	E524.2	03/24/17 17:41 / msk
2418 1,2,4-Trimethylbenzene	ND	ug/L		0.50		E524.2	03/24/17 17:41 / msk
2424 1,3,5-Trimethylbenzene	ND	ug/L		0.50		E524.2	03/24/17 17:41 / msk
2976 Vinyl chloride	ND	ug/L		0.50	2	E524.2	03/24/17 17:41 / msk
2963 m+p-Xylenes	ND	ug/L		0.50		E524.2	03/24/17 17:41 / msk
2997 o-Xylene	ND	ug/L		0.50		E524.2	03/24/17 17:41 / msk
2955 Xylenes, Total	ND	ug/L		0.50	10000	E524.2	03/24/17 17:41 / msk
Surr: p-Bromofluorobenzene	102	%REC			70-130	E524.2	03/24/17 17:41 / msk
Surr: 1,2-Dichloroethane-d4	110	%REC			70-130	E524.2	03/24/17 17:41 / msk
Surr: Toluene-d8	80.0	%REC			70-130	E524.2	03/24/17 17:41 / msk

Report Definitions:
RL - Analyte reporting limit.
QCL - Quality control limit.
MCL - Maximum contaminant level.
ND - Not detected at the reporting limit.

7 HN HAA5 8-17

ENERGY LABORATORIES
Trust our People. Trust our Data.
www.energylab.com

Billings, MT 800.735.4489 • Casper, WY 888.235.0515
Gillette, WY 866.686.7175 • Helena, MT 877.472.0711

ANALYTICAL SUMMARY REPORT

August 17, 2017

Power-Teton County Water and Sewer Dist
PO Box 176
Power, MT 59468

Work Order: B17080618

Project Name: MT0000311

Energy Laboratories Inc Billings MT received the following 2 samples for Power-Teton County Water and Sewer Dist on 8/8/2017 for analysis.

Lab ID	Client Sample ID	Collect Date	Receive Date	Matrix	Test
B17080618-001	DBP1 306 Central Ave	08/07/17 8:15	08/08/17	Drinking Water	Haloacetic Acid Liquid-Liquid Ext. (VOA) 552-Haloacetic Acids-(HAAs) 524-Purgeable Organics, Trihalomethanes
B17080618-002	Trip Blank Lot071417 B-LAW SHP0271	08/07/17 8:15	08/08/17	Trip Blank	524-Purgeable Organics, Trihalomethanes

The analyses presented in this report were performed by Energy Laboratories, Inc., 1120 S 27th St., Billings, MT 59101, unless otherwise noted. Any exceptions or problems with the analyses are noted in the Laboratory Analytical Report, the QA/QC Summary Report, or the Case Narrative.

The results as reported relate only to the item(s) submitted for testing.

If you have any questions regarding these test results, please call.

Report Approved By: Organics Co-Supervisor

Digitally signed by
Leigh Ann. Wise
Date: 2017.08.17 12:49:53 -06:00

LABORATORY ANALYTICAL REPORT

Prepared by Billings, MT Branch

Client: Power-Teton County Water and Sewer Dist
Client Sample ID: DBP1 306 Central Ave
PWS #: MT0000311 **Name:** POWER TETON COUNTY WATER DIST
Facility ID: DS001
SamplingPoint/Location: DBP1 / DBP1 306 Central Ave
Project ID: MT0000311
Collector's Name: Karol Walker **Contact Phone #:**
Compliance Sample: YES **Sample Type:** RT

Lab ID: B17080618-001
Report Date: 08/17/17
Collection Date: 08/07/17 08:15
Date Received: 08/08/17
Matrix: Drinking Water
Federal ID#: MT00005

FRDS	Analyses	Result	Units	Qual	RL	MCL/ QCL	Method	Analysis Date / By
	TRIHALOMETHANES							
2943	Bromodichloromethane	6.1	ug/L		0.50		E524.2	08/11/17 23:46 / msc
2942	Bromoform	ND	ug/L		0.50		E524.2	08/11/17 23:46 / msc
2944	Chlorodibromomethane	0.89	ug/L		0.50		E524.2	08/11/17 23:46 / msc
2941	Chloroform	20	ug/L		0.50		E524.2	08/11/17 23:46 / msc
2950	Trihalomethanes, Total	27	ug/L		0.50	80	E524.2	08/11/17 23:46 / msc
	Surr: 1,2-Dichloroethane-d4	101	%REC			70-130	E524.2	08/11/17 23:46 / msc
	Surr: p-Bromofluorobenzene	109	%REC			70-130	E524.2	08/11/17 23:46 / msc
	Surr: Toluene-d8	95.0	%REC			70-130	E524.2	08/11/17 23:46 / msc
	HALOACETIC ACIDS							
2454	Dibromoacetic acid	ND	ug/L		0.25		E552.2	08/10/17 20:34 / jem
2451	Dichloroacetic acid	11	ug/L		0.75		E552.2	08/10/17 20:34 / jem
2453	Monobromoacetic acid	ND	ug/L		0.50		E552.2	08/10/17 20:34 / jem
2450	Monochloroacetic acid	ND	ug/L	D	1.5		E552.2	08/10/17 20:34 / jem
2452	Trichloroacetic acid	5.9	ug/L		0.50		E552.2	08/10/17 20:34 / jem
2456	Total Regulated Haloacetic Acids	17	ug/L		0.50	60	E552.2	08/10/17 20:34 / jem
2455	Bromochloroacetic acid	2.0	ug/L		0.50		E552.2	08/10/17 20:34 / jem
	Surr: 2,3-Dibromopropionic acid	81.0	%REC			70-130	E552.2	08/10/17 20:34 / jem

Report Definitions:
RL - Analyte reporting limit.
QCL - Quality control limit.
D - RL increased due to sample matrix.
MCL - Maximum contaminant level.
ND - Not detected at the reporting limit.

LABORATORY ANALYTICAL REPORT

Prepared by Billings, MT Branch

Client: Power-Teton County Water and Sewer Dist
Client Sample ID: Trip Blank Lot071417 B-LAW SHP0271
PWS #: MT0000311 **Name:** POWER TETON COUNTY WATER DIST
Facility ID:
SamplingPoint/Location: Trip Blank Lot071417
Project ID: MT0000311
Collector's Name: Not Provided **Contact Phone #:**
Compliance Sample: YES **Sample Type:** RT

Lab ID: B17080618-002
Report Date: 08/17/17
Collection Date: 08/07/17 08:15
Date Received: 08/08/17
Matrix: Trip Blank
Federal ID#: MT00005

FRDS Analyses	Result	Units	Qual	RL	MCL/ QCL	Method	Analysis Date / By
TRIHALOMETHANES							
2943 Bromodichloromethane	ND	ug/L		0.50		E524.2	08/11/17 18:56 / msc
2942 Bromoform	ND	ug/L		0.50		E524.2	08/11/17 18:56 / msc
2944 Chlorodibromomethane	ND	ug/L		0.50		E524.2	08/11/17 18:56 / msc
2941 Chloroform	ND	ug/L		0.50		E524.2	08/11/17 18:56 / msc
2950 Trihalomethanes, Total	ND	ug/L		0.50	80	E524.2	08/11/17 18:56 / msc
Surr: 1,2-Dichloroethane-d4	103	%REC			70-130	E524.2	08/11/17 18:56 / msc
Surr: p-Bromofluorobenzene	110	%REC			70-130	E524.2	08/11/17 18:56 / msc
Surr: Toluene-d8	95.0	%REC			70-130	E524.2	08/11/17 18:56 / msc

Report Definitions:
RL - Analyte reporting limit.
QCL - Quality control limit.
MCL - Maximum contaminant level.
ND - Not detected at the reporting limit.

LT2ESWTR Source Water Monitoring for Systems Serving Less Than 10,000 People Factsheet

WHAT IS THE LT2ESWTR?

The U.S. Environmental Protection Agency (EPA) published the Long Term 2 Enhanced Surface Water Treatment Rule (LT2ESWTR) on January 5, 2006. The LT2ESWTR improves control of microbial pathogens. The LT2ESWTR requires source water monitoring at public water systems (PWSs) that use surface water or ground water under the direct influence of surface water (GWUDI) (i.e., Subpart H PWSs). Based on system size and filtration type, systems need to monitor for *Cryptosporidium*, *E. coli*, and turbidity. This factsheet is for systems that serve less than 10,000 people. **Note, if you sell water to a system that serves greater than 10,000 people or are part of a combined distribution system and one of the consecutive systems has a population greater than 10,000 people, please refer to the** *LT2ESWTR Source Water Monitoring for Systems Serving At Least 10,000 People Factsheet* **(EPA 816-F-06-017)**.

WHAT IS THE PURPOSE OF SOURCE WATER MONITORING?

Source water monitoring data will be used to categorize the source water *Cryptosporidium* concentration in to one of four "bin" classifications that have associated treatment requirements. The LT2ESWTR provides other options for systems to comply with the **initial** source water monitoring requirements:

- Submit data from *Cryptosporidium* samples collected before the system must begin source water monitoring and the data must meets certain requirements.
- Filtered systems may skip source water monitoring and commit to provide a total of at least 5.5 log of treatment for *Cryptosporidium*, equivalent to meeting the treatment requirement of Bin 4. Unfiltered systems skip source water monitoring and commit to provide a total of at least 3-log *Cryptosporidium* inactivation, which is equal to meeting the treatment requirements for unfiltered systems with a mean *Cryptosporidium* concentration of greater than 0.01 oocysts/L. Systems that decide to skip monitoring and provide maximum treatment must notify the state in writing.

A **second round** of source water monitoring will follow 6 years after the system makes its initial bin determination. Grandfathering is not available for the second round of source water monitoring.

WHAT ARE THE INITIAL SOURCE WATER MONITORING REQUIREMENTS?

The source water monitoring requirements of LT2ESWTR apply to all Subpart H PWSs. You are subject to initial source water monitoring requirements if you do not have prior monitoring data that meets grandfathering requirements. For more information on source water monitoring requirements see EPA's *Source Water Monitoring Guidance Manual for Public Water Systems for the Final Long Term 2 Enhanced Surface Water Treatment Rule* (EPA 815-R06-005 February 2006), available at www.epa.gov/safewater/disinfection/lt2/compliance.html.

> Two options systems serving less than 10,000 people have to comply with the source water monitoring requirements are:
> - Conduct *E. coli* monitoring first and based on those results, the system may or may not need to conduct *Cryptosporidium* monitoring, or
> - Systems may go directly to *Cryptosporidium* monitoring.

Prior to beginning initial source water monitoring, you must submit a sampling schedule that specifies the calendar dates when you will collect the required source water samples. The samples must be evenly spaced throughout the monitoring period (e.g., monthly on the 15th of each month). However, the schedule may be altered to take into account holidays, weekends, or other events. All the samples must be taken within a 5-day window (i.e., you can take the sample up to 2 days before or 2 days after the date indicated in the schedule). In addition, you

must submit a description of the intended sampling location in relation to the source and any treatment processes, as well as a description of any points of chemical addition, and filter backwash recycle.

FILTERED SYSTEMS SERVING LESS THAN 10,000 PEOPLE – You should collect *E. coli* samples at least once every 2 weeks for 12 months. You will then be required to monitor for *Cryptosporidium* at least twice per month for 12 months, or at least once per month for 24 months, if either of the following conditions are met:

- For systems using lakes or reservoirs, if the mean annual *E. coli* concentration is greater than 10 *E. coli*/100 mL. This also applies to GWUDI systems if the nearest surface water body is a lake or reservoir.
- For systems using flowing stream sources, if the mean annual *E. coli* concentration is greater than 50 *E. coli*/100 mL. This also applies to GWUDI systems if the nearest surface water body is a flowing stream, or if there is no nearby surface water.

A system may choose to notify EPA or the state it will not collect the *E. coli* samples, but you will collect *Cryptosporidium* samples at least twice per month for 12 months, or at least once per month for 24 months.

UNFILTERED SYSTEMS SERVING LESS THAN 10,000 PEOPLE – You must sample for *Cryptosporidium* at least twice per month for 12 months, or at least once per month for 24 months.

When Must I Comply With The Monitoring Requirements?

The system compliance schedule is based on the population served by your system. **A PWS must conduct monitoring based on the requirements of the largest system in the combined distribution system.** The interconnected wholesale/consecutive systems relationships have been determined by the state.

Systems that serve...	< 10,000 and monitor for *E. coli* [1]	< 10,000 and monitor for *Cryptosporidium* [2]
Submit: Sample Schedule and Sample Location Description	July 1, 2008	January 1, 2010
Must begin the first round of source water monitoring by...	October 2008	April 2010
Submit Grandfathered Data (if applicable)	December 1, 2008	June 1, 2010
Submit Bin Classification (Filtered) or Mean *Cryptosporidium* Level (Unfiltered)		September 2012
Comply with additional LT2ESWTR treatment technique requirements[3]		October 1, 2014
Must begin the second round of source water monitoring by...	October 1, 2017	April 1, 2019

[1] Applies only to filtered systems.
[2] Applies to filtered systems that exceed the *E. coli* trigger or do not monitor for *E. coli* and to unfiltered systems.
[3] State may allow up to an additional 2 years for capital improvements to comply with the treatment technique.

What Is A Bin Classification?

FILTERED SYSTEMS SERVING LESS THAN 10,000 PEOPLE – You will be classified into a "bin" based on the results of your source water monitoring. Your bin classification determines whether further treatment for *Cryptosporidium* is required. A second round of source water monitoring is required 6 years after your initial bin classification and may affect your bin classification.

For systems that are:	Mean *Cryptosporidium* Concentration[1]	Bin Classification
...required to monitor for *Cryptosporidium*	< 0.075 oocysts/L	Bin 1
	from 0.075 to < 1.0 oocysts/L	Bin 2
	from 1.0 to < 3.0 oocysts/L	Bin 3
	≥ 3.0 oocysts/L	Bin 4
... not required to monitor for *Cryptosporidium* [2]	N/A	Bin 1

[1] Samples must be analyzed by an approved laboratory and use EPA method 1622 or 1623.
[2] Only for systems that do not exceed the *E. coli* trigger level.

ADDITIONAL TREATMENT REQUIREMENTS FOR FILTERED SYSTEMS – Additional treatment may be required based on your bin classification. Refer to the table below for the additional *Cryptosporidium* treatment requirements.

Bin Classification	If the system uses the following filtration treatment in full compliance with existing requirements, then the additional *Cryptosporidium* treatment requirements are...			
	Conventional filtration treatment (including softening)	Direct filtration	Slow sand or diatomaceous earth filtration	Alternative filtration technologies
Bin 1	No additional treatment	No additional treatment	No additional treatment	No additional treatment
Bin 2	1-log treatment	1.5-log treatment	1-log treatment	(1)
Bin 3	2-log treatment	2.5-log treatment	2-log treatment	(2)
Bin 4	2.5-log treatment	3-log treatment	2.5-log treatment	(3)

(1) As determined by the state such that the total *Cryptosporidium* removal and inactivation is at least 4.0-log.
(2) As determined by the state such that the total *Cryptosporidium* removal and inactivation is at least 5.0-log.
(3) As determined by the state such that the total *Cryptosporidium* removal and inactivation is at least 5.5-log.

For information on the toolbox options that can be used to achieve additional log removal requirements, see the *Long Term 2 Enhanced Surface Water Treatment Rule Toolbox Guidance Manual* (draft version anticipated late 2006).

UNFILTERED SYSTEMS SERVING LESS THAN 10,000 PEOPLE – You must calculate an arithmetic mean of all *Cryptosporidium* samples concentrations required. Following completion of the second round of source water monitoring, you must provide a level of inactivation for *Cryptosporidium* based on the arithmetic mean of your *Cryptosporidium* sample concentrations.

For systems that are:	Mean *Cryptosporidium* Concentration[1]	*Cryptosporidium* inactivation
Unfiltered	≤ 0.01 oocysts/L	2-log
	> 0.01 oocysts/L	3-log

[1] Samples must be analyzed by an approved laboratory and use EPA method 1622 or 1623.

ARE YOU CONSIDERING MAKING A CHANGE TO YOUR DISINFECTION PRACTICES?

After completing the initial round of source water monitoring, systems that plan to make a significant change to their disinfection practice must notify the state, develop disinfection profiles, and calculate disinfection benchmarks for *Giardia lamblia* and viruses. To develop a profile and benchmark, PWSs must monitor at least weekly for a period of 12 consecutive months to determine the total log inactivation for *Giardia lamblia* and viruses. The disinfection benchmark is an indicator of disinfection effectiveness based on the inactivation of *Giardia lamblia* or viruses. The benchmark is determined by calculating the average daily inactivation value for each of 12 consecutive months. The lowest monthly average becomes the disinfection benchmark. If the PWS has data from more than 1 year, the benchmark is the average of the lowest monthly average value for each of the years. The Long Term 1 Enhanced Surface Water Treatment Rule (LT1ESWTR) Disinfection Profiling and Benchmarking Technical Guidance Manual (EPA 816-R-03-004, May 2003), provides guidance for developing a disinfection profile and benchmark. EPA has developed two tools for systems to determine their disinfection profile and calculate the benchmark at the following website: www.epa.gov/safewater/mdbp/lt1eswtr.html.

ADDITIONAL GUIDANCE MATERIALS

The following guidance document addresses the source water monitoring requirements for the LT2ESWTR:

- *Source Water Monitoring Guidance Manual for Public Water Systems for the Final Long Term 2 Enhanced Surface Water Treatment Rule* (EPA 815-R06-005 February 2006) – Provides surface water systems, laboratories, states, and Tribes with a review of the source water monitoring provisions. The source water monitoring guidance manual provides direction to the systems on how, where and when to monitor, how to report the data, how to submit "grandfathered" data (e.g., previously collected data), and how the data can be evaluated and used to determine risk bin classification.

For additional guidance on implementing the LT2ESWTR, you may refer to the following existing and future EPA materials:

- LT2ESWTR Quick Reference Guides (Schedule 4)
- On-line Microscopy Training Module
- On-line Sample Collection Module
- *Microbial Laboratory Guidance Manual for the Final Long Term 2 Enhanced Surface Water Treatment Rule* (EPA 815-R06-006 February 2006)
- *Membrane Filtration Guidance Manual* (EPA 815-R-06-009 November 2005)
- Membrane Filtration Guidance Manual: Overview and Summary Factsheet (www.epa.gov/safewater/disinfection/lt2/pdfs/guide_lt2_membranefiltration_fs_final.pdf)
- *Ultraviolet Disinfection Guidance Manual and Workbook* (final version anticipated mid-2006)
- *Simultaneous Compliance Guidance Manual for Stage 2 Rules* (draft version anticipated mid-2006)
- *Small Entity Compliance Guidance* (draft version anticipated mid-2006)
- *Long Term 2 Enhanced Surface Water Treatment Rule Toolbox Guidance Manual* (draft version anticipated late 2006)

For additional information, please contact the Safe Drinking Water Hotline at 1-800-426-4791, send an email to stage2mdbp@epa.gov, or visit www.epa.gov/safewater/disinfection/lt2.

EPA United States Environmental Protection Agency

Stage 2 Disinfectants and Disinfection Byproducts Rule: A Quick Reference Guide For Schedule 1 Systems

Overview of the Rule

Title	Stage 2 Disinfectants and Disinfection Byproducts Rule (Stage 2 DBPR) 71 FR 388, January 4, 2006, Vol. 71, No. 2
Purpose	To increase public health protection by reducing the potential risk of adverse health effects associated with disinfection byproducts (DBPs) throughout the distribution system. Builds on the Stage 1 Disinfectants and Disinfection Byproducts Rule (Stage 1 DBPR) by focusing on monitoring for and reducing concentrations of two classes of DBPs - TTHM and HAA5 - in drinking water.
General Description	Stage 2 DBPR requires some systems to complete an Initial Distribution System Evaluation (IDSE) to characterize DBP levels in their distribution systems and identify locations to monitor DBPs for Stage 2 DBPR compliance. The Stage 2 DBPR bases TTHM and HAA5 compliance on a locational running annual average (LRAA) calculated at each monitoring location.
Utilities Covered *	▸ All community water systems (CWSs) and nontransient noncommunity water systems (NTNCWSs) that either add a primary or residual disinfectant other than ultraviolet light, or deliver water that has been treated with a primary or residual disinfectant other than ultraviolet light. ▸ Schedule 1 includes CWSs and NTNCWSs serving 100,000 or more people OR CWSs and NTNCWSs that are part of a combined distribution system in which the largest system serves 100,000 or more people.

* NTNCWSs serving < 10,000 people do not need to complete any of the IDSE options, but must conduct Stage 2 DBPR compliance monitoring.

Stage 2 DBPR Regulated Contaminants

Regulated Contaminants		MCLG (mg/L)	MCL (mg/L)
Total Trihalomethanes (TTHM)			**0.080 LRAA**
	Chloroform	0.07	
	Bromodichloromethane	zero	
	Dibromochloromethane	0.06	
	Bromoform	zero	
Five Haloacetic Acids (HAA5)			**0.060 LRAA**
	Monochloroacetic acid	0.07	
	Dichloroacetic acid	zero	
	Trichloroacetic acid	0.02	
	Bromoacetic acid	-	
	Dibromoacetic acid	-	

IDSE Requirements**

IDSE Option	Description
Standard Monitoring	Standard monitoring is one year of increased monitoring for TTHM and HAA5 in addition to the data being collected under Stage 1 DBPR. These data will be used with Stage 1 DBPR data to select Stage 2 DBPR TTHM and HAA5 compliance monitoring locations. Any system may conduct standard monitoring to meet the IDSE requirements of the Stage 2 DBPR.
System Specific Study (SSS)	Systems that have extensive TTHM and HAA5 data (including Stage 1 DBPR compliance data) or technical expertise to prepare a hydraulic model may choose to conduct a system specific study to select Stage 2 DBPR compliance monitoring locations.
40/30 Certification †	The term "40/30" refers to a system that during a specific time period has all individual Stage 1 DBPR compliance samples less than or equal to 0.040 mg/L for TTHM and 0.030 mg/L for HAA5 and has no monitoring violations during the same time period. These systems have no IDSE monitoring requirements, but will still need to conduct Stage 2 DBPR compliance monitoring.
Very Small System (VSS) Waiver †	Systems that serve fewer than 500 people and have eligible TTHM and HAA5 data can qualify for a VSS Waiver and would not be required to conduct IDSE monitoring. These systems have no IDSE monitoring requirements, but will still need to conduct Stage 2 DBPR compliance monitoring.
EPA has developed several tools to assist systems with complying with the Stage 2 DBPR IDSE requirements. These materials can be downloaded at www.epa.gov/safewater/disinfection/stage2.	

** NTNCWSs serving < 10,000 people do not need to complete any of the IDSE options.
† Systems that are notified by EPA or the state their VSS waiver or 40/30 certification has not been approved will need to complete Standard Monitoring or System Specific Study.

For additional information on the Stage 2 DBPR

Call the Safe Drinking Water Hotline at 1-800-426-4791; visit the EPA web site at www.epa.gov/safewater/disinfection/stage2; or contact your state drinking water representative.

Compliance with Stage 2 DBPR MCLs (Routine Monitoring)

Source Water Type	Population Size Category	Monitoring Frequency [1]	Total Distribution System Monitoring Locations Per Monitoring Period[2]
Subpart H	<500	per year	2
	500-3,300	per quarter	2
	3,301-9,999	per quarter	2
	10,000-49,999		4
	50,000-249,999		8
	250,000-999,999		12
	1,000,000-4,999,999		16
	≥5,000,000		20
Ground Water	<500	per year	2
	500-9,999		2
	10,000-99,999	per quarter	4
	100,000-499,999		6
	≥500,000		8

Operational Evaluation

Systems must begin complying with the operational evaluation provision of the Stage 2 DBPR.

[1] All systems must monitor during month of highest DBP concentrations.

[2] Systems on quarterly monitoring must take dual sample sets every 90 days at each monitoring location, except for subpart H systems serving 500-3,300. Systems on annual monitoring and subpart H systems serving 500-3,300 are required to take individual TTHM and HAA5 samples (instead of a dual sample set) at the locations with the highest TTHM and HAA5 concentrations, respectively. If monitoring annually, only one location with a dual sample set per monitoring period is needed if highest TTHM and HAA5 concentrations occur at the same location, and month.

Critical Deadlines and Requirements

For Drinking Water Systems (Schedule 1)

January 4, 2006	Systems serving fewer than 500 people that have TTHM and HAA5 compliance data qualify for a VSS Waiver from conducting an IDSE, unless informed otherwise by U.S. EPA or state primacy agency.
October 1, 2006	Systems that do not receive a VSS Waiver must submit to the U.S EPA or state primacy agency either a: ▸ Standard monitoring plan, ▸ System specific study plan, or ▸ 40/30 certification.
October 1, 2007	Systems conducting standard monitoring or SSS begin collecting samples in accordance with their approved plan.
September 30, 2008	No later than this date, systems conducting standard monitoring or a SSS complete their monitoring or study.
January 1, 2009	No later than this date, systems conducting standard monitoring or a SSS must submit their IDSE report.
April 1, 2009	Consecutive systems must begin monitoring for chlorine or chloramines as specified under the Stage 1 DBPR.
April 1, 2012	No later than this date, systems must: ▸ Complete their Stage 2 DBPR Compliance Monitoring Plan (Systems serving more than 3,300 people must submit their Monitoring Plan to the state.)* ▸ Begin complying with monitoring requirements of the Stage 2 DBPR.†
January 2013	Systems must begin complying with rule requirements to determine compliance with the operational evaluation levels for TTHMs and HAA5s.

For States

January - June 2006	States are encouraged to inform systems serving fewer than 500 people and do not qualify for a VSS Waiver from the IDSE requirements should begin complying with standard monitoring requirements.
September 30, 2007	States must approve the system's standard monitoring plan, 40/30 certification, or system specific study plan or notify the system that the state has not completed its review.
October 4, 2007	States are encouraged to submit final primacy applications or extension requests to EPA.
January 4, 2008	Final primacy applications must be submitted to EPA, unless granted an extension.
March 31, 2009	States must approve the system's IDSE report or notify the system that the state has not completed its review of the IDSE report.
January 4, 2010	Final primacy revision applications from states with approved 2-year extensions agreements must be submitted to EPA.

* A monitoring plan is not required if the IDSE report includes all information required in the monitoring plan.
† States may allow up to an additional 24 months for compliance with MCLs for systems requiring capital improvements.

APPENDIX 2 - G

WaterCAD Results

FlexTable: Reservoir Table

Current Time: 0.000 hours

ID	Label	Elevation (ft)	Zone	Flow (Out net) (gpm)	Hydraulic Grade (ft)
129	Muddy Creek	3,637.00	<None>	-8,423	3,637.00

FlexTable: Pump Table

Current Time: 0.000 hours

ID	Label	Elevation (ft)	Pump Definition	Status (Initial)	Hydraulic Grade (Suction) (ft)
154	Finished Water Pump	3,645.00	Power Finished Water-Grundfos Model CR10-7	On	3,681.50

Hydraulic Grade (Discharge) (ft)	Flow (Total) (gpm)	Pump Head (ft)
3,803.55	82	122.05

FlexTable: Tank Table

Current Time: 0.000 hours

ID	Label	Zone	Elevation (Base) (ft)	Elevation (Minimum) (ft)	Elevation (Initial) (ft)
128	T-1	<None>	3,783.50	3,784.50	3,798.50
172	Clear Well	<None>	3,645.60	3,650.60	3,681.60

Elevation (Maximum) (ft)	Volume (Inactive) (MG)	Diameter (ft)	Flow (Out net) (gpm)	Hydraulic Grade (ft)
3,813.50	0.00	30.00	-82	3,798.50
3,681.60	0.00	10.00	8,504	3,681.60

FlexTable: Pipe Table

Current Time: 0.000 hours

Label	Length (Scaled) (ft)	Start Node	Stop Node	Diameter (in)	Material	Hazen-Williams C	Minor Loss Coefficient (Local)	Length (User Defined) (ft)
1st st -01	162	J-26	J-27	6.0	PVC	150.0	0.000	0
1st st-02	211	J-28	J-26	6.0	PVC	150.0	0.000	0
3rd St	716	J-41	J-7	6.0	PVC	150.0	0.000	0
4th S-06	50	J-2	J-11	10.0	Ductile Iron	130.0	0.000	0
4th St-01	35	J-36	J-8	8.0	PVC	150.0	0.000	0
4th St-02	321	J-8	J-37	8.0	PVC	150.0	0.000	0
4th St-03	41	J-37	J-19	8.0	PVC	150.0	0.000	0
4th St-04	341	J-19	J-1	8.0	PVC	150.0	0.000	0
4th St-05	355	J-1	J-2	10.0	Ductile Iron	130.0	0.000	0
4th St-07	662	J-11	J-3	10.0	PVC	150.0	0.000	0
6th St-01	342	J-32	J-35	6.0	PVC	150.0	0.000	0
6th St-02	354	J-34	J-32	6.0	PVC	150.0	0.000	0
7th Rd NE	374	J-40	J-29	6.0	PVC	150.0	0.000	0
7th ST-01	328	J-30	J-31	6.0	PVC	150.0	0.000	0
Bulk Water Line	123	J-25	J-26	6.0	PVC	150.0	0.000	0
Cascade Ave	370	J-2	J-41	6.0	PVC	150.0	0.000	0
Central Ave--02	339	J-32	J-21	6.0	PVC	150.0	0.000	0
Central Ave-01	27	J-21	J-30	6.0	PVC	150.0	0.000	0
Central Ave-03	346	J-32	J-15	6.0	PVC	150.0	0.000	0
Central Ave-04	379	J-15	J-37	6.0	PVC	150.0	0.000	0
Central Ave-05	747	J-37	J-10	6.0	PVC	150.0	0.000	0
Central Ave-06	336	J-10	J-28	6.0	PVC	150.0	0.000	0
Central Ave-07	224	J-28	J-29	6.0	PVC	150.0	0.000	0
H-01	24	H-01	J-21	6.0	PVC	150.0	0.000	0
H-02	24	H-02	J-15	6.0	PVC	150.0	0.000	0
H-03	27	H-03	J-10	6.0	PVC	150.0	0.000	0
H-04	25	H-04	J-18	6.0	PVC	150.0	0.000	0
H-05	25	H-05	J-20	6.0	PVC	150.0	0.000	0
H-06	25	H-06	J-17	6.0	PVC	150.0	0.000	0
H-07	79	H-07	J-22	6.0	PVC	150.0	0.000	0

FlexTable: Pipe Table

Current Time: 0.000 hours

Label	Length (Scaled) (ft)	Start Node	Stop Node	Diameter (in)	Material	Hazen-Williams C	Minor Loss Coefficient (Local)	Length (User Defined) (ft)
H-08	25	H-08	J-9	6.0	PVC	150.0	0.000	0
H-09	42	H-09	J-13	6.0	PVC	150.0	0.000	0
H-10	25	H-10	J-8	6.0	PVC	150.0	0.000	0
H-11	25	H-11	J-19	6.0	PVC	150.0	0.000	0
H-12	25	H-12	J-11	6.0	PVC	150.0	0.000	0
H-13	25	H-13	J-14	6.0	PVC	150.0	0.000	0
H-13	25	H-13	J-16	6.0	PVC	150.0	0.000	0
H-14	25	H-14	J-12	6.0	PVC	150.0	0.000	0
Hill Ave-01	723	J-34	J-1	6.0	PVC	150.0	0.000	0
Hill Ave-02	525	J-1	J-18	6.0	PVC	150.0	0.000	0
Hill Ave-03	715	J-18	J-20	6.0	PVC	150.0	0.000	0
Hill Ave-04	45	J-20	J-40	6.0	PVC	150.0	0.000	0
P-39	12	Muddy Creek	Clear Well	6.0	Ductile Iron	130.0	0.000	0
P-42	19	Finished Water Pump	Clear Well	4.0	Ductile Iron	130.0	0.000	0
P-43	6	Finished Water Pump	J-43	4.0	Ductile Iron	130.0	0.000	0
P-44	8,420	J-43	J-23	6.0	PVC	150.0	0.000	0
P-102	108	J-4	T-1	14.0	PVC	150.0	0.000	0
Pipe-101	48	J-23	J-24	6.0	PVC	150.0	0.000	0
Rainbow-01	328	J-17	J-3	6.0	PVC	150.0	0.000	0
Rainbow-02	44	J-7	J-17	6.0	PVC	150.0	0.000	0
Rainbow-03	19	J-7	J-6	6.0	PVC	150.0	0.000	0
Rainbow-4	11	J-5	J-6	6.0	PVC	150.0	0.000	0
Rainbow-05	787	J-5	J-14	6.0	PVC	150.0	0.000	0
Rainbow-06	9	J-14	J-38	6.0	PVC	150.0	0.000	0
Rainbow-07	330	J-3	J-16	14.0	PVC	150.0	0.000	0
Rainbow-08	1,091	J-16	J-12	14.0	PVC	150.0	0.000	0
Rainbow-09	3,424	J-12	J-4	14.0	PVC	150.0	0.000	0
Teton Ave -05	679	J-22	J-9	6.0	PVC	150.0	0.000	0

FlexTable: Pipe Table

Current Time: 0.000 hours

Label	Length (Scaled) (ft)	Start Node	Stop Node	Diameter (in)	Material	Hazen-Williams C	Minor Loss Coefficient (Local)	Length (User Defined) (ft)
Teton Ave -06	10	J-22	J-27	6.0	PVC	150.0	0.000	0
Teton Ave-01	392	J-35	J-31	6.0	PVC	150.0	0.000	0
Teton Ave-07	223	J-24	J-27	6.0	PVC	150.0	0.000	0
Teton-02	356	J-13	J-35	6.0	PVC	150.0	0.000	0
Teton-03	369	J-36	J-13	6.0	PVC	150.0	0.000	0
Teton-04	391	J-9	J-36	6.0	PVC	150.0	0.000	0

FlexTable: Hydrant Table

Current Time: 0.000 hours

Label	Lateral Length (ft)	Elevation (ft)	Zone	Demand (gpm)	Hydraulic Grade (ft)	Pressure (psi)
H-07	20	3,690.50	<None>	0	3,798.74	47
H-08	20	3,689.00	<None>	0	3,798.66	47
H-09	20	3,688.00	<None>	0	3,798.61	48
H-01	20	3,681.50	<None>	0	3,798.61	51
H-02	20	3,685.00	<None>	0	3,798.61	49
H-03	20	3,687.50	<None>	0	3,798.65	48
H-05	20	3,675.50	<None>	0	3,798.65	53
H-10	20	3,689.00	<None>	0	3,798.61	47
H-11	20	3,686.00	<None>	0	3,798.61	49
H-04	20	3,676.00	<None>	0	3,798.61	53
H-12	20	3,670.00	<None>	0	3,798.57	56
H-06	20	3,677.00	<None>	0	3,798.55	53
H-13	20	3,680.00	<None>	0	3,798.54	51
H-14	20	3,684.00	<None>	0	3,798.53	50
H-13	20	3,676.50	<None>	0	3,798.55	53

FlexTable: Junction Table

Current Time: 0.000 hours

Label	Elevation (ft)	Demand (gpm)	Hydraulic Grade (ft)	Pressure (psi)
J-1	3,678.00	1	3,798.55	52
J-2	3,672.00	1	3,798.53	55
J-3	3,678.50	1	3,798.52	52
J-4	3,772.00	0	3,798.50	11
J-5	3,676.50	1	3,798.52	53
J-6	3,676.50	1	3,798.52	53
J-7	3,676.50	1	3,798.52	53
J-8	3,689.00	0	3,798.56	47
J-9	3,689.00	0	3,798.60	47
J-10	3,687.50	0	3,798.59	48
J-11	3,670.00	0	3,798.53	56
J-12	3,684.00	0	3,798.51	50
J-13	3,688.00	0	3,798.56	48
J-14	3,676.50	0	3,798.52	53
J-15	3,685.00	0	3,798.56	49
J-16	3,680.00	0	3,798.52	51
J-17	3,677.00	0	3,798.52	53
J-18	3,676.00	1	3,798.56	53
J-19	3,686.00	0	3,798.56	49
J-20	3,675.50	0	3,798.58	53
J-21	3,681.50	0	3,798.55	51
J-22	3,690.50	0	3,798.67	47
J-23	3,688.00	1	3,798.81	48
J-24	3,690.50	1	3,798.78	47
J-25	3,688.00	1	3,798.64	48
J-26	3,688.00	1	3,798.64	48
J-27	3,690.50	1	3,798.67	47
J-28	3,686.00	1	3,798.61	49
J-29	3,685.00	1	3,798.60	49
J-30	3,681.50	1	3,798.55	51
J-31	3,687.00	1	3,798.55	48
J-32	3,684.00	1	3,798.55	50
J-34	3,677.00	1	3,798.55	53
J-35	3,685.00	1	3,798.56	49
J-36	3,690.00	1	3,798.56	47
J-37	3,687.00	1	3,798.56	48
J-38	3,676.50	1	3,798.52	53
J-40	3,675.50	1	3,798.58	53
J-41	3,671.50	1	3,798.53	55
J-43	3,645.04	0	3,803.38	69

FlexTable: Junction Table

Current Time: 0.000 hours

Label	Elevation (ft)	Demand (gpm)	Hydraulic Grade (ft)	Pressure (psi)
J-1	3,678.00	5	3,798.49	52
J-2	3,672.00	5	3,798.49	55
J-3	3,678.50	5	3,798.49	52
J-4	3,772.00	0	3,798.50	11
J-5	3,676.50	5	3,798.49	53
J-6	3,676.50	5	3,798.49	53
J-7	3,676.50	5	3,798.49	53
J-8	3,689.00	0	3,798.50	47
J-9	3,689.00	0	3,798.52	47
J-10	3,687.50	0	3,798.51	48
J-11	3,670.00	0	3,798.49	56
J-12	3,684.00	0	3,798.50	50
J-13	3,688.00	0	3,798.49	48
J-14	3,676.50	0	3,798.49	53
J-15	3,685.00	0	3,798.49	49
J-16	3,680.00	0	3,798.49	51
J-17	3,677.00	0	3,798.49	53
J-18	3,676.00	5	3,798.49	53
J-19	3,686.00	0	3,798.49	49
J-20	3,675.50	0	3,798.50	53
J-21	3,681.50	0	3,798.49	51
J-22	3,690.50	0	3,798.56	47
J-23	3,688.00	5	3,798.68	48
J-24	3,690.50	5	3,798.66	47
J-25	3,688.00	5	3,798.53	48
J-26	3,688.00	5	3,798.53	48
J-27	3,690.50	5	3,798.56	47
J-28	3,686.00	5	3,798.51	49
J-29	3,685.00	5	3,798.50	49
J-30	3,681.50	5	3,798.49	51
J-31	3,687.00	5	3,798.49	48
J-32	3,684.00	5	3,798.49	50
J-34	3,677.00	5	3,798.49	53
J-35	3,685.00	5	3,798.49	49
J-36	3,690.00	5	3,798.50	47
J-37	3,687.00	5	3,798.49	48
J-38	3,676.50	5	3,798.48	53
J-40	3,675.50	5	3,798.50	53
J-41	3,671.50	1	3,798.49	55
J-43	3,645.04	0	3,803.25	68

FlexTable: Junction Table

Current Time: 0.000 hours

Label	Elevation (ft)	Demand (gpm)	Hydraulic Grade (ft)	Pressure (psi)
J-1	3,678.00	2	3,798.52	52
J-2	3,672.00	2	3,798.51	55
J-3	3,678.50	2	3,798.51	52
J-4	3,772.00	0	3,798.50	11
J-5	3,676.50	2	3,798.50	53
J-6	3,676.50	2	3,798.50	53
J-7	3,676.50	2	3,798.50	53
J-8	3,689.00	0	3,798.53	47
J-9	3,689.00	0	3,798.56	47
J-10	3,687.50	0	3,798.55	48
J-11	3,670.00	0	3,798.51	56
J-12	3,684.00	0	3,798.50	50
J-13	3,688.00	0	3,798.52	48
J-14	3,676.50	0	3,798.50	53
J-15	3,685.00	0	3,798.52	49
J-16	3,680.00	0	3,798.51	51
J-17	3,677.00	0	3,798.51	53
J-18	3,676.00	2	3,798.53	53
J-19	3,686.00	0	3,798.52	49
J-20	3,675.50	0	3,798.54	53
J-21	3,681.50	0	3,798.52	51
J-22	3,690.50	0	3,798.62	47
J-23	3,688.00	2	3,798.75	48
J-24	3,690.50	2	3,798.73	47
J-25	3,688.00	2	3,798.59	48
J-26	3,688.00	2	3,798.59	48
J-27	3,690.50	2	3,798.62	47
J-28	3,686.00	2	3,798.56	49
J-29	3,685.00	2	3,798.55	49
J-30	3,681.50	2	3,798.52	51
J-31	3,687.00	2	3,798.52	48
J-32	3,684.00	2	3,798.52	50
J-34	3,677.00	2	3,798.52	53
J-35	3,685.00	2	3,798.52	49
J-36	3,690.00	2	3,798.53	47
J-37	3,687.00	2	3,798.52	48
J-38	3,676.50	2	3,798.50	53
J-40	3,675.50	2	3,798.54	53
J-41	3,671.50	2	3,798.51	55
J-43	3,645.04	0	3,803.33	68

FlexTable: Junction Table

Current Time: 0.000 hours

Label	Elevation (ft)	Demand (gpm)	Hydraulic Grade (ft)	Pressure (psi)
J-1	3,678.00	7	3,798.42	52
J-2	3,672.00	7	3,798.42	55
J-3	3,678.50	7	3,798.44	52
J-4	3,772.00	0	3,798.50	11
J-5	3,676.50	7	3,798.42	53
J-6	3,676.50	7	3,798.42	53
J-7	3,676.50	7	3,798.42	53
J-8	3,689.00	0	3,798.42	47
J-9	3,689.00	0	3,798.43	47
J-10	3,687.50	0	3,798.42	48
J-11	3,670.00	0	3,798.43	56
J-12	3,684.00	0	3,798.46	50
J-13	3,688.00	0	3,798.41	48
J-14	3,676.50	0	3,798.41	53
J-15	3,685.00	0	3,798.41	49
J-16	3,680.00	0	3,798.45	51
J-17	3,677.00	0	3,798.42	53
J-18	3,676.00	7	3,798.41	53
J-19	3,686.00	0	3,798.42	49
J-20	3,675.50	0	3,798.41	53
J-21	3,681.50	0	3,798.40	51
J-22	3,690.50	0	3,798.46	47
J-23	3,688.00	7	3,798.56	48
J-24	3,690.50	7	3,798.54	47
J-25	3,688.00	7	3,798.43	48
J-26	3,688.00	7	3,798.43	48
J-27	3,690.50	7	3,798.46	47
J-28	3,686.00	7	3,798.42	49
J-29	3,685.00	7	3,798.42	49
J-30	3,681.50	7	3,798.40	51
J-31	3,687.00	7	3,798.40	48
J-32	3,684.00	7	3,798.41	49
J-34	3,677.00	7	3,798.41	53
J-35	3,685.00	7	3,798.40	49
J-36	3,690.00	7	3,798.42	47
J-37	3,687.00	7	3,798.42	48
J-38	3,676.50	7	3,798.41	53
J-40	3,675.50	7	3,798.41	53
J-41	3,671.50	7	3,798.42	55
J-43	3,645.04	0	3,803.14	68

Fire Flow Node FlexTable: Fire Flow Report

Current Time: 0.000 hours

Label	Fire Flow (Needed) (gpm)	Fire Flow (Available) (gpm)	Pressure (Residual Lower Limit) (psi)	Pressure (Calculated Residual) (psi)	Junction w/ Minimum Pressure (System)
H-07	1,000	1,555	20	20	J-4
H-08	2,000	1,738	20	20	J-4
H-09	2,000	1,814	20	20	J-4
H-01	1,000	1,757	20	20	J-4
H-02	1,000	1,973	20	20	J-4
H-03	1,000	1,745	20	20	J-4
H-05	1,000	1,745	20	20	J-4
H-10	1,000	2,207	20	20	J-4
H-11	1,000	2,459	20	20	J-4
H-04	1,000	1,888	20	20	J-4
H-12	1,000	3,000	20	29	J-4
H-06	1,000	2,435	20	20	J-4
H-13	1,000	3,000	20	33	J-4
H-14	1,000	3,000	20	35	J-4
H-13	1,000	1,122	20	20	J-4
J-1	1,000	(N/A)	20	(N/A)	(N/A)
J-2	1,000	(N/A)	20	(N/A)	(N/A)
J-3	1,000	(N/A)	20	(N/A)	(N/A)
J-4	1,000	(N/A)	20	(N/A)	(N/A)
J-5	1,000	(N/A)	20	(N/A)	(N/A)
J-6	1,000	(N/A)	20	(N/A)	(N/A)
J-7	1,000	(N/A)	20	(N/A)	(N/A)
J-8	1,000	(N/A)	20	(N/A)	(N/A)
J-9	1,000	(N/A)	20	(N/A)	(N/A)
J-10	1,000	(N/A)	20	(N/A)	(N/A)
J-11	1,000	(N/A)	20	(N/A)	(N/A)
J-12	1,000	(N/A)	20	(N/A)	(N/A)
J-13	1,000	(N/A)	20	(N/A)	(N/A)
J-14	1,000	(N/A)	20	(N/A)	(N/A)
J-15	1,000	(N/A)	20	(N/A)	(N/A)
J-16	1,000	(N/A)	20	(N/A)	(N/A)
J-17	1,000	(N/A)	20	(N/A)	(N/A)
J-18	1,000	(N/A)	20	(N/A)	(N/A)
J-19	1,000	(N/A)	20	(N/A)	(N/A)
J-20	1,000	(N/A)	20	(N/A)	(N/A)
J-21	1,000	(N/A)	20	(N/A)	(N/A)
J-22	1,000	(N/A)	20	(N/A)	(N/A)
J-23	1,000	(N/A)	20	(N/A)	(N/A)
J-24	1,000	(N/A)	20	(N/A)	(N/A)
J-25	1,000	(N/A)	20	(N/A)	(N/A)
J-26	1,000	(N/A)	20	(N/A)	(N/A)
J-27	1,000	(N/A)	20	(N/A)	(N/A)
J-28	1,000	(N/A)	20	(N/A)	(N/A)
J-29	1,000	(N/A)	20	(N/A)	(N/A)
J-30	1,000	(N/A)	20	(N/A)	(N/A)

Fire Flow Node FlexTable: Fire Flow Report

Current Time: 0.000 hours

Label	Fire Flow (Needed) (gpm)	Fire Flow (Available) (gpm)	Pressure (Residual Lower Limit) (psi)	Pressure (Calculated Residual) (psi)	Junction w/ Minimum Pressure (System)
J-31	1,000	(N/A)	20	(N/A)	(N/A)
J-32	1,000	(N/A)	20	(N/A)	(N/A)
J-34	1,000	(N/A)	20	(N/A)	(N/A)
J-35	1,000	(N/A)	20	(N/A)	(N/A)
J-36	1,000	(N/A)	20	(N/A)	(N/A)
J-37	1,000	(N/A)	20	(N/A)	(N/A)
J-38	1,000	(N/A)	20	(N/A)	(N/A)
J-40	1,000	(N/A)	20	(N/A)	(N/A)
J-41	1,000	(N/A)	20	(N/A)	(N/A)
J-43	1,000	(N/A)	20	(N/A)	(N/A)

APPENDIX 2 - H

Financial Records

Audit
Reports

2011 - 2016

POWER TETON COUNTY WATER SEWER DISTRICT
Statements of Financial Position
December 31, 2011 and 2010

	2011	2010
ASSETS		
CURRENT ASSETS		
Cash & Cash Equivalents	$ 283,816	$ 158,138
Accounts Receivable	2,511	4,145
Total CURRENT ASSETS	286,327	162,283
FIXED ASSETS		
Land	12,271	12,271
Diking	23,917	23,917
Plant & Equipment	230,115	230,115
Sewer Project	812,351	812,351
Water Project	2,830,602	2,830,602
Accumulated Depreciation	(1,193,786)	(1,098,985)
	2,715,470	2,810,271
TOTAL ASSETS	$ 3,001,797	$ 2,972,554
LIABILITIES AND NET ASSETS		
CURRENT LIABILITIES		
Payroll Liabilities	$ 322	$ 358
Accounts Receivable - Credit Balance	1,817	1,706
Current Portion L-T Debt	18,000	17,000
Total CURRENT LIABILITIES	20,139	19,064
LONG TERM DEBT - SRF LOAN	518,000	553,000
TOTAL LIABILITIES	538,139	572,064
NET ASSETS		
Invested in Capital Assets, Net of Debt	2,380,312	2,275,573
Restricted for Debt Service	159,633	138,206
Unrestricted	(76,287)	(13,289)
Total NET ASSETS	2,463,658	2,400,490
Total LIABILITIES AND NET ASSETS	$ 3,001,797	$ 2,972,554

See accompanying accountant's compilation report.

POWER TETON COUNTY WATER AND SEWER DISTRICT
Statements of Activities
For the Years Ended December 31, 2011 and 2010

	2011	2010
OPERATING REVENUES		
Water	$ 22,430	$ 21,166
Sewer	13,907	13,190
Miscellaneous Revenues	2,950	1,842
Total OPERATING REVENUES	39,287	36,198
OPERATING EXPENSES		
Accounting & Auditing	600	625
Chemicals	6,249	2,790
Contract Labor	1,775	
Depreciation	94,801	97,572
Dues/Certification/Training	375	375
Easement & Water Assessment	160	950
Fees (Permits, Service, Recording)	976	1,391
Insurance & Bonding	1,781	1,756
Payroll Expense	10,504	10,383
Postage & Office	991	791
Repairs	7,557	29,531
Supplies	392	964
Truck Expense	948	998
Utilities	6,744	7,325
Testing Water	1,613	1,749
Total OPERATING EXPENSES	135,466	157,200
NET OPERATING REVENUES	(96,179)	(121,002)
NON-OPERATING REVENUES		
Capital Credit Refunds	147	224
Interest Revenue	911	1,364
Debt Service Revenue	70,521	65,274
Total NON-OPERATING REVENUES	71,579	66,862
NON-OPERATING EXPENSES		
Interest Expense	11,230	11,900
Loan Admin Surcharge	4,211	4,463
Special Project Expense	1,530	1,865
Total NON-OPERATING EXPENSE	16,971	18,228
TOTAL NET REVENUES (EXPENSES)	(41,571)	(72,368)
CAPITAL CONTRIBUTIONS: GRANTS	104,739	77,428
CHANGE IN NET ASSETS	63,168	5,060
BEGINNING NET ASSETS	2,400,490	2,395,430
ENDING NET ASSETS	$ 2,463,658	$ 2,400,490

See accompanying accountant's compilation report.

POWER TETON COUNTY WATER AND SEWER DISTRICT
Analysis of Cash Investments
(Savings and CD's)
For the Years
Ended December 31, 2011 and 2011

Account Description	Balance 12/31/2010	Interest Added	Transfers In/(Out)	Balance 12/31/2011
Dutton State Bank Savings # 305790	$ 35,822	$ 67	$ -	$ 35,889
MT Fed Credit Union Savings #23912	28	1	-	29
MT Fed Credit Union CD #8130	21,341	193	-	21,534
MT Fed Credit Union CD #9099	26,766	252	-	27,018
Mountain West CD #1728	16,664	200	-	16,864
Mountain West CD #7405	15,364	146	-	$ 15,510
RCFCU Savings # 2000173	15,874	53	105,551	121,478
Total Savings & CD's				238,322
Checking Accounts				
Dutton State # 900431 - Checking				45,494
RCFCU # 2000173 - Project Checking - CLOSED				-
Total Cash and Cash Equivalents				$ 283,816

See accompanying accountant's compilation report.

Statements of Fund Net Assets - Proprietary Funds
December 31, 2012 and 2011

	2012	2011
ASSETS		
CURRENT ASSETS		
Cash & Cash Equivalents	$ 295,737	$ 283,816
Accounts Receivable	2,569	2,511
Total CURRENT ASSETS	298,306	286,327
FIXED ASSETS		
Land	12,271	12,271
Diking	23,917	23,917
Plant & Equipment	246,117	230,115
Sewer Project	812,351	812,351
Water Project	2,830,602	2,830,602
Accumulated Depreciation	(1,291,768)	(1,193,786)
	2,633,490	2,715,470
TOTAL ASSETS	$ 2,931,796	$ 3,001,797
LIABILITIES AND NET ASSETS		
CURRENT LIABILITIES		
Payroll Liabilities	$ 74	$ 322
Accounts Receivable - Credit Balance	4,789	1,817
Current Portion L-T Debt	36,000	18,000
Total CURRENT LIABILITIES	40,863	20,139
LONG TERM DEBT - SRF LOAN	463,000	518,000
TOTAL LIABILITIES	503,863	538,139
NET ASSETS		
Invested in Capital Assets, Net of Debt	2,380,312	2,380,312
Restricted for Debt Service	178,101	159,633
Unrestricted	(130,480)	(76,287)
Total NET ASSETS	2,427,933	2,463,658
Total LIABILITIES AND NET ASSETS	$ 2,931,796	$ 3,001,797

See accompanying independent accountant's compilation report.

Proprietary Funds
Years Ended December 31, 2012 and 2011

	2012	2011
OPERATING REVENUES		
Water	$ 24,979	$ 22,430
Sewer	13,853	13,907
Miscellaneous Revenues	5,695	2,950
Total OPERATING REVENUES	44,527	39,287
OPERATING EXPENSES		
Accounting & Auditing	625	600
Chemicals	3,204	6,249
Contract Labor	635	1,775
Depreciation	97,982	94,801
Dues/Certification/Training	375	375
Easement & Water Assessment	171	160
Fees (Permits, Service, Recording)	185	976
Insurance & Bonding	3,697	1,781
Payroll Expense	10,098	10,504
Postage & Office	1,172	991
Repairs	5,864	7,557
Supplies	1,818	392
Testing Water	2,363	1,613
Truck Expense	1,514	948
Utilities	7,333	6,744
Total OPERATING EXPENSES	137,036	135,466
NET OPERATING REVENUES	(92,509)	(96,179)
NON-OPERATING REVENUES		
Capital Credit Refunds	146	147
Interest Revenue	562	911
Miscellaneous Revenues	800	-
Debt Service Revenue	69,769	70,521
Total NON-OPERATING REVENUES	71,277	71,579
NON-OPERATING EXPENSES		
Interest Expense	10,540	11,230
Loan Admin Surcharge	3,953	4,211
Special Project Expense	-	1,530
Total NON-OPERATING EXPENSES	14,493	16,971
TOTAL NET LOSS	(35,725)	(41,571)
CAPITAL CONTRIBUTIONS: GRANTS	-	104,739
CHANGE IN NET ASSETS	(35,725)	63,168
BEGINNING NET ASSETS	2,463,658	2,400,490
ENDING NET ASSETS	$ 2,427,933	$ 2,463,658

See accompanying independent accountant's compilation report.

POWER - TETON COUNTY WATER AND SEWER DISTRICT
Analysis of Cash Investments
(Savings and CDs)
Years Ended December 31, 2012 and 2011

Account Description	Balance 12/31/2011	Interest Added	Transfers In/(Out)	Balance 12/31/2012
Dutton State Bank Savings # 305790	$ 35,889	$ 86	$ 48,000	$ 83,975
MT Fed Credit Union Savings #23912	29	-	-	29
MT Fed Credit Union CD #8130	21,534	106	-	21,640
MT Fed Credit Union CD #9099	27,018	143	-	27,161
Mountain West CD #1728	16,864	118	-	16,982
Mountain West CD #7405	15,510	74	-	15,584
RCFCU Savings # 2000173	121,478	36	-	121,514
Total Savings & CDs				286,885
Checking Accounts				
Dutton State # 900431 - Checking				8,852
Total Cash and Cash Equivalents				$ 295,737

See accompanying independent accountant's compilation report.

POWER - TETON COUNTY
WATER AND SEWER DISTRICT
Compiled Financial Statements
December 31, 2013 and 2012

POWER - TETON COUNTY WATER AND SEWER DISTRICT
DECEMBER 31, 2013 and 2012

TABLE OF CONTENTS

INDEPENDENT ACCOUNTANT'S COMPILATION REPORT.....1 and 2

FINANCIAL STATEMENTS

Statements of Fund Net Assets – Proprietary Funds.....3
Statements of Revenues, Expenses and Changes in Fund Net Assets – Proprietary Funds.....4

SUPPLEMENTAL INFORMATION.....5

GARY KASPER & COMPANY, INC.

411 Central Avenue
P.O. Box 308
Fairfield, MT 59436

Phone (406) 467-2410
Fax (406) 467-3798

Gary G. Kasper
Licensed Public Accountant
Enrolled to Practice before IRS

Kelly McInerney
Certified Public Accountant

INDEPENDENT ACCOUNTANT'S COMPILATION REPORT

Board of Trustees
Power-Teton County Water and Sewer District
Power, Montana 59468

We have compiled the accompanying financial statements of the business-type activities of Power-Teton County Water and Sewer District as of December 31, 2013 and 2012, which comprise the Organization's basic financial statements as listed in the table of contents. We have not audited or reviewed the accompanying financial statements and, accordingly, do not express an opinion or provide any assurance about whether the financial statements are in accordance with accounting principles generally accepted in the United States of America.

The management of Power-Teton County Water and Sewer District is responsible for the preparation and fair presentation of the financial statements in accordance with accounting principles generally accepted in the United States of America and for designing, implementing, and maintaining internal control relevant to the preparation and fair presentation of the financial statements.

Our responsibility is to conduct the compilation in accordance with Statements on Standards for Accounting and Review Services issued by the American Institute of Certified Public Accountants. The objective of a compilation is to assist management in presenting financial information in the form of financial statements without undertaking to obtain or provide any assurance that there are no material modifications that should be made to the financial statements. During our compilation, we did become aware of a departure from accounting principles generally accepted in the United States of America that is described in the following paragraph.

Statements of cash flows for the years ended December 31, 2013 and 2012 have not been presented. Accounting principles generally accepted in the United States of America require that such statements be presented when financial statements purport to present financial position and changes in fund net assets.

Management has elected to omit substantially all of the disclosures required by accounting principles generally accepted in the United States of America. If the omitted disclosures were included in the financial statements, they might influence the user's conclusions about the Organization's financial position and changes in fund net assets. Accordingly, these financial statements are not designed for those who are not informed about such matters.

Gary G. Kasper, EA, LPA
Fairfield, MT 59436
May 14, 2014

POWER - TETON COUNTY WATER AND SEWER DISTRICT
Statements of Fund Net Assets - Proprietary Funds
December 31, 2013 and 2012

	2013	2012
ASSETS		
CURRENT ASSETS		
Cash & Cash Equivalents	$ 325,996	$ 295,737
Accounts Receivable	2,965	2,569
Total CURRENT ASSETS	328,961	298,306
FIXED ASSETS		
Land	12,271	12,271
Diking	23,917	23,917
Plant & Equipment	254,155	246,117
Sewer Project	812,351	812,351
Water Project	2,830,602	2,830,602
Accumulated Depreciation	(1,389,957)	(1,291,768)
	2,543,339	2,633,490
TOTAL ASSETS	$ 2,872,300	$ 2,931,796
LIABILITIES AND NET ASSETS		
CURRENT LIABILITIES		
Payroll Liabilities	$ 344	$ 74
Accounts Receivable - Credit Balance	4,093	4,789
Current Portion L-T Debt	37,000	36,000
Total CURRENT LIABILITIES	41,437	40,863
LONG TERM DEBT - SRF LOAN	426,000	463,000
TOTAL LIABILITIES	467,437	503,863
NET ASSETS		
Invested in Capital Assets, Net of Debt	2,380,312	2,380,312
Restricted for Debt Service	199,783	178,101
Unrestricted	(175,232)	(130,480)
Total NET ASSETS	2,404,863	2,427,933
Total LIABILITIES AND NET ASSETS	$ 2,872,300	$ 2,931,796

See accompanying independent accountant's compilation report.

POWER - TETON COUNTY WATER AND SEWER DISTRICT
Statements of Revenues, Expenses and Changes in Fund Net Assets -
Proprietary Funds
Years Ended December 31, 2013 and 2012

	2013	2012
OPERATING REVENUES		
Water	$ 33,578	$ 28,559
Sewer	14,362	13,853
Miscellaneous Revenues	1,235	2,115
Total OPERATING REVENUES	49,175	44,527
OPERATING EXPENSES		
Accounting & Auditing	625	625
Chemicals	5,018	3,204
Contract Labor	-	635
Depreciation	98,189	97,982
Dues/Certification/Training	425	375
Easement & Water Assessment	183	171
Fees (Permits, Service, Recording)	756	185
Insurance & Bonding	1,779	3,697
Payroll Expense	10,451	10,098
Postage & Office	1,534	1,172
Professional Fees	249	-
Repairs	1,514	5,864
Supplies	57	1,818
Testing Water	1,938	2,363
Truck Expense	1,380	1,514
Utilities	7,212	7,333
Total OPERATING EXPENSES	131,310	137,036
NET OPERATING REVENUES	(82,135)	(92,509)
NON-OPERATING REVENUES		
Capital Credit Refunds	742	146
Interest Revenue	492	562
Miscellaneous Revenues	347	800
Debt Service Revenue	70,959	69,769
Total NON-OPERATING REVENUES	72,540	71,277
NON-OPERATING EXPENSES		
Interest Expense	9,800	10,540
Loan Admin Surcharge	3,675	3,953
Special Project Expense	-	-
Total NON-OPERATING EXPENSES	13,475	14,493
TOTAL NET LOSS	(23,070)	(35,725)
CHANGE IN NET ASSETS	(23,070)	(35,725)
BEGINNING NET ASSETS	2,427,933	2,463,658
ENDING NET ASSETS	$ 2,404,863	$ 2,427,933

See accompanying independent accountant's compilation report.

SUPPLEMENTAL INFORMATION
Years ended December 31, 2013 and 2012

POWER - TETON COUNTY WATER AND SEWER DISTRICT
Analysis of Cash Investments
(Savings and CDs)
Years Ended December 31, 2013 and 2012

Account Description	Balance 12/31/2012	Interest Added	Transfers In/(Out)	Balance 12/31/2013
Dutton State Bank Savings	$ 83,975	$ 84	$ -	$ 84,059
MT Fed Credit Union Savings	29	-	-	29
MT Fed Credit Union CD	21,640	79	-	21,719
MT Fed Credit Union CD	27,161	95	-	27,256
Mountain West CD	16,982	85	-	17,067
Mountain West CD	15,584	113	-	15,697
RCFCU Savings	121,514	37	-	121,551
Total Savings & CDs				287,378
Checking Accounts				
Dutton State Bank Checking				38,618
Total Cash and Cash Equivalents				$ 325,996

See accompanying independent accountant's compilation report.

POWER - TETON COUNTY WATER AND SEWER DISTRICT
Statements of Fund Net Assets - Proprietary Funds
December 31, 2014 and 2013

	2014	2013
ASSETS		
CURRENT ASSETS		
Cash & Cash Equivalents	$ 346,523	$ 325,996
Accounts Receivable	2,123	2,965
Total CURRENT ASSETS	348,646	328,961
FIXED ASSETS		
Land	12,271	12,271
Diking	23,917	23,917
Plant & Equipment	258,611	254,155
Sewer Project	812,351	812,351
Water Project	2,830,602	2,830,602
Accumulated Depreciation	(1,488,260)	(1,389,957)
	2,449,492	2,543,339
TOTAL ASSETS	$ 2,798,138	$ 2,872,300
LIABILITIES AND NET ASSETS		
CURRENT LIABILITIES		
Payroll Liabilities	$ 402	$ 344
Accounts Receivable - Credit Balance	3,703	4,093
Current Portion L-T Debt	39,000	37,000
Total CURRENT LIABILITIES	43,105	41,437
LONG TERM DEBT - SRF LOAN	385,000	426,000
TOTAL LIABILITIES	428,105	467,437
NET ASSETS		
Invested in Capital Assets, Net of Debt	2,380,312	2,380,312
Restricted for Debt Service	218,892	199,783
Unrestricted	(229,171)	(175,232)
Total NET ASSETS	2,370,033	2,404,863
Total LIABILITIES AND NET ASSETS	$ 2,798,138	$ 2,872,300

See accompanying independent accountant's compilation report.

Revenues, Expenses and Changes in Fund Net Assets -
Proprietary Funds
Years Ended December 31, 2014 and 2013

	2014	2013
OPERATING REVENUES		
Water	$ 34,788	$ 33,578
Sewer	13,690	14,362
Miscellaneous Revenues	2,112	1,235
Total OPERATING REVENUES	50,590	49,175
OPERATING EXPENSES		
Accounting & Auditing	660	625
Bank Service Charges	19	-
Chemicals	6,015	5,018
Depreciation	98,303	98,189
Dues/Certification/Training	425	425
Easement & Water Assessment	196	183
Fees (Permits, Service, Recording)	920	756
Insurance & Bonding	1,813	1,779
Payroll Expense	11,285	10,451
Postage & Office	655	1,534
Professional Fees	9,026	249
Repairs	1,539	1,514
Supplies	1,296	57
Testing Water	1,849	1,938
Truck Expense	1,282	1,380
Utilities	9,033	7,212
Total OPERATING EXPENSES	144,316	131,310
NET OPERATING REVENUES	(93,726)	(82,135)
NON-OPERATING REVENUES		
Capital Credit Refunds	369	742
Interest Revenue	527	492
Miscellaneous Revenues	-	347
Debt Service Revenue	68,287	70,959
Total NON-OPERATING REVENUES	69,183	72,540
NON-OPERATING EXPENSES		
Interest Expense	7,452	9,800
Loan Admin Surcharge	2,658	3,675
Loan Loss Reserve	177	-
Total NON-OPERATING EXPENSES	10,287	13,475
TOTAL NET LOSS	(34,830)	(23,070)
CHANGE IN NET ASSETS	(34,830)	(23,070)
BEGINNING NET ASSETS	2,404,863	2,427,933
ENDING NET ASSETS	$ 2,370,033	$ 2,404,863

See accompanying independent accountant's compilation report.

POWER - TETON COUNTY WATER AND SEWER DISTRICT
Analysis of Cash Investments
(Savings and CDs)
Years Ended December 31, 2014 and 2013

Account Description	Balance 12/31/2013	Interest Added	Transfers In/(Out)	Balance 12/31/2014
Dutton State Bank Savings	$ 84,059	$ 98	$ 40,000	$ 124,157
MT Fed Credit Union Savings	29	-	-	29
MT Fed Credit Union CD	21,719	76	-	21,795
MT Fed Credit Union CD	27,256	96	-	27,352
Mountain West CD	17,067	51	-	17,118
Mountain West CD	15,697	57	-	15,754
RCFCU CD	-	115	121,560	121,675
RCFCU Savings	121,551	34	(121,560)	25
Total Savings & CDs				327,905
Checking Accounts				
Dutton State Bank Checking				18,618
Total Cash and Cash Equivalents				$ 346,523

See accompanying independent accountant's compilation report.

POWER - TETON COUNTY WATER AND SEWER DISTRICT
Statements of Fund Net Assets - Proprietary Funds
December 31, 2015 and 2014

	2015	2014
ASSETS		
CURRENT ASSETS		
Cash & Cash Equivalents	$ 278,584	$ 346,523
Accounts Receivable	1,271	2,123
Total CURRENT ASSETS	279,855	348,646
FIXED ASSETS		
Land	12,271	12,271
Diking	23,917	23,917
Plant & Equipment	258,611	258,611
Sewer Project	832,074	812,351
Water Project	2,903,050	2,830,602
Accumulated Depreciation	(1,588,867)	(1,488,260)
	2,441,056	2,449,492
TOTAL ASSETS	$ 2,720,911	$ 2,798,138
LIABILITIES AND NET ASSETS		
CURRENT LIABILITIES		
Payroll Liabilities	$ 402	$ 402
Accounts Receivable - Credit Balance	2,226	3,703
Current Portion L-T Debt	40,000	39,000
Total CURRENT LIABILITIES	42,628	43,105
LONG TERM DEBT - SRF LOAN	343,000	385,000
TOTAL LIABILITIES	385,628	428,105
NET ASSETS		
Invested in Capital Assets, Net of Debt	2,380,312	2,380,312
Restricted for Debt Service	238,348	218,892
Unrestricted	(283,377)	(229,171)
Total NET ASSETS	2,335,283	2,370,033
Total LIABILITIES AND NET ASSETS	$ 2,720,911	$ 2,798,138

See accompanying independent accountant's compilation report.

POWER - TETON COUNTY WATER AND SEWER DISTRICT
Statements of Revenues, Expenses and Changes in Fund Net Assets -
Proprietary Funds
Years Ended December 31, 2015 and 2014

	2015	2014
OPERATING REVENUES		
Water	$ 34,775	$ 34,788
Sewer	13,818	13,690
Miscellaneous Revenues	1,743	2,112
Total OPERATING REVENUES	50,336	50,590
OPERATING EXPENSES		
Accounting & Auditing	675	660
Bank Service Charges	-	19
Chemicals	6,741	6,015
Depreciation	100,607	98,303
Dues/Certification/Training	425	425
Easement & Water Assessment	211	196
Fees (Permits, Service, Recording)	768	920
Insurance & Bonding	1,846	1,813
Payroll Expense	11,232	11,285
Postage & Office	834	655
Professional Fees	1,000	9,026
Repairs	8,980	1,539
Supplies	2,672	1,296
Testing Water	2,076	1,849
Truck Expense	1,235	1,282
Utilities	8,343	9,033
Total OPERATING EXPENSES	147,645	144,316
NET OPERATING REVENUES	(97,309)	(93,726)
NON-OPERATING REVENUES		
Capital Credit Refunds	332	369
Interest Revenue	1,858	527
Miscellaneous Revenues	-	-
Debt Service Revenue	69,208	68,287
Total NON-OPERATING REVENUES	71,398	69,183
NON-OPERATING EXPENSES		
Interest Expense	5,175	7,452
Loan Admin Surcharge	3,105	2,658
Loan Loss Reserve	559	177
Total NON-OPERATING EXPENSES	8,839	10,287
TOTAL NET LOSS	(34,750)	(34,830)
CHANGE IN NET ASSETS	(34,750)	(34,830)
BEGINNING NET ASSETS	2,370,033	2,404,863
ENDING NET ASSETS	$ 2,335,283	$ 2,370,033

See accompanying independent accountant's compilation report.

POWER - TETON COUNTY WATER AND SEWER DISTRICT
Analysis of Cash Investments
(Savings and CDs)
Years Ended December 31, 2015 and 2014

Account Description	Balance 12/31/2014	Interest Added	Transfers In/(Out)	Balance 12/31/2015
Dutton State Bank Savings	$ 124,157	$ 114	$ (58,942)	$ 65,330
MT Fed Credit Union Savings	29	-	-	29
MT Fed Credit Union CD	21,795	76	-	21,871
MT Fed Credit Union CD	27,352	84	(27,435)	0
MT Fed Credit Union CD	-	40	27,435	27,475
First Interstate Bank CD	17,118	51	-	17,169
First Interstate Bank CD	15,754	35	-	15,789
RCFCU CD	121,675	1,457	-	123,132
RCFCU Savings	25	-	-	25
Total Savings & CDs				270,821
Checking Accounts				
Dutton State Bank Checking				7,763
Total Cash and Cash Equivalents				$ 278,584

See accompanying independent accountant's compilation report.

POWER - TETON COUNTY
WATER AND SEWER DISTRICT
Compiled Financial Statements
December 31, 2016 and 2015

POWER - TETON COUNTY WATER AND SEWER DISTRICT
DECEMBER 31, 2016 and 2015

TABLE OF CONTENTS

INDEPENDENT ACCOUNTANT'S COMPILATION REPORT.....1 and 2

FINANCIAL STATEMENTS

Statements of Fund Net Assets – Proprietary Funds.....3
Statements of Revenues, Expenses and Changes in Fund Net Assets – Proprietary Funds.....4

SUPPLEMENTAL INFORMATION.....5

GARY KASPER & COMPANY, INC.

324 Central Avenue
P.O. Box 308
Fairfield, MT 59436

Phone (406) 467-2410
Fax (406) 467-3798

Gary G. Kasper
Licensed Public Accountant
Enrolled to Practice before IRS

Kelly McInerney
Certified Public Accountant

INDEPENDENT ACCOUNTANT'S COMPILATION REPORT

Board of Trustees
Power-Teton County Water and Sewer District
Power, Montana 59468

Management is responsible for the accompanying financial statements of the business-type activities of Power-Teton County Water and Sewer District (a corporation) as of December 31, 2016 and 2015, which comprise the Organization's basic financial statements as listed in the table of contents, in accordance with accounting principles generally accepted in the United States of America. I have performed a compilation engagement in accordance with Statements on Standards for Accounting and Review Services promulgated by the Accounting and Review Services Committee of the AICPA. I did not audit or review the financial statements nor was I required to perform any procedures to verify the accuracy or completeness of the information provided by management. Accordingly, I do not express an opinion, a conclusion, nor provide any form of assurance on these financial statements.

Management has elected to omit substantially all of the disclosures and the statements of cash flows required by accounting principles generally accepted in the United States of America. If the omitted disclosures and statements of cash flows were included in the financial statements, they might influence the user's conclusions about the Organization's financial position and changes in fund net assets. Accordingly, the financial statements are not designed for those who are not informed about such matters.

Gary G. Kasper

Gary G. Kasper, EA, LPA
Fairfield, MT 59436
June 7, 2017

POWER - TETON COUNTY WATER AND SEWER DISTRICT
Statements of Fund Net Assets - Proprietary Funds
December 31, 2016 and 2015

	2016	2015
ASSETS		
CURRENT ASSETS		
Cash & Cash Equivalents	$ 310,964	$ 278,584
Accounts Receivable	1,050	1,271
Total CURRENT ASSETS	312,014	279,855
FIXED ASSETS		
Land	12,271	12,271
Diking	23,917	23,917
Plant & Equipment	258,611	258,611
Sewer Project	832,074	832,074
Water Project	2,903,050	2,903,050
Accumulated Depreciation	(1,689,474)	(1,588,867)
	2,340,449	2,441,056
TOTAL ASSETS	$ 2,652,463	$ 2,720,911
LIABILITIES AND NET ASSETS		
CURRENT LIABILITIES		
Payroll Liabilities	$ 402	$ 402
Accounts Receivable - Credit Balance	2,711	2,226
Current Portion L-T Debt	42,000	40,000
Total CURRENT LIABILITIES	45,113	42,628
LONG TERM DEBT - SRF LOAN	299,000	343,000
TOTAL LIABILITIES	344,113	385,628
NET ASSETS		
Invested in Capital Assets, Net of Debt	2,380,312	2,380,312
Restricted for Debt Service	260,689	238,348
Unrestricted	(332,651)	(283,377)
Total NET ASSETS	2,308,350	2,335,283
Total LIABILITIES AND NET ASSETS	$ 2,652,463	$ 2,720,911

See accompanying independent accountant's compilation report.

POWER - TETON COUNTY WATER AND SEWER DISTRICT
Statements of Revenues, Expenses and Changes in Fund Net Assets -
Proprietary Funds
Years Ended December 31, 2016 and 2015

	2016	2015
OPERATING REVENUES		
Water	$ 34,251	$ 34,775
Sewer	14,746	13,818
Miscellaneous Revenues	1,618	1,743
Total OPERATING REVENUES	50,615	50,336
OPERATING EXPENSES		
Accounting & Auditing	700	675
Bank Service Charges	-	-
Chemicals	6,128	6,741
Depreciation	100,607	100,607
Dues/Certification/Training	425	425
Easement & Water Assessment	227	211
Fees (Permits, Service, Recording)	774	768
Insurance & Bonding	1,995	1,846
Payroll Expense	11,692	11,232
Postage & Office	980	834
Professional Fees	-	1,000
Repairs	7,490	8,980
Supplies	1,642	2,672
Testing Water	1,994	2,076
Truck Expense	752	1,235
Utilities	8,919	8,343
Total OPERATING EXPENSES	144,325	147,645
NET OPERATING REVENUES	(93,710)	(97,309)
NON-OPERATING REVENUES		
Capital Credit Refunds	279	332
Interest Revenue	2,156	1,858
Miscellaneous Revenues	-	-
Debt Service Revenue	72,302	69,208
Total NON-OPERATING REVENUES	74,737	71,398
NON-OPERATING EXPENSES		
Interest Expense	4,656	5,175
Loan Admin Surcharge	2,794	3,105
Loan Loss Reserve	510	559
Total NON-OPERATING EXPENSES	7,960	8,839
TOTAL NET LOSS	(26,933)	(34,750)
CHANGE IN NET ASSETS	(26,933)	(34,750)
BEGINNING NET ASSETS	2,335,283	2,370,033
ENDING NET ASSETS	$ 2,308,350	$ 2,335,283

See accompanying independent accountant's compilation report.

SUPPLEMENTAL INFORMATION
Years ended December 31, 2016 and 2015

POWER - TETON COUNTY WATER AND SEWER DISTRICT
Analysis of Cash Investments
(Savings and CDs)
Years Ended December 31, 2016 and 2015

Account Description	Balance 12/31/2015	Interest Added	Transfers In/(Out)	Balance 12/31/2016
Dutton State Bank Savings	$ 65,330	$ 65	$ -	$ 65,395
MT Fed Credit Union Savings	29	-	-	29
MT Fed Credit Union CD	21,871	209	-	22,080
MT Fed Credit Union CD	-	-	-	-
MT Fed Credit Union CD	27,475	319	-	27,794
First Interstate Bank CD	17,169	43	-	17,212
First Interstate Bank CD	15,789	43	-	15,832
RCFCU CD	123,132	1,477	-	124,609
RCFCU Savings	25	-	-	25
Total Savings & CDs				272,976
Checking Accounts				
Dutton State Bank Checking				37,988
Total Cash and Cash Equivalents				$ 310,964

See accompanying independent accountant's compilation report.

Amorization
Schedule for
Phase 1 + Phase 2
phase 3 - ALL GRANTS

WRF-04052
50364391 (50364453)
99CTLNF64

STATE OF MONTANA
GENERAL OBLIGATION BONDS
DRINKING WATER
(REVOLVING FUND PROGRAM)

Final Schedule B

BORROWER: Power-Teton W & S Dist
PROJECT NAME: Wtr System Improv
LOAN COMMITMENT: $400,000
INTEREST RATE: 2.75%

FINAL LOAN PAYMENT: 7/1/2023
TOTAL # OF LOAN PAYMENTS: 40
PROJECT NUMBER:
DATE OF LOAN FUNDING: 11/18/2003

PAYMENT DUE	ADM EXPENSE SURCHARGE	LOAN LOSS SURCHARGE	INTEREST PAYMENT	PRINCIPAL PAYMENT	O/S LOAN BALANCE	TOTAL AMOUNT OF PAYMENT
01/01/04	36.15	0.00	96.39	8,000.00	32,349.00	$8,132.54
07/01/04	962.52	0.00	2,566.73	8,000.00	364,000.00	$11,529.25
01/01/05	1,372.50	0.00	3,660.00	8,000.00	376,000.00	$13,032.50
07/01/05	1,410.00	0.00	3,760.00	8,000.00	368,000.00	$13,170.00
01/01/06	1,380.00	0.00	3,680.00	8,000.00	360,000.00	$13,060.00
07/01/06	1,350.00	0.00	3,600.00	8,000.00	352,000.00	$12,950.00
01/01/07	1,320.00	0.00	3,520.00	8,000.00	344,000.00	$12,840.00
07/01/07	1,290.00	0.00	3,440.00	8,000.00	336,000.00	$12,730.00
01/01/08	1,260.00	0.00	3,360.00	8,000.00	328,000.00	$12,620.00
07/01/08	1,230.00	0.00	3,280.00	9,000.00	319,000.00	$13,510.00
01/01/09	1,196.25	0.00	3,190.00	9,000.00	310,000.00	$13,386.25
07/01/09	1,162.50	0.00	3,100.00	9,000.00	301,000.00	$13,262.50
01/01/10	1,128.75	0.00	3,010.00	9,000.00	292,000.00	$13,138.75
07/01/10	1,095.00	0.00	2,920.00	9,000.00	283,000.00	$13,015.00
01/01/11	1,061.25	0.00	2,830.00	9,000.00	274,000.00	$12,891.25
07/01/11	1,027.50	0.00	2,740.00	9,000.00	265,000.00	$12,767.50
01/01/12	993.75	0.00	2,650.00	9,000.00	256,000.00	$12,643.75
07/01/12	960.00	0.00	2,560.00	10,000.00	246,000.00	$13,520.00
01/01/13	922.50	0.00	2,460.00	10,000.00	236,000.00	$13,382.50
07/01/13	885.00	0.00	2,360.00	10,000.00	226,000.00	$13,245.00
01/01/14	847.50	0.00	2,260.00	10,000.00	216,000.00	$13,107.50
07/01/14	810.00	0.00	2,160.00	10,000.00	206,000.00	$12,970.00
01/01/15	772.50	0.00	2,060.00	10,000.00	196,000.00	$12,832.50
07/01/15	735.00	0.00	1,960.00	10,000.00	186,000.00	$12,695.00
01/01/16	697.50	0.00	1,860.00	11,000.00	175,000.00	$13,557.50
07/01/16	656.25	0.00	1,750.00	11,000.00	164,000.00	$13,406.25
01/01/17	615.00	0.00	1,640.00	11,000.00	153,000.00	$13,255.00
07/01/17	573.75	0.00	1,530.00	11,000.00	142,000.00	$13,103.75
01/01/18	532.50	0.00	1,420.00	11,000.00	131,000.00	$12,952.50
07/01/18	491.25	0.00	1,310.00	11,000.00	120,000.00	$12,801.25
01/01/19	450.00	0.00	1,200.00	11,000.00	109,000.00	$12,650.00
07/01/19	408.75	0.00	1,090.00	12,000.00	97,000.00	$13,498.75
01/01/20	363.75	0.00	970.00	12,000.00	85,000.00	$13,333.75
07/01/20	318.75	0.00	850.00	12,000.00	73,000.00	$13,168.75
01/01/21	273.75	0.00	730.00	12,000.00	61,000.00	$13,003.75
07/01/21	228.75	0.00	610.00	12,000.00	49,000.00	$12,838.75
01/01/22	183.75	0.00	490.00	12,000.00	37,000.00	$12,673.75
07/01/22	138.75	0.00	370.00	13,000.00	24,000.00	$13,508.75
01/01/23	90.00	0.00	240.00	11,000.00	13,000.00	$11,330.00
07/01/23	48.75	0.00	130.00	13,000.00	0.00	$13,178.75
				400,000.00		

WRF-06084
50364478
999CTLT66

STATE OF MONTANA
GENERAL OBLIGATION BONDS
DRINKING WATER
(REVOLVING FUND PROGRAM)

Final Schedule B

Phase 2

Loan #2

Old

BORROWER: Power-Teton Wtr & Swr Dist FINAL LOAN PAYMENT: 7/1/2025
PROJECT NAME: Water Project TOTAL # OF LOAN PAYMENTS: 40
LOAN COMMITMENT: $375,000 PROJECT NUMBER:
INTEREST RATE: 2.75% DATE OF LOAN FUNDING: 10/4/2005

PAYMENT DUE	ADM EXPENSE SURCHARGE	INTEREST PAYMENT	PRINCIPAL PAYMENT	O/S LOAN BALANCE	TOTAL AMOUNT OF PAYMENT
01/01/06	469.99	1,253.30	7,000.00	290,492.00	$8,723.29
07/01/06	1,268.60	3,382.94	7,000.00	339,365.00	$11,651.55
01/01/07	1,272.62	3,393.65	7,000.00	332,365.00	$11,666.27
07/01/07	1,246.37	3,323.65	7,000.00	325,365.00	$11,570.02
01/01/08	1,297.64	3,460.38	7,000.00	340,000.00	$11,758.03
07/01/08	1,275.00	3,400.00	7,000.00	333,000.00	$11,675.00
01/01/09	1,248.75	3,330.00	8,000.00	325,000.00	$12,578.75
07/01/09	1,218.75	3,250.00	7,000.00	318,000.00	$11,468.75
01/01/10	1,192.50	3,180.00	7,000.00	311,000.00	$11,372.50
07/01/10	1,166.25	3,110.00	7,000.00	304,000.00	$11,276.25
01/01/11	1,140.00	3,040.00	8,000.00	296,000.00	$12,180.00
07/01/11	1,110.00	2,960.00	8,000.00	288,000.00	$12,070.00
01/01/12	1,080.00	2,880.00	8,000.00	280,000.00	$11,960.00
07/01/12	1,050.00	2,800.00	8,000.00	272,000.00	$11,850.00
01/01/13	1,020.00	2,720.00	9,000.00	263,000.00	$12,740.00
07/01/13	986.25	2,630.00	8,000.00	255,000.00	$11,616.25
01/01/14	956.25	2,550.00	8,000.00	247,000.00	$11,506.25
07/01/14	926.25	2,470.00	8,000.00	239,000.00	$11,396.25
01/01/15	896.25	2,390.00	9,000.00	230,000.00	$12,286.25
07/01/15	862.50	2,300.00	9,000.00	221,000.00	$12,162.50
01/01/16	828.75	2,210.00	9,000.00	212,000.00	$12,038.75
07/01/16	795.00	2,120.00	9,000.00	203,000.00	$11,915.00
01/01/17	761.25	2,030.00	9,000.00	194,000.00	$11,791.25
07/01/17	727.50	1,940.00	9,000.00	185,000.00	$11,667.50
01/01/18	693.75	1,850.00	9,000.00	176,000.00	$11,543.75
07/01/18	660.00	1,760.00	9,000.00	167,000.00	$11,420.00
01/01/19	626.25	1,670.00	10,000.00	157,000.00	$12,296.25
07/01/19	588.75	1,570.00	10,000.00	147,000.00	$12,158.75
01/01/20	551.25	1,470.00	10,000.00	137,000.00	$12,021.25
07/01/20	513.75	1,370.00	9,000.00	128,000.00	$10,883.75
01/01/21	480.00	1,280.00	10,000.00	118,000.00	$11,760.00
07/01/21	442.50	1,180.00	10,000.00	108,000.00	$11,622.50
01/01/22	405.00	1,080.00	10,000.00	98,000.00	$11,485.00
07/01/22	367.50	980.00	11,000.00	87,000.00	$12,347.50
01/01/23	326.25	870.00	11,000.00	76,000.00	$12,196.25
07/01/23	285.00	760.00	11,000.00	65,000.00	$12,045.00
01/01/24	243.75	650.00	12,000.00	53,000.00	$12,893.75
07/01/24	198.75	530.00	12,000.00	41,000.00	$12,728.75
01/01/25	153.75	410.00	15,000.00	26,000.00	$15,563.75
07/01/25	97.50	260.00	26,000.00	0.00	$26,357.50
			375,000.00		

Old

STATE OF MONTANA
GENERAL OBLIGATION BONDS
DRINING WATER
(REVOLVING FUND PROGRAM) SER 09

Loan # 2
new

BORROWER:	Power-Teton		
PROJECT NAME:		FINAL LOAN PAYMENT:	7/1/2025
LOAN COMMITMENT:	$247,000	# OF LOAN PAYMENTS:	23
LOAN AMOUNT:	247,000	PROJECT NUMBER:	
INTEREST RATE:	2.25%	DATE OF FUNDING:	3/18/2014

	PAYMENT DUE	LOAN LOSS RESERVE	ADM EXPENSE SURCHARGE	INTEREST PAYMENT	PRINCIPAL PAYMENT	O/S LOAN BALANCE	TOTAL AMOUNT OF PAYMENT	
1	7/1/2014	interest 176.67	530.02	883.37	9,000.00	238,000.00	$10,590.06	
2	1/1/2015	297.50	892.50	1,487.50	10,000.00	228,000.00	New * $12,677.50	$ 23,267.56
3	7/1/2015	285.00	855.00	1,425.00	9,000.00	219,000.00	$11,565.00	
4	1/1/2016	[illegible]	[illegible]	[illegible]	10,000.00	209,000.00	$12,463.75	$ 24,028.75
5	7/1/2016	261.25	783.75	1,306.25	10,000.00	199,000.00	$12,351.25	
6	1/1/2017	248.75	746.25	1,243.75	10,000.00	189,000.00	$12,238.75	$ 24,590.00
7	7/1/2017	236.25	708.75	1,181.25	10,000.00	179,000.00	$12,126.25	
8	1/1/2018	223.75	671.25	1,118.75	10,000.00	169,000.00	$12,013.75	$ 24,140.00
9	7/1/2018	211.25	633.75	1,056.25	10,000.00	159,000.00	$11,901.25	
10	1/1/2019	198.75	596.25	993.75	10,000.00	149,000.00	$11,788.75	$ 23,690.00
11	7/1/2019	186.25	558.75	931.25	11,000.00	138,000.00	$12,676.25	
12	1/1/2020	172.50	517.50	862.50	11,000.00	127,000.00	$12,552.50	$ 25,228.75
13	7/1/2020	158.75	476.25	793.75	10,000.00	117,000.00	$11,428.75	
14	1/1/2021	146.25	438.75	731.25	10,000.00	107,000.00	$11,316.25	$ 22,745.00
15	7/1/2021	133.75	401.25	668.75	10,000.00	97,000.00	$11,203.75	
16	1/1/2022	121.25	363.75	606.25	11,000.00	86,000.00	$12,091.25	$ 23,295.00
17	7/1/2022	107.50	322.50	537.50	11,000.00	75,000.00	$11,967.50	
18	1/1/2023	93.75	281.25	468.75	11,000.00	64,000.00	$11,843.75	$ 23,811.25
19	7/1/2023	80.00	240.00	400.00	11,000.00	53,000.00	$11,720.00	
20	1/1/2024	66.25	198.75	331.25	12,000.00	41,000.00	$12,596.25	$ 24,316.25
21	7/1/2024	51.25	153.75	256.25	13,000.00	28,000.00	$13,461.25	
22	1/1/2025	35.00	105.00	175.00	13,000.00	15,000.00	$13,315.00	$ 26,776.25
23	7/1/2025	18.75	56.25	93.75	15,000.00	0.00	$15,168.75	$15,168.75
		3,784.17	11,352.52	18,920.87	247,000.00		281,057.56	$ 281,057.56

int

Principal

Rewritten

increased

[illegible] x 2.25%

STATE OF MONTANA
GENERAL OBLIGATION BONDS
DRINING WATER
(REVOLVING FUND PROGRAM) SER 09

Loan #1
New

BORROWER: Power-Teton

PROJECT NAME:		FINAL LOAN PAYMENT:	7/1/2023
LOAN COMMITMENT:	$216,000	# OF LOAN PAYMENTS:	19
LOAN AMOUNT:	216,000	PROJECT NUMBER:	
INTEREST RATE:	2.00%	DATE OF FUNDING:	3/18/2014

	PAYMENT DUE	LOAN LOSS RESERVE	ADM EXPENSE SURCHARGE	INTEREST PAYMENT	PRINCIPAL PAYMENT	O/S LOAN BALANCE	TOTAL AMOUNT OF PAYMENT	
1	7/1/2014	0.00	463.50	772.50	10,000.00	206,000.00	$11,236.00	
2	1/1/2015	0.00	772.50	1,287.50	10,000.00	196,000.00	$12,060.00	$ 23,296.00
3	7/1/2015	0.00	735.00	1,225.00	11,000.00	185,000.00	$12,960.00	
4	1/1/2016	0.00	693.75	1,156.25	11,000.00	174,000.00	$12,850.00	$ 25,810.00
5	7/1/2016	0.00	652.50	1,087.50	11,000.00	163,000.00	$12,740.00	
6	1/1/2017	0.00	611.25	1,018.75	11,000.00	152,000.00	$12,630.00	$ 25,370.00
7	7/1/2017	0.00	570.00	950.00	11,000.00	141,000.00	$12,520.00	
8	1/1/2018	0.00	528.75	881.25	11,000.00	130,000.00	$12,410.00	$ 24,930.00
9	7/1/2018	0.00	487.50	812.50	11,000.00	119,000.00	$12,300.00	
10	1/1/2019	0.00	446.25	743.75	11,000.00	108,000.00	$12,190.00	$ 24,490.00
11	7/1/2019	0.00	405.00	675.00	11,000.00	97,000.00	$12,080.00	
12	1/1/2020	0.00	363.75	606.25	12,000.00	85,000.00	$12,970.00	$ 25,050.00
13	7/1/2020	0.00	318.75	531.25	12,000.00	73,000.00	$12,850.00	
14	1/1/2021	0.00	273.75	456.25	12,000.00	61,000.00	$12,730.00	$ 25,580.00
15	7/1/2021	0.00	228.75	381.25	12,000.00	49,000.00	$12,610.00	
16	1/1/2022	0.00	183.75	306.25	12,000.00	37,000.00	$12,490.00	$ 25,100.00
17	7/1/2022	0.00	138.75	231.25	12,000.00	25,000.00	$12,370.00	
18	1/1/2023	0.00	93.75	156.25	12,000.00	13,000.00	$12,250.00	$ 24,620.00
19	7/1/2023	0.00	48.75	81.25	13,000.00	0.00	$13,130.00	$ 13,130.00
		0.00	8,016.00	13,360.00	216,000.00		237,376.00	

APPENDIX 4 - A

Alternative T-2 Supporting Documents

Power Information

Jan 3, 2018 From Karal Walker on water treatment plant tour:

- The south raw water wet well draws water from the Muddy Creek
- The north raw water wet well draws water from the settling pond
- Most of the sediment is made up of silt
- The sediment will settle fast, but it still is a problem in the wet wells
- Ferric is sued for flocculation
- Ferric works much better than alum for settlement.
- Water from the Muddy Creek settles better than water from the settlement pond.
- Pilot testing verifies that ferric works best.
- The plant gets a lot of grass in the raw water pump screens and propeller meters.
- The flash mixer gets plugged frequently.
- The treatment trains need a door in the bottom of the tank to allow access without dismantling the trains to get to the bottom of the tank
- Pex lines have been used to replace copper lines in the plant. Most of the problems is with small diameter copper lines.

Ultrafiltration Systems

Versatile membrane solutions for potable and process water treatment

ISO 9001 WesTech CERTIFIED QUALITY SYSTEM

WesTech®

Systems Designed With You in Mind

WesTech leads the way in membrane system innovation with versatile open-platform designs, packaged systems for small communities, and solutions for challenging retrofit applications. WesTech in-house electrical and programming experts provide integrated and intuitive controls for seamless operation and performance monitoring. Our technical expertise, complete process knowledge, and strong commitment to service make WesTech the best partner to achieve a state-of-the-art treatment system. Big or small, challenging or straight-forward. WesTech can help.

Ultrafiltration/microfiltration is advanced membrane filtration technology used for reliable production of high-quality potable and process water. Membranes act as an absolute barrier with a small nominal pore size (0.01-0.1 µm) to remove microbial and viral pathogens, suspended solids, turbidity, particulate metals, and coagulated organic matter.

Applications:

- Municipal Drinking Water
- Wastewater Reuse
- NF/RO Pretreatment
- Industrial Process Water
- Mine Water Remediation
- Retrofit Systems

The WesTech Difference:

- Customizable or Packaged Systems
- Innovative, Space-Saving Designs
- Strong, Fouling-Resistant Membranes
- Low Chemical & Energy Consumption
- Piloting and Testing Services
- Long-Term Customer Support

CDPH and NSF/ANSI 419, Title 22, and NSF/ANSI 61 Certified

VersaFilter™ Open-Platform Systems will accommodate all leading commercially-available modules to adapt to innovation and protect your ultrafiltration system investment.

AltaPac™ Packaged UF Systems are economic, complete treatment solutions optimally configured for small communities and remote locations.

With **Retrofit Engineering** experience, WesTech offers you creative and cost-conscious solutions to upgrade existing membrane or conventional systems.

Our **Intelligent Controls** simplify your operation with remote monitoring, data analysis, automatic sequencing with alarm protections, and complete plant integration.

WesTech Complete Process Treatment Systems

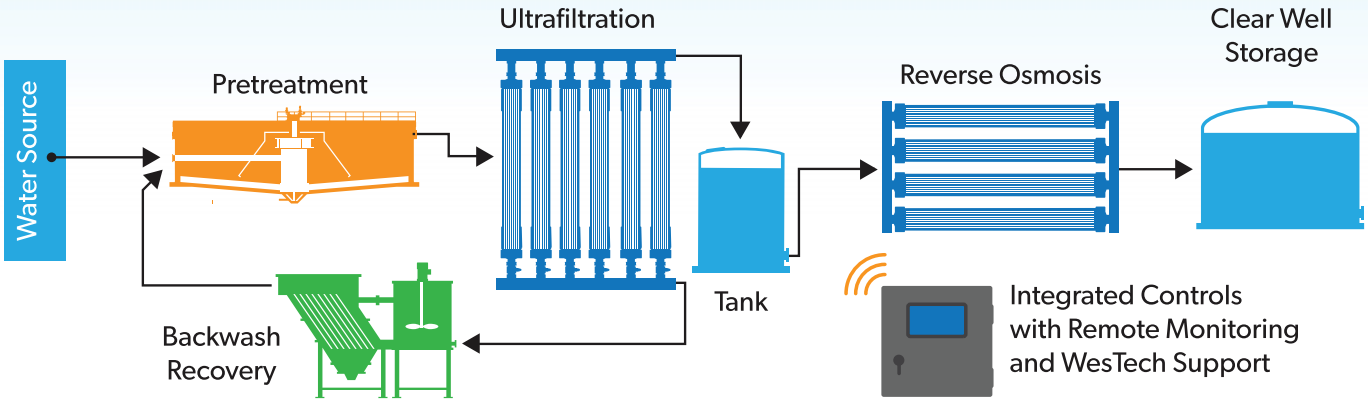

Tel: 801.265.1000
westech-inc.com
membranes@westech-inc.com
Salt Lake City, Utah, USA

© WesTech Engineering, Inc. 2016

WesTech

Home / Products /

Ultrafiltration Membrane System

Ultrafiltration Membrane System:

WesTech low-pressure membrane filtration (ultrafiltration/microfiltration) systems use hollow fiber membranes with small pore sizes (0.01-0.1 µm) to reliably produce high quality water using an absolute barrier. WesTech UF/MF systems meet requirements for 4-log removal of Cryptosporidium and Giardia and Title 22 certifications, reduce turbidity below 0.1 NTU, and surpass SDI guidelines for pretreatment to NF/RO. WesTech systems are highly automated, intuitive, and efficiently designed.

WesTech is a leader in membrane systems with over 10 years of experience and more than 50 installations. Our engineering expertise, process knowledge, and service-oriented approach enable us to provide customized and innovative solutions to meet the treatment goals of any project, big or small, for a variety of applications.

The WesTech Ultrafiltration Membrane System is a modular, skid-mounted ultrafiltration series ideal for applications ranging from 0.5 - 40 MGD. For smaller applications, find out about our AltaPac system.

The WesTech Advantage:

Over 50 installations with over 10 years' experience in membrane systems
Complete equipment solutions from pretreatment to post treatment
Customizable and pre-engineered systems for small and large flow rates
Flexible module racks for compatibility with various module configurations
More clarifiers as pretreatment to membranes than any other manufacturer

Features

Complete Treatment Systems with Ancillary Components

Durable NSF 61 / CDPH Certified Membranes

ISO 9001 Certified Company

UL 508A Control Panels

NEMA 4/4x Electrical Enclosures

Optional Features:

Service and Maintenance Plans

Chemical Neutralization System

Extended Warranties

Benefits

Skid-mounted for ease of installation

Automated for ease of operation

Compact footprint

Meet redundancy requirements

Modular and expandable design

Reduced chemical and energy consumption

Reduced backwash volumes

Reduced reverse osmosis operating cost

Applications

Municipal Drinking Water (compliance with US EPA LT2ESWTR)

Tertiary Wastewater Filtration

Industrial Process Water

Pretreatment to Nanofiltration/Reverse Osmosis

Specifications

Surface area: 775 ft^2 / 72 m^2 per module

Housing material: PVC

Length: 7.09 ft

Diameter: 8.5 inches

Raw water temperature: 104F

Raw water pH: 1-10

Max pressure in filtration: 43.5 psi

Typical flow capacity per module: 10-45 gpm

Dead-end outside-in filtration

Photos

WesTech Newsletter

Sign up for the WesTech monthly newsletter to receive content you can use to more effectively design, manage, and maintain your operations.

Email*

Newsletter Type*

- Please Select -

SUBSCRIBE

Literature

BROCHURES

Ultrafiltration Systems Brochure ›

Municipal Solutions ›

Ultrafiltration Pilot Plant Details ›

CASE STUDIES

Selenium Removal from Surface Water ›

The Green River Turns Clear ›

Reduction of Disinfection By-Products ›

Parts & Services

Laboratory Services

Field Service

Preventative Maintenance

Drive Retrofits

MEVA / OSNA Parts

Wear Parts to Stock

About Us

Who is WesTech?

Why Choose WesTech?

Corporate Culture

Calendar of Events

WesTech News

In the Press

Career Opportunities

Other Links

Agent Portal

Outlook

Process Flow Sheets

Privacy Policy

WesTech Resources

All content © 2018 WesTech Engineering, Inc. All rights reserved. 801-265-1000 | Follow us on

DATA SHEET & SPECIFICATIONS

OpenLine™

THE OPEN CHANNEL UV DISINFECTION SYSTEM

MUNICIPAL WASTEWATER DISINFECTION

	OpenLine 20	OpenLine 40	OpenLine 60	OpenLine 80	OpenLine 90	OpenLine 120	OpenLine 160
Flow† (gpm)	90	175	265	350	400	525	700
Number of Lamps	2	4	6	8	9	12	16
Lamp Power (kW)	0.48	0.96	1.44	1.92	2.16	2.88	3.84

Power Supply 110/220 Volt, 50/60 Hz
UV Dose‡ [mJ/cm^2] > 30

† Flow can be increased by positioning two units in series or splitting flow between two units in parallel.

‡ UV Dose dependent on UV-Transmittance, TSS and water temperature. Values quoted assume 65% UV-T, TSS < 20 mg/L and max water temp 90° F.

The OpenLine System Includes:

- UV Intensity Monitor
- Lamp Hour Counter
- Lamp Status Monitoring
- Failure Alarms
- 14,000 Hour Lamp Life Guarantee
- Standard 18 Month Warranty

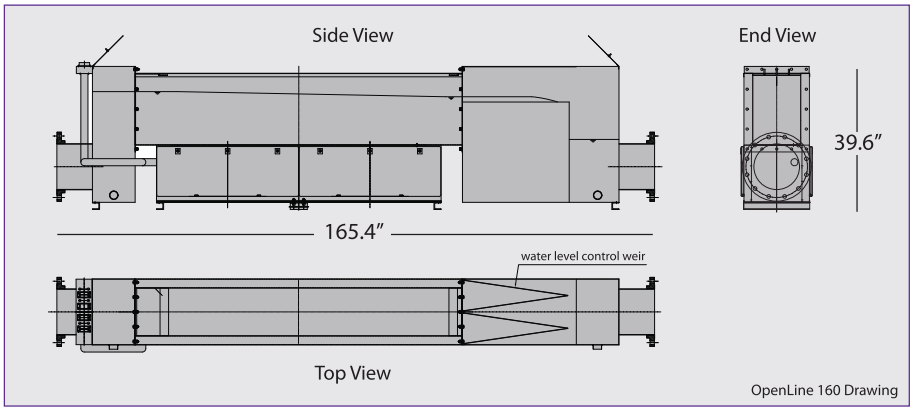

OpenLine 160 Drawing

A HALMA COMPANY

Celebrating 80 Years of Pure Performance from the UV Technology Pioneers

AQUIONICS UV That Works!

1455 Jamike Avenue, Suite 100 | Erlanger, KY 41018 | P 859.341.0710 | T 800.925.0440 | F 859.341.0350 | WWW.AQUIONICS.COM

Aquionics UV That Works!™ and InLine™ are trademarks of Aquionics.
©2012 Aquionics.

Table 4-1
Power Teton-County Water & Sewer District Preliminary Engineering Report
Construction Cost Estimate
Treatment Alternative T-2: Upgrade Water Treatment Plant

Item	Quantity	Units	Unit Cost	Cost	Salvage Value[1]
Mobilization	5	%		$63,289	$0
Remove and Replace 12-inch DI Raw Water Pipe and Fittings	130	LF	$225	$29,250	$14,625
Remove and Replace Copper Piping and Fittings	325	LF	$160	$52,000	$26,000
Remove and Replace DI Pipe and Fittings	195	LF	$140	$27,300	$13,650
Remove and Replace Raw Water Pumps	2	EA	$9,000	$18,000	$0
Remove and Replace Raw Water Pumps	2	EA	$9,000	$18,000	$0
Remove and Replace Raw Water Pumps	1	EA	$9,000	$9,000	$0
Remove and Replace Finished Water Piping	2	EA	$9,000	$18,000	$0
Remove and Replace Clear Well Tank	1	LS	$120,000	$120,000	$60,000
Replace Diversion Dam	1	EA	$30,000	$30,000	$22,500
Demo Existing Pond Liner	12,000	SF	$1	$12,000	$0
Demo Existing Rapid Filtration Treatment Trains	2	EA	$10,000	$20,000	$0
Demo Existing Carbon Tank	1	LS	$10,000	$10,000	$0
Install New Concrete Sediment Pond Liner	1,300	SY	$100	$130,000	$65,000
Install New Concrete Sediment Pond Inlet/Outlet Structures	2	EA	$3,500	$7,000	$3,500
Install New Ultrafiltration Membrane System	2	EA	$150,000	$300,000	$75,000
Upgrade Backwash Water Ponds	1	LS	$250,000	$250,000	$125,000
Install new SCADA/PLC System	1	LS	$50,000	$50,000	$12,500
Connect to Existing 6-inch PVC Transmission Main	1	EA	$1,500	$1,500	$750
New UV Disinfection System	1	LS	$140,000	$140,000	$105,000
Layout and Construction Staking	1	LS	$10,000	$10,000	$0
Exploratory Excavation	8	HR	$150	$1,200	$0
Construction Materials Testing	1	%		$12,533	$0
Construction Estimates				**$1,329,100**	**$523,500**
AIS Compliance-Materials and Project Management			5%	$66,455	
Contingency			10%	$139,556	
Administrative, Engineering, and Legal			25%	$383,778	
Total (rounded to the nearest $1000)				**$1,919,000**	**$503,000**

1. Salvage Value PW Factor @ 0.2% for 20 years

Table 4-2 Power Teton-County Water & Sewer District Preliminary Engineering Report Annual Operations and Maintenance Costs Treatment Alternative T-2: Upgrade Water Treatment Plant				
Description	**Quantity**	**Unit**	**Unit Cost**	**Cost**
Accounting & Auditing	1	LS	$700	$700
Bank Service Charges	1	LS	$0	$0
Chemicals	1	LS	$6,128	$6,128
Dues/Certifications/Training	1	LS	$425	$425
Easement & Water Assessment	1	LS	$227	$227
Fees (Permits, Service, Recording)	1	LS	$774	$774
Insurance & Bonding	1	LS	$2,195	$2,195
Payroll Expense	1	LS	$11,692	$11,692
Postage & Office	1	LS	$980	$980
Professional Fees	1	LS	$0	$0
Repairs	1	LS	$5,618	$5,618
Short Lived Asset Reserves	1	LS	$3,300	$3,300
Supplies	1	LS	$1,642	$1,642
Testing Water	1	LS	$1,994	$1,994
Truck Expenses	1	LS	$752	$752
Utilities	1	LS	$8,919	$8,919
Total Annual Operating and Maintenance Costs (rounded to the nearest $100)				**$45,300**
Real Interest Rate	0.2%			
Present Worth for 20 Years @ 0.2% (rounded to the nearest $100)				**$887,300**

1. Expense adjusted to reflect O&M cost specific to Alternative

Table 2-14 Operations and Maintenance Budget					
Operating Expenses	**FY 2013**	**FY 2014**	**FY 2015**	**FY 2016**	**Average Operating Expenses**
Accounting & Auditing	$625	$660	$675	$700	$665
Bank Service Charges	---	$19	---	---	$19
Chemicals	$5,018	$6,015	$6,741	$6,128	$5,976
Depreciation	$98,189	$98,303	$100,607	$100,607	$99,427
Dues/Certifications/Training	$425	$425	$425	$425	$425
Easement & Water Assessment	$183	$196	$211	$227	$204
Fees (Permits, Service, Recording)	$756	$920	$768	$774	$805
Insurance & Bonding	$1,779	$1,813	$1,846	$1,995	$1,858
Payroll Expense	$10,451	$11,285	$11,232	$11,692	$11,165
Postage & Office	$1,534	$655	$834	$980	$1,001
Professional Fees	$249	$9,026	$1,000	---	$3,425
Repairs	$1,514	$1,539	$8,980	$7,490	$4,881
Supplies	$57	$1,296	$2,672	$1,642	$1,417
Testing Water	$1,938	$1,849	$2,076	$1,994	$1,964
Truck Expenses	$1,380	$1,282	$1,235	$752	$1,162
Utilities	$7,212	$9,033	$8,343	$8,919	$8,377
Total Operating Expenses	**$131,310**	**$144,316**	**$147,645**	**$144,325**	**$141,899**

Short - Lived Asset Reserves Alternative T-2: Upgrade Water Treatment Plant			
Asset	**Projected Repair/Replacement[1]**	**Cost**	**Reserve**
Pumps (5)	2030	$32,500.00	$3,250.00
Total Short-Lived Asset Budget (rounded to nearest $100)			**$3,300.00**

1. Short-lived assets addressed through planning period. Projected replacement at or longer than 20 years are not included in

APPENDIX C

(Revised November 2017)

DISCOUNT RATES FOR COST-EFFECTIVENESS, LEASE PURCHASE, AND RELATED ANALYSES

Effective Dates. This appendix is updated annually. This version of the appendix is valid for calendar year 2018. A copy of the updated appendix can be obtained in electronic form through the OMB home page at https://www.whitehouse.gov/wp-content/uploads/2017/11/Appendix-C.pdf. The text of the Circular is found at https://www.whitehouse.gov/sites/whitehouse.gov/files/omb/circulars/A94/a094.pdf, and a table of past years' rates is located at https://www.whitehouse.gov/wp-content/uploads/2017/11/DISCHIST-2018-1.pdf. Updates of the appendix are also available upon request from OMB's Office of Economic Policy (202-395-3316).

Nominal Discount Rates. A forecast of nominal or market interest rates for calendar year 2018 based on the economic assumptions for the 2019 Budget is presented below. These nominal rates are to be used for discounting nominal flows, which are often encountered in lease-purchase analysis.

Nominal Interest Rates on Treasury Notes and Bonds of Specified Maturities (in percent)

3-Year	5-Year	7-Year	10-Year	20-Year	30-Year
1.0	1.3	1.6	1.8	2.2	2.6

Real Discount Rates. A forecast of real interest rates from which the inflation premium has been removed and based on the economic assumptions from the 2019 Budget is presented below. These real rates are to be used for discounting constant-dollar flows, as is often required in cost-effectiveness analysis.

Real Interest Rates on Treasury Notes and Bonds of Specified Maturities (in percent)

3-Year	5-Year	7-Year	10-Year	20-Year	30-Year
-0.8	-0.6	-0.3	-0.1	0.2	0.6

Analyses of programs with terms different from those presented above may use a linear interpolation. For example, a four-year project can be evaluated with a rate equal to the average of the three-year and five-year rates. Programs with durations longer than 30 years may use the 30-year interest rate.

APPENDIX 4 - B

Alternative T-3 Supporting Documents

Table 4-X
Power Teton - County Water & Sewer District Preliminary Engineering Report
Construction Cost Estimate
Treatment Alternative T-3: Connect to the NCMRWA's Water System

Item	Quantity	Units	Unit Cost	Cost	Salvage Value[1]
Mobilization	5	%		$227,640.00	$0
Connect to NCRWA Main	1	LS	$15,000	$15,000	$0
Transmission Main and Fittings	48,000	LF	$80	$3,840,000	$1,920,000
Booster Pump Station and Surge Tank	1	EA	$100,000	$100,000	$25,000
Jack & Bore Under MT Highway 221	1	LS	$75,000	$75,000	$0
Rural Roads Crossings	6	LS	$50,000	$300,000	$0
Connect to District Water Main	1	LS	$1,500	$1,500	$0
New Bulk Water Station	1	LS	$140,000	$140,000	$105,000
New Water Sampling Station	1	EA	$25,000	$25,000	$12,500
Layout and Construction Staking	1	LS	$10,000	$10,000	$0
Exploratory Excavation	8	HR	$150	$1,200	$0
Construction Materials Testing	1	%		$45,100	$0
Construction Estimate				**$4,780,440**	**$2,062,500**
AIS Compliance-Materials and Project Management			5%	$239,022	
Contingency			15%	$752,919.30	
Administrative, Legal, & Engineering			25%	$1,443,095	
Total (rounded to the nearest thousand)				**$7,215,000**	**$1,982,000**

1. Salvage Value PW Factor @ 0.2% for 20 years

Table 4-X Power Teton-County Water & Sewer District Preliminary Engineering Report Annual Operations and Maintenance Costs Treatment Alternative T-3: Connect to the NCMRWA's Water System				
Description	**Quantity**	**Unit**	**Unit Cost**	**Cost**
Accounting & Auditing	1	LS	$700	$700
Bank Service Charges	1	LS	$0	$0
Chemicals	1	LS	$4,596	$4,596
Dues/Certifications/Training	1	LS	$425	$425
Easement & Water Assessment	1	LS	$454	$454
Fees (Permits, Service, Recording)	1	LS	$96,500	$96,500
Insurance & Bonding	1	LS	$998	$998
Payroll Expense	1	LS	$5,846	$5,846
Postage & Office	1	LS	$980	$980
Professional Fees	1	LS	$0	$0
Repairs	1	LS	$3,745	$3,745
Short Lived Asset Reserves	1	LS	$1,400	$1,400
Supplies	1	LS	$1,642	$1,642
Testing Water	1	LS	$1,994	$1,994
Truck Expenses	1	LS	$752	$752
Utilities	1	LS	$10,000	$10,000
Total Annual Operating and Maintenance Costs (rounded to the nearest $100)				**$130,000**
Real Interest Rate	0.2%			
Present Worth for 20 Years @ 0.2% (rounded to the nearest $100)				**$2,546,200**

1. Expense adjusted to reflect O&M cost specific to Alternative

Table 2-14 Operations and Maintenance Budget					
Operating Expenses	**FY 2013**	**FY 2014**	**FY 2015**	**FY 2016**	**Average Operating Expenses**
Accounting & Auditing	$625	$660	$675	$700	$665
Bank Service Charges	---	$19	---	---	$19
Chemicals	$5,018	$6,015	$6,741	$6,128	$5,976
Depreciation	$98,189	$98,303	$100,607	$100,607	$99,427
Dues/Certifications/Training	$425	$425	$425	$425	$425
Easement & Water Assessment	$183	$196	$211	$227	$204
Fees (Permits, Service, Recording)	$756	$920	$768	$774	$805
Insurance & Bonding	$1,779	$1,813	$1,846	$1,995	$1,858
Payroll Expense	$10,451	$11,285	$11,232	$11,692	$11,165
Postage & Office	$1,534	$655	$834	$980	$1,001
Professional Fees	$249	$9,026	$1,000	---	$3,425
Repairs	$1,514	$1,539	$8,980	$7,490	$4,881
Supplies	$57	$1,296	$2,672	$1,642	$1,417
Testing Water	$1,938	$1,849	$2,076	$1,994	$1,964
Truck Expenses	$1,380	$1,282	$1,235	$752	$1,162
Utilities	$7,212	$9,033	$8,343	$8,919	$8,377
Total Operating Expenses	**$131,310**	**$144,316**	**$147,645**	**$144,325**	**$141,899**

Short - Lived Asset Reserves Treatment Alternative T-3: Connect to the NCMRWA's Water System			
Asset	**Projected Repair/Replacement[1]**	**Replacement Cost**	**Annual Reserve**
Booster Pumps	2030	$13,000.00	$1,300.00
Total Short-Lived Asset Budget (rounded to nearest $100)			**$1,300.00**

1. Short-lived assets addressed through planning period. Projected replacement at or longer than 20 years are not included in the total budget.

Brady NCMRWA rate 3.25/1000gal

Assuming the city's average day flow rate is 75,000 gpd

27375000 gal/year
$88,968.75 $/year

$96,468.75

APPENDIX C

(Revised November 2017)

DISCOUNT RATES FOR COST-EFFECTIVENESS, LEASE PURCHASE, AND RELATED ANALYSES

Effective Dates. This appendix is updated annually. This version of the appendix is valid for calendar year 2018. A copy of the updated appendix can be obtained in electronic form through the OMB home page at https://www.whitehouse.gov/wp-content/uploads/2017/11/Appendix-C.pdf. The text of the Circular is found at https://www.whitehouse.gov/sites/whitehouse.gov/files/omb/circulars/A94/a094.pdf, and a table of past years' rates is located at https://www.whitehouse.gov/wp-content/uploads/2017/11/DISCHIST-2018-1.pdf. Updates of the appendix are also available upon request from OMB's Office of Economic Policy (202-395-3316).

Nominal Discount Rates. A forecast of nominal or market interest rates for calendar year 2018 based on the economic assumptions for the 2019 Budget is presented below. These nominal rates are to be used for discounting nominal flows, which are often encountered in lease-purchase analysis.

Nominal Interest Rates on Treasury Notes and Bonds of Specified Maturities (in percent)

3-Year	5-Year	7-Year	10-Year	20-Year	30-Year
1.0	1.3	1.6	1.8	2.2	2.6

Real Discount Rates. A forecast of real interest rates from which the inflation premium has been removed and based on the economic assumptions from the 2019 Budget is presented below. These real rates are to be used for discounting constant-dollar flows, as is often required in cost-effectiveness analysis.

Real Interest Rates on Treasury Notes and Bonds of Specified Maturities (in percent)

3-Year	5-Year	7-Year	10-Year	20-Year	30-Year
-0.8	-0.6	-0.3	-0.1	0.2	0.6

Analyses of programs with terms different from those presented above may use a linear interpolation. For example, a four-year project can be evaluated with a rate equal to the average of the three-year and five-year rates. Programs with durations longer than 30 years may use the 30-year interest rate.

APPENDIX 4 - C

Alternative T-4 Supporting Documents

City of
Great Falls
MONTANA

Water Treatment Plant

At the time the City of Great Falls (the City) was founded in 1884, water was delivered by horse and wagon to front porch water barrels. In 1888 Mr. Ira Myers conceived the idea of a public water system, but public subscription to raise the $35,000 for the construction of a water plant and distribution system failed. In 1889 the governing body of the City granted a 20-year franchise to the Great Falls Water Company, which was successful in selling $150,000 in bonds for the construction of the project. The original system consisted of one steam driven pump capable of 2 million gallons per day and 9 miles of pipe. In 1898 a special City election passed a $375,000 bond issuance, with which the City purchased the water system from the Great Falls Water Company.

The Missouri River has remained the supply source for the water utility since 1889. Previous to 1917, river water was settled in open ponds then pumped directly into the distribution system by steam driven pumps. In 1910 electric motor driven centrifugal pumps with an 8-million gallon a day capacity were

installed, and by 1917 a newly constructed filtration facility was placed into operation.

Today, raw water from the Missouri River receives modern treatment methods of coagulation, flocculation, sedimentation, filtration and disinfection before it is pumped into over 310 miles of water distribution lines. There are seven storage facilities in the distribution system with a total capacity of over 12 million gallons. (See the Supporting Documents below for a flowchart of the water treatment process)

The onsite Water Testing Lab routinely tests for contaminates in the water, as required by Federal and State laws. A Water Quality - Consumer Confidence Report is created annually from the previous year's analysis data and is distributed to the water system users.

If you would like additional information regarding the Water Plant Operation, or wish to schedule a tour of the plant, please contact Wayne Lovelis at 727-1325.

Click any thumbnail image to view a slideshow

Supporting Documents

Water Treatment Plant Process (25 KB)

Public Works

- About Public Works
- Environmental Division
- Engineering
- Operations
- Road Closures
- Surplus Vehicles
- Utility Systems
  - Permits
  - Tapping and Connection Fees
  - Water Billing
  - Water Distribution
  - Sewer Collection
  - Storm Drain
  - Utility Plants
    - Water Treatment Plant
    - Water Testing Lab
    - Commonly Asked Questions about Water Treatment
    - Water Quality - Consumer Confidence Reports

Wastewater Treatment

Contact Information

Public Works Complex

Administration
1005 25th Avenue NE
Great Falls, MT 59404
(406) 727-8390

Engineering / Operations
1025 25th Avenue NE
Great Falls, MT 59404
(406) 771-1258 / (406) 771-1401

View Full Contact Details

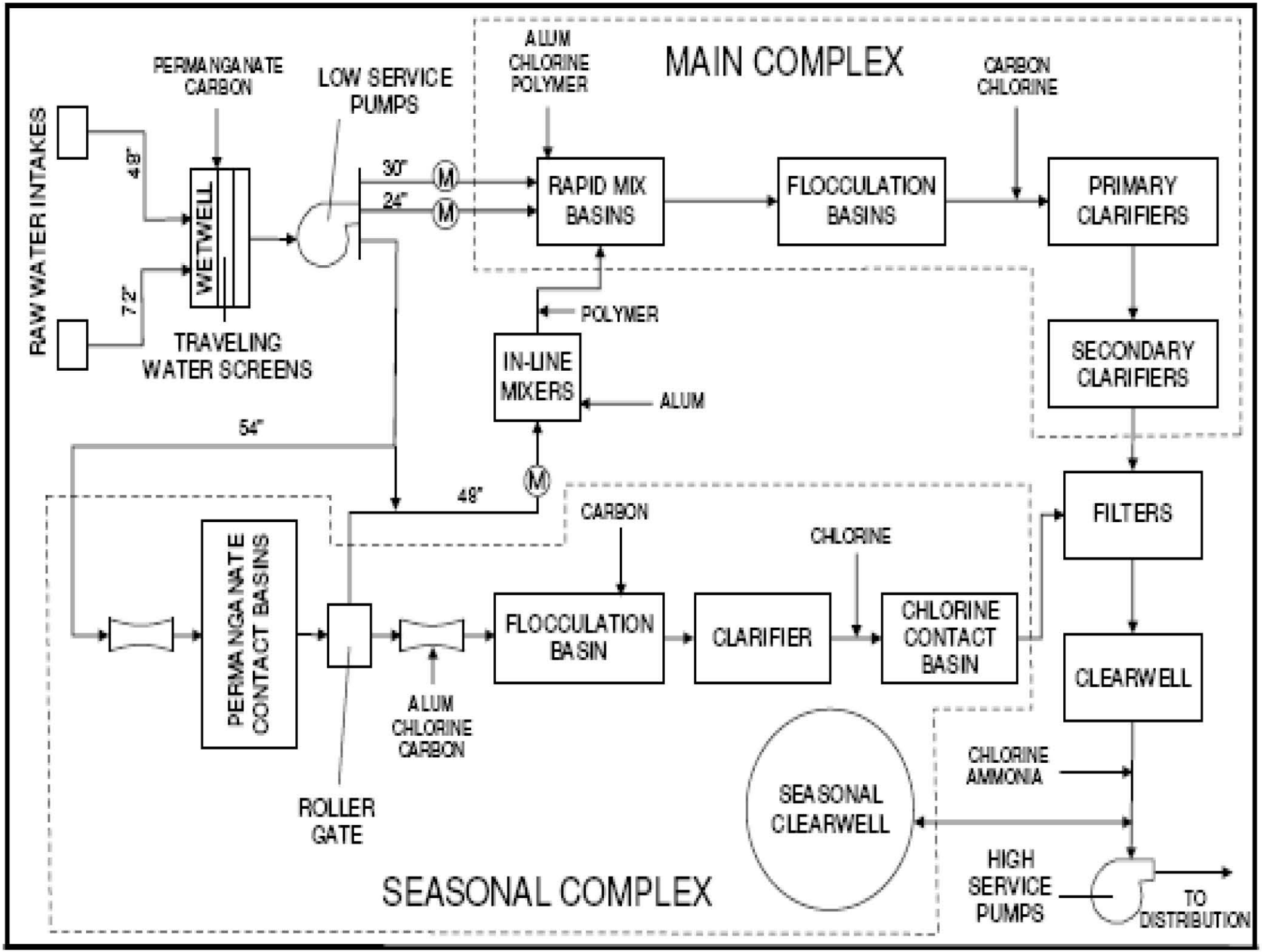
MAIN COMPLEX
RAW WATER INTAKES
48"
72"
PERMANGANATE
CARBON
WETWELL
TRAVELING
WATER SCREENS
LOW SERVICE
PUMPS
30"
24"
M
M
ALUM
CHLORINE
POLYMER
RAPID MIX
BASINS
FLOCCULATION
BASINS
CARBON
CHLORINE
PRIMARY
CLARIFIERS
POLYMER
IN-LINE
MIXERS
ALUM
SECONDARY
CLARIFIERS
54"
48"
M
FILTERS
CARBON
CHLORINE
PERMANGANATE
CONTACT BASINS
FLOCCULATION
BASIN
CLARIFIER
CHLORINE
CONTACT
BASIN
CLEARWELL
ALUM
CHLORINE
CARBON
ROLLER
GATE
SEASONAL
CLEARWELL
CHLORINE
AMMONIA
HIGH
SERVICE
PUMPS
TO
DISTRIBUTION
SEASONAL COMPLEX

Table 4-X
Power Teton - County Water & Sewer District Preliminary Engineering Report
Construction Cost Estimate
Treatment Alternative T-4: Connect to the City of Great Falls Water System

Item	Quantity	Units	Unit Cost	Cost	Salvage Value[1]
Mobilization	5	%		$540,740.00	$0
Connect to City of Great Falls Main	1	LS	$15,000	$15,000	$0
Transmission Main and Fittings	123,000	LF	$80	$9,840,000	$4,920,000
Booster Pump Stations	2	LS	$100,000	$200,000	$50,000
Jack and Bore Under Interstate-15	1	LS	$100,000	$100,000	$0
Jack and Bore Under My HWY 89	1	EA	$75,000	$75,000	$0
Rural Roads Crossings	6	LS	$50,000	$300,000	$0
Connect to District Water Main	1	LS	$1,500	$1,500	$0
New Bulk Water Station	1	LS	$140,000	$140,000	$105,000
New Water Sampling Station	1	EA	$25,000	$25,000	$12,500
Layout and Construction Staking	1	LS	$10,000	$10,000	$0
Exploratory Excavation	8	HR	$150	$1,200	$0
Construction Materials Testing	1	%		$107,100	$0
			Construction Estimate	**$11,355,540**	**$5,087,500**
AIS Compliance-Materials and Project Management			5%	$567,777.00	
Contingency			15%	$1,788,497.55	
Administrative, Legal, & Engineering			25%	$3,427,954	
Total (rounded to the nearest thousand)				**$17,140,000**	**$4,889,000**

1. Salvage Value PW Factor @ 0.2% for 20 years

Table 4-X Power Teton-County Water & Sewer District Preliminary Engineering Report Annual Operations and Maintenance Costs Treatment Alternative T-4: Connect to the City of Great Falls Water System				
Description	**Quantity**	**Unit**	**Unit Cost**	**Cost**
Accounting & Auditing	1	LS	$700	$700
Bank Service Charges	1	LS	$0	$0
Chemicals	1	LS	$4,596	$4,596
Dues/Certifications/Training	1	LS	$425	$425
Easement & Water Assessment	1	LS	$454	$454
Fees (Permits, Service, Recording)	1	LS	$97,500	$97,500
Insurance & Bonding	1	LS	$998	$998
Payroll Expense	1	LS	$5,846	$5,846
Postage & Office	1	LS	$980	$980
Professional Fees	1	LS	$0	$0
Repairs	1	LS	$3,745	$3,745
Short Lived Asset Reserves	1	LS	$1,400	$1,400
Supplies	1	LS	$1,642	$1,642
Testing Water	1	LS	$1,994	$1,994
Truck Expenses	1	LS	$752	$752
Utilities	1	LS	$22,298	$22,298
Total Annual Operating and Maintenance Costs (rounded to th				**$143,300**
Real Interest Rate	0.2%			
Present Worth for 20 Years @ 0.2% (rounded to the nearest $100)				**$2,806,700**

1. Expense adjusted to reflect O&M cost specific to Alternative

Table 2-14 Operations and Maintenance Budget					
Operating Expenses	**FY 2013**	**FY 2014**	**FY 2015**	**FY 2016**	**Average Operating Expenses**
Accounting & Auditing	$625	$660	$675	$700	$665
Bank Service Charges	---	$19	---	---	$19
Chemicals	$5,018	$6,015	$6,741	$6,128	$5,976
Depreciation	$98,189	$98,303	$100,607	$100,607	$99,427
Dues/Certifications/Training	$425	$425	$425	$425	$425
Easement & Water Assessment	$183	$196	$211	$227	$204
Fees (Permits, Service, Recording)	$756	$920	$768	$774	$805
Insurance & Bonding	$1,779	$1,813	$1,846	$1,995	$1,858
Payroll Expense	$10,451	$11,285	$11,232	$11,692	$11,165
Postage & Office	$1,534	$655	$834	$980	$1,001
Professional Fees	$249	$9,026	$1,000	---	$3,425
Repairs	$1,514	$1,539	$8,980	$7,490	$4,881
Supplies	$57	$1,296	$2,672	$1,642	$1,417
Testing Water	$1,938	$1,849	$2,076	$1,994	$1,964
Truck Expenses	$1,380	$1,282	$1,235	$752	$1,162
Utilities	$7,212	$9,033	$8,343	$8,919	$8,377
Total Operating Expenses	**$131,310**	**$144,316**	**$147,645**	**$144,325**	**$141,899**

Short - Lived Asset Reserves Treatment Alternative T-4: Connect to the City of Great Falls Water System			
Asset	**Projected Repair/Replacement[1]**	**Replacement Cost**	**Annual Reserve**
Booster Pumps	2030	$14,000.00	$1,400.00
Total Short-Lived Asset Budget (rounded to nearest $100)			**$1,400.00**

1. Short-lived assets addressed through planning period. Projected replacement at or longer than 20 years are not included in the total budget.

City of GF rate	$1.47/100 CF	<300 CF
	$2.46/100CF	>300 CF

Assuming the city's average day flow rate is 75,000 gpd

	10026.04097	cf/day
	3659504.954	cf/year
$	90,024	$/year

APPENDIX C

(Revised November 2017)

DISCOUNT RATES FOR COST-EFFECTIVENESS, LEASE PURCHASE, AND RELATED ANALYSES

Effective Dates. This appendix is updated annually. This version of the appendix is valid for calendar year 2018. A copy of the updated appendix can be obtained in electronic form through the OMB home page at https://www.whitehouse.gov/wp-content/uploads/2017/11/Appendix-C.pdf. The text of the Circular is found at https://www.whitehouse.gov/sites/whitehouse.gov/files/omb/circulars/A94/a094.pdf, and a table of past years' rates is located at https://www.whitehouse.gov/wp-content/uploads/2017/11/DISCHIST-2018-1.pdf. Updates of the appendix are also available upon request from OMB's Office of Economic Policy (202-395-3316).

Nominal Discount Rates. A forecast of nominal or market interest rates for calendar year 2018 based on the economic assumptions for the 2019 Budget is presented below. These nominal rates are to be used for discounting nominal flows, which are often encountered in lease-purchase analysis.

Nominal Interest Rates on Treasury Notes and Bonds of Specified Maturities (in percent)

3-Year	5-Year	7-Year	10-Year	20-Year	30-Year
1.0	1.3	1.6	1.8	2.2	2.6

Real Discount Rates. A forecast of real interest rates from which the inflation premium has been removed and based on the economic assumptions from the 2019 Budget is presented below. These real rates are to be used for discounting constant-dollar flows, as is often required in cost-effectiveness analysis.

Real Interest Rates on Treasury Notes and Bonds of Specified Maturities (in percent)

3-Year	5-Year	7-Year	10-Year	20-Year	30-Year
-0.8	-0.6	-0.3	-0.1	0.2	0.6

Analyses of programs with terms different from those presented above may use a linear interpolation. For example, a four-year project can be evaluated with a rate equal to the average of the three-year and five-year rates. Programs with durations longer than 30 years may use the 30-year interest rate.

APPENDIX 4 - D

Alternative T-7 Supporting Documents

Ground Water Information Center | MBMG Data Center
Montana Bureau of Mines and Geology
Montana Tech of The University of Montana
1300 West Park Street - Natural Resources Building Room 329
Butte Montana 59701-8997
Ph: (406) 496-4336 Fx: (406) 496-4343

You are currently signed in. | 11/27/2017
Sign Out

| Home | Well Data | Reports | Data Coop | DrillerWeb | DNRC | Help! |

Menus: | Main | SWL | GWCP | Projects | Coal | Coal Quality | Geothermal

GWIC Data > Well Construction Data > Township: 22N Range: 01W Sec: 6, 5, 4, 3, 2, 7, 8, 9, 10, 11

The following data were returned from the GWIC databases for the area you requested. For a more detailed description of the data view the GWIC Metadata report. If you notice data entry errors or have questions please let us know by sending us an Email at **GWIC@mtech.edu**. If you wish to view a one page report for a particular site, click the hyperlinked **Gwic Id** for that well. Scroll to the right of your screen to view all the data. All data displayed on the screen may not show up when printed.

Retrieval Statistics*

Field	Max	Min	Avg
Total Depth (ft)	100.00	12.00	26.90
Static Water Level (ft)	28.00	2.29	13.72
Yield (gpm)	100.00	1.50	15.45

* These statistics do not take any geographic, topographic, or geologic factors into consideration. Negative swl values are reported for water levels that are above land surface.

Did you know about...

Other GWIC data

GWIC has 10 water quality sample(s) for this area.
GWIC has 31 field visit(s) for this request area.
GWIC has 4 water level(s) for this request area.

Thanks, Just take me back to the menu.

Other MBMG data

MBMG has 368 publications available for TETON county.
MBMG has 1 abandoned mine record(s) for this request area.

Gwic Id	PDF	DNRC WR	Site Name	Twn	Rng	Sec	Q Sec	Ver?	Type	Td	Swl	Pwl	Rwl	Yield	Test	Date	Use
124189			CLARK VERNE	22N	01W	2		No	WELL	100.00				1.50	BAILER	5/25/1949	STOCKWATER
76498			DAVIS LYLE E. AND EMMA M.	22N	01W	3		No	WELL	14.00	8.00			10.00	OTHER	9/1/1936	DOMESTIC

76497			DAVIS LYLE E. AND EMMA M. *WELL 1	22N	01W	3		No	WELL	18.00	8.00			10.00	OTHER	9/1/1936	DOMESTIC
76494			ODAY JOHN	22N	01W	3	BBBB	Yes	WELL	24.00	24.00			30.00	PUMP	7/20/1956	DOMESTIC
76495			ODAY JOHN *WELL 2	22N	01W	3	BBBC	Yes	WELL	12.00				30.00	OTHER	3/22/1962	DOMESTIC
76496			JOHNSON AMANDA *WELL 1	22N	01W	3	C	No	WELL	35.00	25.00			100.00	OTHER	6/1/1948	DOMESTIC
76499			JOHNSON AMANDA *WELL 2	22N	01W	3	C	No	WELL	35.00	25.00				OTHER	6/1/1948	DOMESTIC
154133			CONTWAY ROSS AND TINA	22N	01W	3	CBB	No	WELL	25.00	6.00		6.00	30.00	AIR	7/7/1993	DOMESTIC
76500		C062706-00	BAKER WILLIAM	22N	01W	3	CCC	Yes	WELL	26.00	20.00	21.00		12.00	PUMP	7/15/1986	DOMESTIC
76502			STELZER RICHARD AND SUSAN	22N	01W	4	BBCA	Yes	WELL	28.00	28.00			20.00	PUMP	1/1/1942	DOMESTIC
76501			STELZER RICHARD AND SUSAN	22N	01W	4	BBCB	Yes	WELL	27.00				21.00	BAILER	3/8/1948	DOMESTIC
161793			POWER WATER DISTRICT/WALKER GENE	22N	01W	4	DADB	Yes	WELL	15.60	11.60				OTHER		
6162			GETTEL ARNOLD R. *WELL 2	22N	01W	4	DDCD	Yes	WELL	19.00	16.14			20.00	OTHER	4/1/1958	DOMESTIC
76504			BIVENS J.C.	22N	01W	5		No	WELL	45.00				2.00	BAILER	4/16/1947	DOMESTIC
140852			COLLEY ROBERT	22N	01W	5	ABAB	Yes	WELL	12.10	2.29			5.00	OTHER		
231751			BERG ERNEST	22N	01W	5	BABB	Yes	WELL	20.00							DOMESTIC
140851			MBMG *TETON (NO NAME)	22N	01W	5	BABB	Yes	WELL	14.20	4.95	6.50		5.00	OTHER		

76505		GUNDERSON MARTIN	22N	01W	5	BABD	No	WELL	20.00	8.00		15.00	OTHER	3/1/1951	DOMESTIC
76506		SCHAEFER CLIFFORD L.	22N	01W	5	BBBA	No	WELL	18.00			10.00	OTHER	1/1/1968	DOMESTIC
76507		HINCKLEY DEAN S. AND ALVINA	22N	01W	5	CCCC	Yes	WELL	60.00			5.00	OTHER	1/1/1937	DOMESTIC
140850		RIPHENBURG REED	22N	01W	5	DADA	Yes	WELL					OTHER		
140853		INGEBRIGTSON AGNES	22N	01W	6	BCBB	Yes	WELL				5.00	OTHER	7/17/1981	
140854		POPPELTON ROBERT	22N	01W	7	AADB	Yes	WELL	30.00	6.00		5.00	OTHER		
76509		BUNKER EUGENE B.	22N	01W	7	AADC	No	WELL	35.00	25.00		5.00	OTHER	6/1/1961	STOCKWATER
76508		BUNKER EUGENE B. *WELL 1	22N	01W	7	AADD	No	WELL	40.00	25.00		5.00	OTHER	6/1/1961	STOCKWATER
140855		KNIGHT JACK	22N	01W	7	BCCC	Yes	WELL				6.50	OTHER		
76510		MCDERMOTT CHARLES G.	22N	01W	7	C	No	WELL		12.00			OTHER	1/1/1916	DOMESTIC
140856		ROWLEY FRED	22N	01W	7	DACD	Yes	WELL	12.00	2.50		5.00	OTHER		
277733		COWGILL, JACOB	22N	01W	8		No	WELL	25.00	12.00		15.00	PUMP	5/2/2014	IRRIGATION
277733		COWGILL, JACOB	22N	01W	8		No	WELL	25.00	12.00		15.00	AIR	5/2/2014	IRRIGATION
76511		SCHULTZ WILLIAM H *WELL 1	22N	01W	8	BBA	No	WELL	22.00	15.00		30.00	OTHER	1/1/1937	DOMESTIC
76512		SCHULTZ WILLIAM H *WELL 2	22N	01W	8	BBA	Yes	WELL	13.00	4.88		30.00	OTHER	1/1/1937	DOMESTIC
140857		JOHNSON TOM	22N	01W	8	DAAD	Yes	WELL				5.00	OTHER		
140858		VERNON WILL	22N	01W	9	ABBB	Yes	WELL	16.00	8.98		10.00	OTHER		DOMESTIC

76513		C022254-00	SCHLINGEN JOHN	22N	01W	10	BBBA	Yes	WELL	30.00	19.00	27.00	6.00	PUMP	10/24/1978	DOMESTIC
140859			YOUNG STEVE AND SALLY	22N	01W	11	CDCC	Yes	WELL	18.00			10.00	OTHER		DOMESTIC

End of Report.
36 record(s) listed.

Items of Note:

[1]This report is restricted to site types of **WELL, BOREHOLE, SPRING, COAL BED METHANE WELL, PETWELL, PIEZOMETER**.

[2]A single well record (a distinct GWIC Id) may be represented by more than one line in this report if more than one performance test was conducted on the well at the time of drilling.

Explanation of Columns:

GWIC Id = Key field for the GWIC database. Links to one page reports.
PDF = Are scanned documents available through the Document Manager?

- = Yes, click on the icon to download the PDF file.
- = No, well was submitted electronically. No paper record exists.
- = No, record does have a known well log but it is not scanned yet.
- = No, record may or may not have a document to scan. Metadata is unclear.
- = No, record was created from a source other than a well log. No paper record exists.

DNRC WR = Water right number assigned to this site by Department of Natural Resources and Conservation.
Site Name = Current owner name assigned to GWIC record.
Location = Location of site in Montana township, range, section, and quarter-section coordinates.
Ver? = Has this location been verified by field staff?
Type = Type of site assigned to GWIC record.
Td = **T**otal **d**epth of well in feet below ground.
Swl = **S**tatic **w**ater **l**evel in feet above/below ground - Negative values are reported for water levels that are above land surface.
Pwl = **P**umping **w**ater **l**evel in feet below ground.
Rwl = **R**ecovery **w**ater **l**evel in feet below ground.
Yield = Yield in gallons per minute.
Test = Type of performance test reported.
Date = Completion date of well/borehole.
Use = Reported use of water.

Disclaimer:
The preceding materials represent the contents of the GWIC databases at the Montana Bureau of Mines and Geology at the time and date of the retrieval. The information is considered unpublished and is subject to correction and review on a daily basis. The Bureau warrants the accurate transmission of the data to the original end user at the time and date of the retrieval [11/27/2017 4:23:24 PM]. Retransmission of the data to other users is discouraged and the Bureau claims no responsibility if the material is retransmitted. There may be wells in the request area that are not recorded at the Information Center.

Ground Water Information Center Online © 1998 - 2017
Contact Us | **Privacy Statement**

Ground Water Information Center | **MBMG Data Center**
Montana Bureau of Mines and Geology
Montana Tech of The University of Montana
1300 West Park Street - Natural Resources Building Room 329
Butte Montana 59701-8997
Ph: (406) 496-4336 Fx: (406) 496-4343

You are currently signed in. | 11/27/2017
Sign Out

| Home | Well Data | Reports | Data Coop | DrillerWeb | DNRC | Help! |

Menus: | Main | SWL | GWCP | Projects | Coal | Coal Quality | Geothermal

GWIC Data > Well Construction Data > Township: 23N Range: 01W Sec: 30, 29, 28, 27, 26, 31, 33, 34, 35

The following data were returned from the GWIC databases for the area you requested. For a more detailed description of the data view the GWIC Metadata report. If you notice data entry errors or have questions please let us know by sending us an Email at **GWIC@mtech.edu**. If you wish to view a one page report for a particular site, click the hyperlinked **Gwic Id** for that well. Scroll to the right of your screen to view all the data. All data displayed on the screen may not show up when printed.

Retrieval Statistics*

Field	Max	Min	Avg
Total Depth (ft)	84.00	13.00	35.86
Static Water Level (ft)	80.00	5.90	22.91
Yield (gpm)	20.00	5.00	10.20

* These statistics do not take any geographic, topographic, or geologic factors into consideration. Negative swl values are reported for water levels that are above land surface.

Did you know about...

Other GWIC data

GWIC has 6 water quality sample(s) for this area.
GWIC has 10 field visit(s) for this request area.
GWIC has 1 water level(s) for this request area.

Thanks, Just take me back to the menu.

Other MBMG data

MBMG has 368 publications available for TETON county.
MBMG has 0 abandoned mine record(s) for this request area.

Gwic Id	PDF	DNRC WR	Site Name	Twn	Rng	Sec	Q Sec	Ver?	Type	Td	Swl	Pwl	Rwl	Yield	Test	Date	Use
77392			DAHLMAN ARTHUR W.	23N	01W	26		No	WELL	31.00	17.00			5.00	OTHER	9/30/1948	DOMESTIC

77394			FITZGERALD DANA	23N	01W	26	ADD	No	WELL	84.00	80.00		16.00	OTHER	10/1/1954	DOMESTIC
77395		C62759-00	BAKKE EMIL	23N	01W	26	DDDD	Yes	WELL	65.00	20.00	26.00	20.00	PUMP	1/6/1987	DOMESTIC
222562			BAKKE, EMIL	23N	01W	26	DDDD	Yes	WELL	43.00				OTHER		IRRIGATION
279053			MSCA *GIGER* 43	23N	01W	29	AB	No	WELL	17.00	16.20				11/6/2013	MONITORING
279052			MSCA *GIGER* 42	23N	01W	29	BB	No	WELL	13.00	5.90				11/6/2013	MONITORING
6263			UPLAND SITE* MUDDY CR DRAINAGE NR CORDOVA	23N	01W	29	BBBB	Yes	BOREHOLE							
223088			SEVEN ED	23N	01W	30	BDDD	Yes	WELL	20.00				OTHER		STOCKWATER
141102			SEVEN ED	23N	01W	30	CAAA	Yes	WELL	22.00	10.00		5.00	OTHER	7/29/1981	
141104			FRISBEE ROY	23N	01W	33	BBCB	Yes	WELL	27.70	11.26		5.00	OTHER	8/3/1981	DOMESTIC

End of Report.
10 record(s) listed.

Items of Note:

[1]This report is restricted to site types of **WELL, BOREHOLE, SPRING, COAL BED METHANE WELL, PETWELL, PIEZOMETER**.

[2]A single well record (a distinct GWIC Id) may be represented by more than one line in this report if more than one performance test was conducted on the well at the time of drilling.

Explanation of Columns:

GWIC Id = Key field for the GWIC database. Links to one page reports.
PDF = Are scanned documents available through the Document Manager?

- = Yes, click on the icon to download the PDF file.

- = No, well was submitted electronically. No paper record exists.
- = No, record does have a known well log but it is not scanned yet.
- = No, record may or may not have a document to scan. Metadata is unclear.
- = No, record was created from a source other than a well log. No paper record exists.

DNRC WR = Water right number assigned to this site by Department of Natural Resources and Conservation.
Site Name = Current owner name assigned to GWIC record.
Location = Location of site in Montana township, range, section, and quarter-section coordinates.
Ver? = Has this location been verified by field staff?
Type = Type of site assigned to GWIC record.
Td = **T**otal **d**epth of well in feet below ground.
Swl = **S**tatic **w**ater **l**evel in feet above/below ground - Negative values are reported for water levels that are above land surface.
Pwl = **P**umping **w**ater **l**evel in feet below ground.
Rwl = **R**ecovery **w**ater **l**evel in feet below ground.
Yield = Yield in gallons per minute.
Test = Type of performance test reported.
Date = Completion date of well/borehole.
Use = Reported use of water.

Disclaimer:
The preceding materials represent the contents of the GWIC databases at the Montana Bureau of Mines and Geology at the time and date of the retrieval. The information is considered unpublished and is subject to correction and review on a daily basis. The Bureau warrants the accurate transmission of the data to the original end user at the time and date of the retrieval [11/27/2017 4:31:56 PM]. Retransmission of the data to other users is discouraged and the Bureau claims no responsibility if the material is retransmitted. There may be wells in the request area that are not recorded at the Information Center.

Ground Water Information Center Online © 1998 - 2017
Contact Us | **Privacy Statement**

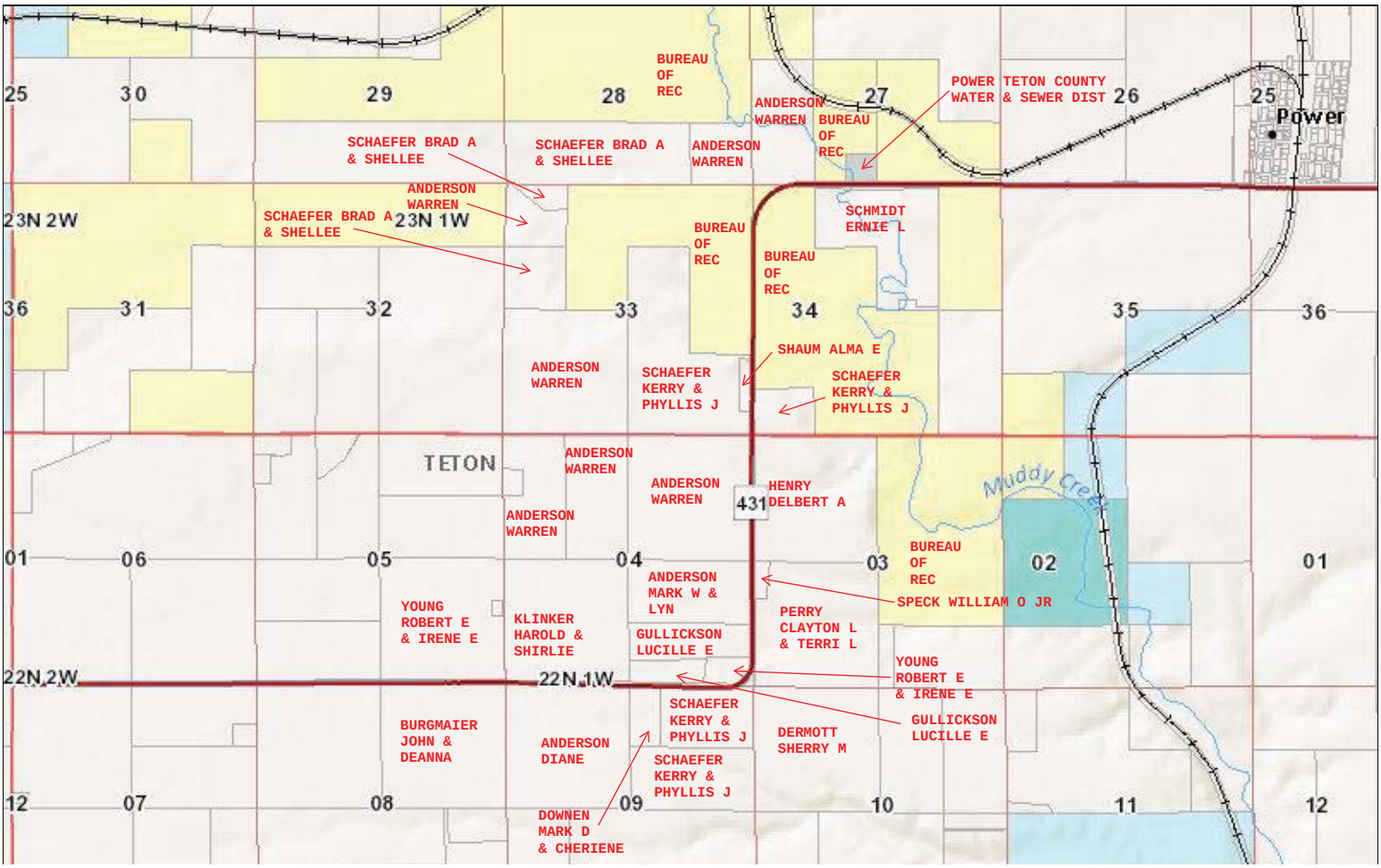
25
30
29
28
27
26
25
Power
BUREAU OF REC
ANDERSON WARREN
BUREAU OF REC
POWER TETON COUNTY WATER & SEWER DIST
SCHAEFER BRAD A & SHELLEE
SCHAEFER BRAD A & SHELLEE
ANDERSON WARREN
ANDERSON WARREN
23N 2W
23N 1W
SCHAEFER BRAD A & SHELLEE
BUREAU OF REC
SCHMIDT ERNIE L
BUREAU OF REC
36
31
32
33
34
35
36
SHAUM ALMA E
ANDERSON WARREN
SCHAEFER KERRY & PHYLLIS J
SCHAEFER KERRY & PHYLLIS J
TETON
ANDERSON WARREN
ANDERSON WARREN
431
HENRY DELBERT A
Muddy Creek
ANDERSON WARREN
01
06
05
04
03
02
01
BUREAU OF REC
ANDERSON MARK W & LYN
SPECK WILLIAM O JR
YOUNG ROBERT E & IRENE E
KLINKER HAROLD & SHIRLIE
GULLICKSON LUCILLE E
PERRY CLAYTON L & TERRI L
22N 2W
22N 1W
YOUNG ROBERT E & IRENE E
SCHAEFER KERRY & PHYLLIS J
GULLICKSON LUCILLE E
BURGMAIER JOHN & DEANNA
ANDERSON DIANE
DERMOTT SHERRY M
SCHAEFER KERRY & PHYLLIS J
12
07
08
09
10
11
12
DOWNEN MARK D & CHERIENE

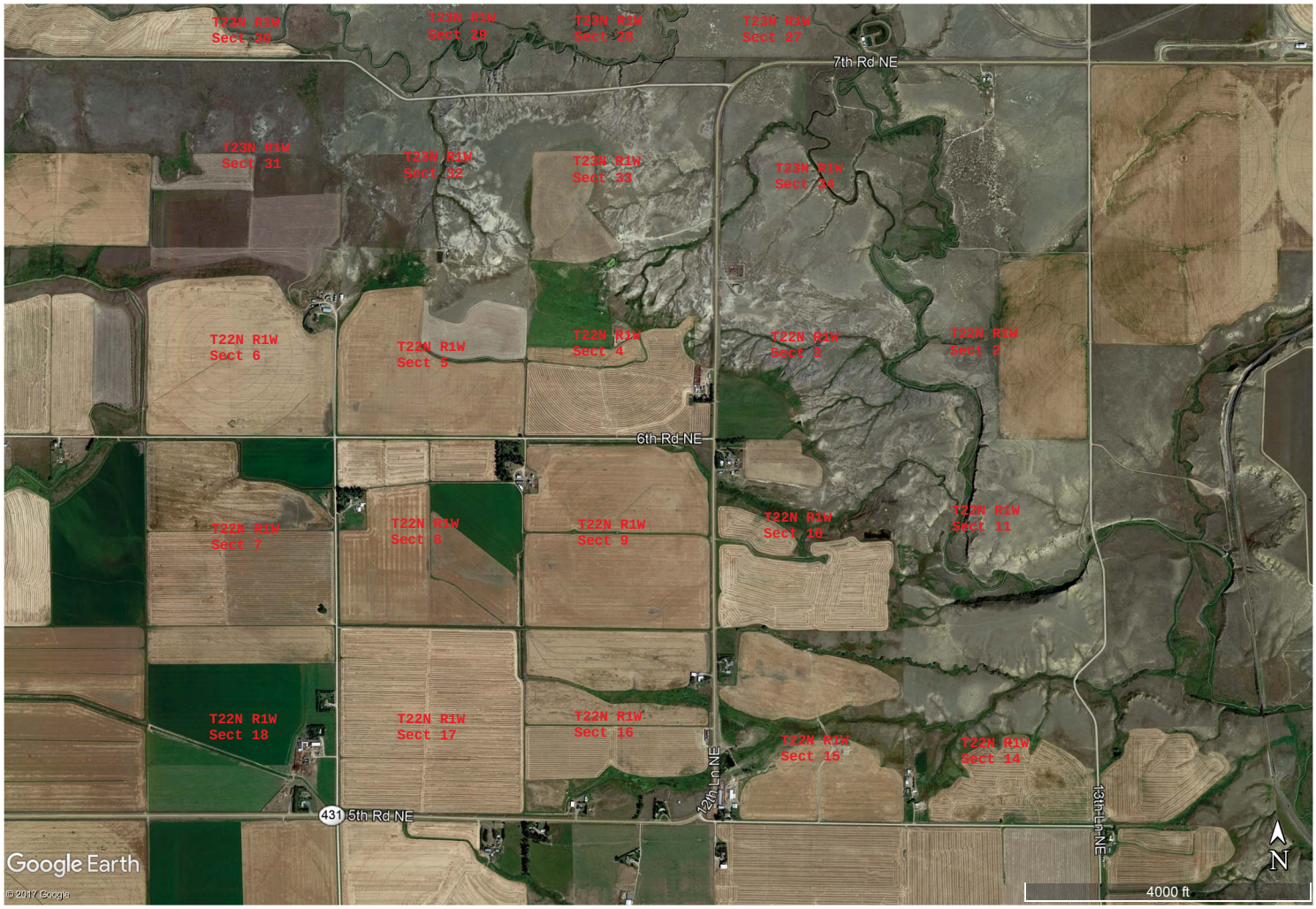
T23N R1W
Sect 30
T23N R1W
Sect 29
T23N R1W
Sect 28
T23N R1W
Sect 27
7th Rd NE
T23N R1W
Sect 31
T23N R1W
Sect 32
T23N R1W
Sect 33
T23N R1W
Sect 34
T22N R1W
Sect 6
T22N R1W
Sect 5
T22N R1W
Sect 4
T22N R1W
Sect 3
T22N R1W
Sect 2
6th Rd NE
T22N R1W
Sect 7
T22N R1W
Sect 8
T22N R1W
Sect 9
T22N R1W
Sect 10
T22N R1W
Sect 11
T22N R1W
Sect 18
T22N R1W
Sect 17
T22N R1W
Sect 16
T22N R1W
Sect 15
T22N R1W
Sect 14
72nd Ln NE
431
5th Rd NE
13th Ln NE
Google Earth
© 2017 Google
N
4000 ft

FlexTable: Pump Table

Current Time: 0.000 hours

ID	Label	Elevation (ft)	Pump Definition	Status (Initial)	Hydraulic Grade (Suction) (ft)	Hydraulic Grade (Discharge) (ft)	Flow (Total) (gpm)	Pump Head (ft)
154	Finished Water Pump	3,645.00	Power Finished Water-Grundfos Model CR10-7	On	(N/A)	(N/A)	(N/A)	(N/A)
199	PMP-2	3,743.00	Alternative T-6 Pump	On	3,743.00	3,806.86	69	63.86

FlexTable: Tank Table

Current Time: 0.000 hours

ID	Label	Zone	Elevation (Base) (ft)	Elevation (Minimum) (ft)	Elevation (Initial) (ft)
128	T-1	<None>	3,783.50	3,784.50	3,798.50
172	Clear Well	<None>	3,645.60	3,650.60	3,681.60

Elevation (Maximum) (ft)	Volume (Inactive) (MG)	Diameter (ft)	Flow (Out net) (gpm)	Hydraulic Grade (ft)
3,813.50	0.00	30.00	106	3,798.50
3,681.60	0.00	10.00	(N/A)	(N/A)

FlexTable: Pipe Table

Current Time: 0.000 hours

Label	Length (Scaled) (ft)	Start Node	Stop Node	Diameter (in)	Material
1st st -01	162	J-26	J-27	6.0	PVC
1st st-02	211	J-28	J-26	6.0	PVC
3rd St	716	J-41	J-7	6.0	PVC
4th S-06	50	J-2	J-11	10.0	Ductile Iron
4th St-01	35	J-36	J-8	8.0	PVC
4th St-02	321	J-8	J-37	8.0	PVC
4th St-03	41	J-37	J-19	8.0	PVC
4th St-04	341	J-19	J-1	8.0	PVC
4th St-05	355	J-1	J-2	10.0	Ductile Iron
4th St-07	662	J-11	J-3	10.0	PVC
6th St-01	342	J-32	J-35	6.0	PVC
6th St-02	354	J-34	J-32	6.0	PVC
7th Rd NE	374	J-40	J-29	6.0	PVC
7th ST-01	328	J-30	J-31	6.0	PVC
Bulk Water Line	123	J-25	J-26	6.0	PVC
Cascade Ave	370	J-2	J-41	6.0	PVC
Central Ave--02	339	J-32	J-21	6.0	PVC
Central Ave-01	27	J-21	J-30	6.0	PVC
Central Ave-03	346	J-32	J-15	6.0	PVC
Central Ave-04	379	J-15	J-37	6.0	PVC
Central Ave-05	747	J-37	J-10	6.0	PVC
Central Ave-06	336	J-10	J-28	6.0	PVC
Central Ave-07	224	J-28	J-29	6.0	PVC
H-01	24	H-01	J-21	6.0	PVC
H-02	24	H-02	J-15	6.0	PVC
H-03	27	H-03	J-10	6.0	PVC
H-04	25	H-04	J-18	6.0	PVC
H-05	25	H-05	J-20	6.0	PVC
H-06	25	H-06	J-17	6.0	PVC
H-07	79	H-07	J-22	6.0	PVC
H-08	25	H-08	J-9	6.0	PVC
H-09	42	H-09	J-13	6.0	PVC
H-10	25	H-10	J-8	6.0	PVC
H-11	25	H-11	J-19	6.0	PVC
H-12	25	H-12	J-11	6.0	PVC
H-13	96	H-13	J-14	6.0	PVC
H-13	25	H-13	J-16	6.0	PVC
H-14	25	H-14	J-12	6.0	PVC
Hill Ave-01	723	J-34	J-1	6.0	PVC
Hill Ave-02	525	J-1	J-18	6.0	PVC
Hill Ave-03	715	J-18	J-20	6.0	PVC
Hill Ave-04	61	J-20	J-40	6.0	PVC
P-39	197	Muddy Creek	Clear Well	6.0	Ductile Iron
P-42	27	Finished Water Pump	Clear Well	4.0	Ductile Iron
P-43	20	Finished Water Pump	J-43	4.0	Ductile Iron

FlexTable: Pipe Table

Current Time: 0.000 hours

Label	Length (Scaled) (ft)	Start Node	Stop Node	Diameter (in)	Material	Hazen-Williams C	Minor Loss Coefficient (Local)	Length (User Defined) (ft)
P-45	73	J-43	J-44	6.0	PVC	150.0	0.000	0
P-46	8,332	J-44	J-23	6.0	PVC	150.0	0.000	0
P-47	118	R-2	PMP-2	1,000.0	PVC	150.0	0.000	0
P-48	11,051	PMP-2	J-44	6.0	PVC	130.0	0.000	0
P-49	1,082	J-40	J-38	6.0	PVC	150.0	0.000	0
P-102	108	J-4	T-1	14.0	PVC	150.0	0.000	0
Pipe-101	48	J-23	J-24	6.0	PVC	150.0	0.000	0
Rainbow-01	328	J-17	J-3	6.0	PVC	150.0	0.000	0
Rainbow-02	44	J-7	J-17	6.0	PVC	150.0	0.000	0
Rainbow-03	19	J-7	J-6	6.0	PVC	130.0	0.000	0
Rainbow-4	11	J-5	J-6	6.0	PVC	150.0	0.000	0
Rainbow-05	745	J-5	J-14	6.0	PVC	150.0	0.000	0
Rainbow-06	91	J-14	J-38	6.0	PVC	150.0	0.000	0
Rainbow-07	330	J-3	J-16	14.0	PVC	150.0	0.000	0
Rainbow-08	1,091	J-16	J-12	14.0	PVC	150.0	0.000	0
Rainbow-09	3,424	J-12	J-4	14.0	PVC	150.0	0.000	0
Teton Ave -05	679	J-22	J-9	6.0	PVC	150.0	0.000	0
Teton Ave -06	10	J-22	J-27	6.0	PVC	150.0	0.000	0
Teton Ave-01	392	J-35	J-31	6.0	PVC	150.0	0.000	0
Teton Ave-07	223	J-24	J-27	6.0	PVC	150.0	0.000	0
Teton-02	356	J-13	J-35	6.0	PVC	150.0	0.000	0
Teton-03	369	J-36	J-13	6.0	PVC	150.0	0.000	0
Teton-04	391	J-9	J-36	6.0	PVC	150.0	0.000	0

FlexTable: Pipe Table

Current Time: 0.000 hours

Hazen-Williams C	Minor Loss Coefficient (Local)	Length (User Defined) (ft)
150.0	0.000	0
150.0	0.000	0
150.0	0.000	0
150.0	0.000	0
150.0	0.000	0
150.0	0.000	0
150.0	0.000	0
150.0	0.000	0
150.0	0.000	0
150.0	0.000	0
150.0	0.000	0
150.0	0.000	0
150.0	0.000	0
150.0	0.000	0
150.0	0.000	0
150.0	0.000	0
150.0	0.000	0
150.0	0.000	0
150.0	0.000	0
150.0	0.000	0
150.0	0.000	0
150.0	0.000	0
150.0	0.000	0
130.0	0.000	0
130.0	0.000	0
130.0	0.000	0
150.0	0.000	0
150.0	0.000	0
150.0	0.000	1
150.0	0.000	12,500
150.0	0.000	0
150.0	0.000	0
150.0	0.000	0
150.0	0.000	0
150.0	0.000	0
150.0	0.000	0
150.0	0.000	0
150.0	0.000	0
150.0	0.000	0
150.0	0.000	0
150.0	0.000	0
150.0	0.000	0
150.0	0.000	0
150.0	0.000	0
150.0	0.000	0
150.0	0.000	0
150.0	0.000	0
150.0	0.000	0
150.0	0.000	0
150.0	0.000	0

FlexTable: Pipe Table

Current Time: 0.000 hours

Hazen-Williams C	Minor Loss Coefficient (Local)	Length (User Defined) (ft)
150.0	0.000	0

FlexTable: Junction Table

Current Time: 0.000 hours

Label	Elevation (ft)	Demand (gpm)	Hydraulic Grade (ft)	Pressure (psi)
J-1	3,678.00	7	3,798.39	52
J-2	3,672.00	7	3,798.40	55
J-3	3,678.50	7	3,798.43	52
J-4	3,772.00	0	3,798.50	11
J-5	3,676.50	7	3,798.40	53
J-6	3,676.50	7	3,798.40	53
J-7	3,676.50	7	3,798.40	53
J-8	3,689.00	0	3,798.39	47
J-9	3,689.00	0	3,798.40	47
J-10	3,687.50	0	3,798.39	48
J-11	3,670.00	0	3,798.41	56
J-12	3,684.00	0	3,798.45	50
J-13	3,688.00	0	3,798.38	48
J-14	3,676.50	0	3,798.39	53
J-15	3,685.00	0	3,798.38	49
J-16	3,680.00	0	3,798.43	51
J-17	3,677.00	0	3,798.40	53
J-18	3,676.00	7	3,798.39	53
J-19	3,686.00	0	3,798.39	49
J-20	3,675.50	0	3,798.39	53
J-21	3,681.50	0	3,798.38	51
J-22	3,690.50	0	3,798.41	47
J-23	3,688.00	7	3,798.49	48
J-24	3,690.50	7	3,798.47	47
J-25	3,688.00	7	3,798.40	48
J-26	3,688.00	7	3,798.40	48
J-27	3,690.50	7	3,798.41	47
J-28	3,686.00	7	3,798.39	49
J-29	3,685.00	7	3,798.39	49
J-30	3,681.50	7	3,798.38	51
J-31	3,687.00	7	3,798.38	48
J-32	3,684.00	7	3,798.38	49
J-34	3,677.00	7	3,798.38	53
J-35	3,685.00	7	3,798.38	49
J-36	3,690.00	7	3,798.39	47
J-37	3,687.00	7	3,798.39	48
J-38	3,676.50	7	3,798.39	53
J-40	3,675.50	7	3,798.39	53
J-41	3,671.50	7	3,798.40	55
J-43	3,645.04	(N/A)	(N/A)	(N/A)
J-44	3,645.57	0	3,801.84	68

Fire Flow Node FlexTable: Fire Flow Report

Current Time: 0.000 hours

Label	Fire Flow (Needed) (gpm)	Fire Flow (Available) (gpm)	Pressure (Residual Lower Limit) (psi)	Pressure (Calculated Residual) (psi)	Junction w/ Minimum Pressure (System)
H-12	1,000	3,000	20	29	J-4
H-13	1,000	3,000	20	32	J-4
H-14	1,000	3,000	20	34	J-4
H-06	1,000	2,620	20	20	J-4
H-11	1,000	2,519	20	20	J-4
H-10	1,000	2,252	20	20	J-4
H-05	1,000	2,090	20	20	J-4
H-04	1,000	1,998	20	20	J-4
H-02	1,000	1,976	20	20	J-4
H-09	2,000	1,811	20	20	J-4
H-03	1,000	1,807	20	20	J-4
H-08	2,000	1,768	20	20	J-4
H-01	1,000	1,741	20	20	J-4
H-13	1,000	1,648	20	20	J-4
H-07	1,000	1,623	20	20	J-4
J-1	1,000	(N/A)	20	(N/A)	(N/A)
J-2	1,000	(N/A)	20	(N/A)	(N/A)
J-3	1,000	(N/A)	20	(N/A)	(N/A)
J-4	1,000	(N/A)	20	(N/A)	(N/A)
J-5	1,000	(N/A)	20	(N/A)	(N/A)
J-6	1,000	(N/A)	20	(N/A)	(N/A)
J-7	1,000	(N/A)	20	(N/A)	(N/A)
J-8	1,000	(N/A)	20	(N/A)	(N/A)
J-9	1,000	(N/A)	20	(N/A)	(N/A)
J-10	1,000	(N/A)	20	(N/A)	(N/A)
J-11	1,000	(N/A)	20	(N/A)	(N/A)
J-12	1,000	(N/A)	20	(N/A)	(N/A)
J-13	1,000	(N/A)	20	(N/A)	(N/A)
J-14	1,000	(N/A)	20	(N/A)	(N/A)
J-15	1,000	(N/A)	20	(N/A)	(N/A)
J-16	1,000	(N/A)	20	(N/A)	(N/A)
J-17	1,000	(N/A)	20	(N/A)	(N/A)
J-18	1,000	(N/A)	20	(N/A)	(N/A)
J-19	1,000	(N/A)	20	(N/A)	(N/A)
J-20	1,000	(N/A)	20	(N/A)	(N/A)
J-21	1,000	(N/A)	20	(N/A)	(N/A)
J-22	1,000	(N/A)	20	(N/A)	(N/A)
J-23	1,000	(N/A)	20	(N/A)	(N/A)
J-24	1,000	(N/A)	20	(N/A)	(N/A)
J-25	1,000	(N/A)	20	(N/A)	(N/A)
J-26	1,000	(N/A)	20	(N/A)	(N/A)
J-27	1,000	(N/A)	20	(N/A)	(N/A)
J-28	1,000	(N/A)	20	(N/A)	(N/A)
J-29	1,000	(N/A)	20	(N/A)	(N/A)
J-30	1,000	(N/A)	20	(N/A)	(N/A)

Fire Flow Node FlexTable: Fire Flow Report

Current Time: 0.000 hours

Label	Fire Flow (Needed) (gpm)	Fire Flow (Available) (gpm)	Pressure (Residual Lower Limit) (psi)	Pressure (Calculated Residual) (psi)	Junction w/ Minimum Pressure (System)
J-31	1,000	(N/A)	20	(N/A)	(N/A)
J-32	1,000	(N/A)	20	(N/A)	(N/A)
J-34	1,000	(N/A)	20	(N/A)	(N/A)
J-35	1,000	(N/A)	20	(N/A)	(N/A)
J-36	1,000	(N/A)	20	(N/A)	(N/A)
J-37	1,000	(N/A)	20	(N/A)	(N/A)
J-38	1,000	(N/A)	20	(N/A)	(N/A)
J-40	1,000	(N/A)	20	(N/A)	(N/A)
J-41	1,000	(N/A)	20	(N/A)	(N/A)
J-43	1,000	(N/A)	20	(N/A)	(N/A)
J-44	1,000	(N/A)	20	(N/A)	(N/A)

Table 4-8
Power Teton - County Water & Sewer District Preliminary Engineering Report
Construction Cost Estimate
Treatment Alternative T-6 Shallow Ground Water Well

Item	Quantity	Units	Unit Cost	Cost	Salvage Value[1]
Mobilization	5	%		$81,595	$0
Land Purchase	10	ACRES	$7,000	$70,000	$35,000
Well Installation	1	LS	$45,000	$45,000	$22,500
Pump House	1	LS	$75,000	$75,000	$37,500
Install New Pumps	2	EA	$9,000	$18,000	$4,500
Emergency Backup Genererator	1	LS	$55,000	$55,000	$27,500
New 6-inch PVC Water Main and Fittings	12,500	LF	$80	$1,000,000	$750,000
Road/Creek Directional Drilling	1	LS	$100,000	$100,000	$50,000
Connect to Existing Distibution System	1	EA	$1,500	$1,500	$750
Install new SCADA/PLC System	1	LS	$30,000	$30,000	$15,000
Demo Existing Treatment Plant Equipment	1	LS	$50,000	$50,000	$0
New Bulk Water Station	1	EA	$140,000	$140,000	$70,000
Chlorination Equipment	2	EA	$7,500	$15,000	$3,750
Temporary Erosion Protection	1	LS	$5,000	$5,000	$0
Layout and Construction Staking	1	LS	$10,000	$10,000	$0
Exploratory Excavation	8	HR	$150.00	$1,200	$0
Construction Materials Testing	1	%		$16,200	$0
			Construction Estimate	**$1,713,495**	**$1,016,500**
Water Rights Negotiations					
Water Rights	1	LS	$60,000	$60,000	
Bedrock Surface Investigation	1	LS	$11,000	$11,000	
Hydrogeologic Survey	1	LS	$8,500	$8,500	
			Subtotal	**$1,792,995**	
AIS Compiance-Materials and Project Management			5%	$89,650	
Contingency			15%	$282,400	
Administrative, Legal, & Engineering			25%	$541,260	
Total (rounded to the nearest thousand)				**$2,627,000**	**$977,000**

1. Salvage Value PW Factor @ 0.2% for 20 years

Table 4-9 Power Teton - County Water & Sewer District Preliminary Engineering Report Annual Operations and Maintenance Costs Treatment Alternative T-6 Shallow Ground Water South of Muddy Creek				
Description	**Est. Qty.**	**Unit**	**Est. U/C**	**Est. Cost**
Accounting & Auditing	1	LS	$700	$700
Bank Service Charges	1	LS	$0	$0
Chemicals	1	LS	$1,532	$1,532
Dues/Certifications/Training	1	LS	$425	$425
Easement & Water Assessment	1	LS	$227	$227
Fees (Permits, Service, Recording)	1	LS	$774	$774
Insurance & Bonding	1	LS	$2,195	$2,195
Payroll Expense	1	LS	$11,692	$11,692
Postage & Office	1	LS	$980	$980
Professional Fees	1	LS	$0	$0
Repairs	1	LS	$3,000	$3,000
Short Lived Assets	1	LS	$1,800	$1,800
Supplies	1	LS	$1,642	$1,642
Testing Water	1	LS	$1,994	$1,994
Truck Expenses	1	LS	$752	$752
Utilities	1	LS	$2,900	$2,900
Total Annual Operating and Maintenance Costs (rounded to the nearest $100)				**$30,600**
Real Interest Rate	0.2%			
Present Worth for 20 Years @ 0.2% (rounded to the nearest $100)				**$600,000**

1. Expense adjusted to reflect O&M cost specific to Alternative.

Table 2-14 Operations and Maintenance Budget					
Operating Expenses	**FY 2013**	**FY 2014**	**FY 2015**	**FY 2016**	**Average Operating Expenses**
Accounting & Auditing	$625	$660	$675	$700	$665
Bank Service Charges	---	$19	---	---	$19
Chemicals	$5,018	$6,015	$6,741	$6,128	$5,976
Depreciation	$98,189	$98,303	$100,607	$100,607	$99,427
Dues/Certifications/Training	$425	$425	$425	$425	$425
Easement & Water Assessment	$183	$196	$211	$227	$204
Fees (Permits, Service, Recording)	$756	$920	$768	$774	$805
Insurance & Bonding	$1,779	$1,813	$1,846	$1,995	$1,858
Payroll Expense	$10,451	$11,285	$11,232	$11,692	$11,165
Postage & Office	$1,534	$655	$834	$980	$1,001
Professional Fees	$249	$9,026	$1,000	---	$3,425
Repairs	$1,514	$1,539	$8,980	$7,490	$4,881
Supplies	$57	$1,296	$2,672	$1,642	$1,417
Testing Water	$1,938	$1,849	$2,076	$1,994	$1,964
Truck Expenses	$1,380	$1,282	$1,235	$752	$1,162
Utilities	$7,212	$9,033	$8,343	$8,919	$8,377
Total Operating Expenses	**$131,310**	**$144,316**	**$147,645**	**$144,325**	**$141,899**

Short - Lived Asset Reserves Alternative T6A Shallow Ground Water South of Muddy Creek			
Asset	**Projected Repair/Replacement[1]**	**Replacement Cost**	**Annual Reserve**
Finished Water Pump	2030	$18,000	$1,800
Total Short-Lived Asset Budget (rounded to nearest $100)			**$1,800**

1. Short-lived assets addressed through planning period. Projected replacement at or longer than 20 years are not included in the total

APPENDIX C

(Revised November 2017)

DISCOUNT RATES FOR COST-EFFECTIVENESS, LEASE PURCHASE, AND RELATED ANALYSES

Effective Dates. This appendix is updated annually. This version of the appendix is valid for calendar year 2018. A copy of the updated appendix can be obtained in electronic form through the OMB home page at https://www.whitehouse.gov/wp-content/uploads/2017/11/Appendix-C.pdf. The text of the Circular is found at https://www.whitehouse.gov/sites/whitehouse.gov/files/omb/circulars/A94/a094.pdf, and a table of past years' rates is located at https://www.whitehouse.gov/wp-content/uploads/2017/11/DISCHIST-2018-1.pdf. Updates of the appendix are also available upon request from OMB's Office of Economic Policy (202-395-3316).

Nominal Discount Rates. A forecast of nominal or market interest rates for calendar year 2018 based on the economic assumptions for the 2019 Budget is presented below. These nominal rates are to be used for discounting nominal flows, which are often encountered in lease-purchase analysis.

Nominal Interest Rates on Treasury Notes and Bonds of Specified Maturities (in percent)

3-Year	5-Year	7-Year	10-Year	20-Year	30-Year
1.0	1.3	1.6	1.8	2.2	2.6

Real Discount Rates. A forecast of real interest rates from which the inflation premium has been removed and based on the economic assumptions from the 2019 Budget is presented below. These real rates are to be used for discounting constant-dollar flows, as is often required in cost-effectiveness analysis.

Real Interest Rates on Treasury Notes and Bonds of Specified Maturities (in percent)

3-Year	5-Year	7-Year	10-Year	20-Year	30-Year
-0.8	-0.6	-0.3	-0.1	0.2	0.6

Analyses of programs with terms different from those presented above may use a linear interpolation. For example, a four-year project can be evaluated with a rate equal to the average of the three-year and five-year rates. Programs with durations longer than 30 years may use the 30-year interest rate.

APPENDIX 4 - E

Alternative T-7 Supporting Documents

Ground Water Information Center | MBMG Data Center
Montana Bureau of Mines and Geology
Montana Tech of The University of Montana
1300 West Park Street - Natural Resources Building Room 329
Butte Montana 59701-8997
Ph: (406) 496-4336 Fx: (406) 496-4343

You are currently signed in. | 11/27/2017
Sign Out

| Home | Well Data | Reports | Data Coop | DrillerWeb | DNRC | Help! |

Menus: | Main | SWL | GWCP | Projects | Coal | Coal Quality | Geothermal

GWIC Data > Well Construction Data > Township: 22N Range: 01W Sec: 6, 5, 4, 3, 2, 7, 8, 9, 10, 11

The following data were returned from the GWIC databases for the area you requested. For a more detailed description of the data view the GWIC Metadata report. If you notice data entry errors or have questions please let us know by sending us an Email at **GWIC@mtech.edu**. If you wish to view a one page report for a particular site, click the hyperlinked **Gwic Id** for that well. Scroll to the right of your screen to view all the data. All data displayed on the screen may not show up when printed.

Retrieval Statistics*

Field	Max	Min	Avg
Total Depth (ft)	100.00	12.00	26.90
Static Water Level (ft)	28.00	2.29	13.72
Yield (gpm)	100.00	1.50	15.45

* These statistics do not take any geographic, topographic, or geologic factors into consideration. Negative swl values are reported for water levels that are above land surface.

Did you know about...

Other GWIC data

GWIC has 10 water quality sample(s) for this area.
GWIC has 31 field visit(s) for this request area.
GWIC has 4 water level(s) for this request area.

Thanks, Just take me back to the menu.

Other MBMG data

MBMG has 368 publications available for TETON county.
MBMG has 1 abandoned mine record(s) for this request area.

Gwic Id	PDF	DNRC WR	Site Name	Twn	Rng	Sec	Q Sec	Ver?	Type	Td	Swl	Pwl	Rwl	Yield	Test	Date	Use
124189			CLARK VERNE	22N	01W	2		No	WELL	100.00				1.50	BAILER	5/25/1949	STOCKWATER
76498			DAVIS LYLE E. AND EMMA M.	22N	01W	3		No	WELL	14.00	8.00			10.00	OTHER	9/1/1936	DOMESTIC

76497			DAVIS LYLE E. AND EMMA M. *WELL 1	22N	01W	3		No	WELL	18.00	8.00			10.00	OTHER	9/1/1936	DOMESTIC
76494			ODAY JOHN	22N	01W	3	BBBB	Yes	WELL	24.00	24.00			30.00	PUMP	7/20/1956	DOMESTIC
76495			ODAY JOHN *WELL 2	22N	01W	3	BBBC	Yes	WELL	12.00				30.00	OTHER	3/22/1962	DOMESTIC
76496			JOHNSON AMANDA *WELL 1	22N	01W	3	C	No	WELL	35.00	25.00			100.00	OTHER	6/1/1948	DOMESTIC
76499			JOHNSON AMANDA *WELL 2	22N	01W	3	C	No	WELL	35.00	25.00				OTHER	6/1/1948	DOMESTIC
154133			CONTWAY ROSS AND TINA	22N	01W	3	CBB	No	WELL	25.00	6.00		6.00	30.00	AIR	7/7/1993	DOMESTIC
76500		C062706-00	BAKER WILLIAM	22N	01W	3	CCC	Yes	WELL	26.00	20.00	21.00		12.00	PUMP	7/15/1986	DOMESTIC
76502			STELZER RICHARD AND SUSAN	22N	01W	4	BBCA	Yes	WELL	28.00	28.00			20.00	PUMP	1/1/1942	DOMESTIC
76501			STELZER RICHARD AND SUSAN	22N	01W	4	BBCB	Yes	WELL	27.00				21.00	BAILER	3/8/1948	DOMESTIC
161793			POWER WATER DISTRICT/WALKER GENE	22N	01W	4	DADB	Yes	WELL	15.60	11.60				OTHER		
6162			GETTEL ARNOLD R. *WELL 2	22N	01W	4	DDCD	Yes	WELL	19.00	16.14			20.00	OTHER	4/1/1958	DOMESTIC
76504			BIVENS J.C.	22N	01W	5		No	WELL	45.00				2.00	BAILER	4/16/1947	DOMESTIC
140852			COLLEY ROBERT	22N	01W	5	ABAB	Yes	WELL	12.10	2.29			5.00	OTHER		
231751			BERG ERNEST	22N	01W	5	BABB	Yes	WELL	20.00							DOMESTIC
140851			MBMG *TETON (NO NAME)	22N	01W	5	BABB	Yes	WELL	14.20	4.95	6.50		5.00	OTHER		

76505		GUNDERSON MARTIN	22N	01W	5	BABD	No	WELL	20.00	8.00		15.00	OTHER	3/1/1951	DOMESTIC
76506		SCHAEFER CLIFFORD L.	22N	01W	5	BBBA	No	WELL	18.00			10.00	OTHER	1/1/1968	DOMESTIC
76507		HINCKLEY DEAN S. AND ALVINA	22N	01W	5	CCCC	Yes	WELL	60.00			5.00	OTHER	1/1/1937	DOMESTIC
140850		RIPHENBURG REED	22N	01W	5	DADA	Yes	WELL					OTHER		
140853		INGEBRIGTSON AGNES	22N	01W	6	BCBB	Yes	WELL				5.00	OTHER	7/17/1981	
140854		POPPELTON ROBERT	22N	01W	7	AADB	Yes	WELL	30.00	6.00		5.00	OTHER		
76509		BUNKER EUGENE B.	22N	01W	7	AADC	No	WELL	35.00	25.00		5.00	OTHER	6/1/1961	STOCKWATER
76508		BUNKER EUGENE B. *WELL 1	22N	01W	7	AADD	No	WELL	40.00	25.00		5.00	OTHER	6/1/1961	STOCKWATER
140855		KNIGHT JACK	22N	01W	7	BCCC	Yes	WELL				6.50	OTHER		
76510		MCDERMOTT CHARLES G.	22N	01W	7	C	No	WELL		12.00			OTHER	1/1/1916	DOMESTIC
140856		ROWLEY FRED	22N	01W	7	DACD	Yes	WELL	12.00	2.50		5.00	OTHER		
277733		COWGILL, JACOB	22N	01W	8		No	WELL	25.00	12.00		15.00	PUMP	5/2/2014	IRRIGATION
277733		COWGILL, JACOB	22N	01W	8		No	WELL	25.00	12.00		15.00	AIR	5/2/2014	IRRIGATION
76511		SCHULTZ WILLIAM H *WELL 1	22N	01W	8	BBA	No	WELL	22.00	15.00		30.00	OTHER	1/1/1937	DOMESTIC
76512		SCHULTZ WILLIAM H *WELL 2	22N	01W	8	BBA	Yes	WELL	13.00	4.88		30.00	OTHER	1/1/1937	DOMESTIC
140857		JOHNSON TOM	22N	01W	8	DAAD	Yes	WELL				5.00	OTHER		
140858		VERNON WILL	22N	01W	9	ABBB	Yes	WELL	16.00	8.98		10.00	OTHER		DOMESTIC

76513		C022254-00	SCHLINGEN JOHN	22N	01W	10	BBBA	Yes	WELL	30.00	19.00	27.00	6.00	PUMP	10/24/1978	DOMESTIC
140859			YOUNG STEVE AND SALLY	22N	01W	11	CDCC	Yes	WELL	18.00			10.00	OTHER		DOMESTIC

End of Report.
36 record(s) listed.

Items of Note:

[1]This report is restricted to site types of **WELL, BOREHOLE, SPRING, COAL BED METHANE WELL, PETWELL, PIEZOMETER**.

[2]A single well record (a distinct GWIC Id) may be represented by more than one line in this report if more than one performance test was conducted on the well at the time of drilling.

Explanation of Columns:

GWIC Id = Key field for the GWIC database. Links to one page reports.
PDF = Are scanned documents available through the Document Manager?

- = Yes, click on the icon to download the PDF file.
- = No, well was submitted electronically. No paper record exists.
- = No, record does have a known well log but it is not scanned yet.
- = No, record may or may not have a document to scan. Metadata is unclear.
- = No, record was created from a source other than a well log. No paper record exists.

DNRC WR = Water right number assigned to this site by Department of Natural Resources and Conservation.
Site Name = Current owner name assigned to GWIC record.
Location = Location of site in Montana township, range, section, and quarter-section coordinates.
Ver? = Has this location been verified by field staff?
Type = Type of site assigned to GWIC record.
Td = **T**otal **d**epth of well in feet below ground.
Swl = **S**tatic **w**ater **l**evel in feet above/below ground - Negative values are reported for water levels that are above land surface.
Pwl = **P**umping **w**ater **l**evel in feet below ground.
Rwl = **R**ecovery **w**ater **l**evel in feet below ground.
Yield = Yield in gallons per minute.
Test = Type of performance test reported.
Date = Completion date of well/borehole.
Use = Reported use of water.

Disclaimer:
The preceding materials represent the contents of the GWIC databases at the Montana Bureau of Mines and Geology at the time and date of the retrieval. The information is considered unpublished and is subject to correction and review on a daily basis. The Bureau warrants the accurate transmission of the data to the original end user at the time and date of the retrieval [11/27/2017 4:23:24 PM]. Retransmission of the data to other users is discouraged and the Bureau claims no responsibility if the material is retransmitted. There may be wells in the request area that are not recorded at the Information Center.

Ground Water Information Center Online © 1998 - 2017
Contact Us | **Privacy Statement**

Ground Water Information Center | **MBMG Data Center**
Montana Bureau of Mines and Geology
Montana Tech of The University of Montana
1300 West Park Street - Natural Resources Building Room 329
Butte Montana 59701-8997
Ph: (406) 496-4336 Fx: (406) 496-4343

You are currently signed in. | 11/27/2017
Sign Out

| Home | Well Data | Reports | Data Coop | DrillerWeb | DNRC | Help! |

Menus: | Main | SWL | GWCP | Projects | Coal | Coal Quality | Geothermal

GWIC Data > Well Construction Data > Township: 23N Range: 01W Sec: 30, 29, 28, 27, 26, 31, 33, 34, 35

The following data were returned from the GWIC databases for the area you requested. For a more detailed description of the data view the GWIC Metadata report. If you notice data entry errors or have questions please let us know by sending us an Email at **GWIC@mtech.edu**. If you wish to view a one page report for a particular site, click the hyperlinked **Gwic Id** for that well. Scroll to the right of your screen to view all the data. All data displayed on the screen may not show up when printed.

Retrieval Statistics*

Field	Max	Min	Avg
Total Depth (ft)	84.00	13.00	35.86
Static Water Level (ft)	80.00	5.90	22.91
Yield (gpm)	20.00	5.00	10.20

* These statistics do not take any geographic, topographic, or geologic factors into consideration. Negative swl values are reported for water levels that are above land surface.

Did you know about...

Other GWIC data

GWIC has 6 water quality sample(s) for this area.
GWIC has 10 field visit(s) for this request area.
GWIC has 1 water level(s) for this request area.

Thanks, Just take me back to the menu.

Other MBMG data

MBMG has 368 publications available for TETON county.
MBMG has 0 abandoned mine record(s) for this request area.

Gwic Id	PDF	DNRC WR	Site Name	Twn	Rng	Sec	Q Sec	Ver?	Type	Td	Swl	Pwl	Rwl	Yield	Test	Date	Use
77392			DAHLMAN ARTHUR W.	23N	01W	26		No	WELL	31.00	17.00			5.00	OTHER	9/30/1948	DOMESTIC

77394			FITZGERALD DANA	23N	01W	26	ADD	No	WELL	84.00	80.00		16.00	OTHER	10/1/1954	DOMESTIC
77395		C62759-00	BAKKE EMIL	23N	01W	26	DDDD	Yes	WELL	65.00	20.00	26.00	20.00	PUMP	1/6/1987	DOMESTIC
222562			BAKKE, EMIL	23N	01W	26	DDDD	Yes	WELL	43.00				OTHER		IRRIGATION
279053			MSCA *GIGER* 43	23N	01W	29	AB	No	WELL	17.00	16.20				11/6/2013	MONITORING
279052			MSCA *GIGER* 42	23N	01W	29	BB	No	WELL	13.00	5.90				11/6/2013	MONITORING
6263			UPLAND SITE* MUDDY CR DRAINAGE NR CORDOVA	23N	01W	29	BBBB	Yes	BOREHOLE							
223088			SEVEN ED	23N	01W	30	BDDD	Yes	WELL	20.00				OTHER		STOCKWATER
141102			SEVEN ED	23N	01W	30	CAAA	Yes	WELL	22.00	10.00		5.00	OTHER	7/29/1981	
141104			FRISBEE ROY	23N	01W	33	BBCB	Yes	WELL	27.70	11.26		5.00	OTHER	8/3/1981	DOMESTIC

End of Report.
10 record(s) listed.

Items of Note:

[1]This report is restricted to site types of **WELL, BOREHOLE, SPRING, COAL BED METHANE WELL, PETWELL, PIEZOMETER**.

[2]A single well record (a distinct GWIC Id) may be represented by more than one line in this report if more than one performance test was conducted on the well at the time of drilling.

Explanation of Columns:

GWIC Id = Key field for the GWIC database. Links to one page reports.
PDF = Are scanned documents available through the Document Manager?

- = Yes, click on the icon to download the PDF file.

- = No, well was submitted electronically. No paper record exists.
- = No, record does have a known well log but it is not scanned yet.
- = No, record may or may not have a document to scan. Metadata is unclear.
- = No, record was created from a source other than a well log. No paper record exists.

DNRC WR = Water right number assigned to this site by Department of Natural Resources and Conservation.
Site Name = Current owner name assigned to GWIC record.
Location = Location of site in Montana township, range, section, and quarter-section coordinates.
Ver? = Has this location been verified by field staff?
Type = Type of site assigned to GWIC record.
Td = **T**otal **d**epth of well in feet below ground.
Swl = **S**tatic **w**ater **l**evel in feet above/below ground - Negative values are reported for water levels that are above land surface.
Pwl = **P**umping **w**ater **l**evel in feet below ground.
Rwl = **R**ecovery **w**ater **l**evel in feet below ground.
Yield = Yield in gallons per minute.
Test = Type of performance test reported.
Date = Completion date of well/borehole.
Use = Reported use of water.

Disclaimer:
The preceding materials represent the contents of the GWIC databases at the Montana Bureau of Mines and Geology at the time and date of the retrieval. The information is considered unpublished and is subject to correction and review on a daily basis. The Bureau warrants the accurate transmission of the data to the original end user at the time and date of the retrieval [11/27/2017 4:31:56 PM]. Retransmission of the data to other users is discouraged and the Bureau claims no responsibility if the material is retransmitted. There may be wells in the request area that are not recorded at the Information Center.

Ground Water Information Center Online © 1998 - 2017
Contact Us | **Privacy Statement**

Table 4-10
Power Teton - County Water & Sewer District Preliminary Engineering Report
Construction Cost Estimate
Treatment Alternative T-7 Deep Ground Water Wells

Item	Quantity	Units	Unit Cost	Cost	Salvage Value[1]
Mobilization	5	%		$90,580	$0
Land Purchase	8.0	ACRES	$7,000	$56,000	$0
Well Installation	1	LS	$600,000	$600,000	$300,000
Pump House	1	LS	$50,000	$50,000	$25,000
Install New Pump	4	EA	$8,000	$32,000	$16,000
Emergency Backup Genererator	1	LS	$55,000	$55,000	$27,500
New 6-inch PVC Water Main and Fittings	3,100	LF	$80	$248,000	$186,000
New RO Treatment System	1	LS	$500,000	$500,000	$250,000
Surface Restoration	300	SY	$50	$15,000	$0
Connect to Existing Distibution System	1	EA	$1,500	$1,500	$375
Install new SCADA/PLC System	1	LS	$30,000	$30,000	$15,000
Retrofit Exising Treatment Plant Equipment	1	LS	$50,000	$50,000	$0
New Bulk Water Station	1	EA	$140,000	$140,000	$70,000
Temporary Erosion Protection	1	LS	$5,000	$5,000	$0
Layout and Construction Staking	1	LS	$10,000	$10,000	$0
Exploratory Excavation	8	HR	$150	$1,200	$0
Construction Materials Testing	1	%		$17,900	$0
			Construction Estimate	**$1,902,180**	**$889,875**
Water Rights Negotiations					
Water Rights	1	LS	$60,000	$60,000	
Bedrock Surface Investigation	1	LS	$11,000	$11,000	
Hydrogeologic Survey	1	LS	$8,500	$8,500	
			Subtotal	**$1,981,680**	
AIS Compiance-Materials and Project Management			5%	$99,084	
Contingency			15%	$312,115	
Administrative, Legal, & Engineering			25%	$598,220	
Total (rounded to the nearest thousand)				**$2,912,000**	**$856,000**

1. Salvage Value PW Factor @ 0.2% for 20 years

Table 4-11 Power Teton - County Water & Sewer District Preliminary Engineering Report Annual Operations and Maintenance Costs Treatment Alternative T-7 Deep Ground Water Wells				
Description	**Est. Qty.**	**Unit**	**Est. U/C**	**Est. Cost**
Accounting & Auditing	1	LS	$700	$700
Bank Service Charges	1	LS	$0	$0
Chemicals	1	LS	$1,532	$1,532
Dues/Certifications/Training	1	LS	$425	$425
Easement & Water Assessment	1	LS	$227	$227
Fees (Permits, Service, Recording)	1	LS	$774	$774
Insurance & Bonding	1	LS	$2,195	$2,195
Payroll Expense	1	LS	$11,692	$11,692
Postage & Office	1	LS	$980	$980
Professional Fees	1	LS	$0	$0
Repairs	1	LS	$3,000	$3,000
Short Lived Assets	1	LS	$3,600	$3,600
Supplies	1	LS	$1,642	$1,642
Testing Water	1	LS	$1,994	$1,994
Truck Expenses	1	LS	$752	$752
Utilities	1	LS	$5,000	$5,000
Total Annual Operating and Maintenance Costs (rounded to the nearest $100)				**$34,500**
Real Interest Rate	0.2%			
Present Worth for 20 Years @ 0.2% (rounded to the nearest $100)				**$676,000**

1. Expense adjusted to reflect O&M cost specific to Alternative.

Table 2-14 Operations and Maintenance Budget					
Operating Expenses	**FY 2013**	**FY 2014**	**FY 2015**	**FY 2016**	**Operatin**
Accounting & Auditing	$625	$660	$675	$700	$665
Bank Service Charges	---	$19	---	---	$19
Chemicals	$5,018	$6,015	$6,741	$6,128	$5,976
Depreciation	$98,189	$98,303	$100,607	$100,607	$99,427
Dues/Certifications/Training	$425	$425	$425	$425	$425
Easement & Water Assessment	$183	$196	$211	$227	$204
Fees (Permits, Service, Recording)	$756	$920	$768	$774	$805
Insurance & Bonding	$1,779	$1,813	$1,846	$1,995	$1,858
Payroll Expense	$10,451	$11,285	$11,232	$11,692	$11,165
Postage & Office	$1,534	$655	$834	$980	$1,001
Professional Fees	$249	$9,026	$1,000	---	$3,425
Repairs	$1,514	$1,539	$8,980	$7,490	$4,881
Supplies	$57	$1,296	$2,672	$1,642	$1,417
Testing Water	$1,938	$1,849	$2,076	$1,994	$1,964
Truck Expenses	$1,380	$1,282	$1,235	$752	$1,162
Utilities	$7,212	$9,033	$8,343	$8,919	$8,377
Total Operating Expenses	**$131,310**	**$144,316**	**$147,645**	**$144,325**	**#######**

Short - Lived Asset Reserves Alternative T6A Shallow Ground Water South of Muddy Creek			
Asset	**Projected Repair/Replacement[1]**	**Replacement Cost**	**Annual Reserve**
Finished Water Pump	2030	$36,000	$3,600
Total Short-Lived Asset Budget (rounded to nearest $100)			**$3,600**

1. Short-lived assets addressed through planning period. Projected replacement at or longer than 20 years are not included in the total budget.

APPENDIX C

(Revised November 2017)

DISCOUNT RATES FOR COST-EFFECTIVENESS, LEASE PURCHASE, AND RELATED ANALYSES

Effective Dates. This appendix is updated annually. This version of the appendix is valid for calendar year 2018. A copy of the updated appendix can be obtained in electronic form through the OMB home page at https://www.whitehouse.gov/wp-content/uploads/2017/11/Appendix-C.pdf. The text of the Circular is found at https://www.whitehouse.gov/sites/whitehouse.gov/files/omb/circulars/A94/a094.pdf, and a table of past years' rates is located at https://www.whitehouse.gov/wp-content/uploads/2017/11/DISCHIST-2018-1.pdf. Updates of the appendix are also available upon request from OMB's Office of Economic Policy (202-395-3316).

Nominal Discount Rates. A forecast of nominal or market interest rates for calendar year 2018 based on the economic assumptions for the 2019 Budget is presented below. These nominal rates are to be used for discounting nominal flows, which are often encountered in lease-purchase analysis.

Nominal Interest Rates on Treasury Notes and Bonds of Specified Maturities (in percent)

3-Year	5-Year	7-Year	10-Year	20-Year	30-Year
1.0	1.3	1.6	1.8	2.2	2.6

Real Discount Rates. A forecast of real interest rates from which the inflation premium has been removed and based on the economic assumptions from the 2019 Budget is presented below. These real rates are to be used for discounting constant-dollar flows, as is often required in cost-effectiveness analysis.

Real Interest Rates on Treasury Notes and Bonds of Specified Maturities (in percent)

3-Year	5-Year	7-Year	10-Year	20-Year	30-Year
-0.8	-0.6	-0.3	-0.1	0.2	0.6

Analyses of programs with terms different from those presented above may use a linear interpolation. For example, a four-year project can be evaluated with a rate equal to the average of the three-year and five-year rates. Programs with durations longer than 30 years may use the 30-year interest rate.

APPENDIX 4 - F

Alternative S-2 Supporting Documents

Table X-X
Power Teton - County Water & Sewer District Preliminary Engineering Report
Construction Cost Estimate
Water Storage Alternative S-2 New 60,000 Gallon Water Storage Tank

Item	Quantity	Units	Unit Cost	Cost	Salvage Value[1]
Mobilization	5	%		$18,852	$0
Earth Work-Site Grading	1	LS	$155,000	$155,000	$0
Foundation and Footings	1	LS	$95,000	$95,000	$23,750
Site Fencing	1	LS	$1,600	$1,600	$800
14" PVC	75	LF	$80	$6,000	$3,000
14" Gate Valve	1	EA	$4,500	$4,500	$2,250
60,000 Gallon Welded Steel Tank	1	EA	$110,000	$110,000	$27,500
Exploratory Excavation	8	HR	$150	$1,200	$0
Construction Materials Testing	1	%		$3,733	$0
			Construction Estimate	**$395,885**	**$57,300**
AIS Compiance-Materials and Project Management			5%	$19,794.23	
Contingency			10%	$41,567.89	
Administrative, Legal, & Engineering			25%	$114,312	
Total (rounded to the nearest thousand)				**$572,000**	**$56,000**

1. Salvage Value PW Factor @ 0.2% for 20 years

Table 4-13 Power Teton - County Water & Sewer District Preliminary Engineering Report Annual Operations and Maintenance Costs Storage Alternative S-2 New 60,000 Gallon Storage Tank				
Description	**Quanitity**	**Unit**	**Unit Cost**	**Cost**
Accounting & Auditing	1	LS	$700	$700
Bank Service Charges	1	LS	$0	$0
Chemicals	1	LS	$6,128	$6,128
Dues/Certifications/Training	1	LS	$425	$425
Easement & Water Assessment	1	LS	$227	$227
Fees (Permits, Service, Recording)	1	LS	$774	$774
Insurance & Bonding	1	LS	$2,100	$2,100
Payroll Expense	1	LS	$11,692	$11,692
Postage & Office	1	LS	$980	$980
Professional Fees	1	LS	$0	$0
Repairs	1	LS	$8,980	$8,980
Short Lived Assets	1	LS	$900	$900
Supplies	1	LS	$1,642	$1,642
Testing Water	1	LS	$1,994	$1,994
Truck Expenses	1	LS	$752	$752
Utilities	1	LS	$8,919	$8,919
Total Annual Operating and Maintenance Costs (rounded to the nearest $100)				**$46,200**
Real Interest Rate	0.2%			
Present Worth for 20 Years @ 0.2% (rounded to the nearest $100)				**$905,000**

1. Expense adjusted to reflect O&M cost specific to Alternative.

Table 2-14 Operations and Maintenance Budget					
Operating Expenses	**FY 2013**	**FY 2014**	**FY 2015**	**FY 2016**	**Operating**
Accounting & Auditing	$625	$660	$675	$700	$665
Bank Service Charges	---	$19	---	---	$19
Chemicals	$5,018	$6,015	$6,741	$6,128	$5,976
Depreciation	$98,189	$98,303	$100,607	$100,607	$99,427
Dues/Certifications/Training	$425	$425	$425	$425	$425
Easement & Water Assessment	$183	$196	$211	$227	$204
Fees (Permits, Service, Recording)	$756	$920	$768	$774	$805
Insurance & Bonding	$1,779	$1,813	$1,846	$1,995	$1,858
Payroll Expense	$10,451	$11,285	$11,232	$11,692	$11,165
Postage & Office	$1,534	$655	$834	$980	$1,001
Professional Fees	$249	$9,026	$1,000	---	$3,425
Repairs	$1,514	$1,539	$8,980	$7,490	$4,881
Supplies	$57	$1,296	$2,672	$1,642	$1,417
Testing Water	$1,938	$1,849	$2,076	$1,994	$1,964
Truck Expenses	$1,380	$1,282	$1,235	$752	$1,162
Utilities	$7,212	$9,033	$8,343	$8,919	$8,377
Total Operating Expenses	**$131,310**	**$144,316**	**$147,645**	**$144,325**	**$141,899**

Short - Lived Asset Reserves Alternative T6A Shallow Ground Water South of Muddy Creek			
Asset	**Projected Repair/Replacement[1]**	**Replacement Cost**	**Annual Reserve**
Accessories (ladders, hatches, ect.)	2030	$9,000	$900
Total Short-Lived Asset Budget (rounded to nearest $100)			**$900**

1. Short-lived assets addressed through planning period. Projected replacement at or longer than 20 years are not included in the total budget.

APPENDIX C

(Revised November 2017)

DISCOUNT RATES FOR COST-EFFECTIVENESS, LEASE PURCHASE, AND RELATED ANALYSES

Effective Dates. This appendix is updated annually. This version of the appendix is valid for calendar year 2018. A copy of the updated appendix can be obtained in electronic form through the OMB home page at https://www.whitehouse.gov/wp-content/uploads/2017/11/Appendix-C.pdf. The text of the Circular is found at https://www.whitehouse.gov/sites/whitehouse.gov/files/omb/circulars/A94/a094.pdf, and a table of past years' rates is located at https://www.whitehouse.gov/wp-content/uploads/2017/11/DISCHIST-2018-1.pdf. Updates of the appendix are also available upon request from OMB's Office of Economic Policy (202-395-3316).

Nominal Discount Rates. A forecast of nominal or market interest rates for calendar year 2018 based on the economic assumptions for the 2019 Budget is presented below. These nominal rates are to be used for discounting nominal flows, which are often encountered in lease-purchase analysis.

Nominal Interest Rates on Treasury Notes and Bonds of Specified Maturities (in percent)

3-Year	5-Year	7-Year	10-Year	20-Year	30-Year
1.0	1.3	1.6	1.8	2.2	2.6

Real Discount Rates. A forecast of real interest rates from which the inflation premium has been removed and based on the economic assumptions from the 2019 Budget is presented below. These real rates are to be used for discounting constant-dollar flows, as is often required in cost-effectiveness analysis.

Real Interest Rates on Treasury Notes and Bonds of Specified Maturities (in percent)

3-Year	5-Year	7-Year	10-Year	20-Year	30-Year
-0.8	-0.6	-0.3	-0.1	0.2	0.6

Analyses of programs with terms different from those presented above may use a linear interpolation. For example, a four-year project can be evaluated with a rate equal to the average of the three-year and five-year rates. Programs with durations longer than 30 years may use the 30-year interest rate.

APPENDIX 4 - G

Alternative D-3 Supporting Documents

FlexTable: Pipe Table

Current Time: 0.000 hours

Label	Length (Scaled) (ft)	Start Node	Stop Node	Diameter (in)	Material
1st st -01	162	J-26	J-27	6.0	PVC
1st st-02	211	J-28	J-26	6.0	PVC
3rd St	716	J-41	J-7	6.0	PVC
4th S-06	50	J-2	J-11	10.0	Ductile Iron
4th St-01	35	J-36	J-8	8.0	PVC
4th St-02	321	J-8	J-37	8.0	PVC
4th St-03	41	J-37	J-19	8.0	PVC
4th St-04	341	J-19	J-1	8.0	PVC
4th St-05	355	J-1	J-2	10.0	Ductile Iron
4th St-07	662	J-11	J-3	10.0	PVC
6th St-01	342	J-32	J-35	6.0	PVC
6th St-02	354	J-34	J-32	6.0	PVC
7th Rd NE	374	J-40	J-29	6.0	PVC
7th ST-01	328	J-30	J-31	6.0	PVC
Bulk Water Line	123	J-25	J-26	6.0	PVC
Cascade Ave	370	J-2	J-41	6.0	PVC
Central Ave--02	339	J-32	J-21	6.0	PVC
Central Ave-01	27	J-21	J-30	6.0	PVC
Central Ave-03	346	J-32	J-15	6.0	PVC
Central Ave-04	379	J-15	J-37	6.0	PVC
Central Ave-05	747	J-37	J-10	6.0	PVC
Central Ave-06	336	J-10	J-28	6.0	PVC
Central Ave-07	224	J-28	J-29	6.0	PVC
H-01	24	H-01	J-21	6.0	PVC
H-02	24	H-02	J-15	6.0	PVC
H-03	27	H-03	J-10	6.0	PVC
H-04	25	H-04	J-18	6.0	PVC
H-05	25	H-05	J-20	6.0	PVC
H-06	25	H-06	J-17	6.0	PVC
H-07	79	H-07	J-22	6.0	PVC
H-08	25	H-08	J-9	6.0	PVC
H-09	42	H-09	J-13	6.0	PVC
H-10	25	H-10	J-8	6.0	PVC
H-11	25	H-11	J-19	6.0	PVC
H-12	25	H-12	J-11	6.0	PVC
H-13	96	H-13	J-14	6.0	PVC
H-13	25	H-13	J-16	6.0	PVC
H-14	25	H-14	J-12	6.0	PVC
Hill Ave-01	723	J-34	J-1	6.0	PVC
Hill Ave-02	525	J-1	J-18	6.0	PVC
Hill Ave-03	715	J-18	J-20	6.0	PVC
Hill Ave-04	61	J-20	J-40	6.0	PVC
P-39	197	Muddy Creek	Clear Well	6.0	Ductile Iron
P-42	27	Finished Water Pump	Clear Well	4.0	Ductile Iron
P-43	20	Finished Water Pump	J-43	4.0	Ductile Iron

FlexTable: Pipe Table

Current Time: 0.000 hours

Label	Length (Scaled) (ft)	Start Node	Stop Node	Diameter (in)	Material	Hazen-Williams C	Minor Loss Coefficient (Local)	Length (User Defined) (ft)
P-45	73	J-43	J-44	6.0	PVC	150.0	0.000	0
P-46	8,332	J-44	J-23	6.0	PVC	150.0	0.000	0
P-47	118	R-2	PMP-2	1,000.0	PVC	150.0	0.000	0
P-48	11,051	PMP-2	J-44	6.0	PVC	130.0	0.000	0
P-49	1,082	J-40	J-38	6.0	PVC	150.0	0.000	0
P-102	108	J-4	T-1	14.0	PVC	150.0	0.000	0
Pipe-101	48	J-23	J-24	6.0	PVC	150.0	0.000	0
Rainbow-01	328	J-17	J-3	6.0	PVC	150.0	0.000	0
Rainbow-02	44	J-7	J-17	6.0	PVC	150.0	0.000	0
Rainbow-03	19	J-7	J-6	6.0	PVC	130.0	0.000	0
Rainbow-4	11	J-5	J-6	6.0	PVC	150.0	0.000	0
Rainbow-05	745	J-5	J-14	6.0	PVC	150.0	0.000	0
Rainbow-06	91	J-14	J-38	6.0	PVC	150.0	0.000	0
Rainbow-07	330	J-3	J-16	14.0	PVC	150.0	0.000	0
Rainbow-08	1,091	J-16	J-12	14.0	PVC	150.0	0.000	0
Rainbow-09	3,424	J-12	J-4	14.0	PVC	150.0	0.000	0
Teton Ave -05	679	J-22	J-9	6.0	PVC	150.0	0.000	0
Teton Ave -06	10	J-22	J-27	6.0	PVC	150.0	0.000	0
Teton Ave-01	392	J-35	J-31	6.0	PVC	150.0	0.000	0
Teton Ave-07	223	J-24	J-27	6.0	PVC	150.0	0.000	0
Teton-02	356	J-13	J-35	6.0	PVC	150.0	0.000	0
Teton-03	369	J-36	J-13	6.0	PVC	150.0	0.000	0
Teton-04	391	J-9	J-36	6.0	PVC	150.0	0.000	0

FlexTable: Pipe Table

Current Time: 0.000 hours

Hazen-Williams C	Minor Loss Coefficient (Local)	Length (User Defined) (ft)
150.0	0.000	0
150.0	0.000	0
150.0	0.000	0
150.0	0.000	0
150.0	0.000	0
150.0	0.000	0
150.0	0.000	0
150.0	0.000	0
150.0	0.000	0
150.0	0.000	0
150.0	0.000	0
150.0	0.000	0
150.0	0.000	0
150.0	0.000	0
150.0	0.000	0
150.0	0.000	0
150.0	0.000	0
150.0	0.000	0
150.0	0.000	0
150.0	0.000	0
150.0	0.000	0
150.0	0.000	0
150.0	0.000	0
130.0	0.000	0
130.0	0.000	0
130.0	0.000	0
150.0	0.000	0
150.0	0.000	0
150.0	0.000	1
150.0	0.000	12,500
150.0	0.000	0
150.0	0.000	0
150.0	0.000	0
150.0	0.000	0
150.0	0.000	0
150.0	0.000	0
150.0	0.000	0
150.0	0.000	0
150.0	0.000	0
150.0	0.000	0
150.0	0.000	0
150.0	0.000	0
150.0	0.000	0
150.0	0.000	0
150.0	0.000	0
150.0	0.000	0
150.0	0.000	0
150.0	0.000	0
150.0	0.000	0
150.0	0.000	0

FlexTable: Pipe Table

Current Time: 0.000 hours

Hazen-Williams C	Minor Loss Coefficient (Local)	Length (User Defined) (ft)
150.0	0.000	0

FlexTable: Junction Table

Current Time: 0.000 hours

Label	Elevation (ft)	Demand (gpm)	Hydraulic Grade (ft)	Pressure (psi)
J-1	3,678.00	7	3,798.42	52
J-2	3,672.00	7	3,798.42	55
J-3	3,678.50	7	3,798.44	52
J-4	3,772.00	0	3,798.50	11
J-5	3,676.50	7	3,798.42	53
J-6	3,676.50	7	3,798.42	53
J-7	3,676.50	7	3,798.42	53
J-8	3,689.00	0	3,798.42	47
J-9	3,689.00	0	3,798.43	47
J-10	3,687.50	0	3,798.42	48
J-11	3,670.00	0	3,798.43	56
J-12	3,684.00	0	3,798.46	50
J-13	3,688.00	0	3,798.41	48
J-14	3,676.50	0	3,798.41	53
J-15	3,685.00	0	3,798.41	49
J-16	3,680.00	0	3,798.45	51
J-17	3,677.00	0	3,798.42	53
J-18	3,676.00	7	3,798.41	53
J-19	3,686.00	0	3,798.42	49
J-20	3,675.50	0	3,798.41	53
J-21	3,681.50	0	3,798.40	51
J-22	3,690.50	0	3,798.46	47
J-23	3,688.00	7	3,798.56	48
J-24	3,690.50	7	3,798.54	47
J-25	3,688.00	7	3,798.43	48
J-26	3,688.00	7	3,798.43	48
J-27	3,690.50	7	3,798.46	47
J-28	3,686.00	7	3,798.42	49
J-29	3,685.00	7	3,798.42	49
J-30	3,681.50	7	3,798.40	51
J-31	3,687.00	7	3,798.40	48
J-32	3,684.00	7	3,798.40	49
J-34	3,677.00	7	3,798.41	53
J-35	3,685.00	7	3,798.40	49
J-36	3,690.00	7	3,798.42	47
J-37	3,687.00	7	3,798.42	48
J-38	3,676.50	7	3,798.41	53
J-40	3,675.50	7	3,798.41	53
J-41	3,671.50	7	3,798.42	55
J-43	3,645.04	0	3,803.19	68
J-44	3,645.57	0	3,803.15	68

Fire Flow Node FlexTable: Fire Flow Report

Current Time: 0.000 hours

Label	Fire Flow (Needed) (gpm)	Fire Flow (Available) (gpm)	Pressure (Residual Lower Limit) (psi)	Pressure (Calculated Residual) (psi)	Junction w/ Minimum Pressure (System)
H-12	1,000	3,000	20	28	J-4
H-13	1,000	3,000	20	32	J-4
H-14	1,000	3,000	20	34	J-4
H-06	1,000	2,596	20	20	J-4
H-11	1,000	2,451	20	20	J-4
H-10	1,000	2,195	20	20	J-4
H-05	1,000	2,056	20	20	J-4
H-04	1,000	1,975	20	20	J-4
H-02	1,000	1,947	20	20	J-4
H-09	2,000	1,786	20	20	J-4
H-03	1,000	1,770	20	20	J-4
H-08	2,000	1,725	20	20	J-4
H-01	1,000	1,724	20	20	J-4
H-13	1,000	1,640	20	20	J-4
H-07	1,000	1,558	20	20	J-4
J-1	1,000	(N/A)	20	(N/A)	(N/A)
J-2	1,000	(N/A)	20	(N/A)	(N/A)
J-3	1,000	(N/A)	20	(N/A)	(N/A)
J-4	1,000	(N/A)	20	(N/A)	(N/A)
J-5	1,000	(N/A)	20	(N/A)	(N/A)
J-6	1,000	(N/A)	20	(N/A)	(N/A)
J-7	1,000	(N/A)	20	(N/A)	(N/A)
J-8	1,000	(N/A)	20	(N/A)	(N/A)
J-9	1,000	(N/A)	20	(N/A)	(N/A)
J-10	1,000	(N/A)	20	(N/A)	(N/A)
J-11	1,000	(N/A)	20	(N/A)	(N/A)
J-12	1,000	(N/A)	20	(N/A)	(N/A)
J-13	1,000	(N/A)	20	(N/A)	(N/A)
J-14	1,000	(N/A)	20	(N/A)	(N/A)
J-15	1,000	(N/A)	20	(N/A)	(N/A)
J-16	1,000	(N/A)	20	(N/A)	(N/A)
J-17	1,000	(N/A)	20	(N/A)	(N/A)
J-18	1,000	(N/A)	20	(N/A)	(N/A)
J-19	1,000	(N/A)	20	(N/A)	(N/A)
J-20	1,000	(N/A)	20	(N/A)	(N/A)
J-21	1,000	(N/A)	20	(N/A)	(N/A)
J-22	1,000	(N/A)	20	(N/A)	(N/A)
J-23	1,000	(N/A)	20	(N/A)	(N/A)
J-24	1,000	(N/A)	20	(N/A)	(N/A)
J-25	1,000	(N/A)	20	(N/A)	(N/A)
J-26	1,000	(N/A)	20	(N/A)	(N/A)
J-27	1,000	(N/A)	20	(N/A)	(N/A)
J-28	1,000	(N/A)	20	(N/A)	(N/A)
J-29	1,000	(N/A)	20	(N/A)	(N/A)
J-30	1,000	(N/A)	20	(N/A)	(N/A)

Fire Flow Node FlexTable: Fire Flow Report

Current Time: 0.000 hours

Label	Fire Flow (Needed) (gpm)	Fire Flow (Available) (gpm)	Pressure (Residual Lower Limit) (psi)	Pressure (Calculated Residual) (psi)	Junction w/ Minimum Pressure (System)
J-31	1,000	(N/A)	20	(N/A)	(N/A)
J-32	1,000	(N/A)	20	(N/A)	(N/A)
J-34	1,000	(N/A)	20	(N/A)	(N/A)
J-35	1,000	(N/A)	20	(N/A)	(N/A)
J-36	1,000	(N/A)	20	(N/A)	(N/A)
J-37	1,000	(N/A)	20	(N/A)	(N/A)
J-38	1,000	(N/A)	20	(N/A)	(N/A)
J-40	1,000	(N/A)	20	(N/A)	(N/A)
J-41	1,000	(N/A)	20	(N/A)	(N/A)
J-43	1,000	(N/A)	20	(N/A)	(N/A)
J-44	1,000	(N/A)	20	(N/A)	(N/A)

Table 4-16
Power Teton - County Water & Sewer District Preliminary Engineering Report
Construction Cost Estimate
Alternative D-3 New Looping Main

Item	Quantity	Units	Unit Cost	Cost	Salvage Value[1]
Mobilization	5	%		$10,225.00	$0
Connect to Existing Main	2	EA	$1,750	$3,500	$2,625
6-inch PVC	1,080	LF	$80	$86,400	$64,800
6-inch Gate Valve	2	EA	$2,000	$4,000	$3,000
Utility Crossing	1	LS	$3,000	$3,000	$0
Jack and Bore Under BNSF Railroad	1	EA	$90,000	$90,000	$0
Ground Surface Restoration	1	LS	$5,000	$5,000	$0
Layout and Construction Staking	1	LS	$10,000	$10,000	$0
Exploratory Excavation	4	HR	$150	$600	$0
Construction Materials Testing	1	%		$2,000	$0
			Construction Estimate	**$214,725**	**$70,425**
AIS Compliance-Materials and Project Management			2.5%	$5,368	
Contingency			10%	$22,009	
Administrative, Legal, & Engineering			25%	$60,526	
Total (rounded to the nearest thousand)				**$303,000**	**$68,000**

1. Salvage Value PW Factor @ 0.2% for 20 years

Table 4-17 Power Teton-County Water & Sewer District Preliminary Engineering Report Annual Operations and Maintenance Costs Alternative D-3: New Looping Water Main				
Description	**Quantity**	**Unit**	**Unit Cost**	**Cost**
Accounting & Auditing	1	LS	$700	$700
Bank Service Charges	1	LS	$0	$0
Chemicals	1	LS	$6,128	$6,128
Dues/Certifications/Training	1	LS	$425	$425
Easement & Water Assessment	1	LS	$454	$454
Fees (Permits, Service, Recording)	1	LS	$774	$774
Insurance & Bonding	1	LS	$1,995	$1,995
Payroll Expense	1	LS	$11,692	$11,692
Postage & Office	1	LS	$980	$980
Professional Fees	1	LS	$0	$0
Repairs	1	LS	$7,490	$7,490
Short Lived Asset Reserves	1	LS	$0	$0
Supplies	1	LS	$1,642	$1,642
Testing Water	1	LS	$1,994	$1,994
Truck Expenses	1	LS	$752	$752
Utilities	1	LS	$8,919	$8,919
			Total Annual Operating and Maintenance Costs (rounded to the nearest $100)	**$43,900**
Real Interest Rate	0.2%			
			Present Worth for 20 Years @ 0.2% (rounded to the nearest $100)	**$859,900**

1. Expense adjusted to reflect O&M cost specific to Alternative

Table 2-14 Operations and Maintenance Budget					
Operating Expenses	**FY 2013**	**FY 2014**	**FY 2015**	**FY 2016**	**Average Operating Expenses**
Accounting & Auditing	$625	$660	$675	$700	$665
Bank Service Charges	---	$19	---	---	$19
Chemicals	$5,018	$6,015	$6,741	$6,128	$5,976
Depreciation	$98,189	$98,303	$100,607	$100,607	$99,427
Dues/Certifications/Training	$425	$425	$425	$425	$425
Easement & Water Assessment	$183	$196	$211	$227	$204
Fees (Permits, Service, Recording)	$756	$920	$768	$774	$805
Insurance & Bonding	$1,779	$1,813	$1,846	$1,995	$1,858
Payroll Expense	$10,451	$11,285	$11,232	$11,692	$11,165
Postage & Office	$1,534	$655	$834	$980	$1,001
Professional Fees	$249	$9,026	$1,000	---	$3,425
Repairs	$1,514	$1,539	$8,980	$7,490	$4,881
Supplies	$57	$1,296	$2,672	$1,642	$1,417
Testing Water	$1,938	$1,849	$2,076	$1,994	$1,964
Truck Expenses	$1,380	$1,282	$1,235	$752	$1,162
Utilities	$7,212	$9,033	$8,343	$8,919	$8,377
Total Operating Expenses	**$131,310**	**$144,316**	**$147,645**	**$144,325**	**$141,899**

Short - Lived Asset Reserves Alternative D-3: New Looping Water Main			
Asset	**Projected Repair/Replacement[1]**	**nt Cost**	**Reserve**
Booster Pumps	2030	$14,000.00	$1,400.00
Total Short-Lived Asset Budget (rounded to nearest $100)			**$1,400.00**

1. Short-lived assets addressed through planning period. Projected replacement at or longer than 20 years are not included in the

APPENDIX C

(Revised November 2017)

DISCOUNT RATES FOR COST-EFFECTIVENESS, LEASE PURCHASE, AND RELATED ANALYSES

Effective Dates. This appendix is updated annually. This version of the appendix is valid for calendar year 2018. A copy of the updated appendix can be obtained in electronic form through the OMB home page at https://www.whitehouse.gov/wp-content/uploads/2017/11/Appendix-C.pdf. The text of the Circular is found at https://www.whitehouse.gov/sites/whitehouse.gov/files/omb/circulars/A94/a094.pdf, and a table of past years' rates is located at https://www.whitehouse.gov/wp-content/uploads/2017/11/DISCHIST-2018-1.pdf. Updates of the appendix are also available upon request from OMB's Office of Economic Policy (202-395-3316).

Nominal Discount Rates. A forecast of nominal or market interest rates for calendar year 2018 based on the economic assumptions for the 2019 Budget is presented below. These nominal rates are to be used for discounting nominal flows, which are often encountered in lease-purchase analysis.

Nominal Interest Rates on Treasury Notes and Bonds of Specified Maturities (in percent)

3-Year	5-Year	7-Year	10-Year	20-Year	30-Year
1.0	1.3	1.6	1.8	2.2	2.6

Real Discount Rates. A forecast of real interest rates from which the inflation premium has been removed and based on the economic assumptions from the 2019 Budget is presented below. These real rates are to be used for discounting constant-dollar flows, as is often required in cost-effectiveness analysis.

Real Interest Rates on Treasury Notes and Bonds of Specified Maturities (in percent)

3-Year	5-Year	7-Year	10-Year	20-Year	30-Year
-0.8	-0.6	-0.3	-0.1	0.2	0.6

Analyses of programs with terms different from those presented above may use a linear interpolation. For example, a four-year project can be evaluated with a rate equal to the average of the three-year and five-year rates. Programs with durations longer than 30 years may use the 30-year interest rate.

APPENDIX 6 - A

Power CDP Target Rates

COMMUNITY DEVELOPMENT DIVISION

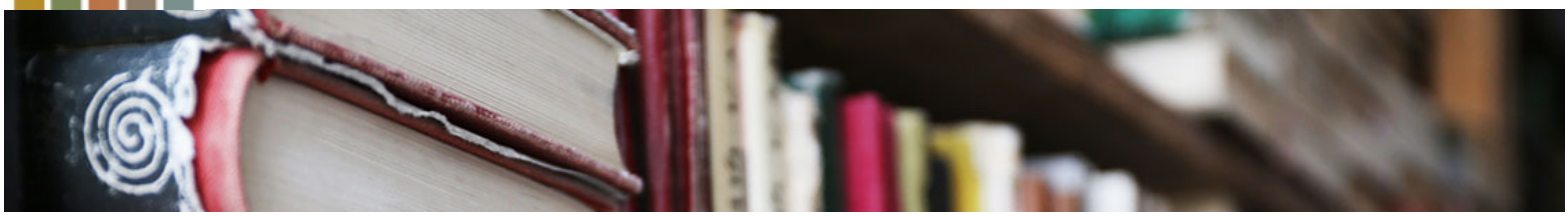

Census & Target Rate Info

Search below for 2015 American Communities Survey data used to calculate target rates when applying to the **Treasure State Endowment Program** and **Community Development Block Group Grant Program.**

Select a Location:

City/Designated location Power CDP ▼ **or** County Choose County ▼

City	Power CDP
County	*Teton County*
Total Population	172
Total Households	74
Median Household Income	$59,286
Low & Moderate Income Percent	31.58%
Percent Poverty	15.5 %

Target Rates

Water & Waste Water	$113.63
Water Only	$69.17
WasteWater Only	$44.46
Solid Waste Only	$14.82

Amounts are computed using the 2015 census and target percentage rationale reviewed biennially by Commerce. The target percentages are:

2.3% combined (water and wastewater)
1.4% for water alone
0.9% for wastewater alone
0.3% for solid waste

For example: Community median household income is $25,000 and the residents pay both water and wastewater rates, the calculation would be: $25,000 times 2.3% divided by 12 equals monthly target rate of $47.92. (25,000 x 2.3%)/12 = $47.92)

Having trouble finding data for your community? Some communities may not be listed in the resources above because the American Community Survey (ACS) did not provide 2015 MHI data for those areas. Please contact us at (406) 841-2770 or email **TSEP** or **CDBG** if you have any questions about this information.

Mapping

To see maps of the City/Town/CDP or County in which you are interested, please go to **http://ceic.mt.gov/**. For more information about the maps or tools available, please contact the Census and Economic Information Bureau at (406) 841-2713 or email **ceic@mt.gov**.

Contacts

Treasure State Endowment Program (TSEP)	406 841-2770
Community Development Block Grant Program (CDBG)	406 841-2770
Census & Economic Information Center	406 841-2740

Definitions

Census Designated Place (CDP): Census designated places (CDPs) have been created for each decennial census as the statistical counterparts of incorporated places. CDPs are delineated to provide census data for concentrations of population, housing, and commercial structures that are identifiable by name but are not within an incorporated place. CDP boundaries usually are defined in cooperation with state, local, and tribal officials. These boundaries, which usually coincide with visible features or the boundary of an adjacent incorporated place or other legal entity boundary, have no legal status, nor do these places have officials elected to serve traditional municipal functions.

Household: A household includes all the people who occupy a housing unit as their usual place of residence.

Income of households: This includes the income of the householder and all other individuals 15 years old and over in the household, whether they are related to the householder or not.

Low and Moderate Income Percent: Low and Moderate Income Percent is calculated by U.S. Housing and Urban Development (HUD) using data from the U.S. Census Bureau's Decennial Census, specifically for the Community Development Block Grant Program (CDBG). LMI families are defined as those families whose income does not exceed 80% of the county median income for the previous year or 80% of the median income of the entire non-metropolitan area of the State of Montana, whichever is higher.

Median income: The median income divides the income distribution into two equal groups, one having incomes above the median, and other having incomes below the median.

Notes: Total Population and Total Households are from Summary File (SF) 1, 100% data. Poverty Rates and Median Household Income are from Summary File (SF) 3, Sample data. Low and Moderate Income Percentage was developed by HUD using Census 2010 data.

Sources: U.S. Census Bureau & HUD
Median Household Income
Census Bureau, American Community Survey 2011 - 2015 Estimates

Total Population & Households
U.S. Census Bureau, 2015 Census - Summary File 1 (SF1) 100% Data

Low to Moderate Income Percent
HUD 2014 Low and Moderate Income Data

Target Rates for 2010 Census Data

View 2010 Census data rates for comparison purposes.

APPENDIX 7 - A

Resolution to Adopt the PER

RESOLUTION NO. 2018-03

WHEREAS, in 2018 the Power-Teton County Water and Sewer District prepared a Water System Preliminary Engineering Report for the purpose of determining and prioritizing their water supply, treatment, storage, and distribution system improvements.

WHEREAS, this Preliminary Engineering Report will be reviewed and updated periodically as needs arise; and

WHEREAS, the Power-Teton County Water and Sewer District Water System Preliminary Engineering Report may be adopted by formal resolution.

NOW, THEREFORE, BE IT RESOLVED that:

The 2018 Power-Teton County Water and Sewer District Water System Preliminary Engineering Report is designated as the official document used to assess the Power-Teton County Water and Sewer District water system facility needs:

BE IT FURTHER RESOLVED that the above designation shall become effective on the 8 day of May, 2018.

Signed: Ross A. Fitzgerald

Name: Ross Fitzgerald

Title: President

Date: 08 MAY - 2018

Attest: Mark A Lehman

Additional Proposal Information

(This is as uploaded, a blank page will show if nothing was submitted)

PTCWSD PER Water Improvment Project 2 of 3 82018.pdf

APPENDIX 1 - A

Property Records

Montana Cadastral

SEARCH

DATA

TOOLS

LEGEND

DISCLAIMER

HELP

Property Record Card

Tax Year 2017

Print

Summary

Primary Information

Property Category: RP
Subcategory: Real Property
Geocode: 31-3372-25-1-01-05-0000
Assessment Code: 0000015075
Primary Owner:
POWER TETON COUNTY WATER & SEWER DIST
PO BOX 176
POWER, MT 59468-0176
PropertyAddress:
COS Parcel: N/A
NOTE: See the Owner tab for all owner information
Certificate of Survey: 805
Subdivision:
Legal Description:
S25, T23 N, R01 W, C.O.S. 805, PARCEL N/A, NE4NE4 COS 805
Last Modified: 1/3/2018 3:48:21 PM

General Property Information

Neighborhood: 231.001.0
Property Type: EP - Exempt Property
Living Units: 0
Levy District: 31-0894-30NHD
Zoning:
Ownership %: 100
Linked Property:
No linked properties exist for this property
Exemptions:
No exemptions exist for this property
Condo Ownership:
General: 0
Limited: 0

Property Factors

Topography: 1
Fronting: 0 - None
Utilities: 0
Parking Type:
Access: 0
Parking Quantity:
Location: 0 - Rural Land
Parking Proximity:

Land Summary

Land Type	Acres	Value
Grazing	0.000	00.00
Fallow	0.000	00.00
Irrigated	0.000	00.00
Continuous Crop	0.000	00.00

Owners

Appraisals

Market Land Info

Dwellings

Other Buildings/Improvements

Commercial

Ag/Forest Land

Montana Cadastral

SEARCH

DATA

TOOLS

LEGEND

DISCLAIMER

HELP

Property Record Card

Tax Year 2017

Print

Summary

Legal Description:
S27, T23 N, R01 W, 000, PARCEL N/A, SE43E4SW4

Last Modified: 1/3/2018 3:57:19 PM

General Property Information

Neighborhood: 201.001.0 — **Property Type:** EP - Exempt Property

Living Units: 0 — **Levy District:** 31-0094-00NHD

Zoning: — **Ownership %:** 100

Linked Property:

No Linked properties exist for this property

Exemptions:

No exemptions exist for this property

Condo Ownership:

General: 0 — **Limited:** 0

Property Factors

Topography: 8 — **Fronting:** 0 None

Utilities: 0 — **Parking Type:**

Access: 0 — **Parking Quantity:**

Location: 0 - Rural Land — **Parking Proximity:**

Land Summary

Land Type	Acres	Value
Grazing	0.000	00.00
Fallow	0.000	00.00
Irrigated	0.000	00.00
Continuous Crop	0.000	00.00
Wild Hay	0.000	00.00
Farmsite	0.000	00.00
ROW	0.000	00.00
NonQual Land	0.000	00.00
Total Ag Land	0.000	00.00
Total Forest Land	0.000	00.00
Total Market Land	0.750	40,371.00

Deed Information:

Deed Date	Book	Page	Recorded Date	Document Number	Document Type
10/5/2006	0132	00117			

Owners

Appraisals

Market Land Info

Dwellings

Other Buildings/Improvements

Commercial

Ag/Forest Land

APPENDIX 1 - B

Uniform Environmental Checklist

UNIFORM ENVIRONMENTAL CHECKLIST

As the engineer that prepared the preliminary engineering report, I Michael O'Brien, PE,
(print name of engineer)
have reviewed the information presented in this checklist and believe that it accurately identifies the environmental resources in the area and the potential impacts that the project could have on those resources. In addition, the required state and federal agencies were provided with the required information about the project and requested to provide comments on the proposed public facility project. Their comments have been incorporated into and attached to the Preliminary Engineering Report.

Engineer's Signature: _____ **Date: March 27, 2018**

Key Letter: N – No Impact **B –** Potentially Beneficial **A –** Potentially Adverse
P – Approval/Permits Required **M –** Mitigation Required

PHYSICAL ENVIRONMENT	
Key **N**	**1. Soil Suitability, Topographic and/or Geologic Constraints (e.g., soil slump, steep slopes, subsidence, seismic activity)** *Comments and Source of Information: The project is not expected to impact soils, topography, or site geology. According to the NRCS Web Soil Survey, the District is dominated by silty clay loam and clay loam. According to well logs provided by the Montana Ground Water Information Center (GWIC), soils consist of clay or silty clay at the surface which is underlain by sand, sandy loams, or sandy clay loams. Weathered shale was encountered below the sand. Deeper well logs indicated black limestone and blue Colorado shale at depths greater than 50 ft. below ground surface (bgs).* *However, TD&H identified in the Preliminary Engineering Report (PER) that while coarse gravel lacking in fines is ideal for ground water transmission, it can make the soil cohesionless, which will make trenching difficult due to the need to lay slopes back. Drilling can also be difficult in the soil type and may require larger rigs which are designed for these soil conditions. While this is certainly achievable, it will increase project construction expense.* USGS Topographic Map, NRCS Web Soil Survey, Montana GWIC
Key **N**	**2. Hazardous Facilities (e.g., power lines, EPA hazardous waste sites, acceptable distance from explosive and flammable hazards including chemical/petrochemical storage tanks, underground fuel storage tanks, and related facilities such as natural gas storage facilities & propane storage tanks)** *Comments and Source of Information: A total of twelve underground storage tank sites (USTs) have been identified in Power, Montana. Four Leaky Underground Storage Tank (LUST) sites have been identified. Three of the LUST sites are located within the District's boundaries; all three of these LUST sites have been classified as "Resolved" by the DEQ. The final LUST site is located approximately 0.35 miles east of the District boundary, and this site has not yet been resolved. Ground water from this LUST site will likely flow toward Muddy Creek; it is not expected to impact the new water supply source (Fairfield/Greenfields Bench) located west of the District.* *There are no Superfund sites, Brownfield sites, or RCRA sites in Power, Montana according to the United States Environmental Protection Agency (US EPA) website, specifically the Cleanups in My Community Map.* Montana DEQ, US EPA RCRA & Brownfields & Superfund & NPL Sites

Key Letter: N – No Impact **B –** Potentially Beneficial **A –** Potentially Adverse
P – Approval/Permits Required **M –** Mitigation Required

Key **N**	**3.**	**Effects of Project on Surrounding Air Quality or Any Kind of Effects of Existing Air Quality on Project (e.g., dust, odors, emissions)** *Comments and Source of Information: Effects to air quality will be temporary during construction activities; no long-term effects are anticipated.* Project Engineer
Key **A**	**4.**	**Groundwater Resources & Aquifers (e.g., quantity, quality, distribution, depth to groundwater, sole source aquifers)** *Comments and Source of Information: Based on the Preliminary Engineering Report for Power-Teton County Water and Sewer District prepared by TD&H Engineering in 2018, the Fairfield/Greenfields aquifer is an important local aquifer. Production for this aquifer is good; some wells have reported yields over 100 gpm. Water levels do decrease during winter, which indicates that recharge may be artificial (likely a result of irrigation).* *The proposed project has the potential to contribute to the local lowering of the water table, especially during winter, drought, or other times of low recharge. However, the aquifer is expected to be able to supply water to the District and all existing water user.* Project Engineer
Key **B**	**5.**	**Surface Water/Water Quality, Quantity & Distribution (e.g., streams, lakes, storm runoff, irrigation systems, canals)** *Comments and Source of Information: Muddy Creek will no longer be the water source for the Power-Teton County Water and Sewer District. Ultimately ground water in the project area drains to Muddy Creek. There should be no significant net effect in changing from Muddy Creek source to the ground water source.* *There should be no effect to water bodies downstream of Muddy Creek.* Project Engineer
Key **N**	**6.**	**Floodplains & Floodplain Management (Identify any floodplains within one mile of the boundary of the project.)** *Comments and Source of Information: The District is unmapped by the Federal Emergency Management Association (FEMA) which indicates that a study has never been conducted in this area.* FEMA
Key **N**	**7.**	**Wetlands Protection (Identify any wetlands within one mile of the boundary of the project.)** *Comments and Source of Information: According to the National Wetlands Inventory developed by the US Fish and Wildlife Service, there are wetlands located on the Fairfield/Greenfields Bench. Source wells are not anticipated to be located near wetlands. The well's cone of depression will not impact wetlands.* US Fish and Wildlife Service

Key Letter: N – No Impact **B –** Potentially Beneficial **A –** Potentially Adverse
P – Approval/Permits Required **M –** Mitigation Required

Key **P**	**8.**	**Agricultural Lands, Production, & Farmland Protection (e.g., grazing, forestry, cropland, prime or unique agricultural lands) (Identify any prime or important farm ground or forest lands within one mile of the boundary of the project.)** *Comments and Source of Information: The recommended new water supply source is the Fairfield/Greenfields Bench. Currently, much of this bench is being used for agriculture. The District will either need to purchase land or acquire an easement for vertical wells and the associated protection zone. The vertical wells would not require much land; however, the protection zone may require a large amount of land. The PER estimates that approximately 40 acres will be required; this may change during final design. The protection zone would represent a use restriction. Agriculture would still be permitted on the land, but the District will be able to control agriculture inputs that could affect the quality of water they will use.* Project Engineer
Key **N**	**9.**	**Vegetation & Wildlife Species & Habitats, Including Fish (e.g., terrestrial, avian and aquatic life and habitats)** *Comments and Source of Information: The US Fish and Wildlife Service identified species of animals that reside in the county and the status of those species. For Teton County, the US Fish and Wildlife Service has listed the Grizzly Bear, Canada Lynx, Red Knot, and Piping Plover as threatened species. Of these, this County is considered critical habitat for the Canada Lynx and the Piping Plover. The National Heritage Program identified one animal species of concern, the Horned Grebe, and no plant species of concern. Due to the minimal area to be impacted by the project, wildlife and vegetation are not expected to be impacted.* *The project is not expected to impact non-endangered vegetation & wildlife species & habitats* *Fish are not expected to be impacted, as no surface waters will be impacted by the proposed project other than the cessation of use of Muddy Creek as a water supply source.* US Fish and Wildlife Service, Montana National Heritage Program
Key **N**	**10.**	**Unique, Endangered, Fragile, or Limited Environmental Resources, Including Endangered Species (e.g., plants, fish, sage grouse, or other wildlife)** *Comments and Source of Information: The US Fish and Wildlife Service identified species of animals that reside in the county and the status of those species. For Teton County, the US Fish and Wildlife Service has listed the Grizzly Bear, Canada Lynx, Red Knot, and Piping Plover as threatened species. Of these, this County is considered critical habitat for the Canada Lynx and the Piping Plover. The National Heritage Program identified one animal species of concern, the Horned Grebe, and no plant species of concern. Due to the minimal area to be impacted by the project, wildlife and vegetation are not expected to be impacted.* *According to the Montana Sage Grouse Habitat Conservation Program Website, the District is not in a Sage Grouse Executive Order area.* US Fish and Wildlife Service, Montana National Heritage Program, Montana Sage Grouse Habitation Conservation Program

Key Letter: N – No Impact **B –** Potentially Beneficial **A –** Potentially Adverse
P – Approval/Permits Required **M –** Mitigation Required

Key **N**	**11.**	**Unique Natural Features (e.g., geologic features)** *Comments and Source of Information: No unique natural features will be impacted by the proposed project.* Project Engineer
Key **N**	**12.**	**Access to, and Quality of, Recreational & Wilderness Activities, Public Lands and Waterways (including Federally Designated Wild & Scenic Rivers), and Public Open Space** *Comments and Source of Information: The proposed project will not affect access to or quality of recreational and wilderness activities, public lands and waterways, or public open space.* Project Engineer
HUMAN POPULATION		
Key **N**	**1.**	**Visual Quality – Coherence, Diversity, Compatibility of Use and Scale, Aesthetics** *Comments and Source of Information: Visual quality will not be impacted by the proposed project.* Project Engineer
Key **N**	**2.**	**Nuisances (e.g., glare, fumes)** *Comments and Source of Information: The construction site will be removed from the community of Power and heavily populated areas. However, during construction activities, temporary increases in noise, debris, and dust are expected. After construction is complete, no long-term nuisances are expected.* Project Engineer
Key **N**	**3.**	**Noise -- suitable separation between noise sensitive activities (such as residential areas) and major noise sources (aircraft, highways & railroads)** *Comments and Source of Information: Although the construction site will be removed from heavily populated areas, a temporary increase in noise is expected during construction activities. Once project construction is complete, no long-term noise is expected.* Project Engineer
Key **N**	**4.**	**Historic Properties, Cultural, and Archaeological Resources** *Comments and Source of Information: The State Historic Preservation Office (SHPO) stated that "As long as the project will be occurring within previously disturbed ground, and there will be no disturbance or alternation to structures over fifty years of age we feel that there is a low likelihood cultural properties will be impacted."* SHPO

Key **N**	**5. Changes in Demographic (population) Characteristics (e.g., quantity, distribution, density)** *Comments and Source of Information: The project will be designed to handle the projected population served by the Power-Teton County Water and Sewer District for a 20-year design life. The District anticipates that the population of Power will double in this time as multiple new subdivisions are a real possibility in Power.* Project Engineer
Key **B**	**6. Environmental Justice – (Does the project avoid placing lower income households in areas where environmental degradation has occurred, such as adjacent to brownfield sites?)** *Comments and Source of Information: The proposed improvements will benefit all users of the Water District. Grant and low interest loans are being pursued in order to minimize the impact to user rates to the greatest extent possible. Once completed, the project will benefit all members of the District. According to the 2015 American Community Survey, Power CDP has a Low and Moderate Income (LMI) Percent of 31.58%.* 2015 American Community Survey, Project Engineer
Key **B**	**7. General Housing Conditions - Quality, Quantity, Affordability** *Comments and Source of Information: The proposed project will greatly improve the general housing conditions in the District. A new water source will provide the community of Power with higher water quality and a more reliable system. In addition, the water system will benefit any potential new subdivisions as Power begins to grow.* Project Engineer
Key **N**	**8. Displacement or Relocation of Businesses or Residents** *Comments and Source of Information: The project will not result in displacement or relocation of businesses or residents.* Project Engineer
Key **B**	**9. Public Health and Safety** *Comments and Source of Information: The proposed project will improve health and safety. Improvements to the District's water source will increase the water quality of the community's potable water as well as increase the reliability of the system. With the existing system, the Water Treatment Plant has faced many challenges with the high TDS water from Muddy Creek clogging and damaging various equipment and complicating treatment of the District's current source water.* Project Engineer
Key **N**	**10. Lead Based Paint and/or Asbestos** *Comments and Source of Information: As part of this project, the existing water treatment system will be abandoned in place in case the District needs to use the building in the future. The treatment plant was built in 2004. There should be no lead based paints in the facility. Prior to damaging any existing building materials, an asbestos inspection shall be conducted by a Montana-accredited asbestos inspector.* Project Engineer
Key **N**	**11. Local Employment & Income Patterns - Quantity and Distribution of Employment, Economic Impact** *Comments and Source of Information: Local employment and income patterns will not be directly impacted by this project. The improved water system will be designed to handle anticipated future growth.* Project Engineer

Key **N**	**12. Local & State Tax Base & Revenues** *Comments and Source of Information: Every effort is being made to minimize impacts to the existing user rates. Should a low interest loan be required to fund this project's, minor increases to the user rates would be required to pay for the loan. The project will not otherwise impact local and state tax base or revenues.* Project Engineer
Key **B**	**13. Educational Facilities - Schools, Colleges, Universities** *Comments and Source of Information: No college or university is currently supplied by the District. The Power School District has a K-12 public school that will benefit from a more reliable drinking water source.* Project Engineer
Key **B** **Key** **N**	**14. Commercial and Industrial Facilities - Production & Activity, Growth or Decline** *Comments and Source of Information: The District does currently serve several commercial or industrial users. A more reliable water source will be of benefit to them and combined with planned future growth of the community may attract business to move into the area.* Project Engineer **15. Health Care – Medical Services** *Comments and Source of Information: The Power-Teton County Water and Sewer District does not serve any medical facilities.* Project Engineer
Key **N**	**16. Social Services – Governmental Services (e.g., demand on)** *Comments and Source of Information: Social services will not be impacted by the proposed project.* Project Engineer
Key **N**	**17. Social Structures & Mores (Standards of Social Conduct/Social Conventions)** *Comments and Source of Information: The project will have no impact of social structures.* Project Engineer
Key **P**	**18. Land Use Compatibility (e.g., growth, land use change, development activity, adjacent land uses and potential conflicts)** *Comments and Source of Information: A land purchase or easement agreement will be required to obtain the land for the recommended new water supply wells and associated protection zones. Approximately 40 acres is anticipated. The land use is not expected to change from agriculture, but the District will be able to control agricultural inputs that could affect the quality of water they will use.* Project Engineer
Key **B**	**19. Energy Resources - Consumption and Conservation** *Comments and Source of Information: The existing treatment plant contains leaking and corroded pipes, failing pumps and clogged valves. The proposed project will abandon the inadequate treatment plant with all of its associated upgrade costs. The new system will eliminate leaking and failing pumps. This will drastically increase the water and energy efficiency of the system.* Project Engineer

Key **N**	**20.**	**Solid Waste Management** *Comments and Source of Information: Solid waste management will not be impacted by the project.* Project Engineer
Key **N**	**21.**	**Wastewater Treatment - Sewage System** *Comments and Source of Information: The District's existing wastewater treatment and sewage system will not be impacted by the project.* Project Engineer
Key **N**	**22.**	**Storm Water – Surface Drainage** *Comments and Source of Information: Storm water will not be impacted by the proposed project.* Project Engineer
Key **B**	**23.**	**Community Water Supply** *Comments and Source of Information: The purpose of this project is to provide a more reliable water source for the District. The project will improve the water quality for the District and provide a more dependable water source.*
Key **N**	**24.**	**Public Safety – Police** *Comments and Source of Information: Public safety will not be impacted by the project.* Project Engineer
Key **B**	**25.**	**Fire Protection – Hazards** *Comments and Source of Information: The existing water distribution system includes fire hydrants and fire protection. As such, the increased reliability of the water system will increase the reliability of the District's fire protection.* Project Engineer
Key **N**	**26.**	**Emergency Medical Services** *Comments and Source of Information: Emergency medical services will not be affected by this project, as the District does not serve any medical facilities.* Project Engineer
Key **N**	**27.**	**Parks, Playgrounds, & Open Space** *Comments and Source of Information: Parks, playgrounds, and open spaces will not be affected by this project.* Project Engineer.
Key **N**	**28.**	**Cultural Facilities, Cultural Uniqueness & Diversity** *Comments and Source of Information: The State Historic Preservation Office (SHPO) stated that they feel there is a low likelihood of impacting cultural properties.* SHPO

Key **N**	**29.**	**Transportation Networks and Traffic Flow Conflicts (e.g., rail; auto including local traffic; airport runway clear zones - avoidance of incompatible land use in airport runway clear zones)** *Comments and Source of Information: Transportation networks including railroad traffic and air traffic, will not be impacted by the proposed project.* Project Engineer
Key **N**	**30.**	**Consistency with Local Ordinances, Resolutions, or Plans (e.g., conformance with local comprehensive plans, zoning, or capital improvement plans)** *Comments and Source of Information: The proposed project is consistent with local ordinances, resolutions, and plans.* Project Engineer
Key **P**	**31.**	**Is There a Regulatory Action on Private Property Rights as a Result of this Project? (consider options that reduce, minimize, or eliminate the regulation of private property rights.)** *Comments and Source of Information: There will not be regulatory action. A purchase or easement agreement with local landowners will be required for the new water supply wells and protection zones. The District will also need to negotiate new water rights.* Project Engineer.

DISTRICT BOUNDARY
WEB SOIL SURVEY

United States Department of Agriculture

Natural Resources Conservation Service

A product of the National Cooperative Soil Survey, a joint effort of the United States Department of Agriculture and other Federal agencies, State agencies including the Agricultural Experiment Stations, and local participants

Custom Soil Resource Report for Choteau-Conrad Area; Parts of Teton and Pondera Counties, Montana

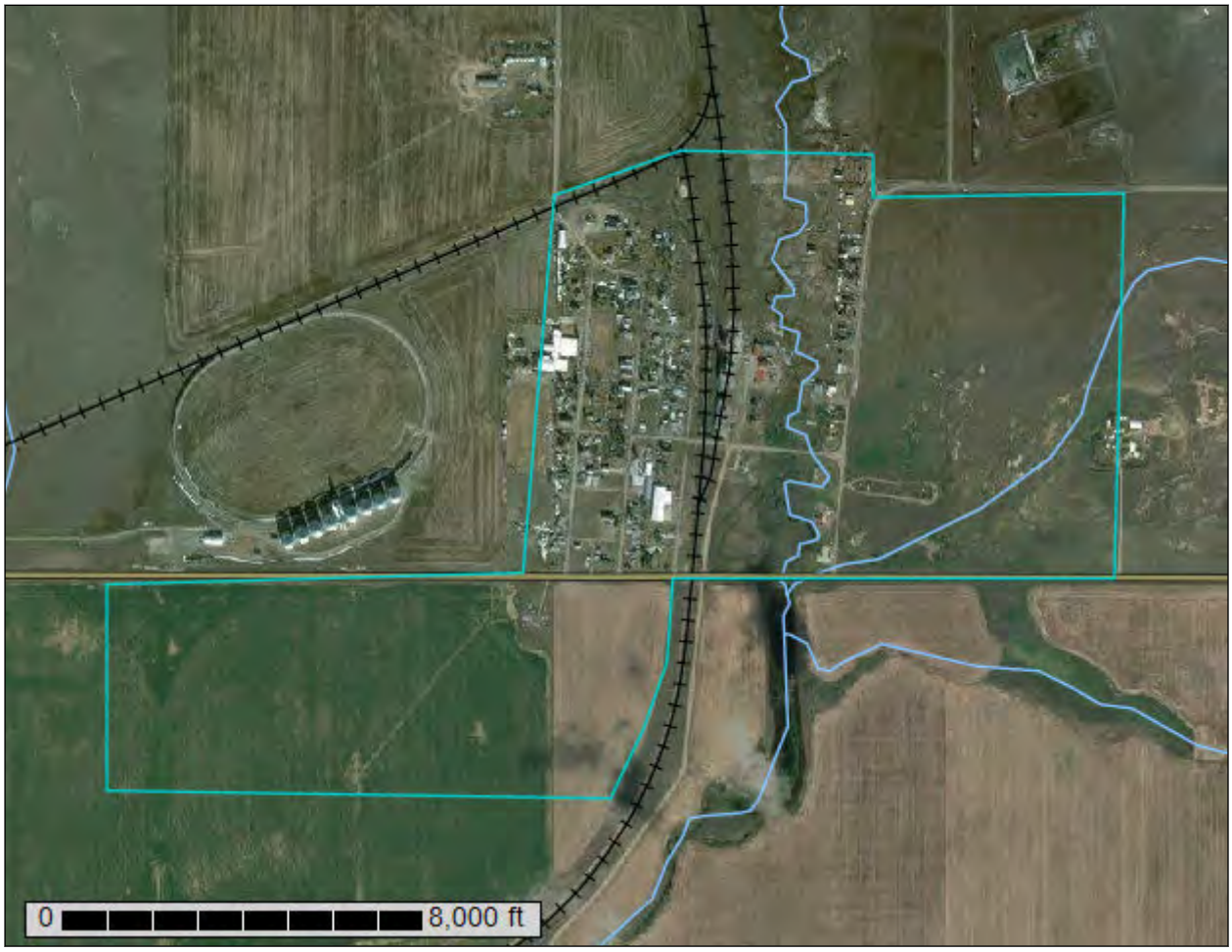

February 20, 2018

Preface

Soil surveys contain information that affects land use planning in survey areas. They highlight soil limitations that affect various land uses and provide information about the properties of the soils in the survey areas. Soil surveys are designed for many different users, including farmers, ranchers, foresters, agronomists, urban planners, community officials, engineers, developers, builders, and home buyers. Also, conservationists, teachers, students, and specialists in recreation, waste disposal, and pollution control can use the surveys to help them understand, protect, or enhance the environment.

Various land use regulations of Federal, State, and local governments may impose special restrictions on land use or land treatment. Soil surveys identify soil properties that are used in making various land use or land treatment decisions. The information is intended to help the land users identify and reduce the effects of soil limitations on various land uses. The landowner or user is responsible for identifying and complying with existing laws and regulations.

Although soil survey information can be used for general farm, local, and wider area planning, onsite investigation is needed to supplement this information in some cases. Examples include soil quality assessments (http://www.nrcs.usda.gov/wps/portal/nrcs/main/soils/health/) and certain conservation and engineering applications. For more detailed information, contact your local USDA Service Center (https://offices.sc.egov.usda.gov/locator/app?agency=nrcs) or your NRCS State Soil Scientist (http://www.nrcs.usda.gov/wps/portal/nrcs/detail/soils/contactus/?cid=nrcs142p2_053951).

Great differences in soil properties can occur within short distances. Some soils are seasonally wet or subject to flooding. Some are too unstable to be used as a foundation for buildings or roads. Clayey or wet soils are poorly suited to use as septic tank absorption fields. A high water table makes a soil poorly suited to basements or underground installations.

The National Cooperative Soil Survey is a joint effort of the United States Department of Agriculture and other Federal agencies, State agencies including the Agricultural Experiment Stations, and local agencies. The Natural Resources Conservation Service (NRCS) has leadership for the Federal part of the National Cooperative Soil Survey.

Information about soils is updated periodically. Updated information is available through the NRCS Web Soil Survey, the site for official soil survey information.

The U.S. Department of Agriculture (USDA) prohibits discrimination in all its programs and activities on the basis of race, color, national origin, age, disability, and where applicable, sex, marital status, familial status, parental status, religion, sexual orientation, genetic information, political beliefs, reprisal, or because all or a part of an individual's income is derived from any public assistance program. (Not all prohibited bases apply to all programs.) Persons with disabilities who require

alternative means for communication of program information (Braille, large print, audiotape, etc.) should contact USDA's TARGET Center at (202) 720-2600 (voice and TDD). To file a complaint of discrimination, write to USDA, Director, Office of Civil Rights, 1400 Independence Avenue, S.W., Washington, D.C. 20250-9410 or call (800) 795-3272 (voice) or (202) 720-6382 (TDD). USDA is an equal opportunity provider and employer.

Contents

Preface.....2
How Soil Surveys Are Made.....5
Soil Map.....8
Soil Map.....9
Legend.....10
Map Unit Legend.....12
Map Unit Descriptions.....12
Choteau-Conrad Area; Parts of Teton and Pondera Counties, Montana.....15
39B—Ethridge silty clay loam, 0 to 4 percent slopes.....15
40B—Kobase silty clay loam, 0 to 4 percent slopes.....16
40C—Kobase silty clay loam, 4 to 8 percent slopes.....18
41B—Richey silty clay loam, 0 to 4 percent slopes.....19
70B—Megonot silty clay loam, 0 to 4 percent slopes.....20
114A—Gerdrum-Absher clay loams, 0 to 2 percent slopes.....22
148C—Megonot-Richey-Tanna clay loams, 2 to 8 percent slopes.....24
150B—Marias-Linnet silty clays, 0 to 4 percent slopes.....27
164B—Scobey-Kevin clay loams, 0 to 4 percent slopes.....29
170C—Abor-Yawdim silty clay loams, 4 to 15 percent slopes.....32
400—Havre-Fairway loams, 0 to 4 percent slopes, rarely flooded.....34
403—Haploborolls-Argiborolls complex, 0 to 4 percent slopes, rarely flooded.....36
540B—Marvan silty clay, wet, 0 to 4 percent slopes.....39
570D—Megonot-Kobase-Yawdim complex, 8 to 15 percent slopes.....41
Soil Information for All Uses.....44
Soil Reports.....44
Land Classifications.....44
Prime and other Important Farmlands.....44
Soil Physical Properties.....46
Engineering Properties.....46
References.....60

How Soil Surveys Are Made

Soil surveys are made to provide information about the soils and miscellaneous areas in a specific area. They include a description of the soils and miscellaneous areas and their location on the landscape and tables that show soil properties and limitations affecting various uses. Soil scientists observed the steepness, length, and shape of the slopes; the general pattern of drainage; the kinds of crops and native plants; and the kinds of bedrock. They observed and described many soil profiles. A soil profile is the sequence of natural layers, or horizons, in a soil. The profile extends from the surface down into the unconsolidated material in which the soil formed or from the surface down to bedrock. The unconsolidated material is devoid of roots and other living organisms and has not been changed by other biological activity.

Currently, soils are mapped according to the boundaries of major land resource areas (MLRAs). MLRAs are geographically associated land resource units that share common characteristics related to physiography, geology, climate, water resources, soils, biological resources, and land uses (USDA, 2006). Soil survey areas typically consist of parts of one or more MLRA.

The soils and miscellaneous areas in a survey area occur in an orderly pattern that is related to the geology, landforms, relief, climate, and natural vegetation of the area. Each kind of soil and miscellaneous area is associated with a particular kind of landform or with a segment of the landform. By observing the soils and miscellaneous areas in the survey area and relating their position to specific segments of the landform, a soil scientist develops a concept, or model, of how they were formed. Thus, during mapping, this model enables the soil scientist to predict with a considerable degree of accuracy the kind of soil or miscellaneous area at a specific location on the landscape.

Commonly, individual soils on the landscape merge into one another as their characteristics gradually change. To construct an accurate soil map, however, soil scientists must determine the boundaries between the soils. They can observe only a limited number of soil profiles. Nevertheless, these observations, supplemented by an understanding of the soil-vegetation-landscape relationship, are sufficient to verify predictions of the kinds of soil in an area and to determine the boundaries.

Soil scientists recorded the characteristics of the soil profiles that they studied. They noted soil color, texture, size and shape of soil aggregates, kind and amount of rock fragments, distribution of plant roots, reaction, and other features that enable them to identify soils. After describing the soils in the survey area and determining their properties, the soil scientists assigned the soils to taxonomic classes (units). Taxonomic classes are concepts. Each taxonomic class has a set of soil characteristics with precisely defined limits. The classes are used as a basis for comparison to classify soils systematically. Soil taxonomy, the system of taxonomic classification used in the United States, is based mainly on the kind and character of soil properties and the arrangement of horizons within the profile. After the soil

scientists classified and named the soils in the survey area, they compared the individual soils with similar soils in the same taxonomic class in other areas so that they could confirm data and assemble additional data based on experience and research.

The objective of soil mapping is not to delineate pure map unit components; the objective is to separate the landscape into landforms or landform segments that have similar use and management requirements. Each map unit is defined by a unique combination of soil components and/or miscellaneous areas in predictable proportions. Some components may be highly contrasting to the other components of the map unit. The presence of minor components in a map unit in no way diminishes the usefulness or accuracy of the data. The delineation of such landforms and landform segments on the map provides sufficient information for the development of resource plans. If intensive use of small areas is planned, onsite investigation is needed to define and locate the soils and miscellaneous areas.

Soil scientists make many field observations in the process of producing a soil map. The frequency of observation is dependent upon several factors, including scale of mapping, intensity of mapping, design of map units, complexity of the landscape, and experience of the soil scientist. Observations are made to test and refine the soil-landscape model and predictions and to verify the classification of the soils at specific locations. Once the soil-landscape model is refined, a significantly smaller number of measurements of individual soil properties are made and recorded. These measurements may include field measurements, such as those for color, depth to bedrock, and texture, and laboratory measurements, such as those for content of sand, silt, clay, salt, and other components. Properties of each soil typically vary from one point to another across the landscape.

Observations for map unit components are aggregated to develop ranges of characteristics for the components. The aggregated values are presented. Direct measurements do not exist for every property presented for every map unit component. Values for some properties are estimated from combinations of other properties.

While a soil survey is in progress, samples of some of the soils in the area generally are collected for laboratory analyses and for engineering tests. Soil scientists interpret the data from these analyses and tests as well as the field-observed characteristics and the soil properties to determine the expected behavior of the soils under different uses. Interpretations for all of the soils are field tested through observation of the soils in different uses and under different levels of management. Some interpretations are modified to fit local conditions, and some new interpretations are developed to meet local needs. Data are assembled from other sources, such as research information, production records, and field experience of specialists. For example, data on crop yields under defined levels of management are assembled from farm records and from field or plot experiments on the same kinds of soil.

Predictions about soil behavior are based not only on soil properties but also on such variables as climate and biological activity. Soil conditions are predictable over long periods of time, but they are not predictable from year to year. For example, soil scientists can predict with a fairly high degree of accuracy that a given soil will have a high water table within certain depths in most years, but they cannot predict that a high water table will always be at a specific level in the soil on a specific date.

After soil scientists located and identified the significant natural bodies of soil in the survey area, they drew the boundaries of these bodies on aerial photographs and

identified each as a specific map unit. Aerial photographs show trees, buildings, fields, roads, and rivers, all of which help in locating boundaries accurately.

Soil Map

The soil map section includes the soil map for the defined area of interest, a list of soil map units on the map and extent of each map unit, and cartographic symbols displayed on the map. Also presented are various metadata about data used to produce the map, and a description of each soil map unit.

Custom Soil Resource Report
Soil Map

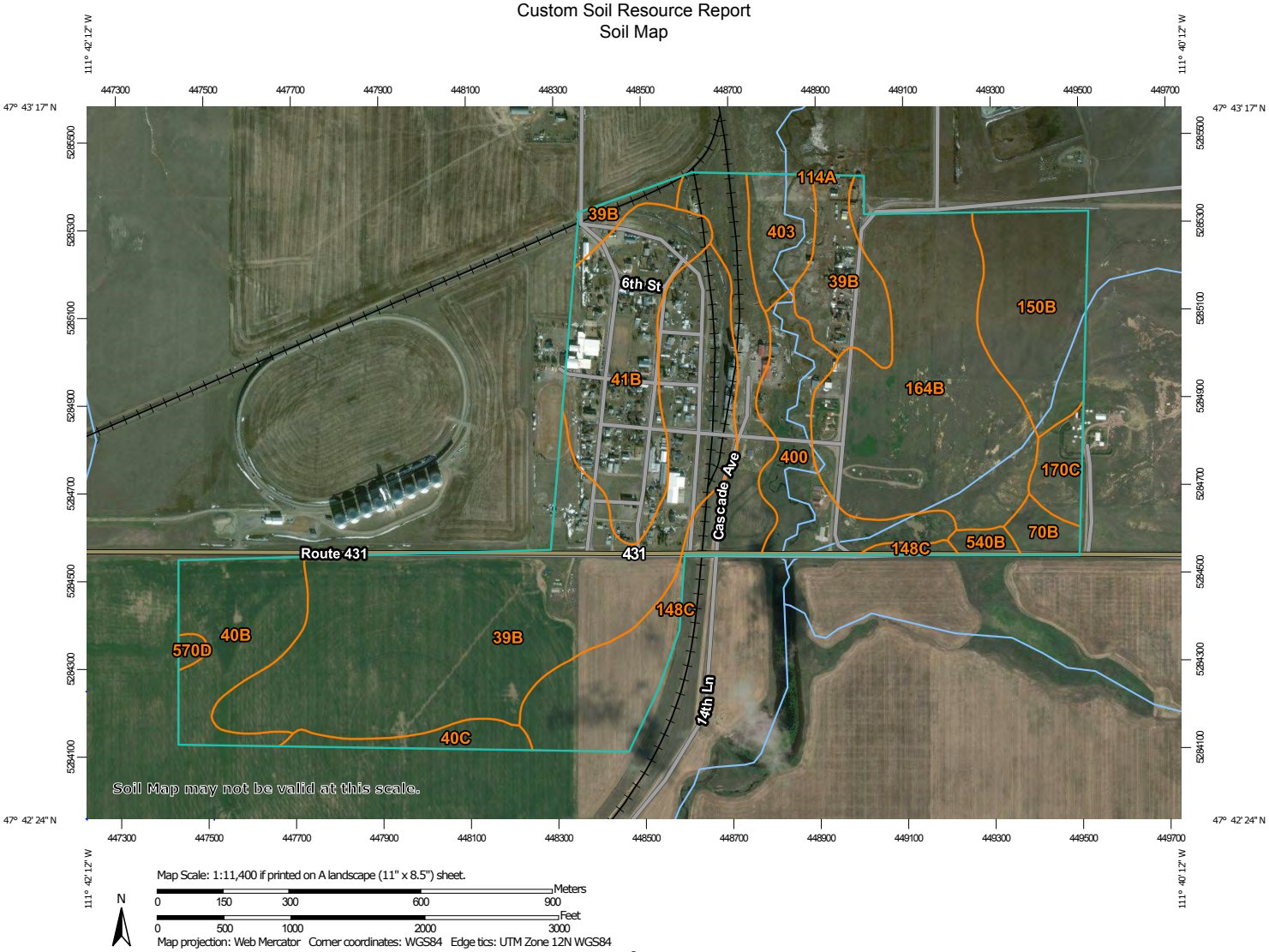

Map Scale: 1:11,400 if printed on A landscape (11" x 8.5") sheet.

N

Meters: 0 150 300 600 900

Feet: 0 500 1000 2000 3000

Map projection: Web Mercator Corner coordinates: WGS84 Edge tics: UTM Zone 12N WGS84

MAP LEGEND

Area of Interest (AOI)
- Area of Interest (AOI)

Soils
- Soil Map Unit Polygons
- Soil Map Unit Lines
- Soil Map Unit Points

Special Point Features
- Blowout
- Borrow Pit
- Clay Spot
- Closed Depression
- Gravel Pit
- Gravelly Spot
- Landfill
- Lava Flow
- Marsh or swamp
- Mine or Quarry
- Miscellaneous Water
- Perennial Water
- Rock Outcrop
- Saline Spot
- Sandy Spot
- Severely Eroded Spot
- Sinkhole
- Slide or Slip
- Sodic Spot
- Spoil Area
- Stony Spot
- Very Stony Spot
- Wet Spot
- Other
- Special Line Features

Water Features
- Streams and Canals

Transportation
- Rails
- Interstate Highways
- US Routes
- Major Roads
- Local Roads

Background
- Aerial Photography

MAP INFORMATION

The soil surveys that comprise your AOI were mapped at 1:24,000.

Warning: Soil Map may not be valid at this scale.

Enlargement of maps beyond the scale of mapping can cause misunderstanding of the detail of mapping and accuracy of soil line placement. The maps do not show the small areas of contrasting soils that could have been shown at a more detailed scale.

Please rely on the bar scale on each map sheet for map measurements.

Source of Map: Natural Resources Conservation Service
Web Soil Survey URL:
Coordinate System: Web Mercator (EPSG:3857)

Maps from the Web Soil Survey are based on the Web Mercator projection, which preserves direction and shape but distorts distance and area. A projection that preserves area, such as the Albers equal-area conic projection, should be used if more accurate calculations of distance or area are required.

This product is generated from the USDA-NRCS certified data as of the version date(s) listed below.

Soil Survey Area: Choteau-Conrad Area; Parts of Teton and Pondera Counties, Montana
Survey Area Data: Version 15, Oct 3, 2017

Soil map units are labeled (as space allows) for map scales 1:50,000 or larger.

Date(s) aerial images were photographed: May 4, 2013—Feb 15, 2017

The orthophoto or other base map on which the soil lines were compiled and digitized probably differs from the background

MAP LEGEND

MAP INFORMATION

imagery displayed on these maps. As a result, some minor shifting of map unit boundaries may be evident.

Map Unit Legend

Map Unit Symbol	Map Unit Name	Acres in AOI	Percent of AOI
39B	Ethridge silty clay loam, 0 to 4 percent slopes	124.4	34.2%
40B	Kobase silty clay loam, 0 to 4 percent slopes	22.1	6.1%
40C	Kobase silty clay loam, 4 to 8 percent slopes	5.5	1.5%
41B	Richey silty clay loam, 0 to 4 percent slopes	37.2	10.2%
70B	Megonot silty clay loam, 0 to 4 percent slopes	3.8	1.0%
114A	Gerdrum-Absher clay loams, 0 to 2 percent slopes	0.0	0.0%
148C	Megonot-Richey-Tanna clay loams, 2 to 8 percent slopes	41.4	11.4%
150B	Marias-Linnet silty clays, 0 to 4 percent slopes	26.2	7.2%
164B	Scobey-Kevin clay loams, 0 to 4 percent slopes	62.2	17.1%
170C	Abor-Yawdim silty clay loams, 4 to 15 percent slopes	5.8	1.6%
400	Havre-Fairway loams, 0 to 4 percent slopes, rarely flooded	22.5	6.2%
403	Haploborolls-Argiborolls complex, 0 to 4 percent slopes, rarely flooded	9.7	2.7%
540B	Marvan silty clay, wet, 0 to 4 percent slopes	2.1	0.6%
570D	Megonot-Kobase-Yawdim complex, 8 to 15 percent slopes	1.0	0.3%
Totals for Area of Interest		**363.8**	**100.0%**

Map Unit Descriptions

The map units delineated on the detailed soil maps in a soil survey represent the soils or miscellaneous areas in the survey area. The map unit descriptions, along with the maps, can be used to determine the composition and properties of a unit.

A map unit delineation on a soil map represents an area dominated by one or more major kinds of soil or miscellaneous areas. A map unit is identified and named according to the taxonomic classification of the dominant soils. Within a taxonomic class there are precisely defined limits for the properties of the soils. On the landscape, however, the soils are natural phenomena, and they have the characteristic variability of all natural phenomena. Thus, the range of some

observed properties may extend beyond the limits defined for a taxonomic class. Areas of soils of a single taxonomic class rarely, if ever, can be mapped without including areas of other taxonomic classes. Consequently, every map unit is made up of the soils or miscellaneous areas for which it is named and some minor components that belong to taxonomic classes other than those of the major soils.

Most minor soils have properties similar to those of the dominant soil or soils in the map unit, and thus they do not affect use and management. These are called noncontrasting, or similar, components. They may or may not be mentioned in a particular map unit description. Other minor components, however, have properties and behavioral characteristics divergent enough to affect use or to require different management. These are called contrasting, or dissimilar, components. They generally are in small areas and could not be mapped separately because of the scale used. Some small areas of strongly contrasting soils or miscellaneous areas are identified by a special symbol on the maps. If included in the database for a given area, the contrasting minor components are identified in the map unit descriptions along with some characteristics of each. A few areas of minor components may not have been observed, and consequently they are not mentioned in the descriptions, especially where the pattern was so complex that it was impractical to make enough observations to identify all the soils and miscellaneous areas on the landscape.

The presence of minor components in a map unit in no way diminishes the usefulness or accuracy of the data. The objective of mapping is not to delineate pure taxonomic classes but rather to separate the landscape into landforms or landform segments that have similar use and management requirements. The delineation of such segments on the map provides sufficient information for the development of resource plans. If intensive use of small areas is planned, however, onsite investigation is needed to define and locate the soils and miscellaneous areas.

An identifying symbol precedes the map unit name in the map unit descriptions. Each description includes general facts about the unit and gives important soil properties and qualities.

Soils that have profiles that are almost alike make up a *soil series*. Except for differences in texture of the surface layer, all the soils of a series have major horizons that are similar in composition, thickness, and arrangement.

Soils of one series can differ in texture of the surface layer, slope, stoniness, salinity, degree of erosion, and other characteristics that affect their use. On the basis of such differences, a soil series is divided into *soil phases*. Most of the areas shown on the detailed soil maps are phases of soil series. The name of a soil phase commonly indicates a feature that affects use or management. For example, Alpha silt loam, 0 to 2 percent slopes, is a phase of the Alpha series.

Some map units are made up of two or more major soils or miscellaneous areas. These map units are complexes, associations, or undifferentiated groups.

A *complex* consists of two or more soils or miscellaneous areas in such an intricate pattern or in such small areas that they cannot be shown separately on the maps. The pattern and proportion of the soils or miscellaneous areas are somewhat similar in all areas. Alpha-Beta complex, 0 to 6 percent slopes, is an example.

An *association* is made up of two or more geographically associated soils or miscellaneous areas that are shown as one unit on the maps. Because of present or anticipated uses of the map units in the survey area, it was not considered practical or necessary to map the soils or miscellaneous areas separately. The

pattern and relative proportion of the soils or miscellaneous areas are somewhat similar. Alpha-Beta association, 0 to 2 percent slopes, is an example.

An *undifferentiated group* is made up of two or more soils or miscellaneous areas that could be mapped individually but are mapped as one unit because similar interpretations can be made for use and management. The pattern and proportion of the soils or miscellaneous areas in a mapped area are not uniform. An area can be made up of only one of the major soils or miscellaneous areas, or it can be made up of all of them. Alpha and Beta soils, 0 to 2 percent slopes, is an example.

Some surveys include *miscellaneous areas*. Such areas have little or no soil material and support little or no vegetation. Rock outcrop is an example.

Choteau-Conrad Area; Parts of Teton and Pondera Counties, Montana

39B—Ethridge silty clay loam, 0 to 4 percent slopes

Map Unit Setting

National map unit symbol: cprx
Elevation: 3,200 to 4,000 feet
Mean annual precipitation: 11 to 14 inches
Mean annual air temperature: 39 to 45 degrees F
Frost-free period: 105 to 125 days
Farmland classification: Prime farmland if irrigated

Map Unit Composition

Ethridge and similar soils: 85 percent
Minor components: 15 percent
Estimates are based on observations, descriptions, and transects of the mapunit.

Description of Ethridge

Setting

Landform: Stream terraces
Down-slope shape: Linear
Across-slope shape: Linear

Typical profile

Ap - 0 to 6 inches: silty clay loam
Bt - 6 to 19 inches: silty clay
Bk - 19 to 48 inches: silty clay loam
Bky - 48 to 60 inches: silty clay loam

Properties and qualities

Slope: 0 to 4 percent
Depth to restrictive feature: More than 80 inches
Natural drainage class: Well drained
Capacity of the most limiting layer to transmit water (Ksat): Moderately low to moderately high (0.06 to 0.20 in/hr)
Depth to water table: More than 80 inches
Frequency of flooding: None
Frequency of ponding: None
Calcium carbonate, maximum in profile: 15 percent
Gypsum, maximum in profile: 3 percent
Salinity, maximum in profile: Nonsaline to slightly saline (0.0 to 4.0 mmhos/cm)
Sodium adsorption ratio, maximum in profile: 5.0
Available water storage in profile: High (about 9.8 inches)

Interpretive groups

Land capability classification (irrigated): 3e
Land capability classification (nonirrigated): 3e
Hydrologic Soil Group: C
Ecological site: Clayey (Cy) 10-14" p.z. (R052XN162MT)
Hydric soil rating: No

Minor Components

Kobase

Percent of map unit: 6 percent

Landform: Alluvial fans
Down-slope shape: Linear
Across-slope shape: Linear
Ecological site: Clayey (Cy) 10-14" p.z. (R052XN162MT)
Hydric soil rating: No

Richey

Percent of map unit: 5 percent
Landform: Alluvial fans
Down-slope shape: Linear
Across-slope shape: Linear
Ecological site: Clayey (Cy) 10-14" p.z. (R052XN162MT)
Hydric soil rating: No

Marias

Percent of map unit: 4 percent
Landform: Alluvial fans
Down-slope shape: Linear
Across-slope shape: Linear
Ecological site: Clayey (Cy) 10-14" p.z. (R052XN162MT)
Hydric soil rating: No

40B—Kobase silty clay loam, 0 to 4 percent slopes

Map Unit Setting

National map unit symbol: cps9
Elevation: 3,200 to 4,000 feet
Mean annual precipitation: 11 to 14 inches
Mean annual air temperature: 39 to 45 degrees F
Frost-free period: 105 to 125 days
Farmland classification: Farmland of statewide importance

Map Unit Composition

Kobase and similar soils: 90 percent
Minor components: 10 percent
Estimates are based on observations, descriptions, and transects of the mapunit.

Description of Kobase

Setting

Landform: Alluvial fans
Down-slope shape: Linear
Across-slope shape: Linear

Typical profile

A - 0 to 6 inches: silty clay loam
Bw - 6 to 24 inches: silty clay
Bk - 24 to 28 inches: clay
Bky - 28 to 36 inches: clay
By - 36 to 60 inches: clay

Properties and qualities

Slope: 0 to 4 percent
Depth to restrictive feature: More than 80 inches
Natural drainage class: Well drained
Capacity of the most limiting layer to transmit water (Ksat): Moderately low to moderately high (0.06 to 0.20 in/hr)
Depth to water table: More than 80 inches
Frequency of flooding: None
Frequency of ponding: None
Calcium carbonate, maximum in profile: 15 percent
Gypsum, maximum in profile: 5 percent
Salinity, maximum in profile: Nonsaline to slightly saline (0.0 to 4.0 mmhos/cm)
Sodium adsorption ratio, maximum in profile: 10.0
Available water storage in profile: High (about 9.7 inches)

Interpretive groups

Land capability classification (irrigated): 4e
Land capability classification (nonirrigated): 4e
Hydrologic Soil Group: C
Ecological site: Clayey (Cy) 10-14" p.z. (R052XN162MT)
Hydric soil rating: No

Minor Components

Marias

Percent of map unit: 4 percent
Landform: Alluvial fans
Down-slope shape: Linear
Across-slope shape: Linear
Ecological site: Clayey (Cy) 10-14" p.z. (R052XN162MT)
Hydric soil rating: No

Ethridge

Percent of map unit: 4 percent
Landform: Alluvial fans
Down-slope shape: Linear
Across-slope shape: Linear
Ecological site: Clayey (Cy) 10-14" p.z. (R052XN162MT)
Hydric soil rating: No

Abor

Percent of map unit: 2 percent
Landform: Plains
Down-slope shape: Linear
Across-slope shape: Linear
Ecological site: Clayey (Cy) 10-14" p.z. (R052XN162MT)
Hydric soil rating: No

40C—Kobase silty clay loam, 4 to 8 percent slopes

Map Unit Setting

National map unit symbol: cpsb
Elevation: 3,200 to 4,000 feet
Mean annual precipitation: 11 to 14 inches
Mean annual air temperature: 39 to 45 degrees F
Frost-free period: 105 to 125 days
Farmland classification: Farmland of statewide importance

Map Unit Composition

Kobase and similar soils: 90 percent
Minor components: 10 percent
Estimates are based on observations, descriptions, and transects of the mapunit.

Description of Kobase

Setting

Landform: Alluvial fans
Down-slope shape: Linear
Across-slope shape: Linear

Typical profile

A - 0 to 6 inches: silty clay loam
Bw - 6 to 24 inches: silty clay
Bk - 24 to 28 inches: clay
Bky - 28 to 36 inches: clay
By - 36 to 60 inches: clay

Properties and qualities

Slope: 4 to 8 percent
Depth to restrictive feature: More than 80 inches
Natural drainage class: Well drained
Capacity of the most limiting layer to transmit water (Ksat): Moderately low to moderately high (0.06 to 0.20 in/hr)
Depth to water table: More than 80 inches
Frequency of flooding: None
Frequency of ponding: None
Calcium carbonate, maximum in profile: 15 percent
Gypsum, maximum in profile: 5 percent
Salinity, maximum in profile: Nonsaline to slightly saline (0.0 to 4.0 mmhos/cm)
Sodium adsorption ratio, maximum in profile: 10.0
Available water storage in profile: High (about 9.7 inches)

Interpretive groups

Land capability classification (irrigated): 4e
Land capability classification (nonirrigated): 4e
Hydrologic Soil Group: C
Ecological site: Clayey (Cy) 10-14" p.z. (R052XN162MT)
Hydric soil rating: No

Minor Components

Ethridge

Percent of map unit: 5 percent
Landform: Alluvial fans
Down-slope shape: Linear
Across-slope shape: Linear
Ecological site: Clayey (Cy) 10-14" p.z. (R052XN162MT)
Hydric soil rating: No

Marias

Percent of map unit: 3 percent
Landform: Alluvial fans
Down-slope shape: Linear
Across-slope shape: Linear
Ecological site: Clayey (Cy) 10-14" p.z. (R052XN162MT)
Hydric soil rating: No

Abor

Percent of map unit: 2 percent
Landform: Plains
Down-slope shape: Linear
Across-slope shape: Linear
Ecological site: Clayey (Cy) 10-14" p.z. (R052XN162MT)
Hydric soil rating: No

41B—Richey silty clay loam, 0 to 4 percent slopes

Map Unit Setting

National map unit symbol: cpsf
Elevation: 3,200 to 4,200 feet
Mean annual precipitation: 11 to 14 inches
Mean annual air temperature: 39 to 45 degrees F
Frost-free period: 105 to 125 days
Farmland classification: Farmland of statewide importance

Map Unit Composition

Richey and similar soils: 85 percent
Minor components: 15 percent
Estimates are based on observations, descriptions, and transects of the mapunit.

Description of Richey

Setting

Landform: Alluvial fans
Down-slope shape: Linear
Across-slope shape: Linear

Typical profile

Ap - 0 to 7 inches: silty clay loam

Bw - 7 to 16 inches: silty clay loam
Bk - 16 to 36 inches: silty clay loam
By - 36 to 60 inches: silty clay loam

Properties and qualities

Slope: 0 to 4 percent
Depth to restrictive feature: More than 80 inches
Natural drainage class: Well drained
Capacity of the most limiting layer to transmit water (Ksat): Moderately low to moderately high (0.06 to 0.20 in/hr)
Depth to water table: More than 80 inches
Frequency of flooding: None
Frequency of ponding: None
Calcium carbonate, maximum in profile: 15 percent
Gypsum, maximum in profile: 5 percent
Salinity, maximum in profile: Nonsaline to very slightly saline (0.0 to 3.0 mmhos/cm)
Available water storage in profile: Moderate (about 8.8 inches)

Interpretive groups

Land capability classification (irrigated): 3e
Land capability classification (nonirrigated): 3e
Hydrologic Soil Group: C
Ecological site: Clayey (Cy) 10-14" p.z. (R052XN162MT)
Hydric soil rating: No

Minor Components

Ethridge

Percent of map unit: 9 percent
Landform: Alluvial fans
Down-slope shape: Linear
Across-slope shape: Linear
Ecological site: Clayey (Cy) 10-14" p.z. (R052XN162MT)
Hydric soil rating: No

Nunemaker

Percent of map unit: 6 percent
Landform: Till plains
Down-slope shape: Linear
Across-slope shape: Linear
Ecological site: Clayey (Cy) 10-14" p.z. (R052XN162MT)
Hydric soil rating: No

70B—Megonot silty clay loam, 0 to 4 percent slopes

Map Unit Setting

National map unit symbol: cpy3
Elevation: 3,200 to 4,200 feet
Mean annual precipitation: 11 to 14 inches
Mean annual air temperature: 39 to 45 degrees F

Frost-free period: 105 to 125 days
Farmland classification: Not prime farmland

Map Unit Composition

Megonot and similar soils: 90 percent
Minor components: 10 percent
Estimates are based on observations, descriptions, and transects of the mapunit.

Description of Megonot

Setting

Landform: Plains
Down-slope shape: Linear
Across-slope shape: Linear

Typical profile

A - 0 to 5 inches: silty clay loam
Bw - 5 to 12 inches: silty clay loam
Bk - 12 to 21 inches: silty clay
By - 21 to 32 inches: channery silty clay
Cr - 32 to 60 inches: weathered bedrock

Properties and qualities

Slope: 0 to 4 percent
Depth to restrictive feature: 20 to 40 inches to paralithic bedrock
Natural drainage class: Well drained
Capacity of the most limiting layer to transmit water (Ksat): Moderately low to moderately high (0.06 to 0.20 in/hr)
Depth to water table: More than 80 inches
Frequency of flooding: None
Frequency of ponding: None
Calcium carbonate, maximum in profile: 15 percent
Gypsum, maximum in profile: 5 percent
Salinity, maximum in profile: Nonsaline to very slightly saline (0.0 to 2.0 mmhos/cm)
Available water storage in profile: Very low (about 2.7 inches)

Interpretive groups

Land capability classification (irrigated): None specified
Land capability classification (nonirrigated): 4e
Hydrologic Soil Group: D
Ecological site: Clayey (Cy) 10-14" p.z. (R052XN162MT)
Hydric soil rating: No

Minor Components

Tanna

Percent of map unit: 4 percent
Landform: Plains
Down-slope shape: Linear
Across-slope shape: Linear
Ecological site: Clayey (Cy) 10-14" p.z. (R052XN162MT)
Hydric soil rating: No

Kobase

Percent of map unit: 3 percent
Landform: Alluvial fans

Down-slope shape: Linear
Across-slope shape: Linear
Ecological site: Clayey (Cy) 10-14" p.z. (R052XN162MT)
Hydric soil rating: No

Abor

Percent of map unit: 2 percent
Landform: Plains
Down-slope shape: Linear
Across-slope shape: Linear
Ecological site: Clayey (Cy) 10-14" p.z. (R052XN162MT)
Hydric soil rating: No

Yawdim

Percent of map unit: 1 percent
Landform: Hills
Down-slope shape: Linear
Across-slope shape: Linear
Ecological site: Shallow Clay (SwC) 10-14" p.z. (R052XN179MT)
Hydric soil rating: No

114A—Gerdrum-Absher clay loams, 0 to 2 percent slopes

Map Unit Setting

National map unit symbol: cpfj
Elevation: 3,200 to 4,200 feet
Mean annual precipitation: 12 to 14 inches
Mean annual air temperature: 34 to 45 degrees F
Frost-free period: 105 to 125 days
Farmland classification: Not prime farmland

Map Unit Composition

Gerdrum and similar soils: 50 percent
Absher and similar soils: 35 percent
Minor components: 15 percent
Estimates are based on observations, descriptions, and transects of the mapunit.

Description of Gerdrum

Setting

Landform: Stream terraces
Down-slope shape: Linear
Across-slope shape: Linear

Typical profile

E - 0 to 3 inches: clay loam
Btn - 3 to 15 inches: clay
Btkn - 15 to 25 inches: clay
Bknyz - 25 to 36 inches: silty clay loam
Bnyz - 36 to 60 inches: silty clay

Properties and qualities

Slope: 0 to 2 percent
Depth to restrictive feature: More than 80 inches
Natural drainage class: Well drained
Capacity of the most limiting layer to transmit water (Ksat): Very low to moderately low (0.00 to 0.06 in/hr)
Depth to water table: More than 80 inches
Frequency of flooding: None
Frequency of ponding: None
Calcium carbonate, maximum in profile: 15 percent
Gypsum, maximum in profile: 5 percent
Salinity, maximum in profile: Moderately saline to strongly saline (8.0 to 16.0 mmhos/cm)
Sodium adsorption ratio, maximum in profile: 20.0
Available water storage in profile: Moderate (about 6.3 inches)

Interpretive groups

Land capability classification (irrigated): None specified
Land capability classification (nonirrigated): 6s
Hydrologic Soil Group: D
Ecological site: Claypan (Cp) 10-14" p.z. (R052XN086MT)
Hydric soil rating: No

Description of Absher

Setting

Landform: Alluvial fans
Down-slope shape: Linear
Across-slope shape: Linear

Typical profile

E - 0 to 2 inches: clay loam
Btn - 2 to 9 inches: clay
Bknyz - 9 to 60 inches: silty clay

Properties and qualities

Slope: 0 to 2 percent
Depth to restrictive feature: More than 80 inches
Natural drainage class: Moderately well drained
Capacity of the most limiting layer to transmit water (Ksat): Very low to moderately low (0.00 to 0.06 in/hr)
Depth to water table: More than 80 inches
Frequency of flooding: None
Frequency of ponding: None
Calcium carbonate, maximum in profile: 15 percent
Gypsum, maximum in profile: 5 percent
Salinity, maximum in profile: Strongly saline (16.0 to 30.0 mmhos/cm)
Sodium adsorption ratio, maximum in profile: 70.0
Available water storage in profile: Low (about 5.5 inches)

Interpretive groups

Land capability classification (irrigated): None specified
Land capability classification (nonirrigated): 7s
Hydrologic Soil Group: D
Ecological site: Dense Clay (DC) 10-14" p.z. (R052XN172MT)
Hydric soil rating: No

Minor Components

Creed

Percent of map unit: 8 percent
Landform: Stream terraces
Down-slope shape: Linear
Across-slope shape: Linear
Ecological site: Claypan (Cp) 10-14" p.z. (R052XN086MT)
Hydric soil rating: No

Marvan

Percent of map unit: 5 percent
Landform: Alluvial fans
Down-slope shape: Linear
Across-slope shape: Linear
Ecological site: Clayey (Cy) 10-14" p.z. (R052XN162MT)
Hydric soil rating: No

Mckenzie

Percent of map unit: 2 percent
Landform: Depressions
Down-slope shape: Linear
Across-slope shape: Linear
Ecological site: Overflow (Ov) 10-14" p.z. (R052XN166MT)
Hydric soil rating: Yes

148C—Megonot-Richey-Tanna clay loams, 2 to 8 percent slopes

Map Unit Setting

National map unit symbol: cph8
Elevation: 3,400 to 4,000 feet
Mean annual precipitation: 11 to 14 inches
Mean annual air temperature: 39 to 45 degrees F
Frost-free period: 105 to 125 days
Farmland classification: Farmland of statewide importance

Map Unit Composition

Megonot and similar soils: 35 percent
Richey and similar soils: 30 percent
Tanna and similar soils: 20 percent
Minor components: 15 percent
Estimates are based on observations, descriptions, and transects of the mapunit.

Description of Megonot

Setting

Landform: Plains
Down-slope shape: Linear
Across-slope shape: Linear

Typical profile

A - 0 to 6 inches: clay loam
Bw - 6 to 12 inches: silty clay loam
Bk - 12 to 21 inches: silty clay
By - 21 to 32 inches: channery silty clay
Cr - 32 to 60 inches: weathered bedrock

Properties and qualities

Slope: 2 to 8 percent
Depth to restrictive feature: 20 to 40 inches to paralithic bedrock
Natural drainage class: Well drained
Capacity of the most limiting layer to transmit water (Ksat): Moderately low to moderately high (0.06 to 0.20 in/hr)
Depth to water table: More than 80 inches
Frequency of flooding: None
Frequency of ponding: None
Calcium carbonate, maximum in profile: 15 percent
Gypsum, maximum in profile: 5 percent
Salinity, maximum in profile: Nonsaline to very slightly saline (0.0 to 2.0 mmhos/cm)
Available water storage in profile: Low (about 3.9 inches)

Interpretive groups

Land capability classification (irrigated): None specified
Land capability classification (nonirrigated): 4e
Hydrologic Soil Group: D
Ecological site: Clayey (Cy) 10-14" p.z. (R052XN162MT)
Hydric soil rating: No

Description of Richey

Setting

Landform: Alluvial fans
Down-slope shape: Linear
Across-slope shape: Linear

Typical profile

A - 0 to 6 inches: clay loam
Bw - 6 to 16 inches: silty clay loam
Bk - 16 to 36 inches: silty clay loam
By - 36 to 60 inches: silty clay loam

Properties and qualities

Slope: 2 to 8 percent
Depth to restrictive feature: More than 80 inches
Natural drainage class: Well drained
Capacity of the most limiting layer to transmit water (Ksat): Moderately low to moderately high (0.06 to 0.20 in/hr)
Depth to water table: More than 80 inches
Frequency of flooding: None
Frequency of ponding: None
Calcium carbonate, maximum in profile: 15 percent
Gypsum, maximum in profile: 5 percent
Salinity, maximum in profile: Nonsaline to very slightly saline (0.0 to 3.0 mmhos/cm)
Available water storage in profile: Moderate (about 8.7 inches)

Interpretive groups

Land capability classification (irrigated): None specified
Land capability classification (nonirrigated): 3e
Hydrologic Soil Group: C
Ecological site: Clayey (Cy) 10-14" p.z. (R052XN162MT)
Hydric soil rating: No

Description of Tanna

Setting

Landform: Plains
Down-slope shape: Linear
Across-slope shape: Linear

Typical profile

A - 0 to 6 inches: clay loam
Bt - 6 to 11 inches: silty clay loam
Bk - 11 to 25 inches: silty clay loam
Bky - 25 to 35 inches: silty clay loam
Cr - 35 to 60 inches: unweathered bedrock

Properties and qualities

Slope: 2 to 8 percent
Depth to restrictive feature: 20 to 40 inches to paralithic bedrock
Natural drainage class: Well drained
Capacity of the most limiting layer to transmit water (Ksat): Moderately low to moderately high (0.06 to 0.20 in/hr)
Depth to water table: More than 80 inches
Frequency of flooding: None
Frequency of ponding: None
Calcium carbonate, maximum in profile: 15 percent
Gypsum, maximum in profile: 3 percent
Salinity, maximum in profile: Nonsaline to very slightly saline (0.0 to 3.9 mmhos/cm)
Available water storage in profile: Low (about 4.4 inches)

Interpretive groups

Land capability classification (irrigated): None specified
Land capability classification (nonirrigated): 3e
Hydrologic Soil Group: D
Ecological site: Clayey (Cy) 10-14" p.z. (R052XN162MT)
Hydric soil rating: No

Minor Components

Ethridge

Percent of map unit: 7 percent
Landform: Alluvial fans
Down-slope shape: Linear
Across-slope shape: Linear
Ecological site: Clayey (Cy) 10-14" p.z. (R052XN162MT)
Hydric soil rating: No

Kevin

Percent of map unit: 5 percent
Landform: Till plains
Down-slope shape: Linear

Across-slope shape: Linear
Ecological site: Silty (Si) 10-14" p.z. (R052XN161MT)
Hydric soil rating: No

Scobey

Percent of map unit: 3 percent
Landform: Till plains
Down-slope shape: Linear
Across-slope shape: Linear
Ecological site: Silty (Si) 10-14" p.z. (R052XN161MT)
Hydric soil rating: No

150B—Marias-Linnet silty clays, 0 to 4 percent slopes

Map Unit Setting

National map unit symbol: cphc
Elevation: 3,300 to 4,000 feet
Mean annual precipitation: 11 to 14 inches
Mean annual air temperature: 34 to 45 degrees F
Frost-free period: 105 to 125 days
Farmland classification: Not prime farmland

Map Unit Composition

Marias and similar soils: 55 percent
Linnet and similar soils: 35 percent
Minor components: 10 percent
Estimates are based on observations, descriptions, and transects of the mapunit.

Description of Marias

Setting

Landform: Till plains
Down-slope shape: Linear
Across-slope shape: Linear

Typical profile

A - 0 to 5 inches: silty clay
Bw - 5 to 11 inches: silty clay
Bss - 11 to 29 inches: silty clay
Bssy - 29 to 60 inches: silty clay

Properties and qualities

Slope: 0 to 4 percent
Depth to restrictive feature: More than 80 inches
Natural drainage class: Well drained
Capacity of the most limiting layer to transmit water (Ksat): Very low to moderately low (0.00 to 0.06 in/hr)
Depth to water table: More than 80 inches

Frequency of flooding: None
Frequency of ponding: None
Calcium carbonate, maximum in profile: 10 percent
Gypsum, maximum in profile: 6 percent
Salinity, maximum in profile: Nonsaline to slightly saline (0.0 to 4.0 mmhos/cm)
Sodium adsorption ratio, maximum in profile: 10.0
Available water storage in profile: Moderate (about 8.5 inches)

Interpretive groups

Land capability classification (irrigated): 4e
Land capability classification (nonirrigated): 4e
Hydrologic Soil Group: D
Ecological site: Clayey (Cy) 10-14" p.z. (R052XN162MT)
Hydric soil rating: No

Description of Linnet

Setting

Landform: Till plains
Down-slope shape: Linear
Across-slope shape: Linear

Typical profile

A - 0 to 5 inches: silty clay
Bt - 5 to 13 inches: silty clay
Bk - 13 to 48 inches: silty clay
BCy - 48 to 60 inches: clay

Properties and qualities

Slope: 0 to 4 percent
Depth to restrictive feature: More than 80 inches
Natural drainage class: Well drained
Capacity of the most limiting layer to transmit water (Ksat): Moderately low to moderately high (0.06 to 0.20 in/hr)
Depth to water table: More than 80 inches
Frequency of flooding: None
Frequency of ponding: None
Calcium carbonate, maximum in profile: 10 percent
Gypsum, maximum in profile: 5 percent
Salinity, maximum in profile: Nonsaline to slightly saline (0.0 to 4.0 mmhos/cm)
Sodium adsorption ratio, maximum in profile: 13.0
Available water storage in profile: High (about 9.0 inches)

Interpretive groups

Land capability classification (irrigated): 4e
Land capability classification (nonirrigated): 4e
Hydrologic Soil Group: C
Ecological site: Clayey (Cy) 10-14" p.z. (R052XN162MT)
Hydric soil rating: No

Minor Components

Ethridge

Percent of map unit: 6 percent
Landform: Till plains
Down-slope shape: Linear
Across-slope shape: Linear

Ecological site: Clayey (Cy) 10-14" p.z. (R052XN162MT)
Hydric soil rating: No

Mckenzie

Percent of map unit: 2 percent
Landform: Depressions
Down-slope shape: Linear
Across-slope shape: Linear
Ecological site: Overflow (Ov) 10-14" p.z. (R052XN166MT)
Hydric soil rating: Yes

Lothair

Percent of map unit: 2 percent
Landform: Alluvial fans
Down-slope shape: Linear
Across-slope shape: Linear
Ecological site: Clayey (Cy) 10-14" p.z. (R052XN162MT)
Hydric soil rating: No

164B—Scobey-Kevin clay loams, 0 to 4 percent slopes

Map Unit Setting

National map unit symbol: 2t3kb
Elevation: 2,490 to 3,800 feet
Mean annual precipitation: 10 to 14 inches
Mean annual air temperature: 39 to 45 degrees F
Frost-free period: 105 to 125 days
Farmland classification: Prime farmland if irrigated

Map Unit Composition

Scobey and similar soils: 50 percent
Kevin and similar soils: 35 percent
Minor components: 15 percent
Estimates are based on observations, descriptions, and transects of the mapunit.

Description of Scobey

Setting

Landform: Flats
Landform position (three-dimensional): Talf
Down-slope shape: Linear
Across-slope shape: Linear
Parent material: Clayey till

Typical profile

Ap - 0 to 6 inches: clay loam
Bt - 6 to 15 inches: clay
Bk1 - 15 to 29 inches: clay loam
Bk2 - 29 to 43 inches: clay loam
BCyz - 43 to 61 inches: clay loam

Cz - 61 to 79 inches: clay loam

Properties and qualities

Slope: 0 to 4 percent
Depth to restrictive feature: More than 80 inches
Natural drainage class: Well drained
Capacity of the most limiting layer to transmit water (Ksat): Moderately low to moderately high (0.06 to 0.20 in/hr)
Depth to water table: More than 80 inches
Frequency of flooding: None
Frequency of ponding: None
Calcium carbonate, maximum in profile: 14 percent
Gypsum, maximum in profile: 5 percent
Salinity, maximum in profile: Very slightly saline to moderately saline (2.0 to 8.0 mmhos/cm)
Sodium adsorption ratio, maximum in profile: 12.0
Available water storage in profile: High (about 9.8 inches)

Interpretive groups

Land capability classification (irrigated): 2e
Land capability classification (nonirrigated): 3e
Hydrologic Soil Group: C
Ecological site: Loamy (Lo) Dry Grassland (R052XY032MT), Loamy (Lo) Dry Shrubland (R052XY712MT), Silty (Si) 10-14" p.z. (R052XN161MT)
Hydric soil rating: No

Description of Kevin

Setting

Landform: Flats
Landform position (three-dimensional): Rise
Down-slope shape: Linear
Across-slope shape: Linear
Parent material: Fine-loamy till

Typical profile

Ap - 0 to 6 inches: clay loam
Bt - 6 to 9 inches: clay loam
Bk1 - 9 to 23 inches: clay loam
Bk2 - 23 to 41 inches: clay loam
BCyz - 41 to 58 inches: clay loam
Cz - 58 to 79 inches: clay loam

Properties and qualities

Slope: 0 to 4 percent
Depth to restrictive feature: More than 80 inches
Natural drainage class: Well drained
Capacity of the most limiting layer to transmit water (Ksat): Moderately low to moderately high (0.06 to 0.20 in/hr)
Depth to water table: More than 80 inches
Frequency of flooding: None
Frequency of ponding: None
Calcium carbonate, maximum in profile: 14 percent
Gypsum, maximum in profile: 5 percent
Salinity, maximum in profile: Very slightly saline to moderately saline (2.0 to 8.0 mmhos/cm)
Sodium adsorption ratio, maximum in profile: 12.0

Available water storage in profile: High (about 10.0 inches)

Interpretive groups

Land capability classification (irrigated): 2e
Land capability classification (nonirrigated): 3e
Hydrologic Soil Group: C
Ecological site: Loamy (Lo) Dry Grassland (R052XY032MT), Loamy (Lo) Dry Shrubland (R052XY712MT), Silty (Si) 10-14" p.z. (R052XN161MT)
Hydric soil rating: No

Minor Components

Hillon

Percent of map unit: 8 percent
Landform: Rises
Landform position (two-dimensional): Summit, shoulder
Down-slope shape: Convex
Across-slope shape: Linear
Ecological site: Limy (Ly) Dry Grassland (R052XY030MT), Limy (Ly) Dry Shrubland (R052XY710MT), Silty (Si) 10-14" p.z. (R052XN161MT)
Hydric soil rating: No

Elloam

Percent of map unit: 3 percent
Landform: Flats
Landform position (three-dimensional): Dip
Down-slope shape: Linear
Across-slope shape: Linear
Ecological site: Thin Claypan (Tcp) Dry Grassland (R052XY165MT), Thin Claypan (Tcp) Dry Shrubland (R052XY731MT), Claypan (Cp) 10-14" p.z. (R052XN086MT)
Hydric soil rating: No

Nishon

Percent of map unit: 2 percent
Landform: Depressions
Down-slope shape: Concave
Across-slope shape: Concave
Ecological site: Recharge Closed Depression (Cdr) (R052XY071MT), Overflow (Ov) 10-14" p.z. (R052XN166MT)
Hydric soil rating: Yes

Acel

Percent of map unit: 2 percent
Landform: Swales
Down-slope shape: Concave
Across-slope shape: Linear
Ecological site: Swale (Se) Dry Grassland (R052XY062MT), Swale (Se) Dry Shrubland (R052XY730MT), Clayey (Cy) 10-14" p.z. (R052XN162MT)
Hydric soil rating: No

170C—Abor-Yawdim silty clay loams, 4 to 15 percent slopes

Map Unit Setting

National map unit symbol: cpj8
Elevation: 3,200 to 4,200 feet
Mean annual precipitation: 11 to 14 inches
Mean annual air temperature: 39 to 46 degrees F
Frost-free period: 105 to 125 days
Farmland classification: Not prime farmland

Map Unit Composition

Abor and similar soils: 50 percent
Yawdim and similar soils: 35 percent
Minor components: 15 percent
Estimates are based on observations, descriptions, and transects of the mapunit.

Description of Abor

Setting

Landform: Plains
Down-slope shape: Linear
Across-slope shape: Linear

Typical profile

A - 0 to 5 inches: silty clay loam
Bss - 5 to 14 inches: silty clay
Bssky - 14 to 30 inches: silty clay
Cr - 30 to 60 inches: unweathered bedrock

Properties and qualities

Slope: 4 to 15 percent
Depth to restrictive feature: 20 to 40 inches to paralithic bedrock
Natural drainage class: Well drained
Capacity of the most limiting layer to transmit water (Ksat): Very low to moderately low (0.00 to 0.06 in/hr)
Depth to water table: More than 80 inches
Frequency of flooding: None
Frequency of ponding: None
Calcium carbonate, maximum in profile: 15 percent
Gypsum, maximum in profile: 5 percent
Salinity, maximum in profile: Nonsaline to slightly saline (0.0 to 4.0 mmhos/cm)
Available water storage in profile: Low (about 4.6 inches)

Interpretive groups

Land capability classification (irrigated): None specified
Land capability classification (nonirrigated): 4e
Hydrologic Soil Group: D
Ecological site: Clayey (Cy) 10-14" p.z. (R052XN162MT)
Hydric soil rating: No

Description of Yawdim

Setting

Landform: Hills
Down-slope shape: Linear
Across-slope shape: Linear

Typical profile

A - 0 to 5 inches: silty clay loam
C - 5 to 16 inches: silty clay loam
Cr - 16 to 60 inches: weathered bedrock

Properties and qualities

Slope: 4 to 15 percent
Depth to restrictive feature: 10 to 20 inches to paralithic bedrock
Natural drainage class: Well drained
Capacity of the most limiting layer to transmit water (Ksat): Moderately low to moderately high (0.06 to 0.20 in/hr)
Depth to water table: More than 80 inches
Frequency of flooding: None
Frequency of ponding: None
Calcium carbonate, maximum in profile: 10 percent
Available water storage in profile: Very low (about 2.8 inches)

Interpretive groups

Land capability classification (irrigated): None specified
Land capability classification (nonirrigated): 6e
Hydrologic Soil Group: D
Ecological site: Shallow Clay (SwC) 10-14" p.z. (R052XN179MT)
Hydric soil rating: No

Minor Components

Kobase

Percent of map unit: 4 percent
Landform: Alluvial fans
Down-slope shape: Linear
Across-slope shape: Linear
Ecological site: Clayey (Cy) 10-14" p.z. (R052XN162MT)
Hydric soil rating: No

Tanna

Percent of map unit: 3 percent
Landform: Plains
Down-slope shape: Linear
Across-slope shape: Linear
Ecological site: Clayey (Cy) 10-14" p.z. (R052XN162MT)
Hydric soil rating: No

Marvan

Percent of map unit: 2 percent
Landform: Alluvial fans
Down-slope shape: Linear
Across-slope shape: Linear
Ecological site: Clayey (Cy) 10-14" p.z. (R052XN162MT)
Hydric soil rating: No

Neldore

Percent of map unit: 2 percent
Landform: Plains
Down-slope shape: Linear
Across-slope shape: Linear
Ecological site: Shallow Clay (SwC) 10-14" p.z. (R052XN179MT)
Hydric soil rating: No

Linnet

Percent of map unit: 2 percent
Landform: Plains
Down-slope shape: Linear
Across-slope shape: Linear
Ecological site: Clayey (Cy) 10-14" p.z. (R052XN162MT)
Hydric soil rating: No

Bascovy

Percent of map unit: 2 percent
Landform: Plains
Down-slope shape: Linear
Across-slope shape: Linear
Ecological site: Clayey (Cy) 10-14" p.z. (R052XN162MT)
Hydric soil rating: No

400—Havre-Fairway loams, 0 to 4 percent slopes, rarely flooded

Map Unit Setting

National map unit symbol: cps1
Elevation: 3,200 to 4,600 feet
Mean annual precipitation: 12 to 14 inches
Mean annual air temperature: 37 to 45 degrees F
Frost-free period: 105 to 125 days
Farmland classification: Farmland of statewide importance

Map Unit Composition

Havre and similar soils: 45 percent
Fairway and similar soils: 40 percent
Minor components: 15 percent
Estimates are based on observations, descriptions, and transects of the mapunit.

Description of Havre

Setting

Landform: Flood plains
Down-slope shape: Linear
Across-slope shape: Linear

Typical profile

A - 0 to 8 inches: loam

C1 - 8 to 20 inches: stratified fine sandy loam to clay loam
C2 - 20 to 60 inches: stratified fine sandy loam to clay loam

Properties and qualities

Slope: 0 to 4 percent
Depth to restrictive feature: More than 80 inches
Natural drainage class: Well drained
Capacity of the most limiting layer to transmit water (Ksat): Moderately high to high (0.57 to 1.98 in/hr)
Depth to water table: More than 80 inches
Frequency of flooding: Rare
Frequency of ponding: None
Calcium carbonate, maximum in profile: 10 percent
Salinity, maximum in profile: Nonsaline to very slightly saline (0.0 to 3.0 mmhos/cm)
Sodium adsorption ratio, maximum in profile: 5.0
Available water storage in profile: High (about 9.7 inches)

Interpretive groups

Land capability classification (irrigated): None specified
Land capability classification (nonirrigated): 4e
Hydrologic Soil Group: B
Ecological site: Silty (Si) 10-14" p.z. (R052XN161MT)
Hydric soil rating: No

Description of Fairway

Setting

Landform: Flood plains
Down-slope shape: Linear
Across-slope shape: Linear

Typical profile

A1 - 0 to 9 inches: loam
A2 - 9 to 15 inches: loam
Cg - 15 to 48 inches: silty clay loam
2C - 48 to 60 inches: very gravelly sand

Properties and qualities

Slope: 0 to 2 percent
Depth to restrictive feature: More than 80 inches
Natural drainage class: Somewhat poorly drained
Capacity of the most limiting layer to transmit water (Ksat): Moderately high to high (0.57 to 1.98 in/hr)
Depth to water table: About 36 to 60 inches
Frequency of flooding: None
Frequency of ponding: None
Calcium carbonate, maximum in profile: 15 percent
Available water storage in profile: Moderate (about 9.0 inches)

Interpretive groups

Land capability classification (irrigated): None specified
Land capability classification (nonirrigated): 3e
Hydrologic Soil Group: B
Ecological site: Subirrigated (Sb) 10-14" p.z. (R052XN169MT)
Hydric soil rating: No

Minor Components

Meadowcreek

Percent of map unit: 5 percent
Landform: Flood plains
Down-slope shape: Linear
Across-slope shape: Linear
Ecological site: Draft Subirrigated (Sb) RRU 46-N 13-19" p.z. (R046XN256MT)
Hydric soil rating: No

Ryell

Percent of map unit: 3 percent
Landform: Flood plains
Down-slope shape: Linear
Across-slope shape: Linear
Ecological site: Silty (Si) 10-14" p.z. (R052XN161MT)
Hydric soil rating: No

Tetonview

Percent of map unit: 3 percent
Landform: Flood plains
Down-slope shape: Linear
Across-slope shape: Linear
Ecological site: Draft Subirrigated (Sb) RRU 46-N 13-19" p.z. (R046XN256MT)
Hydric soil rating: Yes

Rivra

Percent of map unit: 2 percent
Landform: Flood plains
Down-slope shape: Linear
Across-slope shape: Linear
Ecological site: Shallow to Gravel (SwGr) 10-14" p.z. (R052XN176MT)
Hydric soil rating: No

Birchfield

Percent of map unit: 2 percent
Landform: Flood plains
Down-slope shape: Linear
Across-slope shape: Linear
Ecological site: Draft Wet Meadow (WM) RRU 46-N 15-19" p.z. (R046XN262MT)
Hydric soil rating: Yes

403—Haploborolls-Argiborolls complex, 0 to 4 percent slopes, rarely flooded

Map Unit Setting

National map unit symbol: cps4
Elevation: 3,300 to 4,600 feet
Mean annual precipitation: 12 to 19 inches

Mean annual air temperature: 39 to 45 degrees F
Frost-free period: 90 to 120 days
Farmland classification: Not prime farmland

Map Unit Composition

Haploborolls and similar soils: 45 percent
Argiborolls and similar soils: 40 percent
Minor components: 15 percent
Estimates are based on observations, descriptions, and transects of the mapunit.

Description of Haploborolls

Setting

Landform: Flood plains
Down-slope shape: Linear
Across-slope shape: Linear
Parent material: Alluvium

Typical profile

H3 - 12 to 28 inches: gravelly clay loam
H4 - 28 to 60 inches: gravelly clay loam

Properties and qualities

Slope: 0 to 4 percent
Depth to restrictive feature: More than 80 inches
Natural drainage class: Somewhat poorly drained
Capacity of the most limiting layer to transmit water (Ksat): Moderately high (0.20 to 0.57 in/hr)
Depth to water table: About 36 to 60 inches
Frequency of flooding: None
Frequency of ponding: None
Calcium carbonate, maximum in profile: 35 percent
Salinity, maximum in profile: Slightly saline to moderately saline (4.0 to 12.0 mmhos/cm)
Sodium adsorption ratio, maximum in profile: 30.0
Available water storage in profile: Low (about 4.3 inches)

Interpretive groups

Land capability classification (irrigated): 6s
Land capability classification (nonirrigated): 6s
Hydrologic Soil Group: C
Ecological site: Saline Overflow (SOv) 10-14" p.z. (R052XN171MT)
Hydric soil rating: No

Description of Argiborolls

Setting

Landform: Flood plains
Down-slope shape: Linear
Across-slope shape: Linear
Parent material: Alluvium

Typical profile

H1 - 0 to 6 inches: clay loam
H2 - 6 to 13 inches: silty clay
H3 - 13 to 60 inches: silty clay loam

Properties and qualities

Slope: 0 to 4 percent
Depth to restrictive feature: More than 80 inches
Natural drainage class: Well drained
Capacity of the most limiting layer to transmit water (Ksat): Moderately low to moderately high (0.06 to 0.20 in/hr)
Depth to water table: More than 80 inches
Frequency of flooding: None
Frequency of ponding: None
Calcium carbonate, maximum in profile: 15 percent
Gypsum, maximum in profile: 3 percent
Salinity, maximum in profile: Slightly saline to moderately saline (4.0 to 12.0 mmhos/cm)
Sodium adsorption ratio, maximum in profile: 30.0
Available water storage in profile: High (about 9.5 inches)

Interpretive groups

Land capability classification (irrigated): 3e
Land capability classification (nonirrigated): 3e
Hydrologic Soil Group: C
Ecological site: Saline Upland (SU) 10-14" p.z. (R052XN170MT)
Hydric soil rating: No

Minor Components

Lardell

Percent of map unit: 5 percent
Landform: Depressions
Down-slope shape: Linear
Across-slope shape: Linear
Ecological site: Saline Upland (SU) 10-14" p.z. (R052XN170MT)
Hydric soil rating: Yes

Scobey

Percent of map unit: 2 percent
Landform: Till plains
Down-slope shape: Linear
Across-slope shape: Linear
Ecological site: Silty (Si) 10-14" p.z. (R052XN161MT)
Hydric soil rating: No

Kremlin

Percent of map unit: 2 percent
Landform: Alluvial fans
Down-slope shape: Linear
Across-slope shape: Linear
Ecological site: Silty (Si) 10-14" p.z. (R052XN161MT)
Hydric soil rating: No

Richey

Percent of map unit: 2 percent
Landform: Alluvial fans
Down-slope shape: Linear
Across-slope shape: Linear
Ecological site: Clayey (Cy) 10-14" p.z. (R052XN162MT)
Hydric soil rating: No

Ethridge

Percent of map unit: 2 percent
Landform: Alluvial fans
Down-slope shape: Linear
Across-slope shape: Linear
Ecological site: Clayey (Cy) 10-14" p.z. (R052XN162MT)
Hydric soil rating: No

Kevin

Percent of map unit: 2 percent
Landform: Till plains
Down-slope shape: Linear
Across-slope shape: Linear
Ecological site: Silty (Si) 10-14" p.z. (R052XN161MT)
Hydric soil rating: No

540B—Marvan silty clay, wet, 0 to 4 percent slopes

Map Unit Setting

National map unit symbol: cpvt
Elevation: 3,200 to 4,000 feet
Mean annual precipitation: 11 to 14 inches
Mean annual air temperature: 34 to 45 degrees F
Frost-free period: 105 to 125 days
Farmland classification: Not prime farmland

Map Unit Composition

Marvan and similar soils: 85 percent
Minor components: 15 percent
Estimates are based on observations, descriptions, and transects of the mapunit.

Description of Marvan

Setting

Landform: Till plains
Down-slope shape: Linear
Across-slope shape: Linear

Typical profile

A - 0 to 4 inches: silty clay
Bw - 4 to 13 inches: silty clay
Bss - 13 to 20 inches: silty clay
Bnssyz - 20 to 60 inches: clay

Properties and qualities

Slope: 0 to 4 percent
Depth to restrictive feature: More than 80 inches
Natural drainage class: Well drained

Capacity of the most limiting layer to transmit water (Ksat): Very low to moderately low (0.00 to 0.06 in/hr)
Depth to water table: About 30 to 60 inches
Frequency of flooding: None
Frequency of ponding: None
Calcium carbonate, maximum in profile: 10 percent
Gypsum, maximum in profile: 5 percent
Salinity, maximum in profile: Moderately saline to strongly saline (8.0 to 16.0 mmhos/cm)
Sodium adsorption ratio, maximum in profile: 38.0
Available water storage in profile: Moderate (about 8.3 inches)

Interpretive groups
Land capability classification (irrigated): None specified
Land capability classification (nonirrigated): 6w
Hydrologic Soil Group: D
Ecological site: Saline Overflow (SOv) 10-14" p.z. (R052XN171MT)
Hydric soil rating: No

Minor Components

Marias
Percent of map unit: 8 percent
Landform: Till plains
Down-slope shape: Linear
Across-slope shape: Linear
Ecological site: Clayey (Cy) 10-14" p.z. (R052XN162MT)
Hydric soil rating: No

Nobe
Percent of map unit: 5 percent
Landform: Alluvial fans
Down-slope shape: Linear
Across-slope shape: Linear
Ecological site: Saline Upland (SU) 10-14" p.z. (R052XN170MT)
Hydric soil rating: No

Mckenzie
Percent of map unit: 1 percent
Landform: Depressions
Down-slope shape: Linear
Across-slope shape: Linear
Ecological site: Overflow (Ov) 10-14" p.z. (R052XN166MT)
Hydric soil rating: Yes

Lardell
Percent of map unit: 1 percent
Landform: Depressions
Down-slope shape: Linear
Across-slope shape: Linear
Ecological site: Saline Upland (SU) 10-14" p.z. (R052XN170MT)
Hydric soil rating: Yes

570D—Megonot-Kobase-Yawdim complex, 8 to 15 percent slopes

Map Unit Setting

National map unit symbol: cpw5
Elevation: 3,200 to 4,000 feet
Mean annual precipitation: 11 to 14 inches
Mean annual air temperature: 39 to 45 degrees F
Frost-free period: 105 to 125 days
Farmland classification: Not prime farmland

Map Unit Composition

Megonot and similar soils: 35 percent
Kobase and similar soils: 30 percent
Yawdim and similar soils: 20 percent
Minor components: 15 percent
Estimates are based on observations, descriptions, and transects of the mapunit.

Description of Megonot

Setting

Landform: Hills
Down-slope shape: Linear
Across-slope shape: Linear

Typical profile

A - 0 to 6 inches: clay loam
Bw - 6 to 12 inches: silty clay loam
Bk - 12 to 21 inches: silty clay
By - 21 to 32 inches: channery silty clay
Cr - 32 to 60 inches: weathered bedrock

Properties and qualities

Slope: 8 to 15 percent
Depth to restrictive feature: 20 to 40 inches to paralithic bedrock
Natural drainage class: Well drained
Capacity of the most limiting layer to transmit water (Ksat): Moderately low to moderately high (0.06 to 0.20 in/hr)
Depth to water table: More than 80 inches
Frequency of flooding: None
Frequency of ponding: None
Calcium carbonate, maximum in profile: 15 percent
Gypsum, maximum in profile: 5 percent
Salinity, maximum in profile: Nonsaline to very slightly saline (0.0 to 2.0 mmhos/cm)
Available water storage in profile: Low (about 3.9 inches)

Interpretive groups

Land capability classification (irrigated): None specified
Land capability classification (nonirrigated): 4e
Hydrologic Soil Group: D

Ecological site: Clayey (Cy) 10-14" p.z. (R052XN162MT)
Hydric soil rating: No

Description of Kobase

Setting

Landform: Alluvial fans
Down-slope shape: Linear
Across-slope shape: Linear

Typical profile

A - 0 to 6 inches: clay loam
Bw - 6 to 24 inches: silty clay
Bk - 24 to 28 inches: clay
Bky - 28 to 36 inches: clay
By - 36 to 60 inches: clay

Properties and qualities

Slope: 8 to 15 percent
Depth to restrictive feature: More than 80 inches
Natural drainage class: Well drained
Capacity of the most limiting layer to transmit water (Ksat): Moderately low to moderately high (0.06 to 0.20 in/hr)
Depth to water table: More than 80 inches
Frequency of flooding: None
Frequency of ponding: None
Calcium carbonate, maximum in profile: 15 percent
Gypsum, maximum in profile: 5 percent
Salinity, maximum in profile: Nonsaline to slightly saline (0.0 to 4.0 mmhos/cm)
Sodium adsorption ratio, maximum in profile: 10.0
Available water storage in profile: High (about 9.6 inches)

Interpretive groups

Land capability classification (irrigated): None specified
Land capability classification (nonirrigated): 4e
Hydrologic Soil Group: C
Ecological site: Clayey (Cy) 10-14" p.z. (R052XN162MT)
Hydric soil rating: No

Description of Yawdim

Setting

Landform: Hills
Down-slope shape: Linear
Across-slope shape: Linear

Typical profile

A - 0 to 5 inches: silty clay loam
C - 5 to 16 inches: silty clay loam
Cr - 16 to 60 inches: weathered bedrock

Properties and qualities

Slope: 8 to 15 percent
Depth to restrictive feature: 10 to 20 inches to paralithic bedrock
Natural drainage class: Well drained
Capacity of the most limiting layer to transmit water (Ksat): Moderately low to moderately high (0.06 to 0.20 in/hr)
Depth to water table: More than 80 inches

Frequency of flooding: None
Frequency of ponding: None
Calcium carbonate, maximum in profile: 10 percent
Available water storage in profile: Very low (about 2.0 inches)

Interpretive groups

Land capability classification (irrigated): None specified
Land capability classification (nonirrigated): 6e
Hydrologic Soil Group: D
Ecological site: Shallow Clay (SwC) 10-14" p.z. (R052XN179MT)
Hydric soil rating: No

Minor Components

Tanna

Percent of map unit: 7 percent
Landform: Hills
Down-slope shape: Linear
Across-slope shape: Linear
Ecological site: Silty (Si) 10-14" p.z. (R052XN161MT)
Hydric soil rating: No

Abor

Percent of map unit: 6 percent
Landform: Hills
Down-slope shape: Linear
Across-slope shape: Linear
Ecological site: Clayey (Cy) 10-14" p.z. (R052XN162MT)
Hydric soil rating: No

Cabbart

Percent of map unit: 2 percent
Landform: Hills
Down-slope shape: Linear
Across-slope shape: Linear
Ecological site: Shallow (Sw) 10-14" p.z. (R052XN178MT)
Hydric soil rating: No

Soil Information for All Uses

Soil Reports

The Soil Reports section includes various formatted tabular and narrative reports (tables) containing data for each selected soil map unit and each component of each unit. No aggregation of data has occurred as is done in reports in the Soil Properties and Qualities and Suitabilities and Limitations sections.

The reports contain soil interpretive information as well as basic soil properties and qualities. A description of each report (table) is included.

Land Classifications

This folder contains a collection of tabular reports that present a variety of soil groupings. The reports (tables) include all selected map units and components for each map unit. Land classifications are specified land use and management groupings that are assigned to soil areas because combinations of soil have similar behavior for specified practices. Most are based on soil properties and other factors that directly influence the specific use of the soil. Example classifications include ecological site classification, farmland classification, irrigated and nonirrigated land capability classification, and hydric rating.

Prime and other Important Farmlands

This table lists the map units in the survey area that are considered important farmlands. Important farmlands consist of prime farmland, unique farmland, and farmland of statewide or local importance. This list does not constitute a recommendation for a particular land use.

In an effort to identify the extent and location of important farmlands, the Natural Resources Conservation Service, in cooperation with other interested Federal, State, and local government organizations, has inventoried land that can be used for the production of the Nation's food supply.

Prime farmland is of major importance in meeting the Nation's short- and long-range needs for food and fiber. Because the supply of high-quality farmland is limited, the U.S. Department of Agriculture recognizes that responsible levels of government, as well as individuals, should encourage and facilitate the wise use of our Nation's prime farmland.

Prime farmland, as defined by the U.S. Department of Agriculture, is land that has the best combination of physical and chemical characteristics for producing food, feed, forage, fiber, and oilseed crops and is available for these uses. It could be cultivated land, pastureland, forestland, or other land, but it is not urban or built-up land or water areas. The soil quality, growing season, and moisture supply are those needed for the soil to economically produce sustained high yields of crops when proper management, including water management, and acceptable farming methods are applied. In general, prime farmland has an adequate and dependable supply of moisture from precipitation or irrigation, a favorable temperature and growing season, acceptable acidity or alkalinity, an acceptable salt and sodium content, and few or no rocks. The water supply is dependable and of adequate quality. Prime farmland is permeable to water and air. It is not excessively erodible or saturated with water for long periods, and it either is not frequently flooded during the growing season or is protected from flooding. Slope ranges mainly from 0 to 6 percent. More detailed information about the criteria for prime farmland is available at the local office of the Natural Resources Conservation Service.

For some of the soils identified in the table as prime farmland, measures that overcome a hazard or limitation, such as flooding, wetness, and droughtiness, are needed. Onsite evaluation is needed to determine whether or not the hazard or limitation has been overcome by corrective measures.

A recent trend in land use in some areas has been the loss of some prime farmland to industrial and urban uses. The loss of prime farmland to other uses puts pressure on marginal lands, which generally are more erodible, droughty, and less productive and cannot be easily cultivated.

Unique farmland is land other than prime farmland that is used for the production of specific high-value food and fiber crops, such as citrus, tree nuts, olives, cranberries, and other fruits and vegetables. It has the special combination of soil quality, growing season, moisture supply, temperature, humidity, air drainage, elevation, and aspect needed for the soil to economically produce sustainable high yields of these crops when properly managed. The water supply is dependable and of adequate quality. Nearness to markets is an additional consideration. Unique farmland is not based on national criteria. It commonly is in areas where there is a special microclimate, such as the wine country in California.

In some areas, land that does not meet the criteria for prime or unique farmland is considered to be *farmland of statewide importance* for the production of food, feed, fiber, forage, and oilseed crops. The criteria for defining and delineating farmland of statewide importance are determined by the appropriate State agencies. Generally, this land includes areas of soils that nearly meet the requirements for prime farmland and that economically produce high yields of crops when treated and managed according to acceptable farming methods. Some areas may produce as high a yield as prime farmland if conditions are favorable. Farmland of statewide importance may include tracts of land that have been designated for agriculture by State law.

In some areas that are not identified as having national or statewide importance, land is considered to be *farmland of local importance* for the production of food, feed, fiber, forage, and oilseed crops. This farmland is identified by the appropriate local agencies. Farmland of local importance may include tracts of land that have been designated for agriculture by local ordinance.

Report—Prime and other Important Farmlands

Prime and other Important Farmlands–Choteau-Conrad Area; Parts of Teton and Pondera Counties, Montana		
Map Symbol	**Map Unit Name**	**Farmland Classification**
39B	Ethridge silty clay loam, 0 to 4 percent slopes	Prime farmland if irrigated
40B	Kobase silty clay loam, 0 to 4 percent slopes	Farmland of statewide importance
40C	Kobase silty clay loam, 4 to 8 percent slopes	Farmland of statewide importance
41B	Richey silty clay loam, 0 to 4 percent slopes	Farmland of statewide importance
70B	Megonot silty clay loam, 0 to 4 percent slopes	Not prime farmland
114A	Gerdrum-Absher clay loams, 0 to 2 percent slopes	Not prime farmland
148C	Megonot-Richey-Tanna clay loams, 2 to 8 percent slopes	Farmland of statewide importance
150B	Marias-Linnet silty clays, 0 to 4 percent slopes	Not prime farmland
164B	Scobey-Kevin clay loams, 0 to 4 percent slopes	Prime farmland if irrigated
170C	Abor-Yawdim silty clay loams, 4 to 15 percent slopes	Not prime farmland
400	Havre-Fairway loams, 0 to 4 percent slopes, rarely flooded	Farmland of statewide importance
403	Haploborolls-Argiborolls complex, 0 to 4 percent slopes, rarely flooded	Not prime farmland
540B	Marvan silty clay, wet, 0 to 4 percent slopes	Not prime farmland
570D	Megonot-Kobase-Yawdim complex, 8 to 15 percent slopes	Not prime farmland

Soil Physical Properties

This folder contains a collection of tabular reports that present soil physical properties. The reports (tables) include all selected map units and components for each map unit. Soil physical properties are measured or inferred from direct observations in the field or laboratory. Examples of soil physical properties include percent clay, organic matter, saturated hydraulic conductivity, available water capacity, and bulk density.

Engineering Properties

This table gives the engineering classifications and the range of engineering properties for the layers of each soil in the survey area.

Hydrologic soil group is a group of soils having similar runoff potential under similar storm and cover conditions. The criteria for determining Hydrologic soil group is found in the National Engineering Handbook, Chapter 7 issued May 2007(http://directives.sc.egov.usda.gov/OpenNonWebContent.aspx?content=17757.wba). Listing HSGs by soil map unit component and not by soil series is a new concept for the engineers. Past engineering references contained lists of HSGs by soil series. Soil series are continually being defined and redefined, and the list of soil series names changes so frequently as to make the task of maintaining a single national list virtually impossible. Therefore, the criteria is now used to calculate the HSG using the component soil properties and no such national series lists will be maintained. All such references are obsolete and their use should be discontinued. Soil properties that influence runoff potential are those that influence the minimum rate of infiltration for a bare soil after prolonged wetting and when not frozen. These properties are depth to a seasonal high water table, saturated hydraulic conductivity

after prolonged wetting, and depth to a layer with a very slow water transmission rate. Changes in soil properties caused by land management or climate changes also cause the hydrologic soil group to change. The influence of ground cover is treated independently. There are four hydrologic soil groups, A, B, C, and D, and three dual groups, A/D, B/D, and C/D. In the dual groups, the first letter is for drained areas and the second letter is for undrained areas.

The four hydrologic soil groups are described in the following paragraphs:

Group A. Soils having a high infiltration rate (low runoff potential) when thoroughly wet. These consist mainly of deep, well drained to excessively drained sands or gravelly sands. These soils have a high rate of water transmission.

Group B. Soils having a moderate infiltration rate when thoroughly wet. These consist chiefly of moderately deep or deep, moderately well drained or well drained soils that have moderately fine texture to moderately coarse texture. These soils have a moderate rate of water transmission.

Group C. Soils having a slow infiltration rate when thoroughly wet. These consist chiefly of soils having a layer that impedes the downward movement of water or soils of moderately fine texture or fine texture. These soils have a slow rate of water transmission.

Group D. Soils having a very slow infiltration rate (high runoff potential) when thoroughly wet. These consist chiefly of clays that have a high shrink-swell potential, soils that have a high water table, soils that have a claypan or clay layer at or near the surface, and soils that are shallow over nearly impervious material. These soils have a very slow rate of water transmission.

Depth to the upper and lower boundaries of each layer is indicated.

Texture is given in the standard terms used by the U.S. Department of Agriculture. These terms are defined according to percentages of sand, silt, and clay in the fraction of the soil that is less than 2 millimeters in diameter. "Loam," for example, is soil that is 7 to 27 percent clay, 28 to 50 percent silt, and less than 52 percent sand. If the content of particles coarser than sand is 15 percent or more, an appropriate modifier is added, for example, "gravelly."

Classification of the soils is determined according to the Unified soil classification system (ASTM, 2005) and the system adopted by the American Association of State Highway and Transportation Officials (AASHTO, 2004).

The Unified system classifies soils according to properties that affect their use as construction material. Soils are classified according to particle-size distribution of the fraction less than 3 inches in diameter and according to plasticity index, liquid limit, and organic matter content. Sandy and gravelly soils are identified as GW, GP, GM, GC, SW, SP, SM, and SC; silty and clayey soils as ML, CL, OL, MH, CH, and OH; and highly organic soils as PT. Soils exhibiting engineering properties of two groups can have a dual classification, for example, CL-ML.

The AASHTO system classifies soils according to those properties that affect roadway construction and maintenance. In this system, the fraction of a mineral soil that is less than 3 inches in diameter is classified in one of seven groups from A-1 through A-7 on the basis of particle-size distribution, liquid limit, and plasticity index. Soils in group A-1 are coarse grained and low in content of fines (silt and clay). At the other extreme, soils in group A-7 are fine grained. Highly organic soils are classified in group A-8 on the basis of visual inspection.

If laboratory data are available, the A-1, A-2, and A-7 groups are further classified as A-1-a, A-1-b, A-2-4, A-2-5, A-2-6, A-2-7, A-7-5, or A-7-6. As an additional

refinement, the suitability of a soil as subgrade material can be indicated by a group index number. Group index numbers range from 0 for the best subgrade material to 20 or higher for the poorest.

Percentage of rock fragments larger than 10 inches in diameter and 3 to 10 inches in diameter are indicated as a percentage of the total soil on a dry-weight basis. The percentages are estimates determined mainly by converting volume percentage in the field to weight percentage. Three values are provided to identify the expected Low (L), Representative Value (R), and High (H).

Percentage (of soil particles) passing designated sieves is the percentage of the soil fraction less than 3 inches in diameter based on an ovendry weight. The sieves, numbers 4, 10, 40, and 200 (USA Standard Series), have openings of 4.76, 2.00, 0.420, and 0.074 millimeters, respectively. Estimates are based on laboratory tests of soils sampled in the survey area and in nearby areas and on estimates made in the field. Three values are provided to identify the expected Low (L), Representative Value (R), and High (H).

Liquid limit and *plasticity index* (Atterberg limits) indicate the plasticity characteristics of a soil. The estimates are based on test data from the survey area or from nearby areas and on field examination. Three values are provided to identify the expected Low (L), Representative Value (R), and High (H).

References:

American Association of State Highway and Transportation Officials (AASHTO). 2004. Standard specifications for transportation materials and methods of sampling and testing. 24th edition.

American Society for Testing and Materials (ASTM). 2005. Standard classification of soils for engineering purposes. ASTM Standard D2487-00.

Absence of an entry indicates that the data were not estimated. The asterisk '*' denotes the representative texture; other possible textures follow the dash. The criteria for determining the hydrologic soil group for individual soil components is found in the National Engineering Handbook, Chapter 7 issued May 2007(http://directives.sc.egov.usda.gov/OpenNonWebContent.aspx?content=17757.wba). Three values are provided to identify the expected Low (L), Representative Value (R), and High (H).

Engineering Properties–Choteau-Conrad Area; Parts of Teton and Pondera Counties, Montana														
Map unit symbol and soil name	Pct. of map unit	Hydrologic group	Depth	USDA texture	Classification		Pct Fragments		Percentage passing sieve number—				Liquid limit	Plasticity index
					Unified	AASHTO	>10 inches	3-10 inches	4	10	40	200		
			In				*L-R-H*	*L-R-H*	*L-R-H*	*L-R-H*	*L-R-H*	*L-R-H*	*L-R-H*	*L-R-H*
39B—Ethridge silty clay loam, 0 to 4 percent slopes														
Ethridge	85	C	0-6	Silty clay loam	CL	A-6, A-7	0- 0- 0	0- 0- 0	100-100-100	95-98-100	90-95-100	85-90-95	25-35-45	10-15-20
			6-19	Silty clay, silty clay loam, clay	CL	A-7	0- 0- 0	0- 0- 0	100-100-100	95-98-100	95-98-100	90-93-95	40-45-50	20-25-30
			19-48	Silty clay loam	—	—	0- 0- 0	0- 0- 0	100-100-100	95-98-100	90-95-100	85-90-95	30-40-50	10-18-25
			48-60	Silty clay loam, clay loam, silt loam	CL	A-6, A-7	0- 0- 0	0- 0- 0	100-100-100	95-98-100	90-95-100	85-90-95	30-40-50	10-18-25
40B—Kobase silty clay loam, 0 to 4 percent slopes														
Kobase	90	C	0-6	Silty clay loam	CL	A-6, A-7	0- 0- 0	0- 0- 0	95-98-100	90-95-100	85-93-100	80-88-95	30-38-45	10-15-20
			6-24	Silty clay loam, silty clay, clay	CL	A-6, A-7	0- 0- 0	0- 0- 0	95-98-100	90-95-100	85-93-100	75-85-95	35-40-45	15-20-25
			24-28	Silty clay loam, silty clay, clay	CL	A-6, A-7	0- 0- 0	0- 0- 0	95-98-100	90-95-100	85-93-100	75-85-95	35-40-45	15-20-25
			28-36	Silty clay loam, silty clay, clay	CL	A-6, A-7	0- 0- 0	0- 0- 0	95-98-100	90-95-100	85-93-100	75-85-95	35-40-45	15-20-25
			36-60	Clay, silty clay, silty clay loam	CL	A-7, A-6	0- 0- 0	0- 0- 0	95-98-100	90-95-100	85-93-100	75-85-95	35-40-45	15-20-25

Engineering Properties–Choteau-Conrad Area; Parts of Teton and Pondera Counties, Montana														
Map unit symbol and soil name	Pct. of map unit	Hydrologic group	Depth	USDA texture	Classification		Pct Fragments		Percentage passing sieve number—				Liquid limit	Plasticity index
					Unified	AASHTO	>10 inches	3-10 inches	4	10	40	200		
			In				*L-R-H*	*L-R-H*	*L-R-H*	*L-R-H*	*L-R-H*	*L-R-H*	*L-R-H*	*L-R-H*
40C—Kobase silty clay loam, 4 to 8 percent slopes														
Kobase	90	C	0-6	Silty clay loam	CL	A-6, A-7	0- 0- 0	0- 0- 0	95-98-100	90-95-100	85-93-100	80-88-95	30-38-45	10-15-20
			6-24	Silty clay loam, silty clay, clay	CL	A-6, A-7	0- 0- 0	0- 0- 0	95-98-100	90-95-100	85-93-100	75-85-95	35-40-45	15-20-25
			24-28	Silty clay loam, silty clay, clay	CL	A-6, A-7	0- 0- 0	0- 0- 0	95-98-100	90-95-100	85-93-100	75-85-95	35-40-45	15-20-25
			28-36	Silty clay loam, silty clay, clay	CL	A-6, A-7	0- 0- 0	0- 0- 0	95-98-100	90-95-100	85-93-100	75-85-95	35-40-45	15-20-25
			36-60	Clay, silty clay, silty clay loam	CL	A-7, A-6	0- 0- 0	0- 0- 0	95-98-100	90-95-100	85-93-100	75-85-95	35-40-45	15-20-25
41B—Richey silty clay loam, 0 to 4 percent slopes														
Richey	85	C	0-7	Silty clay loam	CL	A-6, A-7	0- 0- 0	0- 0- 0	100-100-100	95-98-100	90-95-100	85-93-100	30-38-45	10-15-20
			7-16	Silty clay loam, silty clay	CL	A-6, A-7	0- 0- 0	0- 0- 0	100-100-100	95-98-100	90-95-100	85-93-100	35-43-50	15-23-30
			16-36	Silty clay, silty clay loam, clay loam	CL	A-6, A-7	0- 0- 0	0- 0- 0	100-100-100	95-98-100	85-93-100	80-90-100	35-43-50	15-23-30
			36-60	Silty clay, silty clay loam, clay loam	CL	A-6, A-7	0- 0- 0	0- 0- 0	100-100-100	95-98-100	85-93-100	80-90-100	35-43-50	15-23-30

Engineering Properties–Choteau-Conrad Area; Parts of Teton and Pondera Counties, Montana														
Map unit symbol and soil name	Pct. of map unit	Hydrologic group	Depth	USDA texture	Classification		Pct Fragments		Percentage passing sieve number—				Liquid limit	Plasticity index
					Unified	AASHTO	>10 inches	3-10 inches	4	10	40	200		
			In				*L-R-H*	*L-R-H*	*L-R-H*	*L-R-H*	*L-R-H*	*L-R-H*	*L-R-H*	*L-R-H*
70B—Megonot silty clay loam, 0 to 4 percent slopes														
Megonot	90	D	0-5	Silty clay loam	CL	A-6	0- 0- 0	0- 0- 0	95-98-100	85-93-100	85-93-100	75-88-100	35-38-40	15-18-20
			5-12	Silty clay loam, clay loam, silty clay	CL	A-6, A-7	0- 0- 0	0- 0- 0	85-93-100	75-88-100	75-83-90	65-78-90	35-40-45	15-20-25
			12-21	Silty clay loam, clay loam, silty clay	CL, GC	A-6, A-7	0- 0- 0	0- 0- 0	65-83-100	55-78-100	45-68-90	40-65-90	35-40-45	15-20-25
			21-32	Silty clay loam, clay loam, channery silty clay	CL, GC	A-6, A-7	0- 0- 0	0- 0- 0	65-83-100	55-78-100	45-68-90	40-65-90	35-40-45	15-20-25
			32-60	Weathered bedrock	—	—	—	—	—	—	—	—	—	—

Engineering Properties–Choteau-Conrad Area; Parts of Teton and Pondera Counties, Montana														
Map unit symbol and soil name	Pct. of map unit	Hydrologic group	Depth	USDA texture	Classification		Pct Fragments		Percentage passing sieve number—				Liquid limit	Plasticity index
					Unified	AASHTO	>10 inches	3-10 inches	4	10	40	200		
			In				*L-R-H*	*L-R-H*	*L-R-H*	*L-R-H*	*L-R-H*	*L-R-H*	*L-R-H*	*L-R-H*
114A—Gerdrum-Absher clay loams, 0 to 2 percent slopes														
Gerdrum	50	D	0-3	Clay loam	CL	A-6	0- 0- 0	0- 0- 0	80-90-100	75-88-100	65-80-95	60-75-90	25-33-40	10-15-20
			3-15	Clay, silty clay, silty clay loam	CH, CL	A-7	0- 0- 0	0- 0- 0	90-95-100	90-95-100	85-93-100	75-85-95	40-50-60	20-30-40
			15-25	Clay, silty clay, silty clay loam	CH, CL	A-7	0- 0- 0	0- 0- 0	90-95-100	90-95-100	85-93-100	75-85-95	40-50-60	20-30-40
			25-36	Clay loam, clay, silty clay loam	CH, CL, SC	A-6, A-7	0- 0- 0	0- 0- 0	90-95-100	90-95-100	80-88-95	45-60-75	35-45-55	15-25-35
			36-60	Silty clay, clay loam, clay	CH, CL, SC	A-6, A-7	0- 0- 0	0- 0- 0	90-95-100	90-95-100	80-88-95	45-60-75	35-45-55	15-25-35
Absher	35	D	0-2	Clay loam	CL	A-6	0- 0- 0	0- 0- 0	95-98-100	75-88-100	70-85-100	60-75-90	25-33-40	10-15-20
			2-9	Silty clay, clay, clay loam	CH, CL	A-7	0- 0- 0	0- 0- 0	95-98-100	75-88-100	70-85-100	60-78-95	40-50-60	20-30-40
			9-60	Silty clay, clay, clay loam	CH, CL	A-7	0- 0- 0	0- 0- 0	95-98-100	75-88-100	70-85-100	60-78-95	40-50-60	20-30-40

Engineering Properties–Choteau-Conrad Area; Parts of Teton and Pondera Counties, Montana														
Map unit symbol and soil name	Pct. of map unit	Hydrologic group	Depth	USDA texture	Classification		Pct Fragments		Percentage passing sieve number—				Liquid limit	Plasticity index
					Unified	AASHTO	>10 inches	3-10 inches	4	10	40	200		
			In				*L-R-H*	*L-R-H*	*L-R-H*	*L-R-H*	*L-R-H*	*L-R-H*	*L-R-H*	*L-R-H*
148C—Megonot-Richey-Tanna clay loams, 2 to 8 percent slopes														
Megonot	35	D	0-6	Clay loam	CL	A-6	0- 0- 0	0- 0- 0	85-93-100	75-88-100	75-88-100	70-80-90	35-38-40	15-18-20
			6-12	Silty clay loam, clay loam, silty clay	CL	A-6, A-7	0- 0- 0	0- 0- 0	85-93-100	75-88-100	75-83-90	65-78-90	35-40-45	15-20-25
			12-21	Silty clay loam, clay loam, silty clay	CL, GC	A-6, A-7	0- 0- 0	0- 0- 0	65-83-100	55-78-100	45-68-90	40-65-90	35-40-45	15-20-25
			21-32	Silty clay loam, clay loam, channery silty clay	CL, GC	A-6, A-7	0- 0- 0	0- 0- 0	65-83-100	55-78-100	45-68-90	40-65-90	35-40-45	15-20-25
			32-60	Weathered bedrock	—	—	—	—	—	—	—	—	—	—
Richey	30	C	0-6	Clay loam	CL	A-6, A-7	0- 0- 0	0- 0- 0	100-100-100	90-95-100	85-93-100	80-85-90	30-38-45	10-15-20
			6-16	Silty clay loam, silty clay	CL	A-6, A-7	0- 0- 0	0- 0- 0	100-100-100	95-98-100	90-95-100	85-93-100	35-43-50	15-23-30
			16-36	Silty clay, silty clay loam, clay loam	CL	A-6, A-7	0- 0- 0	0- 0- 0	100-100-100	95-98-100	85-93-100	80-90-100	35-43-50	15-23-30
			36-60	Silty clay, silty clay loam, clay loam	CL	A-6, A-7	0- 0- 0	0- 0- 0	100-100-100	95-98-100	85-93-100	80-90-100	35-43-50	15-23-30
Tanna	20	D	0-6	Clay loam	CL	A-6	0- 0- 0	0- 3- 5	90-95-100	90-95-100	85-90-95	70-75-80	25-33-40	10-15-20
			6-11	Clay loam, clay, silty clay loam	CL	A-6, A-7	0- 0- 0	0- 3- 5	90-95-100	90-95-100	80-88-95	75-83-90	35-40-45	15-20-25
			11-25	Silty clay loam, channery clay loam	CL-ML, GC-GM, SC-SM	A-2, A-4	0- 0- 0	0- 5- 10	40-70-100	30-63-95	25-53-80	20-45-70	25-28-30	5-8 -10

Engineering Properties–Choteau-Conrad Area; Parts of Teton and Pondera Counties, Montana														
Map unit symbol and soil name	Pct. of map unit	Hydrologic group	Depth	USDA texture	Classification		Pct Fragments		Percentage passing sieve number—				Liquid limit	Plasticity index
					Unified	AASHTO	>10 inches	3-10 inches	4	10	40	200		
			In				*L-R-H*	*L-R-H*	*L-R-H*	*L-R-H*	*L-R-H*	*L-R-H*	*L-R-H*	*L-R-H*
			25-35	Silty clay loam, channery clay loam, loam	CL-ML, GC-GM, SC-SM	A-2, A-4	0- 0- 0	0- 5- 10	40-70-100	30-63-95	25-53-80	20-45-70	25-28-30	5-8 -10
			35-60	Unweathered bedrock	—	—	—	—	—	—	—	—	—	—
150B—Marias-Linnet silty clays, 0 to 4 percent slopes														
Marias	55	D	0-5	Silty clay	CH, CL	A-7	0- 0- 0	0- 0- 0	100-100-100	100-100-100	95-98-100	90-93-95	40-50-60	20-30-40
			5-11	Clay, silty clay	CH, CL	A-7	0- 0- 0	0- 0- 0	100-100-100	100-100-100	90-95-100	75-85-95	40-55-70	25-38-50
			11-29	Clay, silty clay	CH, CL	A-7	0- 0- 0	0- 0- 0	100-100-100	100-100-100	90-95-100	75-85-95	40-55-70	25-38-50
			29-60	Clay, silty clay	CH, CL	A-7	0- 0- 0	0- 0- 0	100-100-100	100-100-100	90-95-100	75-85-95	40-55-70	25-38-50
Linnet	35	C	0-5	Silty clay	CL	A-7	0- 0- 0	0- 0- 0	90-95-100	85-93-100	80-90-100	75-85-95	40-45-50	15-20-25
			5-13	Silty clay, clay	CH, CL	A-7	0- 0- 0	0- 0- 0	90-95-100	85-93-100	75-88-100	60-75-90	45-55-65	25-35-45
			13-48	Silty clay, clay, silty clay loam	CH, CL	A-6, A-7	0- 0- 0	0- 3- 5	85-93-100	80-90-100	70-85-100	55-73-90	35-45-55	15-25-35
			48-60	Silty clay, clay, silty clay loam	CH, CL	A-6, A-7	0- 0- 0	0- 3- 5	85-93-100	80-90-100	70-85-100	55-73-90	35-45-55	15-25-35

Engineering Properties–Choteau-Conrad Area; Parts of Teton and Pondera Counties, Montana														
Map unit symbol and soil name	Pct. of map unit	Hydrologic group	Depth	USDA texture	Classification		Pct Fragments		Percentage passing sieve number—				Liquid limit	Plasticity index
					Unified	AASHTO	>10 inches	3-10 inches	4	10	40	200		
			In				*L-R-H*	*L-R-H*	*L-R-H*	*L-R-H*	*L-R-H*	*L-R-H*	*L-R-H*	*L-R-H*
164B—Scobey-Kevin clay loams, 0 to 4 percent slopes														
Scobey	50	C	0-6	Clay loam	CL	A-6	0- 0- 0	0- 3- 7	82-89-100	81-88-100	74-84-99	54-64-79	40-40-50	20-20-25
			6-15	Clay, clay loam	CH	A-7-6	0- 0- 0	0- 3- 6	82-89-100	81-89-100	74-85-99	56-68-82	50-50-60	25-30-35
			15-29	Clay loam	CH	A-7-6	0- 0- 0	0- 3- 6	83-90-100	82-89-100	75-85-100	55-66-81	40-50-50	20-25-30
			29-43	Clay loam	CH	A-7-6	0- 0- 0	0- 3- 6	83-90-100	82-89-100	75-86-100	55-66-81	40-50-50	20-25-30
			43-61	Clay loam	CH	A-7-6	0- 0- 0	0- 3- 6	84-90-100	83-90-100	76-86-100	55-66-80	40-50-50	20-25-30
			61-79	Clay loam	CH	A-7-6	0- 0- 0	0- 3- 6	84-90-100	83-90-100	76-86-100	55-66-80	40-50-50	20-25-30
Kevin	35	C	0-6	Clay loam	CL	A-6	0- 0- 0	0- 3- 7	82-85-100	81-85-100	74-81-100	54-61-79	40-40-50	20-20-25
			6-9	Clay loam, clay	CH	A-7-6	0- 0- 0	0- 3- 6	82-89-100	81-89-100	75-85-100	56-67-82	50-50-60	25-30-30
			9-23	Clay loam	CL	A-6	0- 0- 0	0- 3- 6	83-90-100	82-89-100	75-85-99	54-64-78	40-40-50	15-20-25
			23-41	Clay loam	CL	A-6	0- 0- 0	0- 3- 6	83-90-100	82-89-100	75-85-99	54-64-78	40-40-50	15-20-25
			41-58	Clay loam	CL	A-6	0- 0- 0	0- 3- 6	84-90-100	83-90-100	76-86-99	54-64-78	40-40-50	20-20-25
			58-79	Clay loam	CL	A-6	0- 0- 0	0- 3- 6	84-90-100	83-90-100	76-86-99	54-64-78	40-40-50	20-25-25

Engineering Properties–Choteau-Conrad Area; Parts of Teton and Pondera Counties, Montana														
Map unit symbol and soil name	Pct. of map unit	Hydrologic group	Depth	USDA texture	Classification		Pct Fragments		Percentage passing sieve number—				Liquid limit	Plasticity index
					Unified	AASHTO	>10 inches	3-10 inches	4	10	40	200		
			In				*L-R-H*	*L-R-H*	*L-R-H*	*L-R-H*	*L-R-H*	*L-R-H*	*L-R-H*	*L-R-H*
170C—Abor-Yawdim silty clay loams, 4 to 15 percent slopes														
Abor	50	D	0-5	Silty clay loam	CL	A-6, A-7	0- 0- 0	0- 0- 0	80-90-100	75-88-100	65-83-100	60-75-90	35-40-45	15-20-25
			5-14	Silty clay, clay, silty clay loam	CH, CL	A-6, A-7	0- 0- 0	0- 0- 0	80-90-100	75-88-100	65-83-100	60-78-95	35-50-65	20-33-45
			14-30	Silty clay, clay, silty clay loam	CH, CL	A-6, A-7	0- 0- 0	0- 0- 0	80-90-100	75-88-100	65-83-100	60-78-95	35-50-65	20-33-45
			30-60	Unweathered bedrock	—	—	—	—	—	—	—	—	—	—
Yawdim	35	D	0-5	Silty clay loam	CL	A-6, A-7	0- 0- 0	0- 0- 0	100-100-100	100-100-100	90-95-100	80-85-90	30-38-45	10-15-20
			5-16	Silty clay loam, clay loam, clay	CH, CL	A-7	0- 0- 0	0- 0- 0	100-100-100	100-100-100	90-95-100	70-83-95	40-50-60	15-25-35
			16-60	Weathered bedrock	—	—	—	—	—	—	—	—	—	—

Engineering Properties–Choteau-Conrad Area; Parts of Teton and Pondera Counties, Montana														
Map unit symbol and soil name	Pct. of map unit	Hydrologic group	Depth	USDA texture	Classification		Pct Fragments		Percentage passing sieve number—				Liquid limit	Plasticity index
					Unified	AASHTO	>10 inches	3-10 inches	4	10	40	200		
			In				*L-R-H*	*L-R-H*	*L-R-H*	*L-R-H*	*L-R-H*	*L-R-H*	*L-R-H*	*L-R-H*
400—Havre-Fairway loams, 0 to 4 percent slopes, rarely flooded														
Havre	45	B	0-8	Loam	CL-ML	A-4	0- 0- 0	0- 0- 0	100-100 -100	100-100 -100	80-88-95	60-75-90	20-25 -30	5-8 -10
			8-20	Stratified fine sandy loam to clay loam	—	—	0- 0- 0	0- 0- 0	100-100 -100	100-100 -100	80-88-95	60-70-80	20-28 -35	5-10-15
			20-60	Stratified fine sandy loam to clay loam	CL, CL-ML	A-4, A-6	0- 0- 0	0- 0- 0	100-100 -100	100-100 -100	80-88-95	60-70-80	20-28 -35	5-10-15
Fairway	40	B	0-9	Loam	CL-ML	A-4	0- 0- 0	0- 0- 0	100-100 -100	100-100 -100	90-95-100	70-80-90	20-25 -30	5-8 -10
			9-15	Silt loam, loam	CL, CL-ML	A-4, A-6	0- 0- 0	0- 0- 0	100-100 -100	100-100 -100	90-95-100	70-80-90	20-28 -35	5-10-15
			15-48	Silty clay loam, loam	CL, CL-ML	A-4, A-6	0- 0- 0	0- 0- 0	100-100 -100	100-100 -100	95-98-100	85-90-95	20-30 -40	5-10-15
			48-60	Sand, gravelly loamy sand, very gravelly sand	GP-GM, SM, SP, SP-SM	A-1, A-2	0- 0- 0	0- 5- 10	40-70-100	30-65-100	20-40-60	0- 8- 15	0-17 -23	NP

Engineering Properties–Choteau-Conrad Area; Parts of Teton and Pondera Counties, Montana														
Map unit symbol and soil name	Pct. of map unit	Hydrologic group	Depth	USDA texture	Classification		Pct Fragments		Percentage passing sieve number—				Liquid limit	Plasticity index
					Unified	AASHTO	>10 inches	3-10 inches	4	10	40	200		
			In				*L-R-H*	*L-R-H*	*L-R-H*	*L-R-H*	*L-R-H*	*L-R-H*	*L-R-H*	*L-R-H*
403—Haploborolls-Argiborolls complex, 0 to 4 percent slopes, rarely flooded														
Haploborolls	45	C	0-6	Loam	CL-ML	A-4	0- 0- 0	0- 0- 0	94-96-100	83-90-100	70-81-94	52-60-71	29-36-43	12-15-18
			6-12	Clay loam	CL	A-6	0- 0- 0	0- 0- 0	89-94-100	73-84-100	63-77-95	48-60-75	39-44-49	19-22-25
			12-28	Clay loam, gravelly clay loam	CL, GC-GM, SC-SM	A-4, A-6	0- 0- 0	0- 3- 4	72-81-94	40-62-94	35-56-90	27-44-70	38-42-47	19-22-25
			28-60	Clay loam, gravelly clay loam, very gravelly loam	CL, CL-ML, GC, GC-GM	A-2, A-4, A-6	0- 0- 0	0- 7- 10	63-77-96	22-52-96	19-47-95	14-37-76	31-38-46	13-19-25
Argiborolls	40	C	0-6	Clay loam	CL	A-6	0- 0- 0	0- 0- 0	100-100-100	90-95-100	90-95-100	75-83-90	25-30-35	5-10-15
			6-13	Silty clay loam, clay, silty clay	CL	A-7	0- 0- 0	0- 0- 0	100-100-100	95-98-100	95-98-100	90-93-95	40-45-50	20-25-30
			13-60	Clay loam, silt loam, silty clay loam	CL	A-6, A-7	0- 0- 0	0- 0- 0	100-100-100	95-98-100	90-95-100	85-90-95	30-40-50	10-18-25
540B—Marvan silty clay, wet, 0 to 4 percent slopes														
Marvan	85	D	0-4	Silty clay	CH, CL	A-7	0- 0- 0	0- 0- 0	100-100-100	100-100-100	95-98-100	90-93-95	40-48-55	25-30-35
			4-13	Silty clay	CH, CL	A-7	0- 0- 0	0- 0- 0	100-100-100	100-100-100	95-98-100	90-93-95	40-48-55	25-30-35
			13-20	Clay, silty clay	CH	A-7	0- 0- 0	0- 0- 0	100-100-100	100-100-100	95-98-100	75-85-95	50-58-65	25-33-40
			20-60	Clay	CH	A-7	0- 0- 0	0- 0- 0	100-100-100	100-100-100	95-98-100	75-85-95	50-58-65	25-33-40

Engineering Properties–Choteau-Conrad Area; Parts of Teton and Pondera Counties, Montana														
Map unit symbol and soil name	Pct. of map unit	Hydrologic group	Depth	USDA texture	Classification		Pct Fragments		Percentage passing sieve number—				Liquid limit	Plasticity index
					Unified	AASHTO	>10 inches	3-10 inches	4	10	40	200		
			In				*L-R-H*	*L-R-H*	*L-R-H*	*L-R-H*	*L-R-H*	*L-R-H*	*L-R-H*	*L-R-H*
570D—Megonot-Kobase-Yawdim complex, 8 to 15 percent slopes														
Megonot	35	D	0-6	Clay loam	CL	A-6	0- 0- 0	0- 0- 0	85-93-100	75-88-100	75-88-100	70-80-90	35-38-40	15-18-20
			6-12	Silty clay loam, clay loam, silty clay	CL	A-6, A-7	0- 0- 0	0- 0- 0	85-93-100	75-88-100	75-83-90	65-78-90	35-40-45	15-20-25
			12-21	Silty clay loam, clay loam, silty clay	CL, GC	A-6, A-7	0- 0- 0	0- 0- 0	65-83-100	55-78-100	45-68-90	40-65-90	35-40-45	15-20-25
			21-32	Silty clay loam, clay loam, channery silty clay	CL, GC	A-6, A-7	0- 0- 0	0- 0- 0	65-83-100	55-78-100	45-68-90	40-65-90	35-40-45	15-20-25
			32-60	Weathered bedrock	—	—	—	—	—	—	—	—	—	—
Kobase	30	C	0-6	Clay loam	CL	A-6, A-7	0- 0- 0	0- 0- 0	95-98-100	90-95-100	60-80-100	55-68-80	30-38-45	10-15-20
			6-24	Silty clay loam, silty clay, clay	CL	A-6, A-7	0- 0- 0	0- 0- 0	95-98-100	90-95-100	85-93-100	75-85-95	35-43-50	15-20-25
			24-28	Silty clay loam, silty clay, clay	CL	A-6, A-7	0- 0- 0	0- 0- 0	95-98-100	90-95-100	85-93-100	75-85-95	35-43-50	15-20-25
			28-36	Silty clay loam, silty clay, clay	CL	A-6, A-7	0- 0- 0	0- 0- 0	95-98-100	90-95-100	85-93-100	75-85-95	35-43-50	15-20-25
			36-60	Silty clay loam, silty clay, clay	CL	A-6, A-7	0- 0- 0	0- 0- 0	95-98-100	90-95-100	85-93-100	75-85-95	35-43-50	15-20-25
Yawdim	20	D	0-5	Silty clay loam	CL	A-6, A-7	0- 0- 0	0- 0- 0	100-100-100	100-100-100	90-95-100	80-85-90	30-38-45	10-15-20
			5-16	Silty clay loam, clay loam, clay	CH, CL	A-7	0- 0- 0	0- 0- 0	100-100-100	100-100-100	90-95-100	70-83-95	40-50-60	15-25-35
			16-60	Weathered bedrock	—	—	—	—	—	—	—	—	—	—

References

American Association of State Highway and Transportation Officials (AASHTO). 2004. Standard specifications for transportation materials and methods of sampling and testing. 24th edition.

American Society for Testing and Materials (ASTM). 2005. Standard classification of soils for engineering purposes. ASTM Standard D2487-00.

Cowardin, L.M., V. Carter, F.C. Golet, and E.T. LaRoe. 1979. Classification of wetlands and deep-water habitats of the United States. U.S. Fish and Wildlife Service FWS/OBS-79/31.

Federal Register. July 13, 1994. Changes in hydric soils of the United States.

Federal Register. September 18, 2002. Hydric soils of the United States.

Hurt, G.W., and L.M. Vasilas, editors. Version 6.0, 2006. Field indicators of hydric soils in the United States.

National Research Council. 1995. Wetlands: Characteristics and boundaries.

Soil Survey Division Staff. 1993. Soil survey manual. Soil Conservation Service. U.S. Department of Agriculture Handbook 18. http://www.nrcs.usda.gov/wps/portal/nrcs/detail/national/soils/?cid=nrcs142p2_054262

Soil Survey Staff. 1999. Soil taxonomy: A basic system of soil classification for making and interpreting soil surveys. 2nd edition. Natural Resources Conservation Service, U.S. Department of Agriculture Handbook 436. http://www.nrcs.usda.gov/wps/portal/nrcs/detail/national/soils/?cid=nrcs142p2_053577

Soil Survey Staff. 2010. Keys to soil taxonomy. 11th edition. U.S. Department of Agriculture, Natural Resources Conservation Service. http://www.nrcs.usda.gov/wps/portal/nrcs/detail/national/soils/?cid=nrcs142p2_053580

Tiner, R.W., Jr. 1985. Wetlands of Delaware. U.S. Fish and Wildlife Service and Delaware Department of Natural Resources and Environmental Control, Wetlands Section.

United States Army Corps of Engineers, Environmental Laboratory. 1987. Corps of Engineers wetlands delineation manual. Waterways Experiment Station Technical Report Y-87-1.

United States Department of Agriculture, Natural Resources Conservation Service. National forestry manual. http://www.nrcs.usda.gov/wps/portal/nrcs/detail/soils/home/?cid=nrcs142p2_053374

United States Department of Agriculture, Natural Resources Conservation Service. National range and pasture handbook. http://www.nrcs.usda.gov/wps/portal/nrcs/detail/national/landuse/rangepasture/?cid=stelprdb1043084

United States Department of Agriculture, Natural Resources Conservation Service. National soil survey handbook, title 430-VI. http://www.nrcs.usda.gov/wps/portal/nrcs/detail/soils/scientists/?cid=nrcs142p2_054242

United States Department of Agriculture, Natural Resources Conservation Service. 2006. Land resource regions and major land resource areas of the United States, the Caribbean, and the Pacific Basin. U.S. Department of Agriculture Handbook 296. http://www.nrcs.usda.gov/wps/portal/nrcs/detail/national/soils/?cid=nrcs142p2_053624

United States Department of Agriculture, Soil Conservation Service. 1961. Land capability classification. U.S. Department of Agriculture Handbook 210. http://www.nrcs.usda.gov/Internet/FSE_DOCUMENTS/nrcs142p2_052290.pdf

WATER TREATMENT PLANT WEB SOIL SURVEY

United States Department of Agriculture

Natural Resources Conservation Service

A product of the National Cooperative Soil Survey, a joint effort of the United States Department of Agriculture and other Federal agencies, State agencies including the Agricultural Experiment Stations, and local participants

Custom Soil Resource Report for Choteau-Conrad Area; Parts of Teton and Pondera Counties, Montana

February 9, 2018

Preface

Soil surveys contain information that affects land use planning in survey areas. They highlight soil limitations that affect various land uses and provide information about the properties of the soils in the survey areas. Soil surveys are designed for many different users, including farmers, ranchers, foresters, agronomists, urban planners, community officials, engineers, developers, builders, and home buyers. Also, conservationists, teachers, students, and specialists in recreation, waste disposal, and pollution control can use the surveys to help them understand, protect, or enhance the environment.

Various land use regulations of Federal, State, and local governments may impose special restrictions on land use or land treatment. Soil surveys identify soil properties that are used in making various land use or land treatment decisions. The information is intended to help the land users identify and reduce the effects of soil limitations on various land uses. The landowner or user is responsible for identifying and complying with existing laws and regulations.

Although soil survey information can be used for general farm, local, and wider area planning, onsite investigation is needed to supplement this information in some cases. Examples include soil quality assessments (http://www.nrcs.usda.gov/wps/portal/nrcs/main/soils/health/) and certain conservation and engineering applications. For more detailed information, contact your local USDA Service Center (https://offices.sc.egov.usda.gov/locator/app?agency=nrcs) or your NRCS State Soil Scientist (http://www.nrcs.usda.gov/wps/portal/nrcs/detail/soils/contactus/?cid=nrcs142p2_053951).

Great differences in soil properties can occur within short distances. Some soils are seasonally wet or subject to flooding. Some are too unstable to be used as a foundation for buildings or roads. Clayey or wet soils are poorly suited to use as septic tank absorption fields. A high water table makes a soil poorly suited to basements or underground installations.

The National Cooperative Soil Survey is a joint effort of the United States Department of Agriculture and other Federal agencies, State agencies including the Agricultural Experiment Stations, and local agencies. The Natural Resources Conservation Service (NRCS) has leadership for the Federal part of the National Cooperative Soil Survey.

Information about soils is updated periodically. Updated information is available through the NRCS Web Soil Survey, the site for official soil survey information.

The U.S. Department of Agriculture (USDA) prohibits discrimination in all its programs and activities on the basis of race, color, national origin, age, disability, and where applicable, sex, marital status, familial status, parental status, religion, sexual orientation, genetic information, political beliefs, reprisal, or because all or a part of an individual's income is derived from any public assistance program. (Not all prohibited bases apply to all programs.) Persons with disabilities who require

alternative means for communication of program information (Braille, large print, audiotape, etc.) should contact USDA's TARGET Center at (202) 720-2600 (voice and TDD). To file a complaint of discrimination, write to USDA, Director, Office of Civil Rights, 1400 Independence Avenue, S.W., Washington, D.C. 20250-9410 or call (800) 795-3272 (voice) or (202) 720-6382 (TDD). USDA is an equal opportunity provider and employer.

Contents

Preface.....2
How Soil Surveys Are Made.....5
Soil Map.....8
Soil Map.....9
Legend.....10
Map Unit Legend.....12
Map Unit Descriptions.....12
Choteau-Conrad Area; Parts of Teton and Pondera Counties, Montana.....14
40C—Kobase silty clay loam, 4 to 8 percent slopes.....14
114A—Gerdrum-Absher clay loams, 0 to 2 percent slopes.....15
169C—Bascovy-Neldore complex, 2 to 8 percent slopes.....17
540B—Marvan silty clay, wet, 0 to 4 percent slopes.....19
Soil Information for All Uses.....22
Soil Reports.....22
Land Classifications.....22
Prime and other Important Farmlands.....22
Soil Physical Properties.....24
Engineering Properties.....24
References.....36

How Soil Surveys Are Made

Soil surveys are made to provide information about the soils and miscellaneous areas in a specific area. They include a description of the soils and miscellaneous areas and their location on the landscape and tables that show soil properties and limitations affecting various uses. Soil scientists observed the steepness, length, and shape of the slopes; the general pattern of drainage; the kinds of crops and native plants; and the kinds of bedrock. They observed and described many soil profiles. A soil profile is the sequence of natural layers, or horizons, in a soil. The profile extends from the surface down into the unconsolidated material in which the soil formed or from the surface down to bedrock. The unconsolidated material is devoid of roots and other living organisms and has not been changed by other biological activity.

Currently, soils are mapped according to the boundaries of major land resource areas (MLRAs). MLRAs are geographically associated land resource units that share common characteristics related to physiography, geology, climate, water resources, soils, biological resources, and land uses (USDA, 2006). Soil survey areas typically consist of parts of one or more MLRA.

The soils and miscellaneous areas in a survey area occur in an orderly pattern that is related to the geology, landforms, relief, climate, and natural vegetation of the area. Each kind of soil and miscellaneous area is associated with a particular kind of landform or with a segment of the landform. By observing the soils and miscellaneous areas in the survey area and relating their position to specific segments of the landform, a soil scientist develops a concept, or model, of how they were formed. Thus, during mapping, this model enables the soil scientist to predict with a considerable degree of accuracy the kind of soil or miscellaneous area at a specific location on the landscape.

Commonly, individual soils on the landscape merge into one another as their characteristics gradually change. To construct an accurate soil map, however, soil scientists must determine the boundaries between the soils. They can observe only a limited number of soil profiles. Nevertheless, these observations, supplemented by an understanding of the soil-vegetation-landscape relationship, are sufficient to verify predictions of the kinds of soil in an area and to determine the boundaries.

Soil scientists recorded the characteristics of the soil profiles that they studied. They noted soil color, texture, size and shape of soil aggregates, kind and amount of rock fragments, distribution of plant roots, reaction, and other features that enable them to identify soils. After describing the soils in the survey area and determining their properties, the soil scientists assigned the soils to taxonomic classes (units). Taxonomic classes are concepts. Each taxonomic class has a set of soil characteristics with precisely defined limits. The classes are used as a basis for comparison to classify soils systematically. Soil taxonomy, the system of taxonomic classification used in the United States, is based mainly on the kind and character of soil properties and the arrangement of horizons within the profile. After the soil

scientists classified and named the soils in the survey area, they compared the individual soils with similar soils in the same taxonomic class in other areas so that they could confirm data and assemble additional data based on experience and research.

The objective of soil mapping is not to delineate pure map unit components; the objective is to separate the landscape into landforms or landform segments that have similar use and management requirements. Each map unit is defined by a unique combination of soil components and/or miscellaneous areas in predictable proportions. Some components may be highly contrasting to the other components of the map unit. The presence of minor components in a map unit in no way diminishes the usefulness or accuracy of the data. The delineation of such landforms and landform segments on the map provides sufficient information for the development of resource plans. If intensive use of small areas is planned, onsite investigation is needed to define and locate the soils and miscellaneous areas.

Soil scientists make many field observations in the process of producing a soil map. The frequency of observation is dependent upon several factors, including scale of mapping, intensity of mapping, design of map units, complexity of the landscape, and experience of the soil scientist. Observations are made to test and refine the soil-landscape model and predictions and to verify the classification of the soils at specific locations. Once the soil-landscape model is refined, a significantly smaller number of measurements of individual soil properties are made and recorded. These measurements may include field measurements, such as those for color, depth to bedrock, and texture, and laboratory measurements, such as those for content of sand, silt, clay, salt, and other components. Properties of each soil typically vary from one point to another across the landscape.

Observations for map unit components are aggregated to develop ranges of characteristics for the components. The aggregated values are presented. Direct measurements do not exist for every property presented for every map unit component. Values for some properties are estimated from combinations of other properties.

While a soil survey is in progress, samples of some of the soils in the area generally are collected for laboratory analyses and for engineering tests. Soil scientists interpret the data from these analyses and tests as well as the field-observed characteristics and the soil properties to determine the expected behavior of the soils under different uses. Interpretations for all of the soils are field tested through observation of the soils in different uses and under different levels of management. Some interpretations are modified to fit local conditions, and some new interpretations are developed to meet local needs. Data are assembled from other sources, such as research information, production records, and field experience of specialists. For example, data on crop yields under defined levels of management are assembled from farm records and from field or plot experiments on the same kinds of soil.

Predictions about soil behavior are based not only on soil properties but also on such variables as climate and biological activity. Soil conditions are predictable over long periods of time, but they are not predictable from year to year. For example, soil scientists can predict with a fairly high degree of accuracy that a given soil will have a high water table within certain depths in most years, but they cannot predict that a high water table will always be at a specific level in the soil on a specific date.

After soil scientists located and identified the significant natural bodies of soil in the survey area, they drew the boundaries of these bodies on aerial photographs and

identified each as a specific map unit. Aerial photographs show trees, buildings, fields, roads, and rivers, all of which help in locating boundaries accurately.

Soil Map

The soil map section includes the soil map for the defined area of interest, a list of soil map units on the map and extent of each map unit, and cartographic symbols displayed on the map. Also presented are various metadata about data used to produce the map, and a description of each soil map unit.

Custom Soil Resource Report
Soil Map

Map Scale: 1:2,580 if printed on A landscape (11" x 8.5") sheet.

N

Meters: 0 35 70 140 210

Feet: 0 100 200 400 600

Map projection: Web Mercator Corner coordinates: WGS84 Edge tics: UTM Zone 12N WGS84

MAP LEGEND

Area of Interest (AOI)
- Area of Interest (AOI)

Soils
- Soil Map Unit Polygons
- Soil Map Unit Lines
- Soil Map Unit Points

Special Point Features
- Blowout
- Borrow Pit
- Clay Spot
- Closed Depression
- Gravel Pit
- Gravelly Spot
- Landfill
- Lava Flow
- Marsh or swamp
- Mine or Quarry
- Miscellaneous Water
- Perennial Water
- Rock Outcrop
- Saline Spot
- Sandy Spot
- Severely Eroded Spot
- Sinkhole
- Slide or Slip
- Sodic Spot
- Spoil Area
- Stony Spot
- Very Stony Spot
- Wet Spot
- Other
- Special Line Features

Water Features
- Streams and Canals

Transportation
- Rails
- Interstate Highways
- US Routes
- Major Roads
- Local Roads

Background
- Aerial Photography

MAP INFORMATION

The soil surveys that comprise your AOI were mapped at 1:24,000.

Warning: Soil Map may not be valid at this scale.

Enlargement of maps beyond the scale of mapping can cause misunderstanding of the detail of mapping and accuracy of soil line placement. The maps do not show the small areas of contrasting soils that could have been shown at a more detailed scale.

Please rely on the bar scale on each map sheet for map measurements.

Source of Map: Natural Resources Conservation Service
Web Soil Survey URL:
Coordinate System: Web Mercator (EPSG:3857)

Maps from the Web Soil Survey are based on the Web Mercator projection, which preserves direction and shape but distorts distance and area. A projection that preserves area, such as the Albers equal-area conic projection, should be used if more accurate calculations of distance or area are required.

This product is generated from the USDA-NRCS certified data as of the version date(s) listed below.

Soil Survey Area: Choteau-Conrad Area; Parts of Teton and Pondera Counties, Montana
Survey Area Data: Version 15, Oct 3, 2017

Soil map units are labeled (as space allows) for map scales 1:50,000 or larger.

Date(s) aerial images were photographed: May 4, 2013—Feb 15, 2017

The orthophoto or other base map on which the soil lines were compiled and digitized probably differs from the background

MAP LEGEND

MAP INFORMATION

imagery displayed on these maps. As a result, some minor shifting of map unit boundaries may be evident.

Map Unit Legend

Map Unit Symbol	Map Unit Name	Acres in AOI	Percent of AOI
40C	Kobase silty clay loam, 4 to 8 percent slopes	1.9	5.9%
114A	Gerdrum-Absher clay loams, 0 to 2 percent slopes	3.7	11.4%
169C	Bascovy-Neldore complex, 2 to 8 percent slopes	2.7	8.1%
540B	Marvan silty clay, wet, 0 to 4 percent slopes	24.4	74.6%
Totals for Area of Interest		**32.8**	**100.0%**

Map Unit Descriptions

The map units delineated on the detailed soil maps in a soil survey represent the soils or miscellaneous areas in the survey area. The map unit descriptions, along with the maps, can be used to determine the composition and properties of a unit.

A map unit delineation on a soil map represents an area dominated by one or more major kinds of soil or miscellaneous areas. A map unit is identified and named according to the taxonomic classification of the dominant soils. Within a taxonomic class there are precisely defined limits for the properties of the soils. On the landscape, however, the soils are natural phenomena, and they have the characteristic variability of all natural phenomena. Thus, the range of some observed properties may extend beyond the limits defined for a taxonomic class. Areas of soils of a single taxonomic class rarely, if ever, can be mapped without including areas of other taxonomic classes. Consequently, every map unit is made up of the soils or miscellaneous areas for which it is named and some minor components that belong to taxonomic classes other than those of the major soils.

Most minor soils have properties similar to those of the dominant soil or soils in the map unit, and thus they do not affect use and management. These are called noncontrasting, or similar, components. They may or may not be mentioned in a particular map unit description. Other minor components, however, have properties and behavioral characteristics divergent enough to affect use or to require different management. These are called contrasting, or dissimilar, components. They generally are in small areas and could not be mapped separately because of the scale used. Some small areas of strongly contrasting soils or miscellaneous areas are identified by a special symbol on the maps. If included in the database for a given area, the contrasting minor components are identified in the map unit descriptions along with some characteristics of each. A few areas of minor components may not have been observed, and consequently they are not mentioned in the descriptions, especially where the pattern was so complex that it was impractical to make enough observations to identify all the soils and miscellaneous areas on the landscape.

The presence of minor components in a map unit in no way diminishes the usefulness or accuracy of the data. The objective of mapping is not to delineate pure taxonomic classes but rather to separate the landscape into landforms or landform segments that have similar use and management requirements. The delineation of such segments on the map provides sufficient information for the development of resource plans. If intensive use of small areas is planned, however, onsite investigation is needed to define and locate the soils and miscellaneous areas.

An identifying symbol precedes the map unit name in the map unit descriptions. Each description includes general facts about the unit and gives important soil properties and qualities.

Soils that have profiles that are almost alike make up a *soil series*. Except for differences in texture of the surface layer, all the soils of a series have major horizons that are similar in composition, thickness, and arrangement.

Soils of one series can differ in texture of the surface layer, slope, stoniness, salinity, degree of erosion, and other characteristics that affect their use. On the basis of such differences, a soil series is divided into *soil phases*. Most of the areas shown on the detailed soil maps are phases of soil series. The name of a soil phase commonly indicates a feature that affects use or management. For example, Alpha silt loam, 0 to 2 percent slopes, is a phase of the Alpha series.

Some map units are made up of two or more major soils or miscellaneous areas. These map units are complexes, associations, or undifferentiated groups.

A *complex* consists of two or more soils or miscellaneous areas in such an intricate pattern or in such small areas that they cannot be shown separately on the maps. The pattern and proportion of the soils or miscellaneous areas are somewhat similar in all areas. Alpha-Beta complex, 0 to 6 percent slopes, is an example.

An *association* is made up of two or more geographically associated soils or miscellaneous areas that are shown as one unit on the maps. Because of present or anticipated uses of the map units in the survey area, it was not considered practical or necessary to map the soils or miscellaneous areas separately. The pattern and relative proportion of the soils or miscellaneous areas are somewhat similar. Alpha-Beta association, 0 to 2 percent slopes, is an example.

An *undifferentiated group* is made up of two or more soils or miscellaneous areas that could be mapped individually but are mapped as one unit because similar interpretations can be made for use and management. The pattern and proportion of the soils or miscellaneous areas in a mapped area are not uniform. An area can be made up of only one of the major soils or miscellaneous areas, or it can be made up of all of them. Alpha and Beta soils, 0 to 2 percent slopes, is an example.

Some surveys include *miscellaneous areas*. Such areas have little or no soil material and support little or no vegetation. Rock outcrop is an example.

Choteau-Conrad Area; Parts of Teton and Pondera Counties, Montana

40C—Kobase silty clay loam, 4 to 8 percent slopes

Map Unit Setting

National map unit symbol: cpsb
Elevation: 3,200 to 4,000 feet
Mean annual precipitation: 11 to 14 inches
Mean annual air temperature: 39 to 45 degrees F
Frost-free period: 105 to 125 days
Farmland classification: Farmland of statewide importance

Map Unit Composition

Kobase and similar soils: 90 percent
Minor components: 10 percent
Estimates are based on observations, descriptions, and transects of the mapunit.

Description of Kobase

Setting

Landform: Alluvial fans
Down-slope shape: Linear
Across-slope shape: Linear

Typical profile

A - 0 to 6 inches: silty clay loam
Bw - 6 to 24 inches: silty clay
Bk - 24 to 28 inches: clay
Bky - 28 to 36 inches: clay
By - 36 to 60 inches: clay

Properties and qualities

Slope: 4 to 8 percent
Depth to restrictive feature: More than 80 inches
Natural drainage class: Well drained
Capacity of the most limiting layer to transmit water (Ksat): Moderately low to moderately high (0.06 to 0.20 in/hr)
Depth to water table: More than 80 inches
Frequency of flooding: None
Frequency of ponding: None
Calcium carbonate, maximum in profile: 15 percent
Gypsum, maximum in profile: 5 percent
Salinity, maximum in profile: Nonsaline to slightly saline (0.0 to 4.0 mmhos/cm)
Sodium adsorption ratio, maximum in profile: 10.0
Available water storage in profile: High (about 9.7 inches)

Interpretive groups

Land capability classification (irrigated): 4e
Land capability classification (nonirrigated): 4e
Hydrologic Soil Group: C
Ecological site: Clayey (Cy) 10-14" p.z. (R052XN162MT)
Hydric soil rating: No

Minor Components

Ethridge

Percent of map unit: 5 percent
Landform: Alluvial fans
Down-slope shape: Linear
Across-slope shape: Linear
Ecological site: Clayey (Cy) 10-14" p.z. (R052XN162MT)
Hydric soil rating: No

Marias

Percent of map unit: 3 percent
Landform: Alluvial fans
Down-slope shape: Linear
Across-slope shape: Linear
Ecological site: Clayey (Cy) 10-14" p.z. (R052XN162MT)
Hydric soil rating: No

Abor

Percent of map unit: 2 percent
Landform: Plains
Down-slope shape: Linear
Across-slope shape: Linear
Ecological site: Clayey (Cy) 10-14" p.z. (R052XN162MT)
Hydric soil rating: No

114A—Gerdrum-Absher clay loams, 0 to 2 percent slopes

Map Unit Setting

National map unit symbol: cpfj
Elevation: 3,200 to 4,200 feet
Mean annual precipitation: 12 to 14 inches
Mean annual air temperature: 34 to 45 degrees F
Frost-free period: 105 to 125 days
Farmland classification: Not prime farmland

Map Unit Composition

Gerdrum and similar soils: 50 percent
Absher and similar soils: 35 percent
Minor components: 15 percent
Estimates are based on observations, descriptions, and transects of the mapunit.

Description of Gerdrum

Setting

Landform: Stream terraces
Down-slope shape: Linear
Across-slope shape: Linear

Typical profile

E - 0 to 3 inches: clay loam
Btn - 3 to 15 inches: clay
Btkn - 15 to 25 inches: clay
Bknyz - 25 to 36 inches: silty clay loam
Bnyz - 36 to 60 inches: silty clay

Properties and qualities

Slope: 0 to 2 percent
Depth to restrictive feature: More than 80 inches
Natural drainage class: Well drained
Capacity of the most limiting layer to transmit water (Ksat): Very low to moderately low (0.00 to 0.06 in/hr)
Depth to water table: More than 80 inches
Frequency of flooding: None
Frequency of ponding: None
Calcium carbonate, maximum in profile: 15 percent
Gypsum, maximum in profile: 5 percent
Salinity, maximum in profile: Moderately saline to strongly saline (8.0 to 16.0 mmhos/cm)
Sodium adsorption ratio, maximum in profile: 20.0
Available water storage in profile: Moderate (about 6.3 inches)

Interpretive groups

Land capability classification (irrigated): None specified
Land capability classification (nonirrigated): 6s
Hydrologic Soil Group: D
Ecological site: Claypan (Cp) 10-14" p.z. (R052XN086MT)
Hydric soil rating: No

Description of Absher

Setting

Landform: Alluvial fans
Down-slope shape: Linear
Across-slope shape: Linear

Typical profile

E - 0 to 2 inches: clay loam
Btn - 2 to 9 inches: clay
Bknyz - 9 to 60 inches: silty clay

Properties and qualities

Slope: 0 to 2 percent
Depth to restrictive feature: More than 80 inches
Natural drainage class: Moderately well drained
Capacity of the most limiting layer to transmit water (Ksat): Very low to moderately low (0.00 to 0.06 in/hr)
Depth to water table: More than 80 inches
Frequency of flooding: None
Frequency of ponding: None
Calcium carbonate, maximum in profile: 15 percent
Gypsum, maximum in profile: 5 percent
Salinity, maximum in profile: Strongly saline (16.0 to 30.0 mmhos/cm)
Sodium adsorption ratio, maximum in profile: 70.0
Available water storage in profile: Low (about 5.5 inches)

Interpretive groups

Land capability classification (irrigated): None specified
Land capability classification (nonirrigated): 7s
Hydrologic Soil Group: D
Ecological site: Dense Clay (DC) 10-14" p.z. (R052XN172MT)
Hydric soil rating: No

Minor Components

Creed

Percent of map unit: 8 percent
Landform: Stream terraces
Down-slope shape: Linear
Across-slope shape: Linear
Ecological site: Claypan (Cp) 10-14" p.z. (R052XN086MT)
Hydric soil rating: No

Marvan

Percent of map unit: 5 percent
Landform: Alluvial fans
Down-slope shape: Linear
Across-slope shape: Linear
Ecological site: Clayey (Cy) 10-14" p.z. (R052XN162MT)
Hydric soil rating: No

Mckenzie

Percent of map unit: 2 percent
Landform: Depressions
Down-slope shape: Linear
Across-slope shape: Linear
Ecological site: Overflow (Ov) 10-14" p.z. (R052XN166MT)
Hydric soil rating: Yes

169C—Bascovy-Neldore complex, 2 to 8 percent slopes

Map Unit Setting

National map unit symbol: cpj7
Elevation: 3,200 to 4,200 feet
Mean annual precipitation: 11 to 14 inches
Mean annual air temperature: 39 to 46 degrees F
Frost-free period: 105 to 125 days
Farmland classification: Not prime farmland

Map Unit Composition

Bascovy and similar soils: 50 percent
Neldore and similar soils: 35 percent
Minor components: 15 percent
Estimates are based on observations, descriptions, and transects of the mapunit.

Description of Bascovy

Setting

Landform: Plains
Down-slope shape: Linear
Across-slope shape: Linear

Typical profile

A - 0 to 5 inches: silty clay
Bss - 5 to 11 inches: silty clay
Bssy - 11 to 25 inches: silty clay
Cr - 25 to 60 inches: unweathered bedrock

Properties and qualities

Slope: 2 to 8 percent
Depth to restrictive feature: 20 to 40 inches to paralithic bedrock
Natural drainage class: Well drained
Capacity of the most limiting layer to transmit water (Ksat): Very low to moderately low (0.00 to 0.06 in/hr)
Depth to water table: More than 80 inches
Frequency of flooding: None
Frequency of ponding: None
Calcium carbonate, maximum in profile: 5 percent
Gypsum, maximum in profile: 5 percent
Salinity, maximum in profile: Nonsaline to moderately saline (0.0 to 8.0 mmhos/cm)
Sodium adsorption ratio, maximum in profile: 13.0
Available water storage in profile: Low (about 3.8 inches)

Interpretive groups

Land capability classification (irrigated): None specified
Land capability classification (nonirrigated): 4e
Hydrologic Soil Group: D
Ecological site: Clayey (Cy) 10-14" p.z. (R052XN162MT)
Hydric soil rating: No

Description of Neldore

Setting

Landform: Plains
Down-slope shape: Linear
Across-slope shape: Linear

Typical profile

A - 0 to 4 inches: clay
C1 - 4 to 10 inches: clay
C2 - 10 to 18 inches: clay
Cr - 18 to 60 inches: unweathered bedrock

Properties and qualities

Slope: 2 to 8 percent
Depth to restrictive feature: 10 to 20 inches to paralithic bedrock
Natural drainage class: Well drained
Capacity of the most limiting layer to transmit water (Ksat): Moderately low to moderately high (0.06 to 0.20 in/hr)
Depth to water table: More than 80 inches
Frequency of flooding: None

Frequency of ponding: None
Salinity, maximum in profile: Nonsaline to slightly saline (0.0 to 4.0 mmhos/cm)
Available water storage in profile: Very low (about 2.6 inches)

Interpretive groups
Land capability classification (irrigated): None specified
Land capability classification (nonirrigated): 6e
Hydrologic Soil Group: D
Ecological site: Shallow Clay (SwC) 10-14" p.z. (R052XN179MT)
Hydric soil rating: No

Minor Components

Tanna
Percent of map unit: 5 percent
Landform: Plains
Down-slope shape: Linear
Across-slope shape: Linear
Ecological site: Clayey (Cy) 10-14" p.z. (R052XN162MT)
Hydric soil rating: No

Pylon
Percent of map unit: 4 percent
Landform: Plains
Down-slope shape: Linear
Across-slope shape: Linear
Ecological site: Clayey (Cy) 10-14" p.z. (R052XN162MT)
Hydric soil rating: No

Marvan
Percent of map unit: 3 percent
Landform: Alluvial fans
Down-slope shape: Linear
Across-slope shape: Linear
Ecological site: Clayey (Cy) 10-14" p.z. (R052XN162MT)
Hydric soil rating: No

Abor
Percent of map unit: 3 percent
Landform: Plains
Down-slope shape: Linear
Across-slope shape: Linear
Ecological site: Clayey (Cy) 10-14" p.z. (R052XN162MT)
Hydric soil rating: No

540B—Marvan silty clay, wet, 0 to 4 percent slopes

Map Unit Setting
National map unit symbol: cpvt
Elevation: 3,200 to 4,000 feet

Mean annual precipitation: 11 to 14 inches
Mean annual air temperature: 34 to 45 degrees F
Frost-free period: 105 to 125 days
Farmland classification: Not prime farmland

Map Unit Composition

Marvan and similar soils: 85 percent
Minor components: 15 percent
Estimates are based on observations, descriptions, and transects of the mapunit.

Description of Marvan

Setting

Landform: Till plains
Down-slope shape: Linear
Across-slope shape: Linear

Typical profile

A - 0 to 4 inches: silty clay
Bw - 4 to 13 inches: silty clay
Bss - 13 to 20 inches: silty clay
Bnssyz - 20 to 60 inches: clay

Properties and qualities

Slope: 0 to 4 percent
Depth to restrictive feature: More than 80 inches
Natural drainage class: Well drained
Capacity of the most limiting layer to transmit water (Ksat): Very low to moderately low (0.00 to 0.06 in/hr)
Depth to water table: About 30 to 60 inches
Frequency of flooding: None
Frequency of ponding: None
Calcium carbonate, maximum in profile: 10 percent
Gypsum, maximum in profile: 5 percent
Salinity, maximum in profile: Moderately saline to strongly saline (8.0 to 16.0 mmhos/cm)
Sodium adsorption ratio, maximum in profile: 38.0
Available water storage in profile: Moderate (about 8.3 inches)

Interpretive groups

Land capability classification (irrigated): None specified
Land capability classification (nonirrigated): 6w
Hydrologic Soil Group: D
Ecological site: Saline Overflow (SOv) 10-14" p.z. (R052XN171MT)
Hydric soil rating: No

Minor Components

Marias

Percent of map unit: 8 percent
Landform: Till plains
Down-slope shape: Linear
Across-slope shape: Linear
Ecological site: Clayey (Cy) 10-14" p.z. (R052XN162MT)
Hydric soil rating: No

Nobe

Percent of map unit: 5 percent
Landform: Alluvial fans
Down-slope shape: Linear
Across-slope shape: Linear
Ecological site: Saline Upland (SU) 10-14" p.z. (R052XN170MT)
Hydric soil rating: No

Mckenzie

Percent of map unit: 1 percent
Landform: Depressions
Down-slope shape: Linear
Across-slope shape: Linear
Ecological site: Overflow (Ov) 10-14" p.z. (R052XN166MT)
Hydric soil rating: Yes

Lardell

Percent of map unit: 1 percent
Landform: Depressions
Down-slope shape: Linear
Across-slope shape: Linear
Ecological site: Saline Upland (SU) 10-14" p.z. (R052XN170MT)
Hydric soil rating: Yes

Soil Information for All Uses

Soil Reports

The Soil Reports section includes various formatted tabular and narrative reports (tables) containing data for each selected soil map unit and each component of each unit. No aggregation of data has occurred as is done in reports in the Soil Properties and Qualities and Suitabilities and Limitations sections.

The reports contain soil interpretive information as well as basic soil properties and qualities. A description of each report (table) is included.

Land Classifications

This folder contains a collection of tabular reports that present a variety of soil groupings. The reports (tables) include all selected map units and components for each map unit. Land classifications are specified land use and management groupings that are assigned to soil areas because combinations of soil have similar behavior for specified practices. Most are based on soil properties and other factors that directly influence the specific use of the soil. Example classifications include ecological site classification, farmland classification, irrigated and nonirrigated land capability classification, and hydric rating.

Prime and other Important Farmlands

This table lists the map units in the survey area that are considered important farmlands. Important farmlands consist of prime farmland, unique farmland, and farmland of statewide or local importance. This list does not constitute a recommendation for a particular land use.

In an effort to identify the extent and location of important farmlands, the Natural Resources Conservation Service, in cooperation with other interested Federal, State, and local government organizations, has inventoried land that can be used for the production of the Nation's food supply.

Prime farmland is of major importance in meeting the Nation's short- and long-range needs for food and fiber. Because the supply of high-quality farmland is limited, the U.S. Department of Agriculture recognizes that responsible levels of government, as well as individuals, should encourage and facilitate the wise use of our Nation's prime farmland.

Prime farmland, as defined by the U.S. Department of Agriculture, is land that has the best combination of physical and chemical characteristics for producing food, feed, forage, fiber, and oilseed crops and is available for these uses. It could be cultivated land, pastureland, forestland, or other land, but it is not urban or built-up land or water areas. The soil quality, growing season, and moisture supply are those needed for the soil to economically produce sustained high yields of crops when proper management, including water management, and acceptable farming methods are applied. In general, prime farmland has an adequate and dependable supply of moisture from precipitation or irrigation, a favorable temperature and growing season, acceptable acidity or alkalinity, an acceptable salt and sodium content, and few or no rocks. The water supply is dependable and of adequate quality. Prime farmland is permeable to water and air. It is not excessively erodible or saturated with water for long periods, and it either is not frequently flooded during the growing season or is protected from flooding. Slope ranges mainly from 0 to 6 percent. More detailed information about the criteria for prime farmland is available at the local office of the Natural Resources Conservation Service.

For some of the soils identified in the table as prime farmland, measures that overcome a hazard or limitation, such as flooding, wetness, and droughtiness, are needed. Onsite evaluation is needed to determine whether or not the hazard or limitation has been overcome by corrective measures.

A recent trend in land use in some areas has been the loss of some prime farmland to industrial and urban uses. The loss of prime farmland to other uses puts pressure on marginal lands, which generally are more erodible, droughty, and less productive and cannot be easily cultivated.

Unique farmland is land other than prime farmland that is used for the production of specific high-value food and fiber crops, such as citrus, tree nuts, olives, cranberries, and other fruits and vegetables. It has the special combination of soil quality, growing season, moisture supply, temperature, humidity, air drainage, elevation, and aspect needed for the soil to economically produce sustainable high yields of these crops when properly managed. The water supply is dependable and of adequate quality. Nearness to markets is an additional consideration. Unique farmland is not based on national criteria. It commonly is in areas where there is a special microclimate, such as the wine country in California.

In some areas, land that does not meet the criteria for prime or unique farmland is considered to be *farmland of statewide importance* for the production of food, feed, fiber, forage, and oilseed crops. The criteria for defining and delineating farmland of statewide importance are determined by the appropriate State agencies. Generally, this land includes areas of soils that nearly meet the requirements for prime farmland and that economically produce high yields of crops when treated and managed according to acceptable farming methods. Some areas may produce as high a yield as prime farmland if conditions are favorable. Farmland of statewide importance may include tracts of land that have been designated for agriculture by State law.

In some areas that are not identified as having national or statewide importance, land is considered to be *farmland of local importance* for the production of food, feed, fiber, forage, and oilseed crops. This farmland is identified by the appropriate local agencies. Farmland of local importance may include tracts of land that have been designated for agriculture by local ordinance.

Report—Prime and other Important Farmlands

Prime and other Important Farmlands–Choteau-Conrad Area; Parts of Teton and Pondera Counties, Montana		
Map Symbol	**Map Unit Name**	**Farmland Classification**
40C	Kobase silty clay loam, 4 to 8 percent slopes	Farmland of statewide importance
114A	Gerdrum-Absher clay loams, 0 to 2 percent slopes	Not prime farmland
169C	Bascovy-Neldore complex, 2 to 8 percent slopes	Not prime farmland
540B	Marvan silty clay, wet, 0 to 4 percent slopes	Not prime farmland

Soil Physical Properties

This folder contains a collection of tabular reports that present soil physical properties. The reports (tables) include all selected map units and components for each map unit. Soil physical properties are measured or inferred from direct observations in the field or laboratory. Examples of soil physical properties include percent clay, organic matter, saturated hydraulic conductivity, available water capacity, and bulk density.

Engineering Properties

This table gives the engineering classifications and the range of engineering properties for the layers of each soil in the survey area.

Hydrologic soil group is a group of soils having similar runoff potential under similar storm and cover conditions. The criteria for determining Hydrologic soil group is found in the National Engineering Handbook, Chapter 7 issued May 2007(http://directives.sc.egov.usda.gov/OpenNonWebContent.aspx?content=17757.wba). Listing HSGs by soil map unit component and not by soil series is a new concept for the engineers. Past engineering references contained lists of HSGs by soil series. Soil series are continually being defined and redefined, and the list of soil series names changes so frequently as to make the task of maintaining a single national list virtually impossible. Therefore, the criteria is now used to calculate the HSG using the component soil properties and no such national series lists will be maintained. All such references are obsolete and their use should be discontinued. Soil properties that influence runoff potential are those that influence the minimum rate of infiltration for a bare soil after prolonged wetting and when not frozen. These properties are depth to a seasonal high water table, saturated hydraulic conductivity after prolonged wetting, and depth to a layer with a very slow water transmission rate. Changes in soil properties caused by land management or climate changes also cause the hydrologic soil group to change. The influence of ground cover is treated independently. There are four hydrologic soil groups, A, B, C, and D, and three dual groups, A/D, B/D, and C/D. In the dual groups, the first letter is for drained areas and the second letter is for undrained areas.

The four hydrologic soil groups are described in the following paragraphs:

Group A. Soils having a high infiltration rate (low runoff potential) when thoroughly wet. These consist mainly of deep, well drained to excessively drained sands or gravelly sands. These soils have a high rate of water transmission.

Group B. Soils having a moderate infiltration rate when thoroughly wet. These consist chiefly of moderately deep or deep, moderately well drained or well drained

soils that have moderately fine texture to moderately coarse texture. These soils have a moderate rate of water transmission.

Group C. Soils having a slow infiltration rate when thoroughly wet. These consist chiefly of soils having a layer that impedes the downward movement of water or soils of moderately fine texture or fine texture. These soils have a slow rate of water transmission.

Group D. Soils having a very slow infiltration rate (high runoff potential) when thoroughly wet. These consist chiefly of clays that have a high shrink-swell potential, soils that have a high water table, soils that have a claypan or clay layer at or near the surface, and soils that are shallow over nearly impervious material. These soils have a very slow rate of water transmission.

Depth to the upper and lower boundaries of each layer is indicated.

Texture is given in the standard terms used by the U.S. Department of Agriculture. These terms are defined according to percentages of sand, silt, and clay in the fraction of the soil that is less than 2 millimeters in diameter. "Loam," for example, is soil that is 7 to 27 percent clay, 28 to 50 percent silt, and less than 52 percent sand. If the content of particles coarser than sand is 15 percent or more, an appropriate modifier is added, for example, "gravelly."

Classification of the soils is determined according to the Unified soil classification system (ASTM, 2005) and the system adopted by the American Association of State Highway and Transportation Officials (AASHTO, 2004).

The Unified system classifies soils according to properties that affect their use as construction material. Soils are classified according to particle-size distribution of the fraction less than 3 inches in diameter and according to plasticity index, liquid limit, and organic matter content. Sandy and gravelly soils are identified as GW, GP, GM, GC, SW, SP, SM, and SC; silty and clayey soils as ML, CL, OL, MH, CH, and OH; and highly organic soils as PT. Soils exhibiting engineering properties of two groups can have a dual classification, for example, CL-ML.

The AASHTO system classifies soils according to those properties that affect roadway construction and maintenance. In this system, the fraction of a mineral soil that is less than 3 inches in diameter is classified in one of seven groups from A-1 through A-7 on the basis of particle-size distribution, liquid limit, and plasticity index. Soils in group A-1 are coarse grained and low in content of fines (silt and clay). At the other extreme, soils in group A-7 are fine grained. Highly organic soils are classified in group A-8 on the basis of visual inspection.

If laboratory data are available, the A-1, A-2, and A-7 groups are further classified as A-1-a, A-1-b, A-2-4, A-2-5, A-2-6, A-2-7, A-7-5, or A-7-6. As an additional refinement, the suitability of a soil as subgrade material can be indicated by a group index number. Group index numbers range from 0 for the best subgrade material to 20 or higher for the poorest.

Percentage of rock fragments larger than 10 inches in diameter and 3 to 10 inches in diameter are indicated as a percentage of the total soil on a dry-weight basis. The percentages are estimates determined mainly by converting volume percentage in the field to weight percentage. Three values are provided to identify the expected Low (L), Representative Value (R), and High (H).

Percentage (of soil particles) passing designated sieves is the percentage of the soil fraction less than 3 inches in diameter based on an ovendry weight. The sieves, numbers 4, 10, 40, and 200 (USA Standard Series), have openings of 4.76, 2.00, 0.420, and 0.074 millimeters, respectively. Estimates are based on laboratory tests

of soils sampled in the survey area and in nearby areas and on estimates made in the field. Three values are provided to identify the expected Low (L), Representative Value (R), and High (H).

Liquid limit and *plasticity index* (Atterberg limits) indicate the plasticity characteristics of a soil. The estimates are based on test data from the survey area or from nearby areas and on field examination. Three values are provided to identify the expected Low (L), Representative Value (R), and High (H).

References:

American Association of State Highway and Transportation Officials (AASHTO). 2004. Standard specifications for transportation materials and methods of sampling and testing. 24th edition.

American Society for Testing and Materials (ASTM). 2005. Standard classification of soils for engineering purposes. ASTM Standard D2487-00.

Absence of an entry indicates that the data were not estimated. The asterisk '*' denotes the representative texture; other possible textures follow the dash. The criteria for determining the hydrologic soil group for individual soil components is found in the National Engineering Handbook, Chapter 7 issued May 2007(http://directives.sc.egov.usda.gov/OpenNonWebContent.aspx?content=17757.wba). Three values are provided to identify the expected Low (L), Representative Value (R), and High (H).

Engineering Properties–Choteau-Conrad Area; Parts of Teton and Pondera Counties, Montana														
Map unit symbol and soil name	Pct. of map unit	Hydrologic group	Depth	USDA texture	Classification		Pct Fragments		Percentage passing sieve number—				Liquid limit	Plasticity index
					Unified	AASHTO	>10 inches	3-10 inches	4	10	40	200		
			In				*L-R-H*	*L-R-H*	*L-R-H*	*L-R-H*	*L-R-H*	*L-R-H*	*L-R-H*	*L-R-H*
40C—Kobase silty clay loam, 4 to 8 percent slopes														
Kobase	90	C	0-6	Silty clay loam	CL	A-6, A-7	0- 0- 0	0- 0- 0	95-98-100	90-95-100	85-93-100	80-88-95	30-38-45	10-15-20
			6-24	Silty clay loam, silty clay, clay	CL	A-6, A-7	0- 0- 0	0- 0- 0	95-98-100	90-95-100	85-93-100	75-85-95	35-40-45	15-20-25
			24-28	Silty clay loam, silty clay, clay	CL	A-6, A-7	0- 0- 0	0- 0- 0	95-98-100	90-95-100	85-93-100	75-85-95	35-40-45	15-20-25
			28-36	Silty clay loam, silty clay, clay	CL	A-6, A-7	0- 0- 0	0- 0- 0	95-98-100	90-95-100	85-93-100	75-85-95	35-40-45	15-20-25
			36-60	Clay, silty clay, silty clay loam	CL	A-7, A-6	0- 0- 0	0- 0- 0	95-98-100	90-95-100	85-93-100	75-85-95	35-40-45	15-20-25
Ethridge	5	C	0-6	Silty clay loam	CL	A-6, A-7	0- 0- 0	0- 0- 0	100-100-100	95-98-100	90-95-100	85-90-95	25-35-45	10-15-20
			6-19	Silty clay, silty clay loam, clay	CL	A-7	0- 0- 0	0- 0- 0	100-100-100	95-98-100	95-98-100	90-93-95	40-45-50	20-25-30
			19-48	Silty clay loam	—	—	0- 0- 0	0- 0- 0	100-100-100	95-98-100	90-95-100	85-90-95	30-40-50	10-18-25
			48-60	Silty clay loam, clay loam, silt loam	CL	A-6, A-7	0- 0- 0	0- 0- 0	100-100-100	95-98-100	90-95-100	85-90-95	30-40-50	10-18-25
Marias	3	D	0-5	Silty clay	CH, CL	A-7	0- 0- 0	0- 0- 0	100-100-100	100-100-100	95-98-100	90-93-95	40-50-60	20-30-40
			5-11	Clay, silty clay	CH, CL	A-7	0- 0- 0	0- 0- 0	100-100-100	100-100-100	90-95-100	75-85-95	40-55-70	25-38-50
			11-29	Clay, silty clay	CH, CL	A-7	0- 0- 0	0- 0- 0	100-100-100	100-100-100	90-95-100	75-85-95	40-55-70	25-38-50

Engineering Properties–Choteau-Conrad Area; Parts of Teton and Pondera Counties, Montana														
Map unit symbol and soil name	Pct. of map unit	Hydrologic group	Depth	USDA texture	Classification		Pct Fragments		Percentage passing sieve number—				Liquid limit	Plasticity index
					Unified	AASHTO	>10 inches	3-10 inches	4	10	40	200		
			In				*L-R-H*	*L-R-H*	*L-R-H*	*L-R-H*	*L-R-H*	*L-R-H*	*L-R-H*	*L-R-H*
			29-60	Clay, silty clay	CH, CL	A-7	0- 0- 0	0- 0- 0	100-100-100	100-100-100	90-95-100	75-85-95	40-55-70	25-38-50
Abor	2	D	0-5	Silty clay loam	CL	A-6, A-7	0- 0- 0	0- 0- 0	80-90-100	75-88-100	65-83-100	60-75-90	35-40-45	15-20-25
			5-14	Silty clay, clay, silty clay loam	CH, CL	A-6, A-7	0- 0- 0	0- 0- 0	80-90-100	75-88-100	65-83-100	60-78-95	35-50-65	20-33-45
			14-30	Silty clay, clay, silty clay loam	CH, CL	A-6, A-7	0- 0- 0	0- 0- 0	80-90-100	75-88-100	65-83-100	60-78-95	35-50-65	20-33-45
			30-60	Unweathered bedrock	—	—	—	—	—	—	—	—	—	—

Engineering Properties–Choteau-Conrad Area; Parts of Teton and Pondera Counties, Montana														
Map unit symbol and soil name	Pct. of map unit	Hydrologic group	Depth	USDA texture	Classification		Pct Fragments		Percentage passing sieve number—				Liquid limit	Plasticity index
					Unified	AASHTO	>10 inches	3-10 inches	4	10	40	200		
			In				*L-R-H*	*L-R-H*	*L-R-H*	*L-R-H*	*L-R-H*	*L-R-H*	*L-R-H*	*L-R-H*
114A—Gerdrum-Absher clay loams, 0 to 2 percent slopes														
Gerdrum	50	D	0-3	Clay loam	CL	A-6	0- 0- 0	0- 0- 0	80-90-100	75-88-100	65-80-95	60-75-90	25-33-40	10-15-20
			3-15	Clay, silty clay, silty clay loam	CH, CL	A-7	0- 0- 0	0- 0- 0	90-95-100	90-95-100	85-93-100	75-85-95	40-50-60	20-30-40
			15-25	Clay, silty clay, silty clay loam	CH, CL	A-7	0- 0- 0	0- 0- 0	90-95-100	90-95-100	85-93-100	75-85-95	40-50-60	20-30-40
			25-36	Clay loam, clay, silty clay loam	CH, CL, SC	A-6, A-7	0- 0- 0	0- 0- 0	90-95-100	90-95-100	80-88-95	45-60-75	35-45-55	15-25-35
			36-60	Silty clay, clay loam, clay	CH, CL, SC	A-6, A-7	0- 0- 0	0- 0- 0	90-95-100	90-95-100	80-88-95	45-60-75	35-45-55	15-25-35
Absher	35	D	0-2	Clay loam	CL	A-6	0- 0- 0	0- 0- 0	95-98-100	75-88-100	70-85-100	60-75-90	25-33-40	10-15-20
			2-9	Silty clay, clay, clay loam	CH, CL	A-7	0- 0- 0	0- 0- 0	95-98-100	75-88-100	70-85-100	60-78-95	40-50-60	20-30-40
			9-60	Silty clay, clay, clay loam	CH, CL	A-7	0- 0- 0	0- 0- 0	95-98-100	75-88-100	70-85-100	60-78-95	40-50-60	20-30-40
Creed	8	C	0-5	Loam	CL-ML, SC-SM	A-4	0- 0- 0	0- 0- 0	90-95-100	75-88-100	65-80-95	45-60-75	20-25-30	5-8 -10
			5-10	Silty clay, clay, silty clay loam	CL, CH	A-6, A-7	0- 0- 0	0- 0- 0	90-95-100	75-88-100	70-85-100	60-78-95	35-48-60	15-25-35
			10-26	Silty clay loam, clay loam, clay	CL, SC	A-6, A-7	0- 0- 0	0- 0- 0	90-95-100	75-88-100	60-80-100	35-63-90	30-40-50	15-20-25
			26-53	Silty clay loam, clay loam, clay	CL, SC	A-6, A-7	0- 0- 0	0- 0- 0	90-95-100	75-88-100	60-80-100	35-63-90	30-40-50	15-20-25

Engineering Properties–Choteau-Conrad Area; Parts of Teton and Pondera Counties, Montana														
Map unit symbol and soil name	Pct. of map unit	Hydrologic group	Depth	USDA texture	Classification		Pct Fragments		Percentage passing sieve number—				Liquid limit	Plasticity index
					Unified	AASHTO	>10 inches	3-10 inches	4	10	40	200		
			In				*L-R-H*	*L-R-H*	*L-R-H*	*L-R-H*	*L-R-H*	*L-R-H*	*L-R-H*	*L-R-H*
			53-60	Silty clay loam, clay loam, clay	CL, SC	A-6, A-7	0- 0- 0	0- 0- 0	90-95-100	75-88-100	60-80-100	35-63-90	30-40-50	15-20-25
Marvan	5	D	0-4	Clay	CH, CL	A-7	0- 0- 0	0- 0- 0	100-100-100	100-100-100	90-95-100	75-85-95	40-55-70	25-38-50
			4-13	Clay, silty clay	CH, CL	A-7	0- 0- 0	0- 0- 0	100-100-100	100-100-100	90-95-100	75-88-100	45-58-70	25-38-50
			13-20	Clay, silty clay	CH, CL	A-7	0- 0- 0	0- 0- 0	100-100-100	100-100-100	90-95-100	75-88-100	45-58-70	25-38-50
			20-60	Clay, silty clay	CH, CL	A-7	0- 0- 0	0- 0- 0	100-100-100	100-100-100	90-95-100	75-88-100	45-58-70	25-38-50
Mckenzie	2	D	0-7	Clay	CH	A-7	0- 0- 0	0- 0- 0	100-100-100	100-100-100	90-95-100	75-85-95	50-63-75	25-38-50
			7-30	Clay, silty clay	CH	A-7	0- 0- 0	0- 0- 0	100-100-100	100-100-100	95-98-100	75-85-95	50-63-75	25-38-50
			30-60	Clay, silty clay	CH	A-7	0- 0- 0	0- 0- 0	100-100-100	100-100-100	95-98-100	75-85-95	50-63-75	25-38-50

Engineering Properties–Choteau-Conrad Area; Parts of Teton and Pondera Counties, Montana														
Map unit symbol and soil name	Pct. of map unit	Hydrologic group	Depth	USDA texture	Classification		Pct Fragments		Percentage passing sieve number—				Liquid limit	Plasticity index
					Unified	AASHTO	>10 inches	3-10 inches	4	10	40	200		
			In				*L-R-H*	*L-R-H*	*L-R-H*	*L-R-H*	*L-R-H*	*L-R-H*	*L-R-H*	*L-R-H*
169C—Bascovy-Neldore complex, 2 to 8 percent slopes														
Bascovy	50	D	0-5	Silty clay	CH, CL	A-7	0- 0- 0	0- 0- 0	90-95-100	75-88-100	70-83-95	60-78-95	40-50-60	20-28-35
			5-11	Clay, silty clay	CH	A-7	0- 0- 0	0- 0- 0	90-95-100	75-88-100	70-83-95	60-78-95	50-60-70	25-35-45
			11-25	Clay, silty clay	CH	A-7	0- 0- 0	0- 0- 0	90-95-100	75-88-100	70-83-95	60-78-95	50-60-70	25-35-45
			25-60	Unweathered bedrock	—	—	—	—	—	—	—	—	—	—
Neldore	35	D	0-4	Clay	CH, CL	A-7	0- 0- 0	0- 5- 10	95-98-100	90-95-100	75-88-100	70-83-95	40-48-55	20-25-30
			4-10	Clay, silty clay	CH, CL	A-7	0- 0- 0	0- 0- 0	90-95-100	85-93-100	70-83-95	65-78-90	40-50-60	20-30-40
			10-18	Clay, silty clay	CH, CL	A-7	0- 0- 0	0- 3- 5	85-93-100	80-90-100	65-80-95	60-75-90	40-50-60	20-30-40
			18-60	Unweathered bedrock	—	—	—	—	—	—	—	—	—	—
Tanna	5	D	0-6	Clay loam	CL	A-6	0- 0- 0	0- 3- 5	90-95-100	90-95-100	85-90-95	70-75-80	25-33-40	10-15-20
			6-11	Clay loam, clay, silty clay loam	CL	A-6, A-7	0- 0- 0	0- 3- 5	90-95-100	90-95-100	80-88-95	75-83-90	35-40-45	15-20-25
			11-25	Silty clay loam, channery clay loam	CL-ML, GC-GM, SC-SM	A-2, A-4	0- 0- 0	0- 5- 10	40-70-100	30-63-95	25-53-80	20-45-70	25-28-30	5-8 -10
			25-35	Silty clay loam, channery clay loam, loam	CL-ML, GC-GM, SC-SM	A-2, A-4	0- 0- 0	0- 5- 10	40-70-100	30-63-95	25-53-80	20-45-70	25-28-30	5-8 -10

Engineering Properties–Choteau-Conrad Area; Parts of Teton and Pondera Counties, Montana														
Map unit symbol and soil name	Pct. of map unit	Hydrologic group	Depth	USDA texture	Classification		Pct Fragments		Percentage passing sieve number—				Liquid limit	Plasticity index
					Unified	AASHTO	>10 inches	3-10 inches	4	10	40	200		
			In				*L-R-H*	*L-R-H*	*L-R-H*	*L-R-H*	*L-R-H*	*L-R-H*	*L-R-H*	*L-R-H*
			35-60	Unweathered bedrock	—	—	—	—	—	—	—	—	—	—
Pylon	4	D	0-6	Silty clay loam	CL	A-6, A-7	0- 0- 0	0- 0- 0	95-98-100	95-98-100	95-98-100	85-90-95	35-40-45	15-20-25
			6-17	Silty clay, silty clay loam, clay	CH, CL	A-6, A-7	0- 0- 0	0- 0- 0	95-98-100	95-98-100	95-98-100	90-93-95	35-45-55	15-23-30
			17-36	Silty clay, silty clay loam, clay	CH, CL	A-6, A-7	0- 0- 0	0- 0- 0	95-98-100	95-98-100	95-98-100	90-93-95	35-45-55	15-23-30
			36-60	Weathered bedrock	—	—	—	—	—	—	—	—	—	—
Abor	3	D	0-5	Silty clay loam	CL	A-6, A-7	0- 0- 0	0- 0- 0	80-90-100	75-88-100	65-83-100	60-75-90	35-40-45	15-20-25
			5-14	Silty clay, clay, silty clay loam	CH, CL	A-6, A-7	0- 0- 0	0- 0- 0	80-90-100	75-88-100	65-83-100	60-78-95	35-50-65	20-33-45
			14-30	Silty clay, clay, silty clay loam	CH, CL	A-6, A-7	0- 0- 0	0- 0- 0	80-90-100	75-88-100	65-83-100	60-78-95	35-50-65	20-33-45
			30-60	Unweathered bedrock	—	—	—	—	—	—	—	—	—	—
Marvan	3	D	0-4	Clay	CH, CL	A-7	0- 0- 0	0- 0- 0	100-100-100	100-100-100	90-95-100	75-85-95	40-55-70	25-38-50
			4-13	Clay, silty clay	CH, CL	A-7	0- 0- 0	0- 0- 0	100-100-100	100-100-100	90-95-100	75-88-100	45-58-70	25-38-50
			13-20	Clay, silty clay	CH, CL	A-7	0- 0- 0	0- 0- 0	100-100-100	100-100-100	90-95-100	75-88-100	45-58-70	25-38-50
			20-60	Clay, silty clay	CH, CL	A-7	0- 0- 0	0- 0- 0	100-100-100	100-100-100	90-95-100	75-88-100	45-58-70	25-38-50

Engineering Properties–Choteau-Conrad Area; Parts of Teton and Pondera Counties, Montana														
Map unit symbol and soil name	Pct. of map unit	Hydrologic group	Depth	USDA texture	Classification		Pct Fragments		Percentage passing sieve number—				Liquid limit	Plasticity index
					Unified	AASHTO	>10 inches	3-10 inches	4	10	40	200		
			In				*L-R-H*	*L-R-H*	*L-R-H*	*L-R-H*	*L-R-H*	*L-R-H*	*L-R-H*	*L-R-H*
540B—Marvan silty clay, wet, 0 to 4 percent slopes														
Marvan	85	D	0-4	Silty clay	CH, CL	A-7	0- 0- 0	0- 0- 0	100-100-100	100-100-100	95-98-100	90-93-95	40-48-55	25-30-35
			4-13	Silty clay	CH, CL	A-7	0- 0- 0	0- 0- 0	100-100-100	100-100-100	95-98-100	90-93-95	40-48-55	25-30-35
			13-20	Clay, silty clay	CH	A-7	0- 0- 0	0- 0- 0	100-100-100	100-100-100	95-98-100	75-85-95	50-58-65	25-33-40
			20-60	Clay	CH	A-7	0- 0- 0	0- 0- 0	100-100-100	100-100-100	95-98-100	75-85-95	50-58-65	25-33-40
Marias	8	D	0-5	Silty clay	CH, CL	A-7	0- 0- 0	0- 0- 0	100-100-100	100-100-100	95-98-100	90-93-95	40-50-60	20-30-40
			5-11	Clay, silty clay	CH, CL	A-7	0- 0- 0	0- 0- 0	100-100-100	100-100-100	90-95-100	75-85-95	40-55-70	25-38-50
			11-29	Clay, silty clay	CH, CL	A-7	0- 0- 0	0- 0- 0	100-100-100	100-100-100	90-95-100	75-85-95	40-55-70	25-38-50
			29-60	Clay, silty clay	CH, CL	A-7	0- 0- 0	0- 0- 0	100-100-100	100-100-100	90-95-100	75-85-95	40-55-70	25-38-50
Nobe	5	D	0-1	Clay loam	CL	A-6	0- 0- 0	0- 3- 5	85-93-100	75-85-95	70-80-90	65-73-80	25-33-40	10-15-20
			1-3	Silty clay, clay	CH, CL	A-7	0- 0- 0	0- 0- 0	100-100-100	100-100-100	95-98-100	90-93-95	40-50-60	20-28-35
			3-20	Silty clay, clay, silty clay loam	CH, CL	A-7	0- 0- 0	0- 0- 0	100-100-100	100-100-100	95-98-100	90-93-95	40-50-60	20-28-35

Engineering Properties–Choteau-Conrad Area; Parts of Teton and Pondera Counties, Montana														
Map unit symbol and soil name	**Pct. of map unit**	**Hydrologic group**	**Depth**	**USDA texture**	**Classification**		**Pct Fragments**		**Percentage passing sieve number—**				**Liquid limit**	**Plasticity index**
					Unified	**AASHTO**	**>10 inches**	**3-10 inches**	**4**	**10**	**40**	**200**		
			In				*L-R-H*	*L-R-H*	*L-R-H*	*L-R-H*	*L-R-H*	*L-R-H*	*L-R-H*	*L-R-H*
			20-60	Silty clay, clay, silty clay loam	CH, CL	A-7	0- 0- 0	0- 0- 0	100-100-100	100-100-100	95-98-100	90-93-95	40-50-60	20-28-35
Lardell	1	D	0-6	Silty clay loam	CL	A-6, A-7	0- 0- 0	0- 0- 0	100-100-100	100-100-100	90-95-100	80-85-90	35-40-45	15-20-25
			6-18	Silty clay loam, clay loam	CL	A-6	0- 0- 0	0- 0- 0	100-100-100	100-100-100	90-95-100	75-83-90	30-35-40	10-15-20
			18-60	Clay loam	CL	A-6	0- 0- 0	0- 0- 0	100-100-100	100-100-100	80-85-90	65-75-85	25-33-40	10-15-20
Mckenzie	1	D	0-7	Clay	CH	A-7	0- 0- 0	0- 0- 0	100-100-100	100-100-100	90-95-100	75-85-95	50-63-75	25-38-50
			7-30	Clay, silty clay	CH	A-7	0- 0- 0	0- 0- 0	100-100-100	100-100-100	95-98-100	75-85-95	50-63-75	25-38-50
			30-60	Clay, silty clay	CH	A-7	0- 0- 0	0- 0- 0	100-100-100	100-100-100	95-98-100	75-85-95	50-63-75	25-38-50

References

American Association of State Highway and Transportation Officials (AASHTO). 2004. Standard specifications for transportation materials and methods of sampling and testing. 24th edition.

American Society for Testing and Materials (ASTM). 2005. Standard classification of soils for engineering purposes. ASTM Standard D2487-00.

Cowardin, L.M., V. Carter, F.C. Golet, and E.T. LaRoe. 1979. Classification of wetlands and deep-water habitats of the United States. U.S. Fish and Wildlife Service FWS/OBS-79/31.

Federal Register. July 13, 1994. Changes in hydric soils of the United States.

Federal Register. September 18, 2002. Hydric soils of the United States.

Hurt, G.W., and L.M. Vasilas, editors. Version 6.0, 2006. Field indicators of hydric soils in the United States.

National Research Council. 1995. Wetlands: Characteristics and boundaries.

Soil Survey Division Staff. 1993. Soil survey manual. Soil Conservation Service. U.S. Department of Agriculture Handbook 18. http://www.nrcs.usda.gov/wps/portal/nrcs/detail/national/soils/?cid=nrcs142p2_054262

Soil Survey Staff. 1999. Soil taxonomy: A basic system of soil classification for making and interpreting soil surveys. 2nd edition. Natural Resources Conservation Service, U.S. Department of Agriculture Handbook 436. http://www.nrcs.usda.gov/wps/portal/nrcs/detail/national/soils/?cid=nrcs142p2_053577

Soil Survey Staff. 2010. Keys to soil taxonomy. 11th edition. U.S. Department of Agriculture, Natural Resources Conservation Service. http://www.nrcs.usda.gov/wps/portal/nrcs/detail/national/soils/?cid=nrcs142p2_053580

Tiner, R.W., Jr. 1985. Wetlands of Delaware. U.S. Fish and Wildlife Service and Delaware Department of Natural Resources and Environmental Control, Wetlands Section.

United States Army Corps of Engineers, Environmental Laboratory. 1987. Corps of Engineers wetlands delineation manual. Waterways Experiment Station Technical Report Y-87-1.

United States Department of Agriculture, Natural Resources Conservation Service. National forestry manual. http://www.nrcs.usda.gov/wps/portal/nrcs/detail/soils/home/?cid=nrcs142p2_053374

United States Department of Agriculture, Natural Resources Conservation Service. National range and pasture handbook. http://www.nrcs.usda.gov/wps/portal/nrcs/detail/national/landuse/rangepasture/?cid=stelprdb1043084

United States Department of Agriculture, Natural Resources Conservation Service. National soil survey handbook, title 430-VI. http://www.nrcs.usda.gov/wps/portal/nrcs/detail/soils/scientists/?cid=nrcs142p2_054242

United States Department of Agriculture, Natural Resources Conservation Service. 2006. Land resource regions and major land resource areas of the United States, the Caribbean, and the Pacific Basin. U.S. Department of Agriculture Handbook 296. http://www.nrcs.usda.gov/wps/portal/nrcs/detail/national/soils/?cid=nrcs142p2_053624

United States Department of Agriculture, Soil Conservation Service. 1961. Land capability classification. U.S. Department of Agriculture Handbook 210. http://www.nrcs.usda.gov/Internet/FSE_DOCUMENTS/nrcs142p2_052290.pdf

STORAGE TANK
WEB SOIL SURVEY

United States Department of Agriculture

Natural Resources Conservation Service

A product of the National Cooperative Soil Survey, a joint effort of the United States Department of Agriculture and other Federal agencies, State agencies including the Agricultural Experiment Stations, and local participants

Custom Soil Resource Report for Choteau-Conrad Area; Parts of Teton and Pondera Counties, Montana

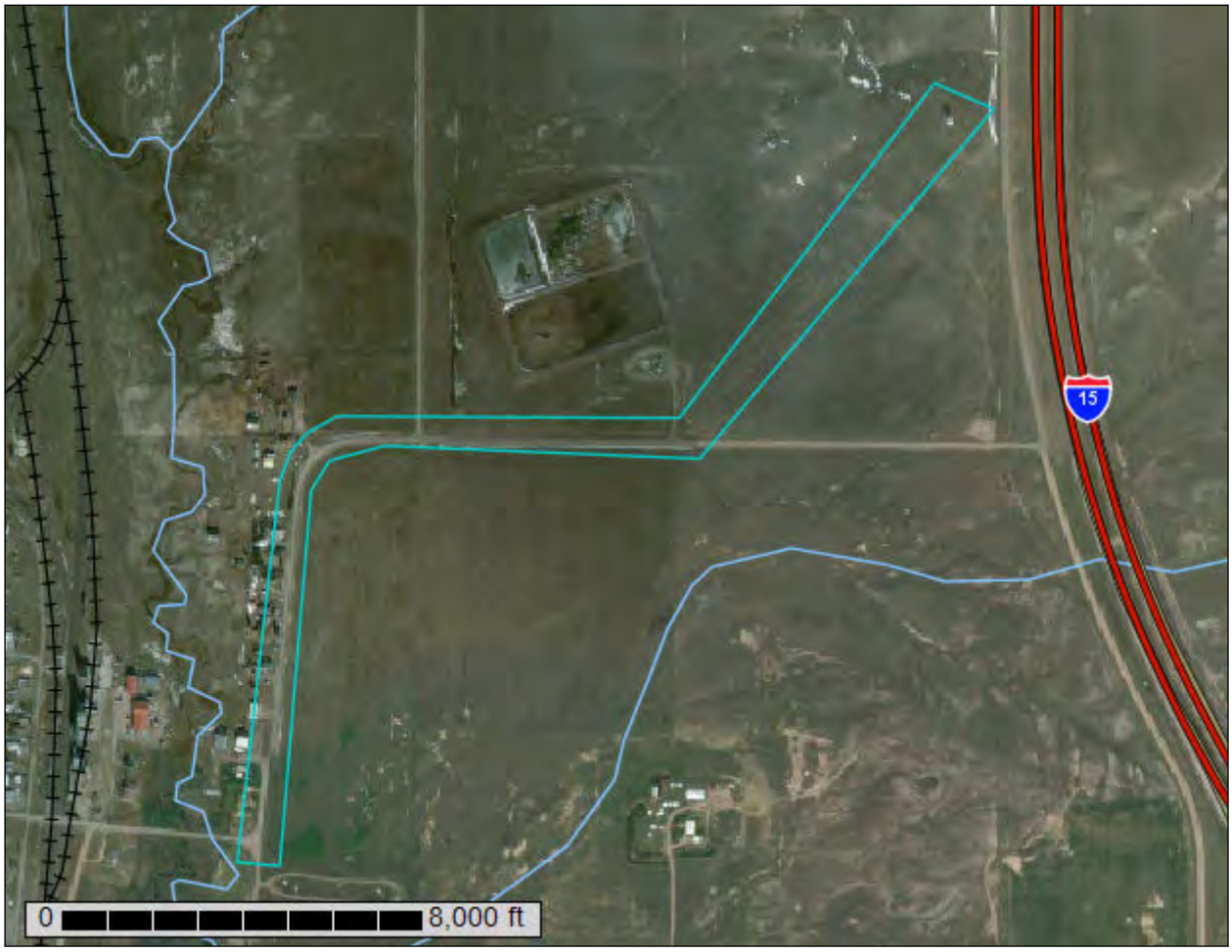

February 9, 2018

Preface

Soil surveys contain information that affects land use planning in survey areas. They highlight soil limitations that affect various land uses and provide information about the properties of the soils in the survey areas. Soil surveys are designed for many different users, including farmers, ranchers, foresters, agronomists, urban planners, community officials, engineers, developers, builders, and home buyers. Also, conservationists, teachers, students, and specialists in recreation, waste disposal, and pollution control can use the surveys to help them understand, protect, or enhance the environment.

Various land use regulations of Federal, State, and local governments may impose special restrictions on land use or land treatment. Soil surveys identify soil properties that are used in making various land use or land treatment decisions. The information is intended to help the land users identify and reduce the effects of soil limitations on various land uses. The landowner or user is responsible for identifying and complying with existing laws and regulations.

Although soil survey information can be used for general farm, local, and wider area planning, onsite investigation is needed to supplement this information in some cases. Examples include soil quality assessments (http://www.nrcs.usda.gov/wps/portal/nrcs/main/soils/health/) and certain conservation and engineering applications. For more detailed information, contact your local USDA Service Center (https://offices.sc.egov.usda.gov/locator/app?agency=nrcs) or your NRCS State Soil Scientist (http://www.nrcs.usda.gov/wps/portal/nrcs/detail/soils/contactus/?cid=nrcs142p2_053951).

Great differences in soil properties can occur within short distances. Some soils are seasonally wet or subject to flooding. Some are too unstable to be used as a foundation for buildings or roads. Clayey or wet soils are poorly suited to use as septic tank absorption fields. A high water table makes a soil poorly suited to basements or underground installations.

The National Cooperative Soil Survey is a joint effort of the United States Department of Agriculture and other Federal agencies, State agencies including the Agricultural Experiment Stations, and local agencies. The Natural Resources Conservation Service (NRCS) has leadership for the Federal part of the National Cooperative Soil Survey.

Information about soils is updated periodically. Updated information is available through the NRCS Web Soil Survey, the site for official soil survey information.

The U.S. Department of Agriculture (USDA) prohibits discrimination in all its programs and activities on the basis of race, color, national origin, age, disability, and where applicable, sex, marital status, familial status, parental status, religion, sexual orientation, genetic information, political beliefs, reprisal, or because all or a part of an individual's income is derived from any public assistance program. (Not all prohibited bases apply to all programs.) Persons with disabilities who require

alternative means for communication of program information (Braille, large print, audiotape, etc.) should contact USDA's TARGET Center at (202) 720-2600 (voice and TDD). To file a complaint of discrimination, write to USDA, Director, Office of Civil Rights, 1400 Independence Avenue, S.W., Washington, D.C. 20250-9410 or call (800) 795-3272 (voice) or (202) 720-6382 (TDD). USDA is an equal opportunity provider and employer.

Contents

Preface.....2
How Soil Surveys Are Made.....5
Soil Map.....8
Soil Map.....9
Legend.....10
Map Unit Legend.....12
Map Unit Descriptions.....12
Choteau-Conrad Area; Parts of Teton and Pondera Counties, Montana.....14
39B—Ethridge silty clay loam, 0 to 4 percent slopes.....14
150B—Marias-Linnet silty clays, 0 to 4 percent slopes.....15
164B—Scobey-Kevin clay loams, 0 to 4 percent slopes.....17
169C—Bascovy-Neldore complex, 2 to 8 percent slopes.....20
286F—Neldore-Bascovy-Rock outcrop complex, 25 to 60 percent slopes.....22
400—Havre-Fairway loams, 0 to 4 percent slopes, rarely flooded.....24
Soil Information for All Uses.....27
Soil Reports.....27
Land Classifications.....27
Prime and other Important Farmlands.....27
Soil Physical Properties.....29
Engineering Properties.....29
References.....38

How Soil Surveys Are Made

Soil surveys are made to provide information about the soils and miscellaneous areas in a specific area. They include a description of the soils and miscellaneous areas and their location on the landscape and tables that show soil properties and limitations affecting various uses. Soil scientists observed the steepness, length, and shape of the slopes; the general pattern of drainage; the kinds of crops and native plants; and the kinds of bedrock. They observed and described many soil profiles. A soil profile is the sequence of natural layers, or horizons, in a soil. The profile extends from the surface down into the unconsolidated material in which the soil formed or from the surface down to bedrock. The unconsolidated material is devoid of roots and other living organisms and has not been changed by other biological activity.

Currently, soils are mapped according to the boundaries of major land resource areas (MLRAs). MLRAs are geographically associated land resource units that share common characteristics related to physiography, geology, climate, water resources, soils, biological resources, and land uses (USDA, 2006). Soil survey areas typically consist of parts of one or more MLRA.

The soils and miscellaneous areas in a survey area occur in an orderly pattern that is related to the geology, landforms, relief, climate, and natural vegetation of the area. Each kind of soil and miscellaneous area is associated with a particular kind of landform or with a segment of the landform. By observing the soils and miscellaneous areas in the survey area and relating their position to specific segments of the landform, a soil scientist develops a concept, or model, of how they were formed. Thus, during mapping, this model enables the soil scientist to predict with a considerable degree of accuracy the kind of soil or miscellaneous area at a specific location on the landscape.

Commonly, individual soils on the landscape merge into one another as their characteristics gradually change. To construct an accurate soil map, however, soil scientists must determine the boundaries between the soils. They can observe only a limited number of soil profiles. Nevertheless, these observations, supplemented by an understanding of the soil-vegetation-landscape relationship, are sufficient to verify predictions of the kinds of soil in an area and to determine the boundaries.

Soil scientists recorded the characteristics of the soil profiles that they studied. They noted soil color, texture, size and shape of soil aggregates, kind and amount of rock fragments, distribution of plant roots, reaction, and other features that enable them to identify soils. After describing the soils in the survey area and determining their properties, the soil scientists assigned the soils to taxonomic classes (units). Taxonomic classes are concepts. Each taxonomic class has a set of soil characteristics with precisely defined limits. The classes are used as a basis for comparison to classify soils systematically. Soil taxonomy, the system of taxonomic classification used in the United States, is based mainly on the kind and character of soil properties and the arrangement of horizons within the profile. After the soil

scientists classified and named the soils in the survey area, they compared the individual soils with similar soils in the same taxonomic class in other areas so that they could confirm data and assemble additional data based on experience and research.

The objective of soil mapping is not to delineate pure map unit components; the objective is to separate the landscape into landforms or landform segments that have similar use and management requirements. Each map unit is defined by a unique combination of soil components and/or miscellaneous areas in predictable proportions. Some components may be highly contrasting to the other components of the map unit. The presence of minor components in a map unit in no way diminishes the usefulness or accuracy of the data. The delineation of such landforms and landform segments on the map provides sufficient information for the development of resource plans. If intensive use of small areas is planned, onsite investigation is needed to define and locate the soils and miscellaneous areas.

Soil scientists make many field observations in the process of producing a soil map. The frequency of observation is dependent upon several factors, including scale of mapping, intensity of mapping, design of map units, complexity of the landscape, and experience of the soil scientist. Observations are made to test and refine the soil-landscape model and predictions and to verify the classification of the soils at specific locations. Once the soil-landscape model is refined, a significantly smaller number of measurements of individual soil properties are made and recorded. These measurements may include field measurements, such as those for color, depth to bedrock, and texture, and laboratory measurements, such as those for content of sand, silt, clay, salt, and other components. Properties of each soil typically vary from one point to another across the landscape.

Observations for map unit components are aggregated to develop ranges of characteristics for the components. The aggregated values are presented. Direct measurements do not exist for every property presented for every map unit component. Values for some properties are estimated from combinations of other properties.

While a soil survey is in progress, samples of some of the soils in the area generally are collected for laboratory analyses and for engineering tests. Soil scientists interpret the data from these analyses and tests as well as the field-observed characteristics and the soil properties to determine the expected behavior of the soils under different uses. Interpretations for all of the soils are field tested through observation of the soils in different uses and under different levels of management. Some interpretations are modified to fit local conditions, and some new interpretations are developed to meet local needs. Data are assembled from other sources, such as research information, production records, and field experience of specialists. For example, data on crop yields under defined levels of management are assembled from farm records and from field or plot experiments on the same kinds of soil.

Predictions about soil behavior are based not only on soil properties but also on such variables as climate and biological activity. Soil conditions are predictable over long periods of time, but they are not predictable from year to year. For example, soil scientists can predict with a fairly high degree of accuracy that a given soil will have a high water table within certain depths in most years, but they cannot predict that a high water table will always be at a specific level in the soil on a specific date.

After soil scientists located and identified the significant natural bodies of soil in the survey area, they drew the boundaries of these bodies on aerial photographs and

identified each as a specific map unit. Aerial photographs show trees, buildings, fields, roads, and rivers, all of which help in locating boundaries accurately.

Soil Map

The soil map section includes the soil map for the defined area of interest, a list of soil map units on the map and extent of each map unit, and cartographic symbols displayed on the map. Also presented are various metadata about data used to produce the map, and a description of each soil map unit.

Custom Soil Resource Report
Soil Map

Map Scale: 1:8,050 if printed on A portrait (8.5" x 11") sheet.

N

Meters: 0 100 200 400 600

Feet: 0 350 700 1400 2100

Map projection: Web Mercator Corner coordinates: WGS84 Edge tics: UTM Zone 12N WGS84

MAP LEGEND

Area of Interest (AOI)
- Area of Interest (AOI)

Soils
- Soil Map Unit Polygons
- Soil Map Unit Lines
- Soil Map Unit Points

Special Point Features
- Blowout
- Borrow Pit
- Clay Spot
- Closed Depression
- Gravel Pit
- Gravelly Spot
- Landfill
- Lava Flow
- Marsh or swamp
- Mine or Quarry
- Miscellaneous Water
- Perennial Water
- Rock Outcrop
- Saline Spot
- Sandy Spot
- Severely Eroded Spot
- Sinkhole
- Slide or Slip
- Sodic Spot
- Spoil Area
- Stony Spot
- Very Stony Spot
- Wet Spot
- Other
- Special Line Features

Water Features
- Streams and Canals

Transportation
- Rails
- Interstate Highways
- US Routes
- Major Roads
- Local Roads

Background
- Aerial Photography

MAP INFORMATION

The soil surveys that comprise your AOI were mapped at 1:24,000.

Warning: Soil Map may not be valid at this scale.

Enlargement of maps beyond the scale of mapping can cause misunderstanding of the detail of mapping and accuracy of soil line placement. The maps do not show the small areas of contrasting soils that could have been shown at a more detailed scale.

Please rely on the bar scale on each map sheet for map measurements.

Source of Map: Natural Resources Conservation Service
Web Soil Survey URL:
Coordinate System: Web Mercator (EPSG:3857)

Maps from the Web Soil Survey are based on the Web Mercator projection, which preserves direction and shape but distorts distance and area. A projection that preserves area, such as the Albers equal-area conic projection, should be used if more accurate calculations of distance or area are required.

This product is generated from the USDA-NRCS certified data as of the version date(s) listed below.

Soil Survey Area: Choteau-Conrad Area; Parts of Teton and Pondera Counties, Montana
Survey Area Data: Version 15, Oct 3, 2017

Soil map units are labeled (as space allows) for map scales 1:50,000 or larger.

Date(s) aerial images were photographed: May 4, 2013—Feb 15, 2017

The orthophoto or other base map on which the soil lines were compiled and digitized probably differs from the background

MAP LEGEND

MAP INFORMATION

imagery displayed on these maps. As a result, some minor shifting of map unit boundaries may be evident.

Map Unit Legend

Map Unit Symbol	Map Unit Name	Acres in AOI	Percent of AOI
39B	Ethridge silty clay loam, 0 to 4 percent slopes	3.1	12.8%
150B	Marias-Linnet silty clays, 0 to 4 percent slopes	6.5	26.8%
164B	Scobey-Kevin clay loams, 0 to 4 percent slopes	7.0	28.9%
169C	Bascovy-Neldore complex, 2 to 8 percent slopes	3.3	13.7%
286F	Neldore-Bascovy-Rock outcrop complex, 25 to 60 percent slopes	4.3	17.8%
400	Havre-Fairway loams, 0 to 4 percent slopes, rarely flooded	0.0	0.1%
Totals for Area of Interest		**24.1**	**100.0%**

Map Unit Descriptions

The map units delineated on the detailed soil maps in a soil survey represent the soils or miscellaneous areas in the survey area. The map unit descriptions, along with the maps, can be used to determine the composition and properties of a unit.

A map unit delineation on a soil map represents an area dominated by one or more major kinds of soil or miscellaneous areas. A map unit is identified and named according to the taxonomic classification of the dominant soils. Within a taxonomic class there are precisely defined limits for the properties of the soils. On the landscape, however, the soils are natural phenomena, and they have the characteristic variability of all natural phenomena. Thus, the range of some observed properties may extend beyond the limits defined for a taxonomic class. Areas of soils of a single taxonomic class rarely, if ever, can be mapped without including areas of other taxonomic classes. Consequently, every map unit is made up of the soils or miscellaneous areas for which it is named and some minor components that belong to taxonomic classes other than those of the major soils.

Most minor soils have properties similar to those of the dominant soil or soils in the map unit, and thus they do not affect use and management. These are called noncontrasting, or similar, components. They may or may not be mentioned in a particular map unit description. Other minor components, however, have properties and behavioral characteristics divergent enough to affect use or to require different management. These are called contrasting, or dissimilar, components. They generally are in small areas and could not be mapped separately because of the scale used. Some small areas of strongly contrasting soils or miscellaneous areas are identified by a special symbol on the maps. If included in the database for a given area, the contrasting minor components are identified in the map unit descriptions along with some characteristics of each. A few areas of minor components may not have been observed, and consequently they are not

mentioned in the descriptions, especially where the pattern was so complex that it was impractical to make enough observations to identify all the soils and miscellaneous areas on the landscape.

The presence of minor components in a map unit in no way diminishes the usefulness or accuracy of the data. The objective of mapping is not to delineate pure taxonomic classes but rather to separate the landscape into landforms or landform segments that have similar use and management requirements. The delineation of such segments on the map provides sufficient information for the development of resource plans. If intensive use of small areas is planned, however, onsite investigation is needed to define and locate the soils and miscellaneous areas.

An identifying symbol precedes the map unit name in the map unit descriptions. Each description includes general facts about the unit and gives important soil properties and qualities.

Soils that have profiles that are almost alike make up a *soil series*. Except for differences in texture of the surface layer, all the soils of a series have major horizons that are similar in composition, thickness, and arrangement.

Soils of one series can differ in texture of the surface layer, slope, stoniness, salinity, degree of erosion, and other characteristics that affect their use. On the basis of such differences, a soil series is divided into *soil phases*. Most of the areas shown on the detailed soil maps are phases of soil series. The name of a soil phase commonly indicates a feature that affects use or management. For example, Alpha silt loam, 0 to 2 percent slopes, is a phase of the Alpha series.

Some map units are made up of two or more major soils or miscellaneous areas. These map units are complexes, associations, or undifferentiated groups.

A *complex* consists of two or more soils or miscellaneous areas in such an intricate pattern or in such small areas that they cannot be shown separately on the maps. The pattern and proportion of the soils or miscellaneous areas are somewhat similar in all areas. Alpha-Beta complex, 0 to 6 percent slopes, is an example.

An *association* is made up of two or more geographically associated soils or miscellaneous areas that are shown as one unit on the maps. Because of present or anticipated uses of the map units in the survey area, it was not considered practical or necessary to map the soils or miscellaneous areas separately. The pattern and relative proportion of the soils or miscellaneous areas are somewhat similar. Alpha-Beta association, 0 to 2 percent slopes, is an example.

An *undifferentiated group* is made up of two or more soils or miscellaneous areas that could be mapped individually but are mapped as one unit because similar interpretations can be made for use and management. The pattern and proportion of the soils or miscellaneous areas in a mapped area are not uniform. An area can be made up of only one of the major soils or miscellaneous areas, or it can be made up of all of them. Alpha and Beta soils, 0 to 2 percent slopes, is an example.

Some surveys include *miscellaneous areas*. Such areas have little or no soil material and support little or no vegetation. Rock outcrop is an example.

Choteau-Conrad Area; Parts of Teton and Pondera Counties, Montana

39B—Ethridge silty clay loam, 0 to 4 percent slopes

Map Unit Setting

National map unit symbol: cprx
Elevation: 3,200 to 4,000 feet
Mean annual precipitation: 11 to 14 inches
Mean annual air temperature: 39 to 45 degrees F
Frost-free period: 105 to 125 days
Farmland classification: Prime farmland if irrigated

Map Unit Composition

Ethridge and similar soils: 85 percent
Minor components: 15 percent
Estimates are based on observations, descriptions, and transects of the mapunit.

Description of Ethridge

Setting

Landform: Stream terraces
Down-slope shape: Linear
Across-slope shape: Linear

Typical profile

Ap - 0 to 6 inches: silty clay loam
Bt - 6 to 19 inches: silty clay
Bk - 19 to 48 inches: silty clay loam
Bky - 48 to 60 inches: silty clay loam

Properties and qualities

Slope: 0 to 4 percent
Depth to restrictive feature: More than 80 inches
Natural drainage class: Well drained
Capacity of the most limiting layer to transmit water (Ksat): Moderately low to moderately high (0.06 to 0.20 in/hr)
Depth to water table: More than 80 inches
Frequency of flooding: None
Frequency of ponding: None
Calcium carbonate, maximum in profile: 15 percent
Gypsum, maximum in profile: 3 percent
Salinity, maximum in profile: Nonsaline to slightly saline (0.0 to 4.0 mmhos/cm)
Sodium adsorption ratio, maximum in profile: 5.0
Available water storage in profile: High (about 9.8 inches)

Interpretive groups

Land capability classification (irrigated): 3e
Land capability classification (nonirrigated): 3e
Hydrologic Soil Group: C
Ecological site: Clayey (Cy) 10-14" p.z. (R052XN162MT)
Hydric soil rating: No

Minor Components

Kobase

Percent of map unit: 6 percent

Landform: Alluvial fans
Down-slope shape: Linear
Across-slope shape: Linear
Ecological site: Clayey (Cy) 10-14" p.z. (R052XN162MT)
Hydric soil rating: No

Richey

Percent of map unit: 5 percent
Landform: Alluvial fans
Down-slope shape: Linear
Across-slope shape: Linear
Ecological site: Clayey (Cy) 10-14" p.z. (R052XN162MT)
Hydric soil rating: No

Marias

Percent of map unit: 4 percent
Landform: Alluvial fans
Down-slope shape: Linear
Across-slope shape: Linear
Ecological site: Clayey (Cy) 10-14" p.z. (R052XN162MT)
Hydric soil rating: No

150B—Marias-Linnet silty clays, 0 to 4 percent slopes

Map Unit Setting

National map unit symbol: cphc
Elevation: 3,300 to 4,000 feet
Mean annual precipitation: 11 to 14 inches
Mean annual air temperature: 34 to 45 degrees F
Frost-free period: 105 to 125 days
Farmland classification: Not prime farmland

Map Unit Composition

Marias and similar soils: 55 percent
Linnet and similar soils: 35 percent
Minor components: 10 percent
Estimates are based on observations, descriptions, and transects of the mapunit.

Description of Marias

Setting

Landform: Till plains
Down-slope shape: Linear
Across-slope shape: Linear

Typical profile

A - 0 to 5 inches: silty clay
Bw - 5 to 11 inches: silty clay
Bss - 11 to 29 inches: silty clay
Bssy - 29 to 60 inches: silty clay

Properties and qualities

Slope: 0 to 4 percent
Depth to restrictive feature: More than 80 inches
Natural drainage class: Well drained
Capacity of the most limiting layer to transmit water (Ksat): Very low to moderately low (0.00 to 0.06 in/hr)
Depth to water table: More than 80 inches
Frequency of flooding: None
Frequency of ponding: None
Calcium carbonate, maximum in profile: 10 percent
Gypsum, maximum in profile: 6 percent
Salinity, maximum in profile: Nonsaline to slightly saline (0.0 to 4.0 mmhos/cm)
Sodium adsorption ratio, maximum in profile: 10.0
Available water storage in profile: Moderate (about 8.5 inches)

Interpretive groups

Land capability classification (irrigated): 4e
Land capability classification (nonirrigated): 4e
Hydrologic Soil Group: D
Ecological site: Clayey (Cy) 10-14" p.z. (R052XN162MT)
Hydric soil rating: No

Description of Linnet

Setting

Landform: Till plains
Down-slope shape: Linear
Across-slope shape: Linear

Typical profile

A - 0 to 5 inches: silty clay
Bt - 5 to 13 inches: silty clay
Bk - 13 to 48 inches: silty clay
BCy - 48 to 60 inches: clay

Properties and qualities

Slope: 0 to 4 percent
Depth to restrictive feature: More than 80 inches
Natural drainage class: Well drained
Capacity of the most limiting layer to transmit water (Ksat): Moderately low to moderately high (0.06 to 0.20 in/hr)
Depth to water table: More than 80 inches
Frequency of flooding: None
Frequency of ponding: None
Calcium carbonate, maximum in profile: 10 percent
Gypsum, maximum in profile: 5 percent
Salinity, maximum in profile: Nonsaline to slightly saline (0.0 to 4.0 mmhos/cm)
Sodium adsorption ratio, maximum in profile: 13.0
Available water storage in profile: High (about 9.0 inches)

Interpretive groups

Land capability classification (irrigated): 4e
Land capability classification (nonirrigated): 4e
Hydrologic Soil Group: C
Ecological site: Clayey (Cy) 10-14" p.z. (R052XN162MT)
Hydric soil rating: No

Minor Components

Ethridge

Percent of map unit: 6 percent
Landform: Till plains
Down-slope shape: Linear
Across-slope shape: Linear
Ecological site: Clayey (Cy) 10-14" p.z. (R052XN162MT)
Hydric soil rating: No

Mckenzie

Percent of map unit: 2 percent
Landform: Depressions
Down-slope shape: Linear
Across-slope shape: Linear
Ecological site: Overflow (Ov) 10-14" p.z. (R052XN166MT)
Hydric soil rating: Yes

Lothair

Percent of map unit: 2 percent
Landform: Alluvial fans
Down-slope shape: Linear
Across-slope shape: Linear
Ecological site: Clayey (Cy) 10-14" p.z. (R052XN162MT)
Hydric soil rating: No

164B—Scobey-Kevin clay loams, 0 to 4 percent slopes

Map Unit Setting

National map unit symbol: 2t3kb
Elevation: 2,490 to 3,800 feet
Mean annual precipitation: 10 to 14 inches
Mean annual air temperature: 39 to 45 degrees F
Frost-free period: 105 to 125 days
Farmland classification: Prime farmland if irrigated

Map Unit Composition

Scobey and similar soils: 50 percent
Kevin and similar soils: 35 percent
Minor components: 15 percent
Estimates are based on observations, descriptions, and transects of the mapunit.

Description of Scobey

Setting

Landform: Flats
Landform position (three-dimensional): Talf
Down-slope shape: Linear
Across-slope shape: Linear

Parent material: Clayey till

Typical profile

Ap - 0 to 6 inches: clay loam
Bt - 6 to 15 inches: clay
Bk1 - 15 to 29 inches: clay loam
Bk2 - 29 to 43 inches: clay loam
BCyz - 43 to 61 inches: clay loam
Cz - 61 to 79 inches: clay loam

Properties and qualities

Slope: 0 to 4 percent
Depth to restrictive feature: More than 80 inches
Natural drainage class: Well drained
Capacity of the most limiting layer to transmit water (Ksat): Moderately low to moderately high (0.06 to 0.20 in/hr)
Depth to water table: More than 80 inches
Frequency of flooding: None
Frequency of ponding: None
Calcium carbonate, maximum in profile: 14 percent
Gypsum, maximum in profile: 5 percent
Salinity, maximum in profile: Very slightly saline to moderately saline (2.0 to 8.0 mmhos/cm)
Sodium adsorption ratio, maximum in profile: 12.0
Available water storage in profile: High (about 9.8 inches)

Interpretive groups

Land capability classification (irrigated): 2e
Land capability classification (nonirrigated): 3e
Hydrologic Soil Group: C
Ecological site: Loamy (Lo) Dry Grassland (R052XY032MT), Loamy (Lo) Dry Shrubland (R052XY712MT), Silty (Si) 10-14" p.z. (R052XN161MT)
Hydric soil rating: No

Description of Kevin

Setting

Landform: Flats
Landform position (three-dimensional): Rise
Down-slope shape: Linear
Across-slope shape: Linear
Parent material: Fine-loamy till

Typical profile

Ap - 0 to 6 inches: clay loam
Bt - 6 to 9 inches: clay loam
Bk1 - 9 to 23 inches: clay loam
Bk2 - 23 to 41 inches: clay loam
BCyz - 41 to 58 inches: clay loam
Cz - 58 to 79 inches: clay loam

Properties and qualities

Slope: 0 to 4 percent
Depth to restrictive feature: More than 80 inches
Natural drainage class: Well drained
Capacity of the most limiting layer to transmit water (Ksat): Moderately low to moderately high (0.06 to 0.20 in/hr)

Depth to water table: More than 80 inches
Frequency of flooding: None
Frequency of ponding: None
Calcium carbonate, maximum in profile: 14 percent
Gypsum, maximum in profile: 5 percent
Salinity, maximum in profile: Very slightly saline to moderately saline (2.0 to 8.0 mmhos/cm)
Sodium adsorption ratio, maximum in profile: 12.0
Available water storage in profile: High (about 10.0 inches)

Interpretive groups

Land capability classification (irrigated): 2e
Land capability classification (nonirrigated): 3e
Hydrologic Soil Group: C
Ecological site: Loamy (Lo) Dry Grassland (R052XY032MT), Loamy (Lo) Dry Shrubland (R052XY712MT), Silty (Si) 10-14" p.z. (R052XN161MT)
Hydric soil rating: No

Minor Components

Hillon

Percent of map unit: 8 percent
Landform: Rises
Landform position (two-dimensional): Summit, shoulder
Down-slope shape: Convex
Across-slope shape: Linear
Ecological site: Limy (Ly) Dry Grassland (R052XY030MT), Limy (Ly) Dry Shrubland (R052XY710MT), Silty (Si) 10-14" p.z. (R052XN161MT)
Hydric soil rating: No

Elloam

Percent of map unit: 3 percent
Landform: Flats
Landform position (three-dimensional): Dip
Down-slope shape: Linear
Across-slope shape: Linear
Ecological site: Thin Claypan (Tcp) Dry Grassland (R052XY165MT), Thin Claypan (Tcp) Dry Shrubland (R052XY731MT), Claypan (Cp) 10-14" p.z. (R052XN086MT)
Hydric soil rating: No

Nishon

Percent of map unit: 2 percent
Landform: Depressions
Down-slope shape: Concave
Across-slope shape: Concave
Ecological site: Recharge Closed Depression (Cdr) (R052XY071MT), Overflow (Ov) 10-14" p.z. (R052XN166MT)
Hydric soil rating: Yes

Acel

Percent of map unit: 2 percent
Landform: Swales
Down-slope shape: Concave
Across-slope shape: Linear
Ecological site: Swale (Se) Dry Grassland (R052XY062MT), Swale (Se) Dry Shrubland (R052XY730MT), Clayey (Cy) 10-14" p.z. (R052XN162MT)

Hydric soil rating: No

169C—Bascovy-Neldore complex, 2 to 8 percent slopes

Map Unit Setting

National map unit symbol: cpj7
Elevation: 3,200 to 4,200 feet
Mean annual precipitation: 11 to 14 inches
Mean annual air temperature: 39 to 46 degrees F
Frost-free period: 105 to 125 days
Farmland classification: Not prime farmland

Map Unit Composition

Bascovy and similar soils: 50 percent
Neldore and similar soils: 35 percent
Minor components: 15 percent
Estimates are based on observations, descriptions, and transects of the mapunit.

Description of Bascovy

Setting

Landform: Plains
Down-slope shape: Linear
Across-slope shape: Linear

Typical profile

A - 0 to 5 inches: silty clay
Bss - 5 to 11 inches: silty clay
Bssy - 11 to 25 inches: silty clay
Cr - 25 to 60 inches: unweathered bedrock

Properties and qualities

Slope: 2 to 8 percent
Depth to restrictive feature: 20 to 40 inches to paralithic bedrock
Natural drainage class: Well drained
Capacity of the most limiting layer to transmit water (Ksat): Very low to moderately low (0.00 to 0.06 in/hr)
Depth to water table: More than 80 inches
Frequency of flooding: None
Frequency of ponding: None
Calcium carbonate, maximum in profile: 5 percent
Gypsum, maximum in profile: 5 percent
Salinity, maximum in profile: Nonsaline to moderately saline (0.0 to 8.0 mmhos/cm)
Sodium adsorption ratio, maximum in profile: 13.0
Available water storage in profile: Low (about 3.8 inches)

Interpretive groups

Land capability classification (irrigated): None specified
Land capability classification (nonirrigated): 4e

Hydrologic Soil Group: D
Ecological site: Clayey (Cy) 10-14" p.z. (R052XN162MT)
Hydric soil rating: No

Description of Neldore

Setting

Landform: Plains
Down-slope shape: Linear
Across-slope shape: Linear

Typical profile

A - 0 to 4 inches: clay
C1 - 4 to 10 inches: clay
C2 - 10 to 18 inches: clay
Cr - 18 to 60 inches: unweathered bedrock

Properties and qualities

Slope: 2 to 8 percent
Depth to restrictive feature: 10 to 20 inches to paralithic bedrock
Natural drainage class: Well drained
Capacity of the most limiting layer to transmit water (Ksat): Moderately low to moderately high (0.06 to 0.20 in/hr)
Depth to water table: More than 80 inches
Frequency of flooding: None
Frequency of ponding: None
Salinity, maximum in profile: Nonsaline to slightly saline (0.0 to 4.0 mmhos/cm)
Available water storage in profile: Very low (about 2.6 inches)

Interpretive groups

Land capability classification (irrigated): None specified
Land capability classification (nonirrigated): 6e
Hydrologic Soil Group: D
Ecological site: Shallow Clay (SwC) 10-14" p.z. (R052XN179MT)
Hydric soil rating: No

Minor Components

Tanna

Percent of map unit: 5 percent
Landform: Plains
Down-slope shape: Linear
Across-slope shape: Linear
Ecological site: Clayey (Cy) 10-14" p.z. (R052XN162MT)
Hydric soil rating: No

Pylon

Percent of map unit: 4 percent
Landform: Plains
Down-slope shape: Linear
Across-slope shape: Linear
Ecological site: Clayey (Cy) 10-14" p.z. (R052XN162MT)
Hydric soil rating: No

Marvan

Percent of map unit: 3 percent
Landform: Alluvial fans
Down-slope shape: Linear

Across-slope shape: Linear
Ecological site: Clayey (Cy) 10-14" p.z. (R052XN162MT)
Hydric soil rating: No

Abor

Percent of map unit: 3 percent
Landform: Plains
Down-slope shape: Linear
Across-slope shape: Linear
Ecological site: Clayey (Cy) 10-14" p.z. (R052XN162MT)
Hydric soil rating: No

286F—Neldore-Bascovy-Rock outcrop complex, 25 to 60 percent slopes

Map Unit Setting

National map unit symbol: cpp4
Elevation: 3,200 to 4,000 feet
Mean annual precipitation: 11 to 14 inches
Mean annual air temperature: 39 to 46 degrees F
Frost-free period: 105 to 125 days
Farmland classification: Not prime farmland

Map Unit Composition

Neldore and similar soils: 45 percent
Rock outcrop: 20 percent
Bascovy and similar soils: 20 percent
Minor components: 15 percent
Estimates are based on observations, descriptions, and transects of the mapunit.

Description of Neldore

Setting

Landform: Hills
Down-slope shape: Linear
Across-slope shape: Linear

Typical profile

A - 0 to 4 inches: clay
C1 - 4 to 10 inches: clay
C2 - 10 to 18 inches: clay
Cr - 18 to 60 inches: unweathered bedrock

Properties and qualities

Slope: 25 to 60 percent
Depth to restrictive feature: 10 to 20 inches to paralithic bedrock
Natural drainage class: Well drained
Capacity of the most limiting layer to transmit water (Ksat): Moderately low to moderately high (0.06 to 0.20 in/hr)
Depth to water table: More than 80 inches
Frequency of flooding: None

Frequency of ponding: None
Salinity, maximum in profile: Nonsaline to slightly saline (0.0 to 4.0 mmhos/cm)
Available water storage in profile: Very low (about 2.6 inches)

Interpretive groups
Land capability classification (irrigated): None specified
Land capability classification (nonirrigated): 7e
Hydrologic Soil Group: D
Ecological site: Shallow Clay (SwC) 10-14" p.z. (R052XN179MT)
Hydric soil rating: No

Description of Bascovy

Setting
Landform: Hills
Down-slope shape: Linear
Across-slope shape: Linear

Typical profile
A - 0 to 5 inches: silty clay
Bss - 5 to 11 inches: silty clay
Bssy - 11 to 25 inches: silty clay
Cr - 25 to 60 inches: unweathered bedrock

Properties and qualities
Slope: 25 to 45 percent
Depth to restrictive feature: 20 to 40 inches to paralithic bedrock
Natural drainage class: Well drained
Capacity of the most limiting layer to transmit water (Ksat): Very low to moderately low (0.00 to 0.06 in/hr)
Depth to water table: More than 80 inches
Frequency of flooding: None
Frequency of ponding: None
Calcium carbonate, maximum in profile: 5 percent
Gypsum, maximum in profile: 5 percent
Salinity, maximum in profile: Nonsaline to moderately saline (0.0 to 8.0 mmhos/cm)
Sodium adsorption ratio, maximum in profile: 13.0
Available water storage in profile: Low (about 3.8 inches)

Interpretive groups
Land capability classification (irrigated): None specified
Land capability classification (nonirrigated): 7e
Hydrologic Soil Group: D
Ecological site: Clayey-Steep (CyStp) 10-14" p.z. (R052XN164MT)
Hydric soil rating: No

Minor Components

Yawdim
Percent of map unit: 12 percent
Landform: Hills
Down-slope shape: Linear
Across-slope shape: Linear
Ecological site: Shallow Clay (SwC) 10-14" p.z. (R052XN179MT)
Hydric soil rating: No

Kobase

Percent of map unit: 3 percent
Landform: Hills
Down-slope shape: Linear
Across-slope shape: Linear
Ecological site: Clayey (Cy) 10-14" p.z. (R052XN162MT)
Hydric soil rating: No

400—Havre-Fairway loams, 0 to 4 percent slopes, rarely flooded

Map Unit Setting

National map unit symbol: cps1
Elevation: 3,200 to 4,600 feet
Mean annual precipitation: 12 to 14 inches
Mean annual air temperature: 37 to 45 degrees F
Frost-free period: 105 to 125 days
Farmland classification: Farmland of statewide importance

Map Unit Composition

Havre and similar soils: 45 percent
Fairway and similar soils: 40 percent
Minor components: 15 percent
Estimates are based on observations, descriptions, and transects of the mapunit.

Description of Havre

Setting

Landform: Flood plains
Down-slope shape: Linear
Across-slope shape: Linear

Typical profile

A - 0 to 8 inches: loam
C1 - 8 to 20 inches: stratified fine sandy loam to clay loam
C2 - 20 to 60 inches: stratified fine sandy loam to clay loam

Properties and qualities

Slope: 0 to 4 percent
Depth to restrictive feature: More than 80 inches
Natural drainage class: Well drained
Capacity of the most limiting layer to transmit water (Ksat): Moderately high to high (0.57 to 1.98 in/hr)
Depth to water table: More than 80 inches
Frequency of flooding: Rare
Frequency of ponding: None
Calcium carbonate, maximum in profile: 10 percent
Salinity, maximum in profile: Nonsaline to very slightly saline (0.0 to 3.0 mmhos/cm)
Sodium adsorption ratio, maximum in profile: 5.0

Available water storage in profile: High (about 9.7 inches)

Interpretive groups

Land capability classification (irrigated): None specified
Land capability classification (nonirrigated): 4e
Hydrologic Soil Group: B
Ecological site: Silty (Si) 10-14" p.z. (R052XN161MT)
Hydric soil rating: No

Description of Fairway

Setting

Landform: Flood plains
Down-slope shape: Linear
Across-slope shape: Linear

Typical profile

A1 - 0 to 9 inches: loam
A2 - 9 to 15 inches: loam
Cg - 15 to 48 inches: silty clay loam
2C - 48 to 60 inches: very gravelly sand

Properties and qualities

Slope: 0 to 2 percent
Depth to restrictive feature: More than 80 inches
Natural drainage class: Somewhat poorly drained
Capacity of the most limiting layer to transmit water (Ksat): Moderately high to high (0.57 to 1.98 in/hr)
Depth to water table: About 36 to 60 inches
Frequency of flooding: None
Frequency of ponding: None
Calcium carbonate, maximum in profile: 15 percent
Available water storage in profile: Moderate (about 9.0 inches)

Interpretive groups

Land capability classification (irrigated): None specified
Land capability classification (nonirrigated): 3e
Hydrologic Soil Group: B
Ecological site: Subirrigated (Sb) 10-14" p.z. (R052XN169MT)
Hydric soil rating: No

Minor Components

Meadowcreek

Percent of map unit: 5 percent
Landform: Flood plains
Down-slope shape: Linear
Across-slope shape: Linear
Ecological site: Draft Subirrigated (Sb) RRU 46-N 13-19" p.z. (R046XN256MT)
Hydric soil rating: No

Ryell

Percent of map unit: 3 percent
Landform: Flood plains
Down-slope shape: Linear
Across-slope shape: Linear
Ecological site: Silty (Si) 10-14" p.z. (R052XN161MT)
Hydric soil rating: No

Tetonview

Percent of map unit: 3 percent
Landform: Flood plains
Down-slope shape: Linear
Across-slope shape: Linear
Ecological site: Draft Subirrigated (Sb) RRU 46-N 13-19" p.z. (R046XN256MT)
Hydric soil rating: Yes

Rivra

Percent of map unit: 2 percent
Landform: Flood plains
Down-slope shape: Linear
Across-slope shape: Linear
Ecological site: Shallow to Gravel (SwGr) 10-14" p.z. (R052XN176MT)
Hydric soil rating: No

Birchfield

Percent of map unit: 2 percent
Landform: Flood plains
Down-slope shape: Linear
Across-slope shape: Linear
Ecological site: Draft Wet Meadow (WM) RRU 46-N 15-19" p.z. (R046XN262MT)
Hydric soil rating: Yes

Soil Information for All Uses

Soil Reports

The Soil Reports section includes various formatted tabular and narrative reports (tables) containing data for each selected soil map unit and each component of each unit. No aggregation of data has occurred as is done in reports in the Soil Properties and Qualities and Suitabilities and Limitations sections.

The reports contain soil interpretive information as well as basic soil properties and qualities. A description of each report (table) is included.

Land Classifications

This folder contains a collection of tabular reports that present a variety of soil groupings. The reports (tables) include all selected map units and components for each map unit. Land classifications are specified land use and management groupings that are assigned to soil areas because combinations of soil have similar behavior for specified practices. Most are based on soil properties and other factors that directly influence the specific use of the soil. Example classifications include ecological site classification, farmland classification, irrigated and nonirrigated land capability classification, and hydric rating.

Prime and other Important Farmlands

This table lists the map units in the survey area that are considered important farmlands. Important farmlands consist of prime farmland, unique farmland, and farmland of statewide or local importance. This list does not constitute a recommendation for a particular land use.

In an effort to identify the extent and location of important farmlands, the Natural Resources Conservation Service, in cooperation with other interested Federal, State, and local government organizations, has inventoried land that can be used for the production of the Nation's food supply.

Prime farmland is of major importance in meeting the Nation's short- and long-range needs for food and fiber. Because the supply of high-quality farmland is limited, the U.S. Department of Agriculture recognizes that responsible levels of government, as well as individuals, should encourage and facilitate the wise use of our Nation's prime farmland.

Prime farmland, as defined by the U.S. Department of Agriculture, is land that has the best combination of physical and chemical characteristics for producing food, feed, forage, fiber, and oilseed crops and is available for these uses. It could be cultivated land, pastureland, forestland, or other land, but it is not urban or built-up land or water areas. The soil quality, growing season, and moisture supply are those needed for the soil to economically produce sustained high yields of crops when proper management, including water management, and acceptable farming methods are applied. In general, prime farmland has an adequate and dependable supply of moisture from precipitation or irrigation, a favorable temperature and growing season, acceptable acidity or alkalinity, an acceptable salt and sodium content, and few or no rocks. The water supply is dependable and of adequate quality. Prime farmland is permeable to water and air. It is not excessively erodible or saturated with water for long periods, and it either is not frequently flooded during the growing season or is protected from flooding. Slope ranges mainly from 0 to 6 percent. More detailed information about the criteria for prime farmland is available at the local office of the Natural Resources Conservation Service.

For some of the soils identified in the table as prime farmland, measures that overcome a hazard or limitation, such as flooding, wetness, and droughtiness, are needed. Onsite evaluation is needed to determine whether or not the hazard or limitation has been overcome by corrective measures.

A recent trend in land use in some areas has been the loss of some prime farmland to industrial and urban uses. The loss of prime farmland to other uses puts pressure on marginal lands, which generally are more erodible, droughty, and less productive and cannot be easily cultivated.

Unique farmland is land other than prime farmland that is used for the production of specific high-value food and fiber crops, such as citrus, tree nuts, olives, cranberries, and other fruits and vegetables. It has the special combination of soil quality, growing season, moisture supply, temperature, humidity, air drainage, elevation, and aspect needed for the soil to economically produce sustainable high yields of these crops when properly managed. The water supply is dependable and of adequate quality. Nearness to markets is an additional consideration. Unique farmland is not based on national criteria. It commonly is in areas where there is a special microclimate, such as the wine country in California.

In some areas, land that does not meet the criteria for prime or unique farmland is considered to be *farmland of statewide importance* for the production of food, feed, fiber, forage, and oilseed crops. The criteria for defining and delineating farmland of statewide importance are determined by the appropriate State agencies. Generally, this land includes areas of soils that nearly meet the requirements for prime farmland and that economically produce high yields of crops when treated and managed according to acceptable farming methods. Some areas may produce as high a yield as prime farmland if conditions are favorable. Farmland of statewide importance may include tracts of land that have been designated for agriculture by State law.

In some areas that are not identified as having national or statewide importance, land is considered to be *farmland of local importance* for the production of food, feed, fiber, forage, and oilseed crops. This farmland is identified by the appropriate local agencies. Farmland of local importance may include tracts of land that have been designated for agriculture by local ordinance.

Report—Prime and other Important Farmlands

Prime and other Important Farmlands–Choteau-Conrad Area; Parts of Teton and Pondera Counties, Montana		
Map Symbol	**Map Unit Name**	**Farmland Classification**
40C	Kobase silty clay loam, 4 to 8 percent slopes	Farmland of statewide importance
114A	Gerdrum-Absher clay loams, 0 to 2 percent slopes	Not prime farmland
169C	Bascovy-Neldore complex, 2 to 8 percent slopes	Not prime farmland
540B	Marvan silty clay, wet, 0 to 4 percent slopes	Not prime farmland

Soil Physical Properties

This folder contains a collection of tabular reports that present soil physical properties. The reports (tables) include all selected map units and components for each map unit. Soil physical properties are measured or inferred from direct observations in the field or laboratory. Examples of soil physical properties include percent clay, organic matter, saturated hydraulic conductivity, available water capacity, and bulk density.

Engineering Properties

This table gives the engineering classifications and the range of engineering properties for the layers of each soil in the survey area.

Hydrologic soil group is a group of soils having similar runoff potential under similar storm and cover conditions. The criteria for determining Hydrologic soil group is found in the National Engineering Handbook, Chapter 7 issued May 2007(http://directives.sc.egov.usda.gov/OpenNonWebContent.aspx?content=17757.wba). Listing HSGs by soil map unit component and not by soil series is a new concept for the engineers. Past engineering references contained lists of HSGs by soil series. Soil series are continually being defined and redefined, and the list of soil series names changes so frequently as to make the task of maintaining a single national list virtually impossible. Therefore, the criteria is now used to calculate the HSG using the component soil properties and no such national series lists will be maintained. All such references are obsolete and their use should be discontinued. Soil properties that influence runoff potential are those that influence the minimum rate of infiltration for a bare soil after prolonged wetting and when not frozen. These properties are depth to a seasonal high water table, saturated hydraulic conductivity after prolonged wetting, and depth to a layer with a very slow water transmission rate. Changes in soil properties caused by land management or climate changes also cause the hydrologic soil group to change. The influence of ground cover is treated independently. There are four hydrologic soil groups, A, B, C, and D, and three dual groups, A/D, B/D, and C/D. In the dual groups, the first letter is for drained areas and the second letter is for undrained areas.

The four hydrologic soil groups are described in the following paragraphs:

Group A. Soils having a high infiltration rate (low runoff potential) when thoroughly wet. These consist mainly of deep, well drained to excessively drained sands or gravelly sands. These soils have a high rate of water transmission.

Group B. Soils having a moderate infiltration rate when thoroughly wet. These consist chiefly of moderately deep or deep, moderately well drained or well drained

soils that have moderately fine texture to moderately coarse texture. These soils have a moderate rate of water transmission.

Group C. Soils having a slow infiltration rate when thoroughly wet. These consist chiefly of soils having a layer that impedes the downward movement of water or soils of moderately fine texture or fine texture. These soils have a slow rate of water transmission.

Group D. Soils having a very slow infiltration rate (high runoff potential) when thoroughly wet. These consist chiefly of clays that have a high shrink-swell potential, soils that have a high water table, soils that have a claypan or clay layer at or near the surface, and soils that are shallow over nearly impervious material. These soils have a very slow rate of water transmission.

Depth to the upper and lower boundaries of each layer is indicated.

Texture is given in the standard terms used by the U.S. Department of Agriculture. These terms are defined according to percentages of sand, silt, and clay in the fraction of the soil that is less than 2 millimeters in diameter. "Loam," for example, is soil that is 7 to 27 percent clay, 28 to 50 percent silt, and less than 52 percent sand. If the content of particles coarser than sand is 15 percent or more, an appropriate modifier is added, for example, "gravelly."

Classification of the soils is determined according to the Unified soil classification system (ASTM, 2005) and the system adopted by the American Association of State Highway and Transportation Officials (AASHTO, 2004).

The Unified system classifies soils according to properties that affect their use as construction material. Soils are classified according to particle-size distribution of the fraction less than 3 inches in diameter and according to plasticity index, liquid limit, and organic matter content. Sandy and gravelly soils are identified as GW, GP, GM, GC, SW, SP, SM, and SC; silty and clayey soils as ML, CL, OL, MH, CH, and OH; and highly organic soils as PT. Soils exhibiting engineering properties of two groups can have a dual classification, for example, CL-ML.

The AASHTO system classifies soils according to those properties that affect roadway construction and maintenance. In this system, the fraction of a mineral soil that is less than 3 inches in diameter is classified in one of seven groups from A-1 through A-7 on the basis of particle-size distribution, liquid limit, and plasticity index. Soils in group A-1 are coarse grained and low in content of fines (silt and clay). At the other extreme, soils in group A-7 are fine grained. Highly organic soils are classified in group A-8 on the basis of visual inspection.

If laboratory data are available, the A-1, A-2, and A-7 groups are further classified as A-1-a, A-1-b, A-2-4, A-2-5, A-2-6, A-2-7, A-7-5, or A-7-6. As an additional refinement, the suitability of a soil as subgrade material can be indicated by a group index number. Group index numbers range from 0 for the best subgrade material to 20 or higher for the poorest.

Percentage of rock fragments larger than 10 inches in diameter and 3 to 10 inches in diameter are indicated as a percentage of the total soil on a dry-weight basis. The percentages are estimates determined mainly by converting volume percentage in the field to weight percentage. Three values are provided to identify the expected Low (L), Representative Value (R), and High (H).

Percentage (of soil particles) passing designated sieves is the percentage of the soil fraction less than 3 inches in diameter based on an ovendry weight. The sieves, numbers 4, 10, 40, and 200 (USA Standard Series), have openings of 4.76, 2.00, 0.420, and 0.074 millimeters, respectively. Estimates are based on laboratory tests

of soils sampled in the survey area and in nearby areas and on estimates made in the field. Three values are provided to identify the expected Low (L), Representative Value (R), and High (H).

Liquid limit and *plasticity index* (Atterberg limits) indicate the plasticity characteristics of a soil. The estimates are based on test data from the survey area or from nearby areas and on field examination. Three values are provided to identify the expected Low (L), Representative Value (R), and High (H).

References:

American Association of State Highway and Transportation Officials (AASHTO). 2004. Standard specifications for transportation materials and methods of sampling and testing. 24th edition.

American Society for Testing and Materials (ASTM). 2005. Standard classification of soils for engineering purposes. ASTM Standard D2487-00.

Absence of an entry indicates that the data were not estimated. The asterisk '*' denotes the representative texture; other possible textures follow the dash. The criteria for determining the hydrologic soil group for individual soil components is found in the National Engineering Handbook, Chapter 7 issued May 2007(http://directives.sc.egov.usda.gov/OpenNonWebContent.aspx?content=17757.wba). Three values are provided to identify the expected Low (L), Representative Value (R), and High (H).

Engineering Properties–Choteau-Conrad Area; Parts of Teton and Pondera Counties, Montana														
Map unit symbol and soil name	Pct. of map unit	Hydrologic group	Depth	USDA texture	Classification		Pct Fragments		Percentage passing sieve number—				Liquid limit	Plasticity index
					Unified	AASHTO	>10 inches	3-10 inches	4	10	40	200		
			In				*L-R-H*	*L-R-H*	*L-R-H*	*L-R-H*	*L-R-H*	*L-R-H*	*L-R-H*	*L-R-H*
39B—Ethridge silty clay loam, 0 to 4 percent slopes														
Ethridge	85	C	0-6	Silty clay loam	CL	A-6, A-7	0- 0- 0	0- 0- 0	100-100-100	95-98-100	90-95-100	85-90-95	25-35-45	10-15-20
			6-19	Silty clay, silty clay loam, clay	CL	A-7	0- 0- 0	0- 0- 0	100-100-100	95-98-100	95-98-100	90-93-95	40-45-50	20-25-30
			19-48	Silty clay loam	—	—	0- 0- 0	0- 0- 0	100-100-100	95-98-100	90-95-100	85-90-95	30-40-50	10-18-25
			48-60	Silty clay loam, clay loam, silt loam	CL	A-6, A-7	0- 0- 0	0- 0- 0	100-100-100	95-98-100	90-95-100	85-90-95	30-40-50	10-18-25

Engineering Properties–Choteau-Conrad Area; Parts of Teton and Pondera Counties, Montana														
Map unit symbol and soil name	**Pct. of map unit**	**Hydrologic group**	**Depth**	**USDA texture**	**Classification**		**Pct Fragments**		**Percentage passing sieve number—**				**Liquid limit**	**Plasticity index**
					Unified	**AASHTO**	**>10 inches**	**3-10 inches**	**4**	**10**	**40**	**200**		
			In				*L-R-H*	*L-R-H*	*L-R-H*	*L-R-H*	*L-R-H*	*L-R-H*	*L-R-H*	*L-R-H*
150B—Marias-Linnet silty clays, 0 to 4 percent slopes														
Marias	55	D	0-5	Silty clay	CH, CL	A-7	0- 0- 0	0- 0- 0	100-100-100	100-100-100	95-98-100	90-93-95	40-50-60	20-30-40
			5-11	Clay, silty clay	CH, CL	A-7	0- 0- 0	0- 0- 0	100-100-100	100-100-100	90-95-100	75-85-95	40-55-70	25-38-50
			11-29	Clay, silty clay	CH, CL	A-7	0- 0- 0	0- 0- 0	100-100-100	100-100-100	90-95-100	75-85-95	40-55-70	25-38-50
			29-60	Clay, silty clay	CH, CL	A-7	0- 0- 0	0- 0- 0	100-100-100	100-100-100	90-95-100	75-85-95	40-55-70	25-38-50
Linnet	35	C	0-5	Silty clay	CL	A-7	0- 0- 0	0- 0- 0	90-95-100	85-93-100	80-90-100	75-85-95	40-45-50	15-20-25
			5-13	Silty clay, clay	CH, CL	A-7	0- 0- 0	0- 0- 0	90-95-100	85-93-100	75-88-100	60-75-90	45-55-65	25-35-45
			13-48	Silty clay, clay, silty clay loam	CH, CL	A-6, A-7	0- 0- 0	0- 3- 5	85-93-100	80-90-100	70-85-100	55-73-90	35-45-55	15-25-35
			48-60	Silty clay, clay, silty clay loam	CH, CL	A-6, A-7	0- 0- 0	0- 3- 5	85-93-100	80-90-100	70-85-100	55-73-90	35-45-55	15-25-35

Engineering Properties–Choteau-Conrad Area; Parts of Teton and Pondera Counties, Montana														
Map unit symbol and soil name	Pct. of map unit	Hydrologic group	Depth	USDA texture	Classification		Pct Fragments		Percentage passing sieve number—				Liquid limit	Plasticity index
					Unified	AASHTO	>10 inches	3-10 inches	4	10	40	200		
			In				*L-R-H*	*L-R-H*	*L-R-H*	*L-R-H*	*L-R-H*	*L-R-H*	*L-R-H*	*L-R-H*
164B—Scobey-Kevin clay loams, 0 to 4 percent slopes														
Scobey	50	C	0-6	Clay loam	CL	A-6	0- 0- 0	0- 3- 7	82-89-100	81-88-100	74-84-99	54-64-79	40-40-50	20-20-25
			6-15	Clay, clay loam	CH	A-7-6	0- 0- 0	0- 3- 6	82-89-100	81-89-100	74-85-99	56-68-82	50-50-60	25-30-35
			15-29	Clay loam	CH	A-7-6	0- 0- 0	0- 3- 6	83-90-100	82-89-100	75-85-100	55-66-81	40-50-50	20-25-30
			29-43	Clay loam	CH	A-7-6	0- 0- 0	0- 3- 6	83-90-100	82-89-100	75-86-100	55-66-81	40-50-50	20-25-30
			43-61	Clay loam	CH	A-7-6	0- 0- 0	0- 3- 6	84-90-100	83-90-100	76-86-100	55-66-80	40-50-50	20-25-30
			61-79	Clay loam	CH	A-7-6	0- 0- 0	0- 3- 6	84-90-100	83-90-100	76-86-100	55-66-80	40-50-50	20-25-30
Kevin	35	C	0-6	Clay loam	CL	A-6	0- 0- 0	0- 3- 7	82-85-100	81-85-100	74-81-100	54-61-79	40-40-50	20-20-25
			6-9	Clay loam, clay	CH	A-7-6	0- 0- 0	0- 3- 6	82-89-100	81-89-100	75-85-100	56-67-82	50-50-60	25-30-30
			9-23	Clay loam	CL	A-6	0- 0- 0	0- 3- 6	83-90-100	82-89-100	75-85-99	54-64-78	40-40-50	15-20-25
			23-41	Clay loam	CL	A-6	0- 0- 0	0- 3- 6	83-90-100	82-89-100	75-85-99	54-64-78	40-40-50	15-20-25
			41-58	Clay loam	CL	A-6	0- 0- 0	0- 3- 6	84-90-100	83-90-100	76-86-99	54-64-78	40-40-50	20-20-25
			58-79	Clay loam	CL	A-6	0- 0- 0	0- 3- 6	84-90-100	83-90-100	76-86-99	54-64-78	40-40-50	20-25-25

Engineering Properties–Choteau-Conrad Area; Parts of Teton and Pondera Counties, Montana														
Map unit symbol and soil name	Pct. of map unit	Hydrologic group	Depth	USDA texture	Classification		Pct Fragments		Percentage passing sieve number—				Liquid limit	Plasticity index
					Unified	AASHTO	>10 inches	3-10 inches	4	10	40	200		
			In				*L-R-H*	*L-R-H*	*L-R-H*	*L-R-H*	*L-R-H*	*L-R-H*	*L-R-H*	*L-R-H*
169C—Bascovy-Neldore complex, 2 to 8 percent slopes														
Bascovy	50	D	0-5	Silty clay	CH, CL	A-7	0- 0- 0	0- 0- 0	90-95-100	75-88-100	70-83-95	60-78-95	40-50-60	20-28-35
			5-11	Clay, silty clay	CH	A-7	0- 0- 0	0- 0- 0	90-95-100	75-88-100	70-83-95	60-78-95	50-60-70	25-35-45
			11-25	Clay, silty clay	CH	A-7	0- 0- 0	0- 0- 0	90-95-100	75-88-100	70-83-95	60-78-95	50-60-70	25-35-45
			25-60	Unweathered bedrock	—	—	—	—	—	—	—	—	—	—
Neldore	35	D	0-4	Clay	CH, CL	A-7	0- 0- 0	0- 5- 10	95-98-100	90-95-100	75-88-100	70-83-95	40-48-55	20-25-30
			4-10	Clay, silty clay	CH, CL	A-7	0- 0- 0	0- 0- 0	90-95-100	85-93-100	70-83-95	65-78-90	40-50-60	20-30-40
			10-18	Clay, silty clay	CH, CL	A-7	0- 0- 0	0- 3- 5	85-93-100	80-90-100	65-80-95	60-75-90	40-50-60	20-30-40
			18-60	Unweathered bedrock	—	—	—	—	—	—	—	—	—	—

Engineering Properties–Choteau-Conrad Area; Parts of Teton and Pondera Counties, Montana														
Map unit symbol and soil name	Pct. of map unit	Hydrologic group	Depth	USDA texture	Classification		Pct Fragments		Percentage passing sieve number—				Liquid limit	Plasticity index
					Unified	AASHTO	>10 inches	3-10 inches	4	10	40	200		
			In				*L-R-H*	*L-R-H*	*L-R-H*	*L-R-H*	*L-R-H*	*L-R-H*	*L-R-H*	*L-R-H*
286F—Neldore-Bascovy-Rock outcrop complex, 25 to 60 percent slopes														
Neldore	45	D	0-4	Clay	CH, CL	A-7	0- 0- 0	0- 5- 10	95-98-100	90-95-100	75-88-100	70-83-95	40-48-55	20-25-30
			4-10	Clay, silty clay	CH, CL	A-7	0- 0- 0	0- 0- 0	90-95-100	85-93-100	70-83-95	65-78-90	40-50-60	20-30-40
			10-18	Clay, silty clay	CH, CL	A-7	0- 0- 0	0- 3- 5	85-93-100	80-90-100	65-80-95	60-75-90	40-50-60	20-30-40
			18-60	Unweathered bedrock	—	—	—	—	—	—	—	—	—	—
Bascovy	20	D	0-5	Silty clay	CH, CL	A-7	0- 0- 0	0- 0- 0	90-95-100	75-88-100	70-83-95	60-78-95	40-50-60	20-28-35
			5-11	Clay, silty clay	CH	A-7	0- 0- 0	0- 0- 0	90-95-100	75-88-100	70-83-95	60-78-95	50-60-70	25-35-45
			11-25	Clay, silty clay	CH	A-7	0- 0- 0	0- 0- 0	90-95-100	75-88-100	70-83-95	60-78-95	50-60-70	25-35-45
			25-60	Unweathered bedrock	—	—	—	—	—	—	—	—	—	—

Engineering Properties–Choteau-Conrad Area; Parts of Teton and Pondera Counties, Montana														
Map unit symbol and soil name	Pct. of map unit	Hydrologic group	Depth	USDA texture	Classification		Pct Fragments		Percentage passing sieve number—				Liquid limit	Plasticity index
					Unified	AASHTO	>10 inches	3-10 inches	4	10	40	200		
			In				*L-R-H*	*L-R-H*	*L-R-H*	*L-R-H*	*L-R-H*	*L-R-H*	*L-R-H*	*L-R-H*
400—Havre-Fairway loams, 0 to 4 percent slopes, rarely flooded														
Havre	45	B	0-8	Loam	CL-ML	A-4	0- 0- 0	0- 0- 0	100-100 -100	100-100 -100	80-88-95	60-75-90	20-25 -30	5-8 -10
			8-20	Stratified fine sandy loam to clay loam	—	—	0- 0- 0	0- 0- 0	100-100 -100	100-100 -100	80-88-95	60-70-80	20-28 -35	5-10-15
			20-60	Stratified fine sandy loam to clay loam	CL, CL-ML	A-4, A-6	0- 0- 0	0- 0- 0	100-100 -100	100-100 -100	80-88-95	60-70-80	20-28 -35	5-10-15
Fairway	40	B	0-9	Loam	CL-ML	A-4	0- 0- 0	0- 0- 0	100-100 -100	100-100 -100	90-95-100	70-80-90	20-25 -30	5-8 -10
			9-15	Silt loam, loam	CL, CL-ML	A-4, A-6	0- 0- 0	0- 0- 0	100-100 -100	100-100 -100	90-95-100	70-80-90	20-28 -35	5-10-15
			15-48	Silty clay loam, loam	CL, CL-ML	A-4, A-6	0- 0- 0	0- 0- 0	100-100 -100	100-100 -100	95-98-100	85-90-95	20-30 -40	5-10-15
			48-60	Sand, gravelly loamy sand, very gravelly sand	GP-GM, SM, SP, SP-SM	A-1, A-2	0- 0- 0	0- 5- 10	40-70-100	30-65-100	20-40-60	0- 8- 15	0-17 -23	NP

References

American Association of State Highway and Transportation Officials (AASHTO). 2004. Standard specifications for transportation materials and methods of sampling and testing. 24th edition.

American Society for Testing and Materials (ASTM). 2005. Standard classification of soils for engineering purposes. ASTM Standard D2487-00.

Cowardin, L.M., V. Carter, F.C. Golet, and E.T. LaRoe. 1979. Classification of wetlands and deep-water habitats of the United States. U.S. Fish and Wildlife Service FWS/OBS-79/31.

Federal Register. July 13, 1994. Changes in hydric soils of the United States.

Federal Register. September 18, 2002. Hydric soils of the United States.

Hurt, G.W., and L.M. Vasilas, editors. Version 6.0, 2006. Field indicators of hydric soils in the United States.

National Research Council. 1995. Wetlands: Characteristics and boundaries.

Soil Survey Division Staff. 1993. Soil survey manual. Soil Conservation Service. U.S. Department of Agriculture Handbook 18. http://www.nrcs.usda.gov/wps/portal/nrcs/detail/national/soils/?cid=nrcs142p2_054262

Soil Survey Staff. 1999. Soil taxonomy: A basic system of soil classification for making and interpreting soil surveys. 2nd edition. Natural Resources Conservation Service, U.S. Department of Agriculture Handbook 436. http://www.nrcs.usda.gov/wps/portal/nrcs/detail/national/soils/?cid=nrcs142p2_053577

Soil Survey Staff. 2010. Keys to soil taxonomy. 11th edition. U.S. Department of Agriculture, Natural Resources Conservation Service. http://www.nrcs.usda.gov/wps/portal/nrcs/detail/national/soils/?cid=nrcs142p2_053580

Tiner, R.W., Jr. 1985. Wetlands of Delaware. U.S. Fish and Wildlife Service and Delaware Department of Natural Resources and Environmental Control, Wetlands Section.

United States Army Corps of Engineers, Environmental Laboratory. 1987. Corps of Engineers wetlands delineation manual. Waterways Experiment Station Technical Report Y-87-1.

United States Department of Agriculture, Natural Resources Conservation Service. National forestry manual. http://www.nrcs.usda.gov/wps/portal/nrcs/detail/soils/home/?cid=nrcs142p2_053374

United States Department of Agriculture, Natural Resources Conservation Service. National range and pasture handbook. http://www.nrcs.usda.gov/wps/portal/nrcs/detail/national/landuse/rangepasture/?cid=stelprdb1043084

United States Department of Agriculture, Natural Resources Conservation Service. National soil survey handbook, title 430-VI. http://www.nrcs.usda.gov/wps/portal/nrcs/detail/soils/scientists/?cid=nrcs142p2_054242

United States Department of Agriculture, Natural Resources Conservation Service. 2006. Land resource regions and major land resource areas of the United States, the Caribbean, and the Pacific Basin. U.S. Department of Agriculture Handbook 296. http://www.nrcs.usda.gov/wps/portal/nrcs/detail/national/soils/?cid=nrcs142p2_053624

United States Department of Agriculture, Soil Conservation Service. 1961. Land capability classification. U.S. Department of Agriculture Handbook 210. http://www.nrcs.usda.gov/Internet/FSE_DOCUMENTS/nrcs142p2_052290.pdf