DEPARTMENT OF THE ARMY
CORPS OF ENGINEERS, JACKSONVILLE DISTRICT
10117 PRINCESS PALM AVENUE, SUITE 120
TAMPA, FLORIDA 33610

March 06, 2019

Regulatory Division
West Branch
Tampa Permits Section

PUBLIC NOTICE

Permit Application No. SAJ-2018-03441(SP-PTR)

TO WHOM IT MAY CONCERN: The Jacksonville District of the U.S. Army Corps of Engineers (Corps) has received an application for a Department of the Army permit pursuant to Section 404 of the Clean Water Act (33 U.S.C. §1344) and Section 10 of the Rivers and Harbors Act of 1899 (33 U.S.C. §403) as described below:

APPLICANT: St. Johns River Water Management District (SJRWMD)

WATERWAY AND LOCATION: The project would affect waters of the United States man-made waterways associated with Lake Apopka. The project site is located at various locations near Lust Road, Apopka, Fl.

Directions to the site are as follows: From SR 441 in Zell wood, travel south to Boy Scout Blvd and turn right. Go to the end of the road and turn left onto S. Binion Rd. Tum right on Lust Road and enter through the Wildlife Drive. There are 3 types of proposed work; levee improvements, construct a new pump station, berm repair and culvert installation. See attached figure for specific locations. Below are center coordinates for each location.

APPROXIMATE CENTRAL COORDINATES: Levee Improvements

Latitude 28.712557° Latitude 28.674237° Latitude 28.668843°
Longitude -81.624215° Longitude -81.591729° Longitude -81.583476°

APPROXIMATE CENTRAL COORDINATES: Pump Station

Latitude 28.698203°
Longitude -81.608073°

APPROXIMATE CENTRAL COORDINATES: Berm Improvement and Culvert

Latitude 28.783017°
Longitude -81.609181°

PROJECT PURPOSE:

Basic: Maintain and improve infrastructure at the Lake Apopka North Shore (LANS) to improve hydrologic management of various phases at the LANS and allow these areas to be operated more independently.

Overall: Improve the hydrologic management of various phases at the Lake Apopka North Shore (LANS). This will be accomplished by restoring the elevation of subsided internal levees and constructing a 50 cfs pump station to allow for better management of hydrologic conditions across the various phases at the LANS.

EXISTING CONDITIONS: Placement of fill material is necessary to restore approximately 1.5 miles of internal levees that serve as access for the Wildlife Drive and as boundaries for various phases at the LANS. The elevation across these muck levees varies due to subsidence, erosion and settling and the low spots are subject to overtopping during high water conditions, hydrologically connecting phases that are intended to be operated independently, further eroding the low areas in these levees and limiting the recreational use of the Wildlife Drive. Fill placement for the pump station will prevent erosion during operation and the plug will allow better hydrologic control over the various phases. The current infrastructure does not allow Phase 4 to be managed independently and the proposed modifications to the infrastructure will allow this phase to be isolated, such that other phases can be more finely managed for vegetation maintenance, fire, restoration, etc.

PROPOSED WORK: The applicant seeks authorization to impact 1.02 acres of existing surface waters in the form of ditches adjacent to the existing levees, converting 0.39 acre to upland and leaving 0.63 acre below the normal water level. The pump station and bay portion of the project include 0.04 acre of permanent impact to surface waters for the placement of riprap to manage erosion at the bottom of the ditches and these areas will remain surface water. Temporary impacts total 0.02 acre for a temporary cofferdam necessary for construction of the pump access platform and riprap. The culverted canal plug will impact 0.07 acre of the existing canal and approximately half of this area will remain below the normal water level.

AVOIDANCE AND MINIMIZATION INFORMATION – The applicant has provided the following information in support of efforts to avoid and/or minimize impacts to the aquatic environment:

“The purpose of the project is maintenance and improvement to infrastructure to facilitate hydrologic control and is water dependent so these impacts car not be avoided. Impacts have been minimized by reducing side slopes and locating fill in existing ditches to avoid impacts to wetland communities. Side slopes are typically 3:1 to provide stability and minimize erosion. Because these levees are part of the publicly accessible wildlife drive, a narrow band of 8: 1 slope will be on one side to provide a minimal shoulder for safety. Beyond the shoulder slopes will be 2: 1 to minimize the footprint of the fill. The riprap sections are the smallest size that will provide sufficient

protection from erosion and scour associated with operation of the pump. The plug was placed a distance from the pump to create a pump bay of sufficient size to protect the pump from cavitation or repeated short-term operation."

COMPENSATORY MITIGATION – The applicant has offered the following: Placement of fill material is necessary to restore approximately 1.5 miles of internal levees that serve as access for the Wildlife Drive and as boundaries for various phases at the LANS. The elevation across these muck levees varies due to subsidence, erosion and settling and the low spots are subject to overtopping during high water conditions, hydrologically connecting phases that are intended to be operated independently, further eroding the low areas in these levees and limiting the recreational use of the Wildlife Drive. TheCorps has reviewed the project purpose and is currently not requiring compensatory mitigation based on the restoring nature of managed areas. Our final determination relative to project impacts and the need for mitigation measures is subject to final review.

CULTURAL RESOURCES:

The Corps is not aware of any known historic properties within the permit area. By copy of this public notice, the Corps is providing information for review. Our final determination relative to historic resource impacts is subject to review by and coordination with the State Historic Preservation Officer and those federally recognized tribes with concerns in Florida and the Permit Area.

ENDANGERED SPECIES:

The Corps has made a preliminary determination that the proposed project may affect, but is not likely to adversely affect the Wood Stork, Eastern Indigo Snake, and the Everglades Snail Kite. The Corps will request the concurrence of U.S. Fish and Wildlife Service with this determination pursuant to Section 7 of the Endangered Species Act.

The eastern indigo snake, a federally threatened species, is wide-ranging and may be expected in a wide variety of habitats at low densities. Utilizing the *North Eastern Indigo Snake Programmatic Effect Determination Key* (updated August 13, 2013) yielded the following progression: A (Not Open Water) > B (Permit conditioned for *Standard Protection Measures*) > C (Refugia, Holes are not present). Based on the progression through the Key, consultation between the ACOE and the U.S. Fish and Wildlife Service is not required for a "may affect, but is not likely to adversely affect" determination based on the *Effect Determination Key for the Eastern Indigo Snake*. Adherence to the FWS *Standard Protection Measures for Eastern Indigo Snakes* during construction should minimize regulatory exposure from eastern indigo snakes.

The project site is located within the Core Foraging Area (CFA) of wood stork colonies in Orange County. Using the *Florida Programmatic Concurrence Key for the Wood Stork* (May 18, 2010), yielded the following progression: A (Impacts SFH >0.47 mile from colony) > B (Impact to SFH > 0.5 acre) > C (Impacts to SFH within CFA) > E

(Project provides SFH compensation – SFH will be restored once the project is completed.). Based on the progression through the Key, consultation between the ACOE and the U.S. Fish and Wildlife Service is not required for a "may affect, but is not likely to adversely affect" determination based on the *Programmatic Concurrence Key for the Wood Stork*. Less than 5 acres of wetland impacts are proposed on the project so a site-specific foraging prey base analysis is not required pursuant to the *Programmatic Concurrence Key.*

Evergaldes Snail Kite - Kite foraging habitat consists of relatively shallow wetland vegetation, either within extensive marsh systems, or in lake littoral zones. Kites nest in a variety of vegetation types, including both woody vegetation such as willows, cypress, pond apple, and even exotic invasive species such as melaleuca. Kites usually nest over open water. Snail kites have been rarely observed on the project site within the last 20 years according to the applicant, but no snail kite habitat will be affected by the proposed project.

The Corps has determined the proposal would have no effect on the following species:

Florida Scrub Jay – The Florida scrub-jay lives only in the scrub and scrubby flatwoods habitats of Florida. There is no essential habitat within or near the proposed project locations.

Skinks - Sand Skink and Blue-Tailed Mole Skink - Both sand skinks and blue-tailed mole skinks are endemic to (only occur on) the sandy ridges of central Florida. Both sand skinks and blue-tailed mole skinks typically occur in areas that contain a mosaic of open sandy patches interspersed with forbs, shrubs, and trees. Skinks occur in excessively drained, well-drained, and moderately well-drained sandy soils and typically at elevation of 82 feet or higher. None of these habitat requirements are present within the proposed project locations.

ESSENTIAL FISH HABITAT (EFH): This notice initiates consultation with the National Marine Fisheries Service on EFH as required by the Magnuson-Stevens Fishery Conservation and Management Act 1996. Our initial determination is that the proposed action would not have a substantial adverse impact on EFH or Federally managed fisheries in the proposed project areas. Our final determination relative to project impacts and the need for mitigation measures is subject to review by and coordination with the National Marine Fisheries Service.

NOTE: This public notice is being issued based on information furnished by the applicant. This information has not been verified or evaluated to ensure compliance with laws and regulation governing the regulatory program. The jurisdictional line [has/has not] been verified by Corps personnel.

AUTHORIZATION FROM OTHER AGENCIES: Water Quality Certification may be required from the Florida Department of Environmental Protection and/or one of the state Water Management Districts.

COMMENTS regarding the potential authorization of the work proposed should be submitted in writing to the attention of the District Engineer through the Tampa Permits Section, 10117 Princess Palm Avenue, Suite 120, Tampa, Florida 33610 within 21 days from the date of this notice.

The decision whether to issue or deny this permit application will be based on the information received from this public notice and the evaluation of the probable impact to the associated wetlands. This is based on an analysis of the applicant's avoidance and minimization efforts for the project, as well as the compensatory mitigation proposed.

QUESTIONS concerning this application should be directed to the project manager, Peter Romano, in writing at the Tampa Permits Section, 10117 Princess Palm Avenue, Suite 120, Tampa, Florida 33610 ; by electronic mail at peter.t.romano@usace.army.mil; or by telephone at (813)769-7072.

IMPACT ON NATURAL RESOURCES: Coordination with U.S. Fish and Wildlife Service, Environmental Protection Agency (EPA), the National Marine Fisheries Services, and other Federal, State, and local agencies, environmental groups, and concerned citizens generally yields pertinent environmental information that is instrumental in determining the impact the proposed action will have on the natural resources of the area.

EVALUATION: The decision whether to issue a permit will be based on an evaluation of the probable impact including cumulative impacts of the proposed activity on the public interest. That decision will reflect the national concern for both protection and utilization of important resources. The benefits, which reasonably may be expected to accrue from the proposal, must be balanced against its reasonably foreseeable detriments. All factors which may be relevant to the proposal will be considered including cumulative impacts thereof; among these are conservation, economics, esthetics, general environmental concerns, wetlands, historical properties, fish and wildlife values, flood hazards, floodplain values, land use, navigation, shoreline erosion and accretion, recreation, water supply and conservation, water quality, energy needs, safety, food, and fiber production, mineral needs, considerations of property ownership, and in general, the needs and welfare of the people. Evaluation of the impact of the activity on the public interest will also include application of the guidelines promulgated by the Administrator, EPA, under authority of Section 404(b) of the Clean Water Act or the criteria established under authority of Section 102(a) of the Marine Protection Research and Sanctuaries Act of 1972. A permit will be granted unless its issuance is found to be contrary to the public interest.

The US Army Corps of Engineers (Corps) is soliciting comments from the public; Federal, State, and local agencies and officials; Indian Tribes; and other Interested parties in order to consider and evaluate the impacts of this proposed activity. Any comments received will be considered by the Corps to determine whether to issue, modify, condition, or deny a permit for this proposal. To make this determination,

comments are used to assess impacts to endangered species, historic properties, water quality, general environmental effects, and the other public interest factors listed above. Comments are also used to determine the need for a public hearing and to determine the overall public interest of the proposed activity.

COASTAL ZONE MANAGEMENT CONSISTENCY: In Florida, the State approval constitutes compliance with the approved Coastal Zone Management Plan. In Puerto Rico, a Coastal Zone Management Consistency Concurrence is required from the Puerto Rico Planning Board. In the Virgin Islands, the Department of Planning and Natural Resources permit constitutes compliance with the Coastal Zone Management Plan.

REQUEST FOR PUBLIC HEARING: Any person may request a public hearing. The request must be submitted in writing to the District Engineer within the designated comment period of the notice and must state the specific reasons for requesting the public hearing.

Lake Apopka North Shore Levee

Aerial Location

Lake Apopka North Shore Levee

Project Locations

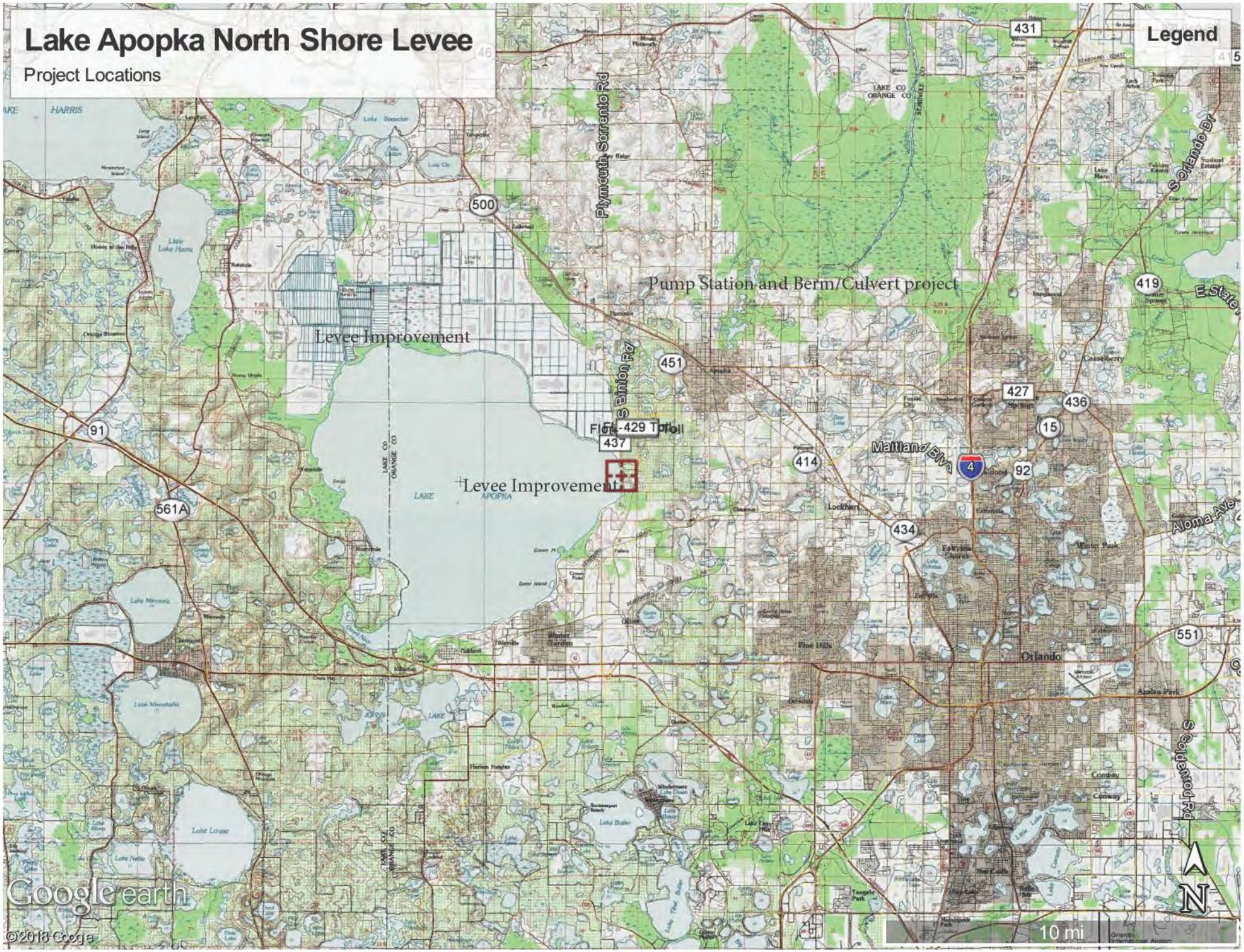

©2018 Google

Soil Map—Orange County, Florida
(Lake Apopka North Shore)

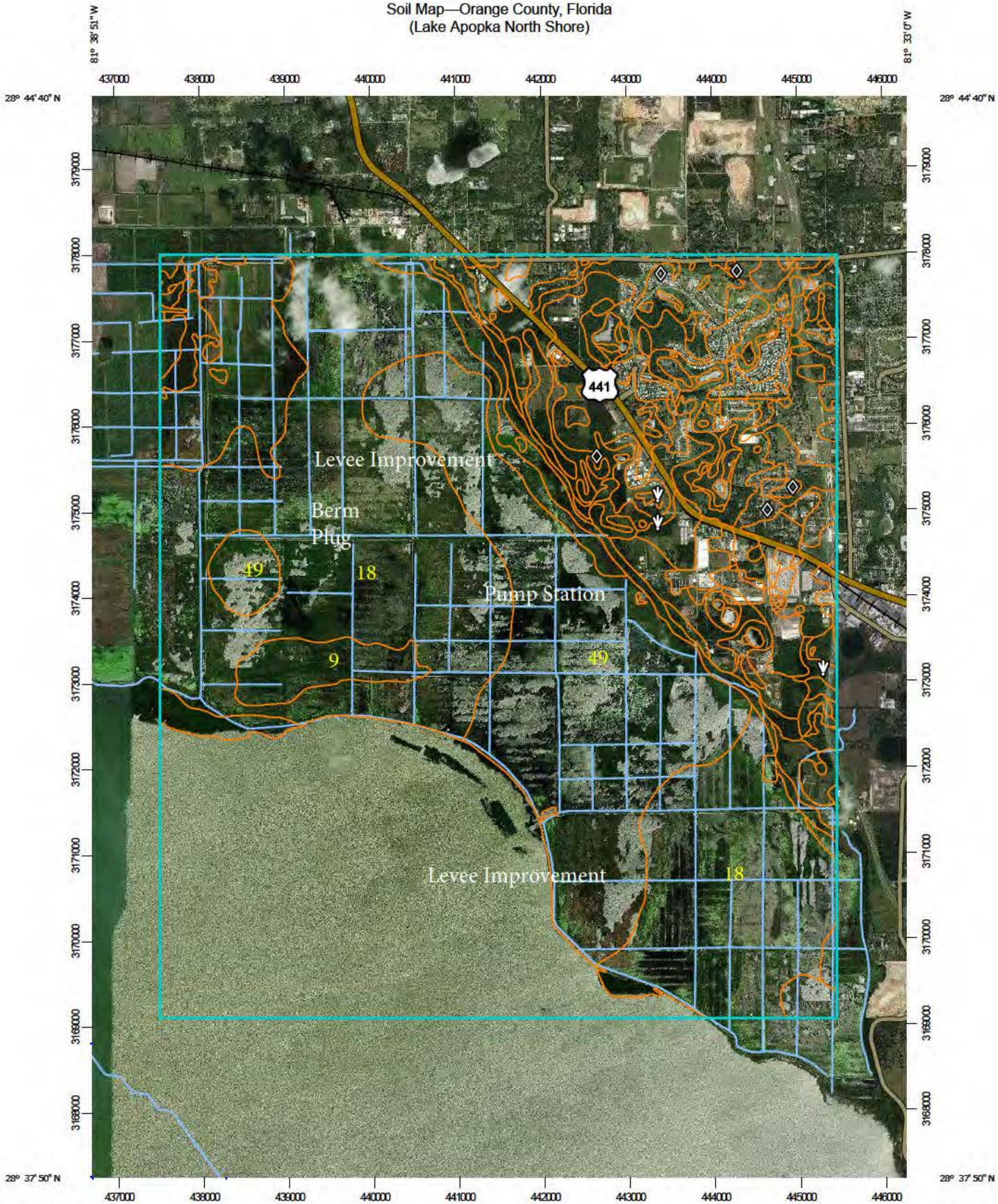

Map Scale: 1:61,500 if printed on A portrait (8.5" x 11") sheet.

Meters: 0 500 1000 2000 3000

Feet: 0 2500 5000 10000 15000

N

Map projection: Web Mercator Corner coordinates: WGS84 Edge tics: UTM Zone 17N WGS84

Map Unit Legend

Map Unit Symbol	Map Unit Name	Acres in AOI	Percent of AOI
1	Arents, nearly level	16.6	0.1%
2	Archbold fine sand, 0 to 5 percent slopes	25.0	0.1%
3	Basinger fine sand, frequently ponded, 0 to 1 percent slopes	107.0	0.6%
4	Candler fine sand, 0 to 5 percent slopes	196.2	1.1%
5	Candler fine sand, 5 to 12 percent slopes	235.3	1.3%
6	Candler-Apopka fine sands, 5 to 12 percent slopes	788.0	4.5%
7	Candler-Urban land complex, 0 to 5 percent slopes	28.3	0.2%
8	Candler-Urban land complex, 5 to 12 percent slopes	73.4	0.4%
9	Canova muck	1,015.0	5.8%
13	Felda fine sand, 0 to 2 percent slopes	22.3	0.1%
17	Floridana mucky fine sand, frequently ponded, 0 to 1 percent slopes	24.2	0.1%
18	Gator muck, frequently ponded, 0 to 1 percent slopes	4,940.9	28.2%
20	Immokalee fine sand	38.6	0.2%
23	Malabar fine sand	172.7	1.0%
25	Okeelanta muck	313.1	1.8%
32	Pinellas fine sand, 0 to 2 percent slopes	14.9	0.1%
33	Pits	52.9	0.3%
34	Pomello fine sand, 0 to 5 percent slopes	96.1	0.5%
38	St. Lucie fine sand, 0 to 5 percent slopes	102.8	0.6%
39	St. Lucie-Urban land complex, 0 to 5 percent slopes	30.6	0.2%
42	Sanibel muck	27.9	0.2%
44	Smyrna-Smyrna, wet, fine sand, 0 to 2 percent slopes	6.1	0.0%
46	Tavares fine sand, 0 to 5 percent slopes	624.7	3.6%

ST. JOHNS RIVER WATER MANAGEMENT DISTRICT
UPPER OCKLAWAHA RIVER BASIN/ LAKE APOPKA
NORTH SHORE INTERNAL LEVEE IMPROVEMENTS

ORANGE COUNTY, FLORIDA

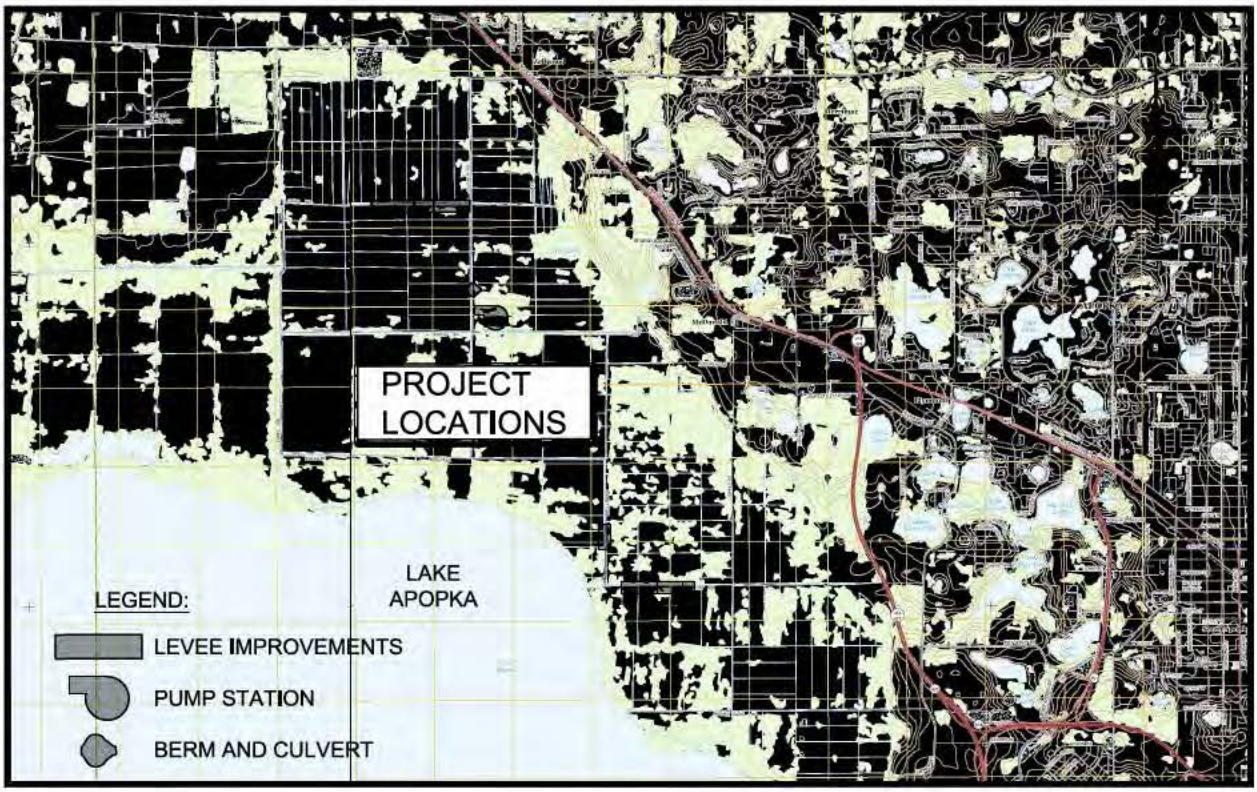

VICINITY MAP

NOT TO SCALE

SHEET INDEX

SHEET NO.	SHEET TITLE
1	COVER SHEET & VICINITY MAP
2	OVERALL SITE PLAN
3	CROSS SECTION 1 DETAIL AND FILL SUMMARY
4	CROSS SECTION 2 DETAIL AND FILL SUMMARY
5	PUMP STATION SITE LAYOUT
6	PUMP STATION PLAN
7	PLUG & CULVERT PLAN
8	SECTION A-A
9	SECTION B-B
10	EROSION AND SEDIMENT CONTROL
11	EROSION AND SEDIMENT CONTROL
12	EROSION AND SEDIMENT CONTROL

NOTE:
1. ALL ELEVATION SHOWN HERON ARE REFERENCE TO NAVD(88).

UPPER OCKLAWAHA RIVER BASIN/ LAKE APOPKA NORTH SHORE INTERNAL LEVEE IMPROVEMENTS ORANGE COUNTY, FLORIDA	**ST. JOHNS RIVER WATER MANAGEMENT DISTRICT** P.O. BOX 1429 PALATKA, FLORIDA	
COVER SHEET & VICINITY MAP	ROBERT J. NALEWAY P.E. # 53197 DATE: 11/02/2018	SHEET NUMBER: 1

U:\Projects\CADD\APOPKA\Internal Levee Improvmements 2018\PERMIT\cover.dwg

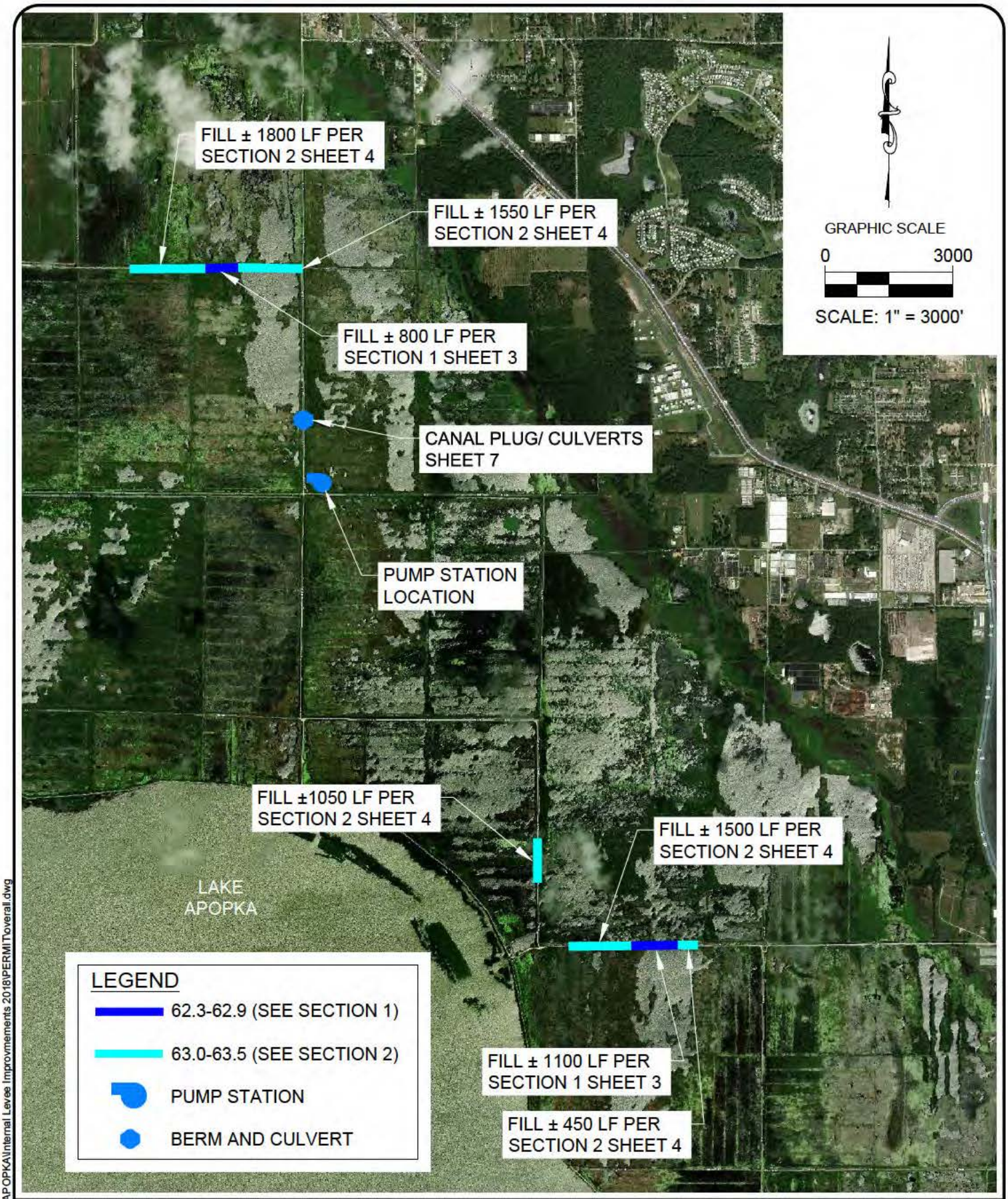

U:\Projects\CADD\APOPKA\Internal Levee Improvements 2018\PERMIT\overall.dwg

UPPER OCKLAWAHA RIVER BASIN/ LAKE APOPKA
NORTH SHORE INTERNAL LEVEE IMPROVEMENTS
ORANGE COUNTY, FLORIDA

ST. JOHNS RIVER WATER MANAGEMENT DISTRICT
P.O. BOX 1429 PALATKA, FLOR DA

OVERALL SITE PLAN

ROBERT J. NALEWAY P.E. # 53197 DATE: 11/02/2018

SHEET NUMBER: 2

U:\Projects\CADD\APOPKA\Internal Levee Improvmements 2018\PERMIT\overall.dwg

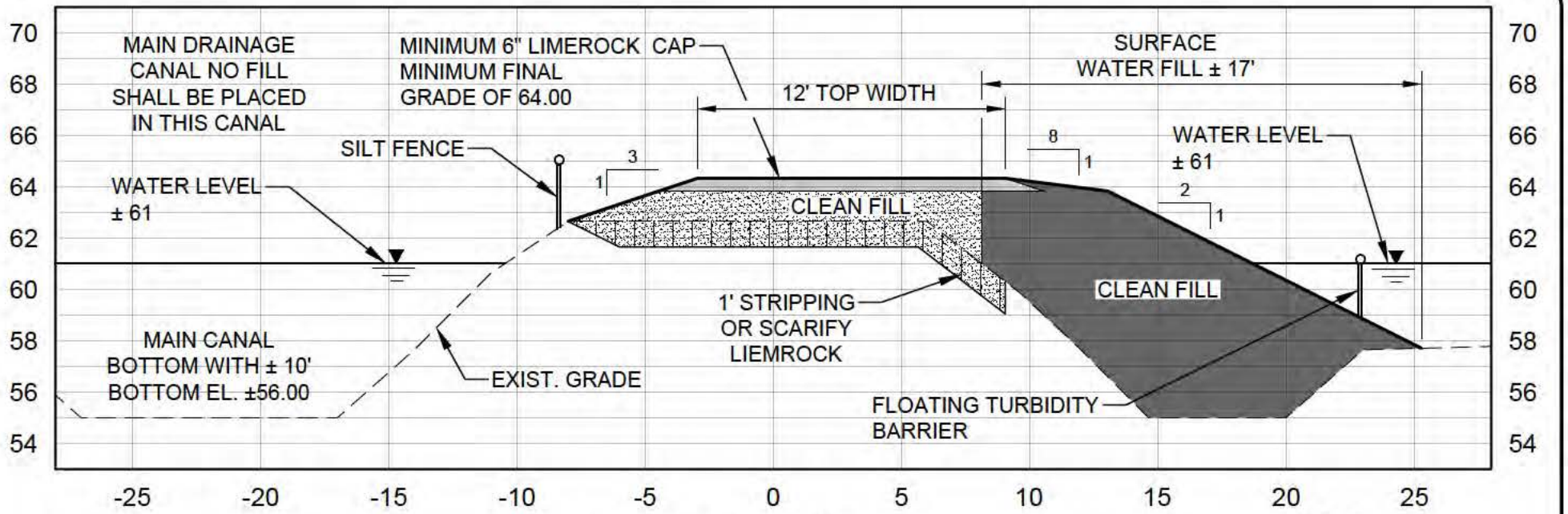

SECTION 1

(EXISTING ELEVATION 62.3 - 62.9)

SCALE: 1" = 6' HOR.

SCALE: 1" = 6' VERT.

LEGEND

- LIMEROCK CAP
- FILL IN UPLANDS
- FILL IN SURFACE WATERS
- 1' STRIPPING (IN NON-LIMEROCKED AREAS ONLY)

Section	Length	Average Existing Elevation	Area of fill in surface waters (square feet)	Volume of fill in surface waters (cubic yards)
Chase Road	800	62.6	14400	1067
Lust Road	1100	62.6	19800	1467
Total			**34200**	**2533**

UPPER OCKLAWAHA RIVER BASIN/ LAKE APOPKA
NORTH SHORE INTERNAL LEVEE IMPROVEMENTS
ORANGE COUNTY, FLORIDA

ST. JOHNS RIVER WATER MANAGEMENT DISTRICT
P.O. BOX 1429 PALATKA, FLOR DA

CROSS SECTION 1 DETAIL AND FILL SUMMARY

ROBERT J. NALEWAY P.E. # 53197 DATE: 11/02/2018

SHEET NUMBER: 3

U:\Projects\CADD\APOPKA\Internal Levee Improvmements 2018\PERMIT\overall.dwg

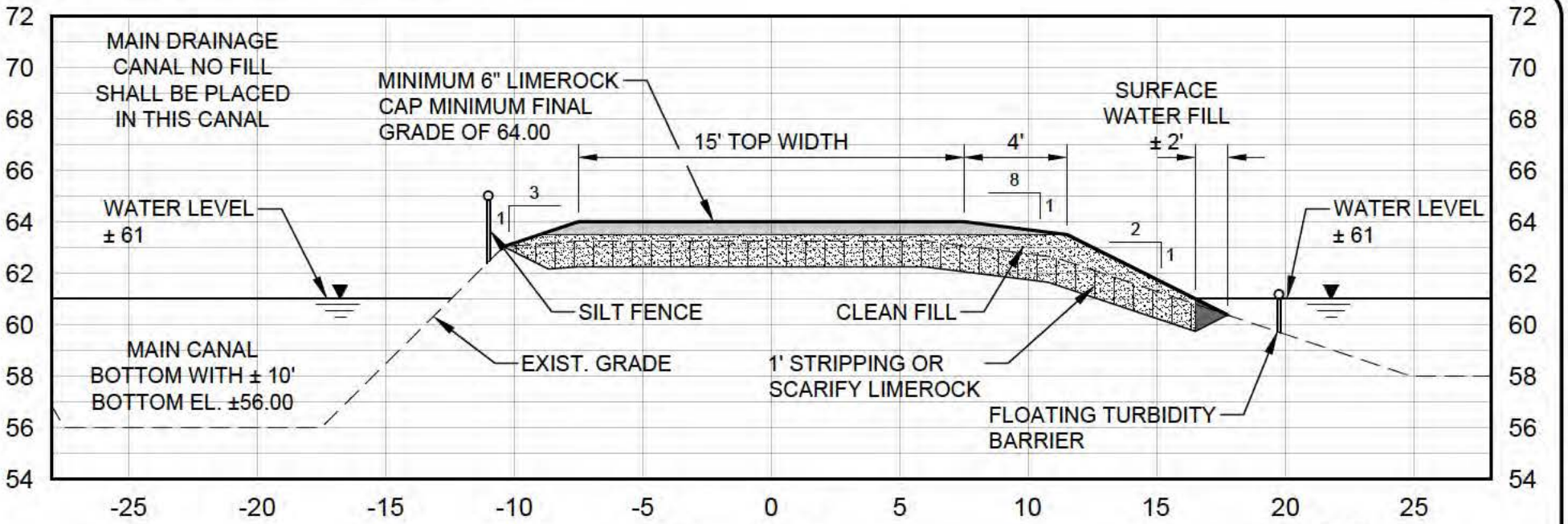

SECTION 2

(EXISTING ELEVATION 63.25)

SCALE: 1" = 6' HOR.

SCALE: 1" = 6' VERT.

LEGEND

- LIMEROCK CAP
- FILL IN UPLANDS
- FILL IN SURFACE WATERS
- 1' STRIPPING (IN NON-LIMEROCKED AREAS ONLY)

Section	Length	Average Existing Elevation	Area of fill in surface waters (square feet)	Volume of fill in surface waters (cubic yards)
Chase Road	3350	63.25	6700	372
Pole Road	650	63.25	1300	72
Lust Road	1100	63.25	2200	122
Total			**10200**	**567**

UPPER OCKLAWAHA RIVER BASIN/ LAKE APOPKA
NORTH SHORE INTERNAL LEVEE IMPROVEMENTS
ORANGE COUNTY, FLORIDA

ST. JOHNS RIVER WATER MANAGEMENT DISTRICT
P.O. BOX 1429 PALATKA, FLOR DA

CROSS SECTION 2 DETAIL AND FILL SUMMARY

ROBERT J. NALEWAY P.E. # 53197 DATE: 11/02/2018

SHEET NUMBER: 4

UPPER OCKLAWAHA RIVER BASIN/ LAKE APOPKA
NORTH SHORE INTERNAL LEVEE IMPROVEMENTS
ORANGE COUNTY, FLORIDA

ST. JOHNS RIVER
WATER MANAGEMENT DISTRICT
P.O. BOX 1429 PALATKA, FLOR DA

PUMP STATION SITE LAYOUT

ROBERT J. NALEWAY P.E. # 53197 DATE: 11/02/2018

SHEET NUMBER:
5

U:\Projects\CADD\APOPKA\Internal Levee Improvements 2018\PERMIT\pump station plan.dwg

U:\Projects\CADD\APOPKA\Internal Levee Improvmements 2018\PERMIT\pump station plan.dwg

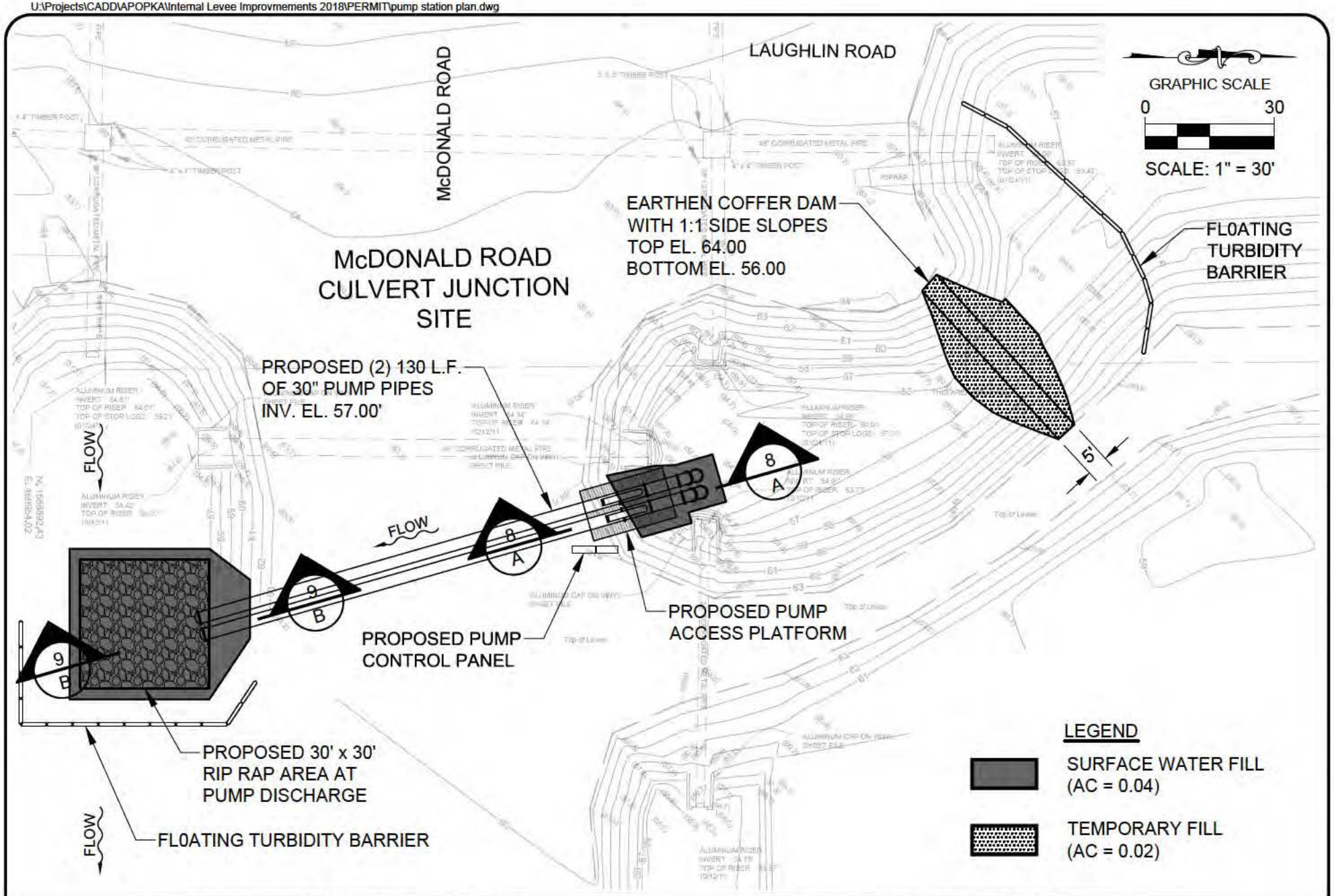

UPPER OCKLAWAHA RIVER BASIN/ LAKE APOPKA NORTH SHORE INTERNAL LEVEE IMPROVEMENTS ORANGE COUNTY, FLORIDA	**ST. JOHNS RIVER WATER MANAGEMENT DISTRICT** P.O. BOX 1429 PALATKA, FLOR DA
PUMP STATION PLAN	ROBERT J. NALEWAY P.E. # 53197 DATE: 11/02/2018
	SHEET NUMBER: 6

U:\Projects\CADD\APOPKA\Internal Levee Improvmements 2018\PERMIT\pump station plan.dwg

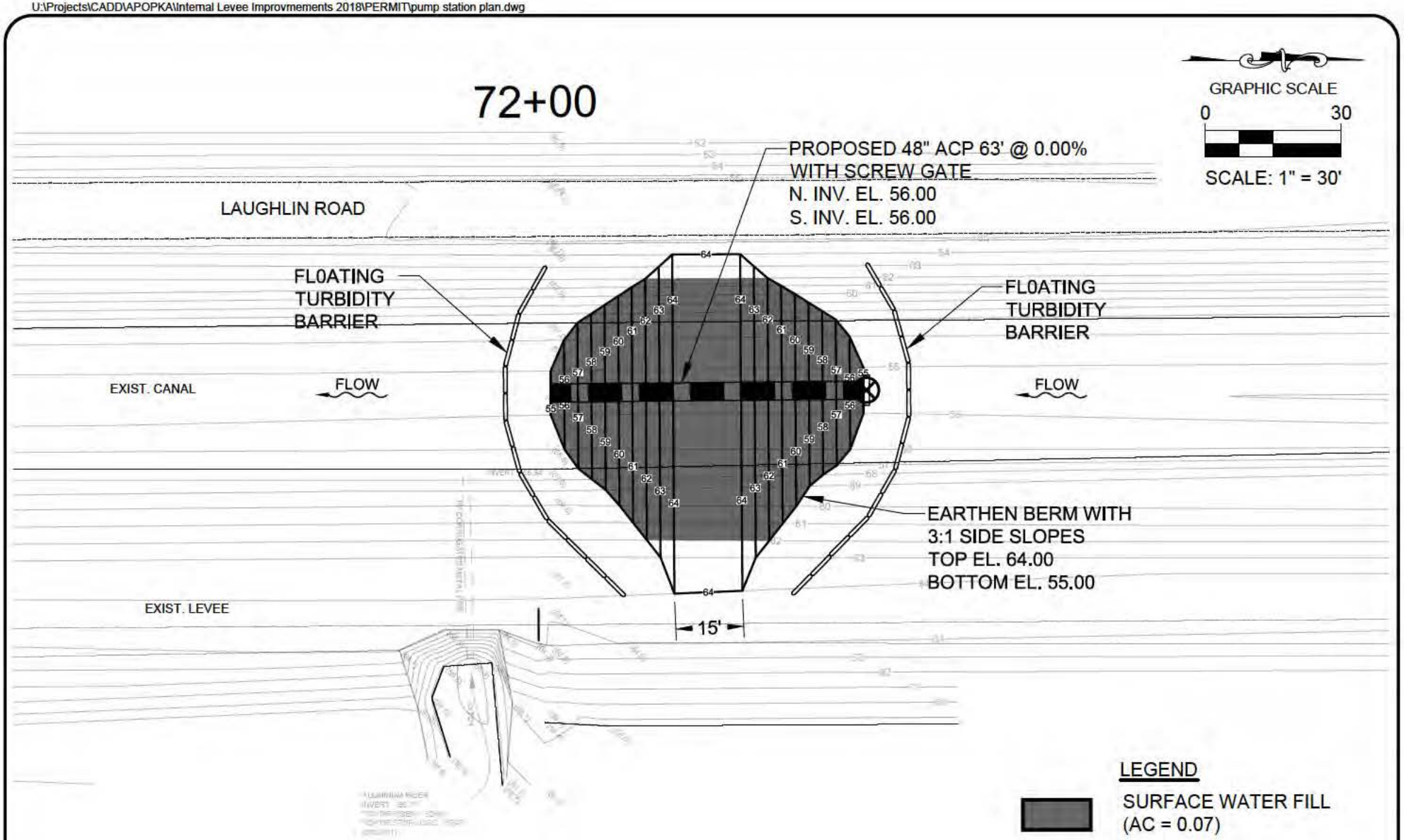

UPPER OCKLAWAHA RIVER BASIN/ LAKE APOPKA
NORTH SHORE INTERNAL LEVEE IMPROVEMENTS
ORANGE COUNTY, FLORIDA

PLUG & CULVERT PLAN

ST. JOHNS RIVER
WATER MANAGEMENT DISTRICT
P.O. BOX 1429 PALATKA, FLOR DA

ROBERT J. NALEWAY P.E. # 53197 DATE: 11/02/2018

SHEET NUMBER:
7

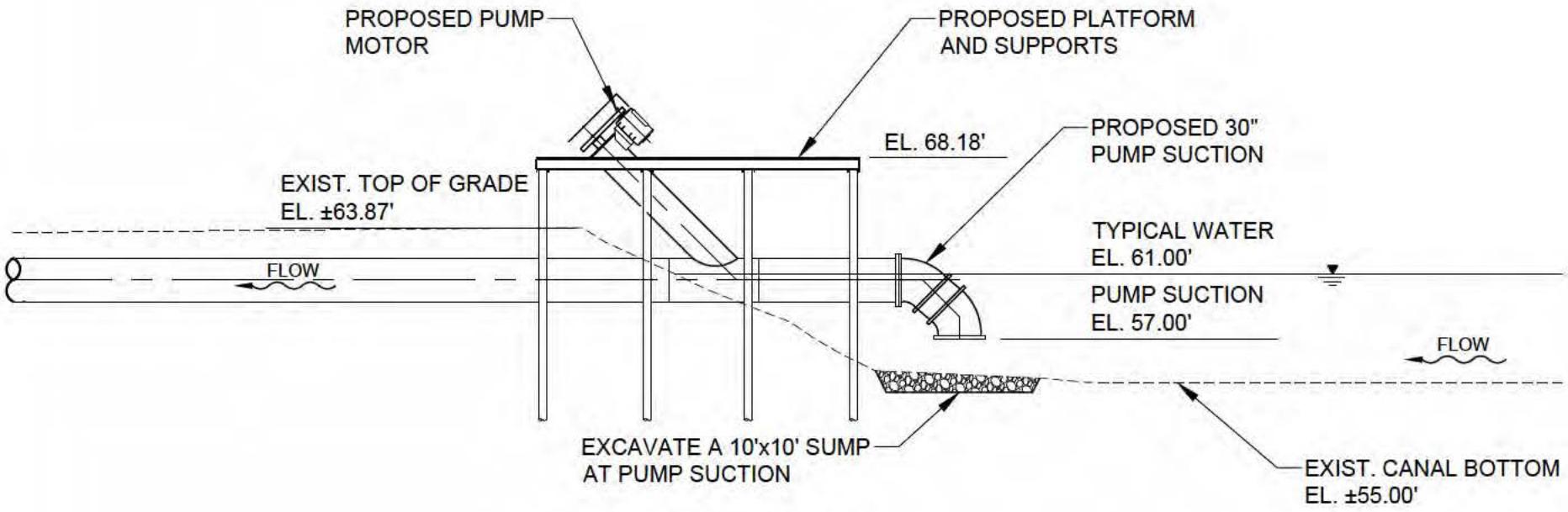

SECTION A-A

SCALE: 1" = 10' HOR.
1" = 10' VERT.

UPPER OCKLAWAHA RIVER BASIN/ LAKE APOPKA NORTH SHORE INTERNAL LEVEE IMPROVEMENTS ORANGE COUNTY, FLORIDA	**ST. JOHNS RIVER WATER MANAGEMENT DISTRICT** P.O. BOX 1429 PALATKA, FLOR DA	
SECTION A-A	ROBERT J. NALEWAY P.E. # 53197 DATE: 11/02/2018	SHEET NUMBER: 8

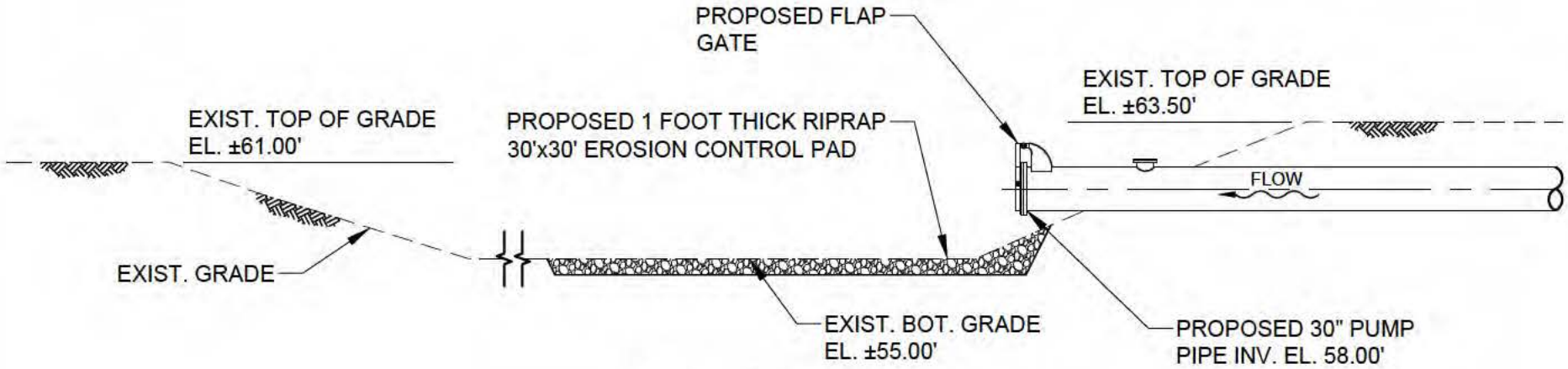

SECTION B-B

SCALE: 1" = 10' HOR.
1" = 10' VERT.

UPPER OCKLAWAHA RIVER BASIN/ LAKE APOPKA NORTH SHORE INTERNAL LEVEE IMPROVEMENTS ORANGE COUNTY, FLORIDA	**ST. JOHNS RIVER WATER MANAGEMENT DISTRICT** P.O. BOX 1429 PALATKA, FLOR DA	
SECTION B-B	ROBERT J. NALEWAY P.E. # 53197 DATE: 11/02/2018	SHEET NUMBER: 9

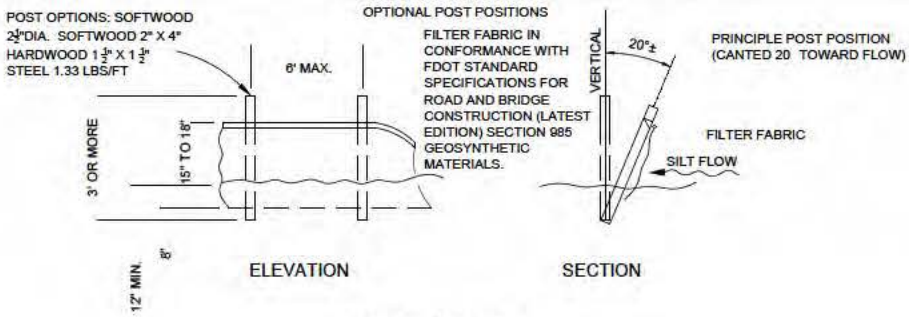

TYPE III SILT FENCE

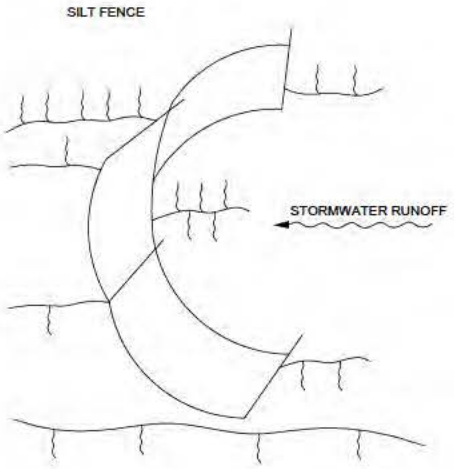

SILT FENCE PROTECTION IN DITCHES WITH INTERMITTENT FLOW

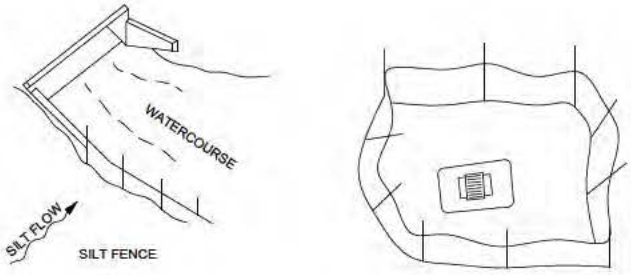

SILT FENCE PROTECTION AROUND DITCH BOTTOM INLETS

SILT FENCE APPLICATIONS

NOTES FOR SILT FENCES

1. TYPE III SILT FENCE TO BE USED AT MOST LOCATIONS. WHERE USED IN DITCHES, THE SPACING FOR TYPE III SILT FENCE SHALL BE IN ACCORDANCE WITH SECTION V OF THE FLORIDA EROSION AND SEDIMENT CONTROL DESIGNER AND REVIEWER MANUAL (JULY 2013).
2. TYPE IV SILT FENCE TO BE USED WHERE LARGE SEDIMENT LOADS ARE ANTICIPATED. SUGGESTED USE IS WHERE FILL SLOPE IS 1:2 OR STEEPER AND LENGTH OF SLOPE EXCEEDS 25 FEET. AVOID USE WHERE THE DETAINED WATER MAY BACK INTO TRAVEL LANES OR OFF THE RIGHT OF WAY.
3. DO NOT CONSTRUCT SILT FENCES ACROSS PERMANENT FLOWING WATERCOURSES. SILT FENCES ARE TO BE AT UPLAND LOCATIONS AND TURBIDITY BARRIERS USED AT PERMANENT BODIES OF WATER.
4. WHERE USED AS SLOPE PROTECTION, SILT FENCE IS TO BE CONSTRUCTED ON 0% LONGITUDINAL GRADE TO AVOID CHANNELIZING RUNOFF ALONG THE LENGTH OF THE FENCE.
5. SILT FENCE TO BE PAID FOR UNDER THE CONTRACT UNIT PRICE FOR STAKED SILT FENCE, (LF).

TEMPORARY SILT FENCE DETAIL

NOT TO SCALE

UPPER OCKLAWAHA RIVER BASIN/ LAKE APOPKA NORTH SHORE INTERNAL LEVEE IMPROVEMENTS ORANGE COUNTY, FLORIDA	**ST. JOHNS RIVER WATER MANAGEMENT DISTRICT** P.O. BOX 1429 PALATKA, FLOR DA	
EROSION AND SEDIMENT CONTROL	ROBERT J. NALEWAY P.E. # 53197 DATE: 11/02/2018	SHEET NUMBER: 10

U:\Projects\CADD\APOPKA\Internal Levee Improvements 2018\PERMIT\overall.dwg

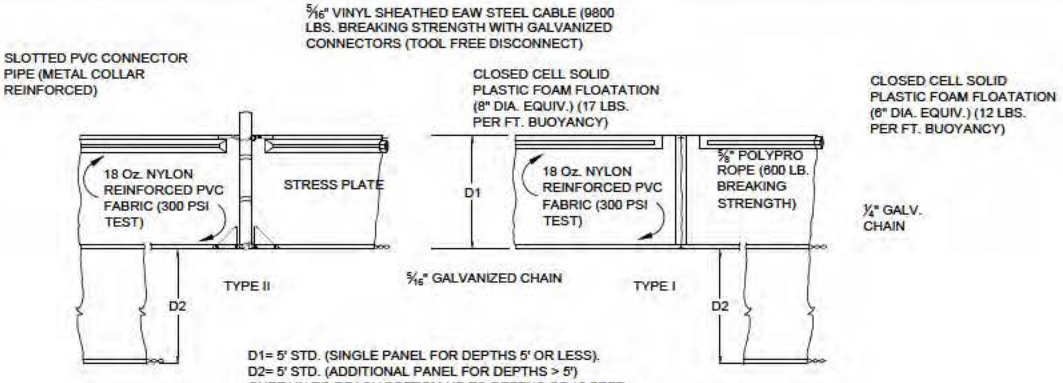

D1= 5' STD. (SINGLE PANEL FOR DEPTHS 5' OR LESS).
D2= 5' STD. (ADDITIONAL PANEL FOR DEPTHS > 5')
CURTAIN TO REACH BOTTOM UP TO DEPTHS OF 10 FEET
TWO (2) PANELS TO BE USED FOR DEPTHS GREATER THAN
10 FEET UNLESS SPECIAL DEPTH CURTAINS SPECIFICALLY
CALLED FOR IN THE PLANS OR AS DETERMINED BY THE ENGINEER.

NOTICE: COMPONENTS OF TYPE I AND II MAY BE SIMILAR OR IDENTICAL TO PROPRIETARY DESIGN. ANY INFRINGEMENT ON THE PROPRIETARY RIGHTS OF THE DESIGNER SHALL BE THE SOLE RESPONSIBILITY OF THE USER. SUBSTITUTIONS FOR TYPES I AND II SHALL BE AS APPROVED BY THE ENGINEER.

FLOATING TURBIDITY BARRIERS

NOT TO SCALE

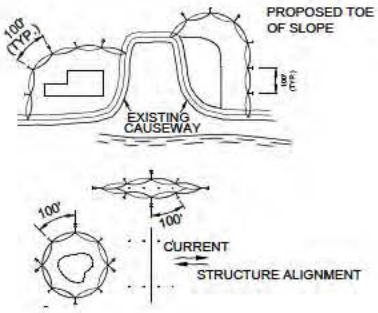

GENERAL NOTES:

1. FLOATING TURBIDITY BARRIERS ARE TO BE PAID FOR UNDER THE CONTRACT UNIT PRICE FOR FLOATING TURBIDITY BARRIER, LF.
2. STAKED TURBIDITY BARRIERS ARE TO BE PAID FOR UNDER THE CONTRACT UNIT PRICE FOR STAKED TURBIDITY BARRIER, LF.

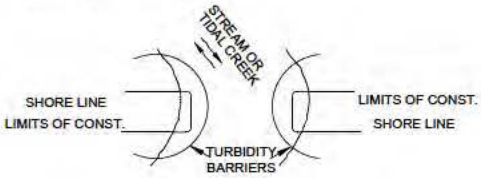

NOTES:

1. TURBIDITY BARRIERS ARE TO BE USED IN ALL PERMANENT BODIES OF WATER REGARDLESS OF WATER DEPTH.
2. NUMBER AND SPACING OF ANCHORS DEPENDENT ON CURRENT VELOCITIES.
3. DEPLOYMENT OF BARRIER AROUND PILE LOCATIONS MAY VARY TO ACCOMMODATE CONSTRUCTION OPERATIONS.
4. NAVIGATION MAY REQUIRE SEGMENTING BARRIER DURING CONSTRUCTION OPERATIONS.
5. TURBIDITY BARRIERS SHALL CONFORM TO SECTION 104 OF THE FLORIDA DEPARTMENT OF TRANSPORTATION STANDARD SPECIFICATIONS FOR ROAD AND BRIDGE CONSTRUCTION, LATEST EDITION.

LEGEND

- PILE LOCATIONS
- DREDGE OR FILL AREA
- MOORING BUOY W/ANCHOR
- ANCHOR
- BARRIER MOVEMENT DUE TO CURRENT ACTION

TURBIDITY BARRIER APPLICATIONS

NOT TO SCALE

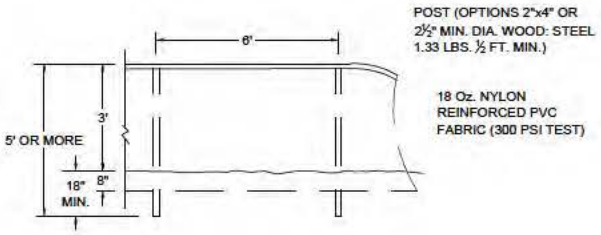

STAKED TURBIDITY BARRIER

NOT TO SCALE

NOTES:

TURBIDITY BARRIERS FOR FLOWING STREAMS AND TIDAL CREEKS MAY BE EITHER FLOATING, OR STAKED TYPES OR ANY COMBINATIONS OF TYPES THAT WILL SUIT SITE CONDITIONS AND MEET EROSION CONTROL AND WATER QUALITY REQUIREMENTS. THE BARRIER TYPE(S) WILL BE AT THE CONTRACTORS OPTIONS UNLESS OTHERWISE SPECIFIED IN THE PLANS, HOWEVER PAYMENT WILL BE UNDER THE PAY ITEM(S) ESTABLISHED IN THE PLANS FOR FLOATING TURBIDITY BARRIERS TO BE INSTALLED IN VERTICAL POSITION UNLESS OTHERWISE DIRECTED BY THE DISTRICT.

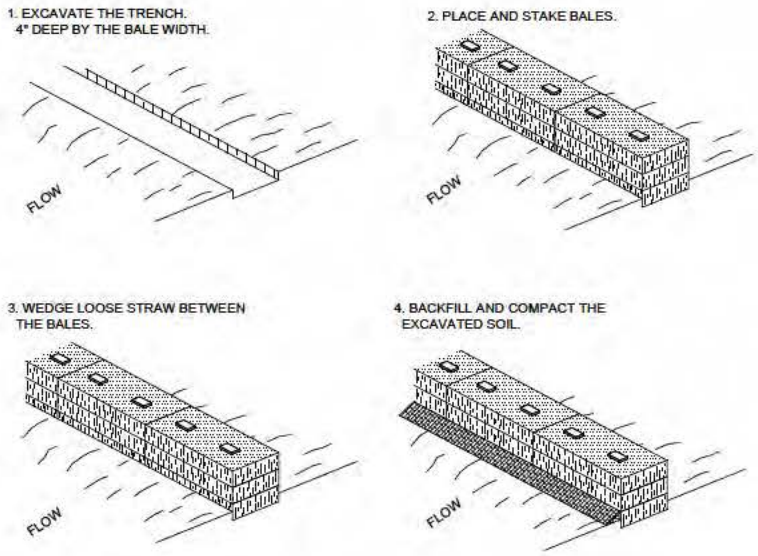

NOTES:

1. INSPECTION SHALL BE FREQUENT AND REPAIR OR REPLACEMENT SHALL BE MADE PROMPTLY AS NEEDED.

2. BALES SHALL BE REMOVED WHEN THEY HAVE SERVED THEIR USEFULNESS SO AS NOT TO BLOCK OR IMPEDE STORM FLOW OR DRAINAGE.

HAY BALE BARRIER

NOT TO SCALE

EROSION AND SEDIMENT CONTROL NOTES:

1. THE CONTRACTOR IS RESPONSIBLE FOR REMOVING SILT FROM SITE IF NOT REUSABLE ON-SITE AND ASSURING PLAN ALIGNMENT AND GRADE IN ALL WORK AT COMPLETION OF CONSTRUCTION.

2. ON-SITE PROTECTION IN ADDITION TO THE ABOVE MUST BE PROVIDED THAT WILL NOT PERMIT SILT TO LEAVE THE PROJECT CONFINES DUE TO UNSEEN CONDITIONS OR ACCIDENTS.

3. THE FILTER BARRIER SHALL BE ENTRENCHED AND BACKFILLED. A TRENCH SHALL BE EXCAVATED TO A MINIMUM DEPTH OF 8 INCHES. THE EXCAVATED SOIL SHALL BE BACKFILLED AND COMPACTED AGAINST THE FILTER BARRIER.

4. SILT FENCES AND FILTER BARRIERS SHALL BE INSPECTED IMMEDIATELY AFTER EACH RAINFALL AND AT LEAST DAILY DURING PROLONGED RAINFALL. ANY REQUIRED REPAIRS SHALL BE MADE IMMEDIATELY.

5. SHOULD THE FABRIC ON A SILT FENCE OR FILTER BARRIER DECOMPOSE OR BECOME INEFFECTIVE PRIOR TO THE END OF THE EXPECTED USABLE LIFE AND THE BARRIER STILL BE NECESSARY, THE FABRIC SHALL BE REPLACED IMMEDIATELY.

6. ANY SEDIMENT DEPOSITS REMAINING IN PLACE AFTER THE SILT FENCE OR FILTER BARRIER IS NO LONGER REQUIRED SHALL BE DRESSED TO CONFORM WITH THE EXISTING GRADE, PREPARED AND GRASSED.

7. THE CONTRACTOR IS RESPONSIBLE FOR FOLLOWING THE BEST EROSION AND SEDIMENT CONTROL PRACTICES AS OUTLINED IN THE PLANS, SPECIFICATIONS, PERMITS, AND ST. JOHNS RIVER WATER MANAGEMENT DISTRICT CRITERIA.

8. FOR ADDITIONAL INFORMATION ON SEDIMENT AND EROSION CONTROL REFER TO THE STATE OF FLORIDA EROSION AND SEDIMENT CONTROL DESIGNER AND REVIEWER MANUAL (LATEST EDITION).

9. ALL DISTURBED AREAS SHALL BE GRASSED, FERTILIZED, WATERED AND MAINTAINED UNTIL A PERMANENT VEGETATIVE COVER IS ESTABLISHED. GRASSING SHALL CONFORM TO THE REQUIREMENTS OF SECTIONS 570 AND 981 THRU 983 OF THE FLORIDA DEPARTMENT OF TRANSPORTATION STANDARD SPECIFICATION FOR ROAD AND BRIDGE CONSTRUCTION, LATEST EDITIONS. NOTE THAT OTHER GRASSING ALTERNATIVES MAY BE USED WITH PRIOR DISTRICT APPROVAL.