ATTACHMENT NO. 24

PERMIT SKETCHES

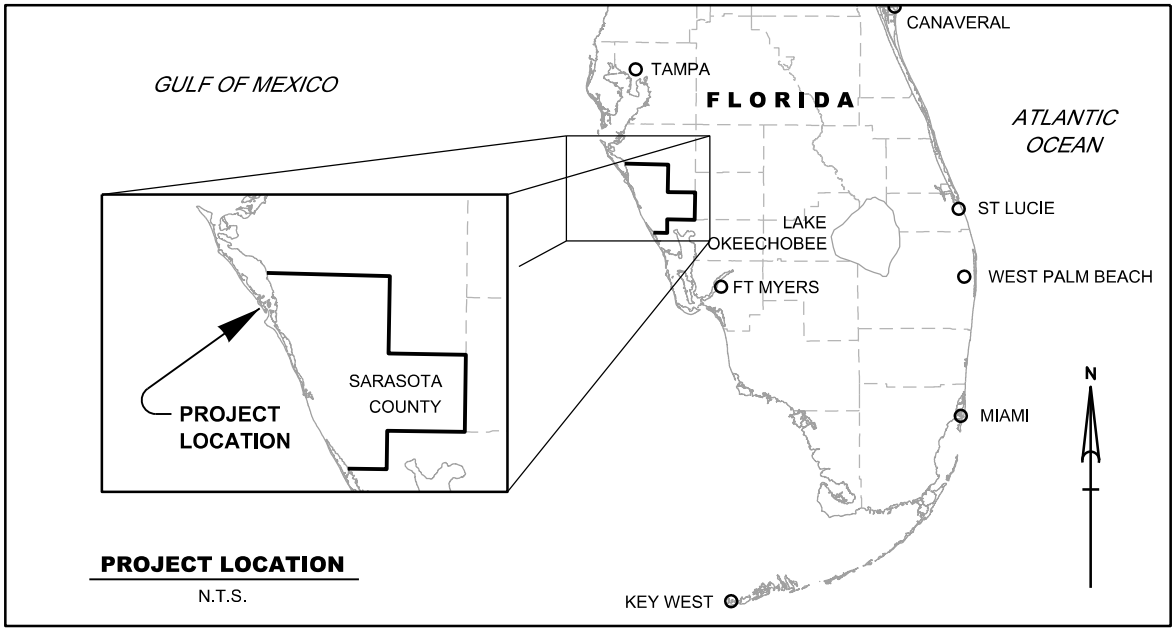

PROJECT LOCATION
N.T.S.

INDEX TO DRAWINGS

PLATE	TITLE
01	PROJECT OVERVIEW
02	PROJECT VICINITY
03	PROJECT TIDAL DATUM RELATIONSHIPS
04 - 07	BEACH FILL - PLANE VIEW
08 - 14	BEACH FILL - PROFILE VIEW
15	BORROW AREA - OVERALL PLAN
16 - 19	BORROW AREA - PLAN
20 - 22	BORROW AREA CROSS SECTIONS
23 - 27	SEAGRASS - BORROW AREA PLANS
28	GROIN PLAN OVERALL
29	GROIN No. 1 PLAN VIEW
30	GROIN No. 1 CROSS SECTIONS
31	GROIN No. 1 PROFILE
32	GROIN No. 2 PLAN VIEW
33	GROIN No. 2 CROSS SECTIONS
34	GROIN No. 2 PROFILE

ABBREVIATIONS

B/N = BETWEEN
CBL = CONSTRUCTION BASELINE
EL. = ELEVATION
ECL. = EROSION CONTROL LINE
FDEP. = FLORIDA DEPARTMENT OF ENV. PROTECTION
FDOT. = FLORIDA DEPARTMENT OF TRANSPORTATION
FT. = FOOT/FEET
MHW. = MEAN HIGH WATER
MLW. = MEAN LOW WATER
OFW. = OUTSTANDING FLORIDA WATERBODY
NAD. = NORTH AMERICAN DATUM
NAVD88. = NORTH ATLANTIC VERTICAL DATUM OF 1988.
NTS. = NOT TO SCALE
TYP. = TYPICAL

GENERAL NOTES:

1. REFER TO THIS PLATE FOR PROJECT LOCATION, PLATE INDEX, ABBREVIATIONS AND LEGEND
2. THE PLANE COORDINATES SHOWN ARE BASED ON THE FLORIDA STATE PLANE WEST COORDINATE SYSTEM (0902) AND REFERENCED TO THE 1990 ADJUSTMENT OF THE NAD OF 1983 (NAD83(90)), UNLESS REFERENCED OTHERWISE IN THE SURVEY NOTES.
3. ELEVATIONS SHOWN ON ALL PLATES ARE IN FEET AND ARE BASED ON NAVD88. ELEVATIONS ARE BELOW THE DATUM UNLESS PRECEEDED BY A (+) SIGN.
4. THE REQUIRED BERM HEIGHT FOR THE PROJECT WILL BE +4.0' REFERENCING NAVD88, LANDWARD EDGE OF BERM IS EL. +4.0, VEGETATION LINE, SEAWALL OR DEVELOPMENT.
5. TIDAL RELATIONSHIPS SHOWN ON PLANS ARE BASED ON NOAA'S VDATUM MODEL VERSION 3.4. REFER TO PLATE 03 FOR OBSERVED TIDAL RELATIONSHIPS WITHIN THE AREA.
6. REFER TO PLATE 04 FOR BEACH SURVEY NOTES AND FOR BORROW AREA SURVEY NOTES REFER TO PLATE 15.

LEGEND

BEACH FILL AREA (PLAN VIEW)
BEACH FILL AREA (PROFILE VIEW)
EXISTING GROUND (PROFILE VIEW)
DNR RANGE MONUMENT
SLOPE INDICATOR SYMBOL W/ FILL
CONSTRUCTION BASELINE W. STATIONING
EROSION CONTROL LINE
FDEP AZIMUTH BEARING
MEAN HIGH WATER LINE
BORING
BORROW AREA
SARASOTA BAY OFW
T18 — CULTURAL RESOURCE TARGET W/ 300' BUFFER

US Army Corps of Engineers © Jacksonville District

NOT FOR CONSTRUCTION PERMIT DRAWINGS

DEPARTMENT OF THE ARMY
JACKSONVILLE DISTRICT, CORPS OF ENGINEERS
JACKSONVILLE, FLORIDA

HURRICANE STORM DAMAGE REDUCTION PROJECT
SARASOTA COUNTY, FLORIDA

LIDO KEY BEACH EROSION CONTROL PROJECT

PROJECT OVERVIEW

DATE	DESIGNED	APPROVED
2/26/15	J.W.L.	L.R.P.
9/03/15	J.W.L.	J.E.B.
7/15/16	J.W.L.	J.E.B.

DATE: MAR. 2014
DWN BY: J.W.L.
PLATE: 01 OF 34

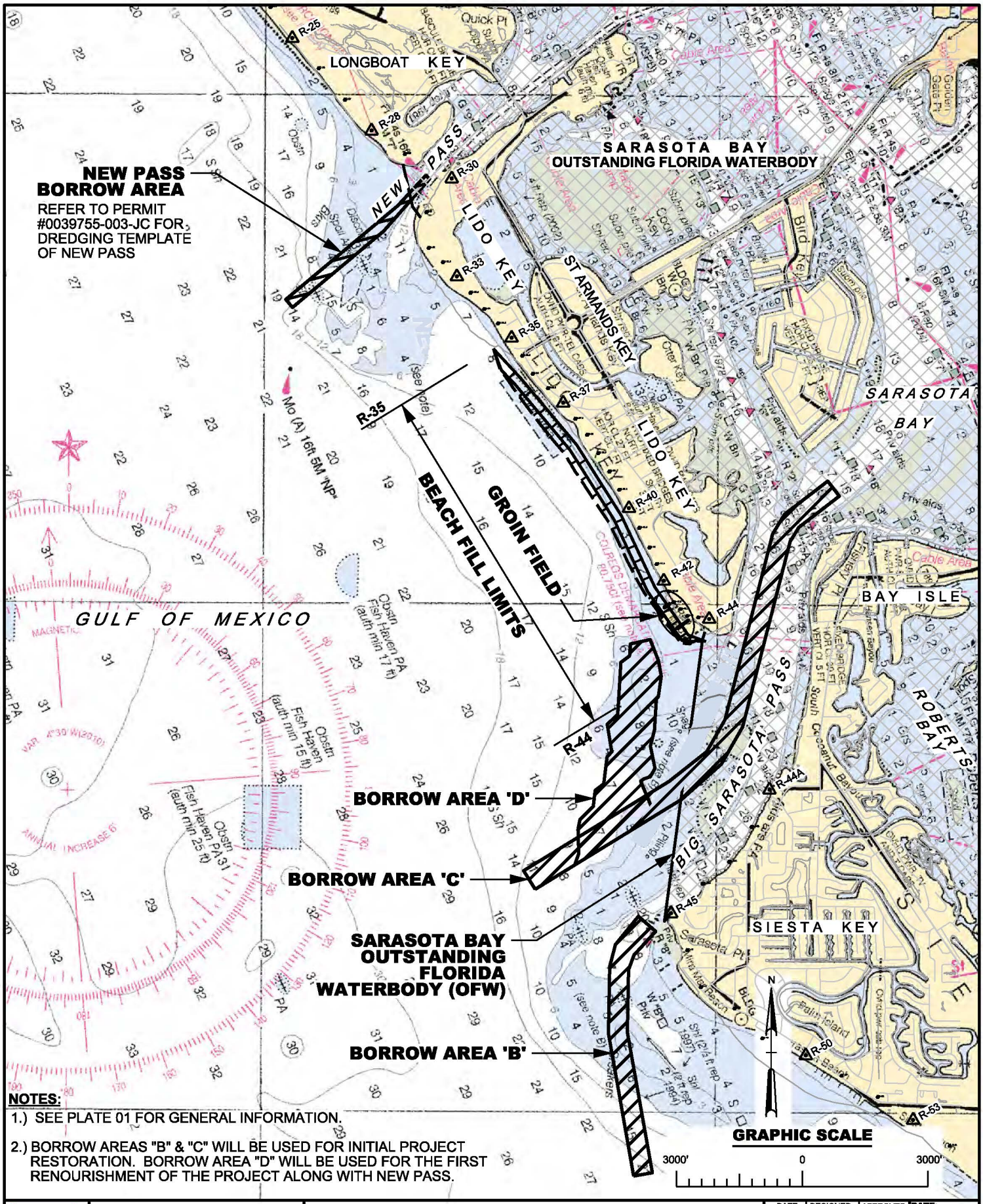

NOTES:

1.) SEE PLATE 01 FOR GENERAL INFORMATION.

2.) BORROW AREAS "B" & "C" WILL BE USED FOR INITIAL PROJECT RESTORATION. BORROW AREA "D" WILL BE USED FOR THE FIRST RENOURISHMENT OF THE PROJECT ALONG WITH NEW PASS.

US Army Corps of Engineers® Jacksonville District	**NOT FOR CONSTRUCTION PERMIT DRAWINGS**	HURRICANE STORM DAMAGE REDUCTION PROJECT SARASOTA COUNTY, FLORIDA	DATE	DESIGNED	APPROVED	DATE: MAR. 2014
	DEPARTMENT OF THE ARMY	**LIDO KEY BEACH EROSION CONTROL PROJECT**	2/26/15	J.W.L.	L.R.P.	DWN BY: J.W.L.
	JACKSONVILLE DISTRICT, CORPS OF ENGINEERS JACKSONVILLE, FLORIDA	**PROJECT VICINITY**	9/03/15	J.W.L.	J.E.B.	PLATE: 02 OF 34

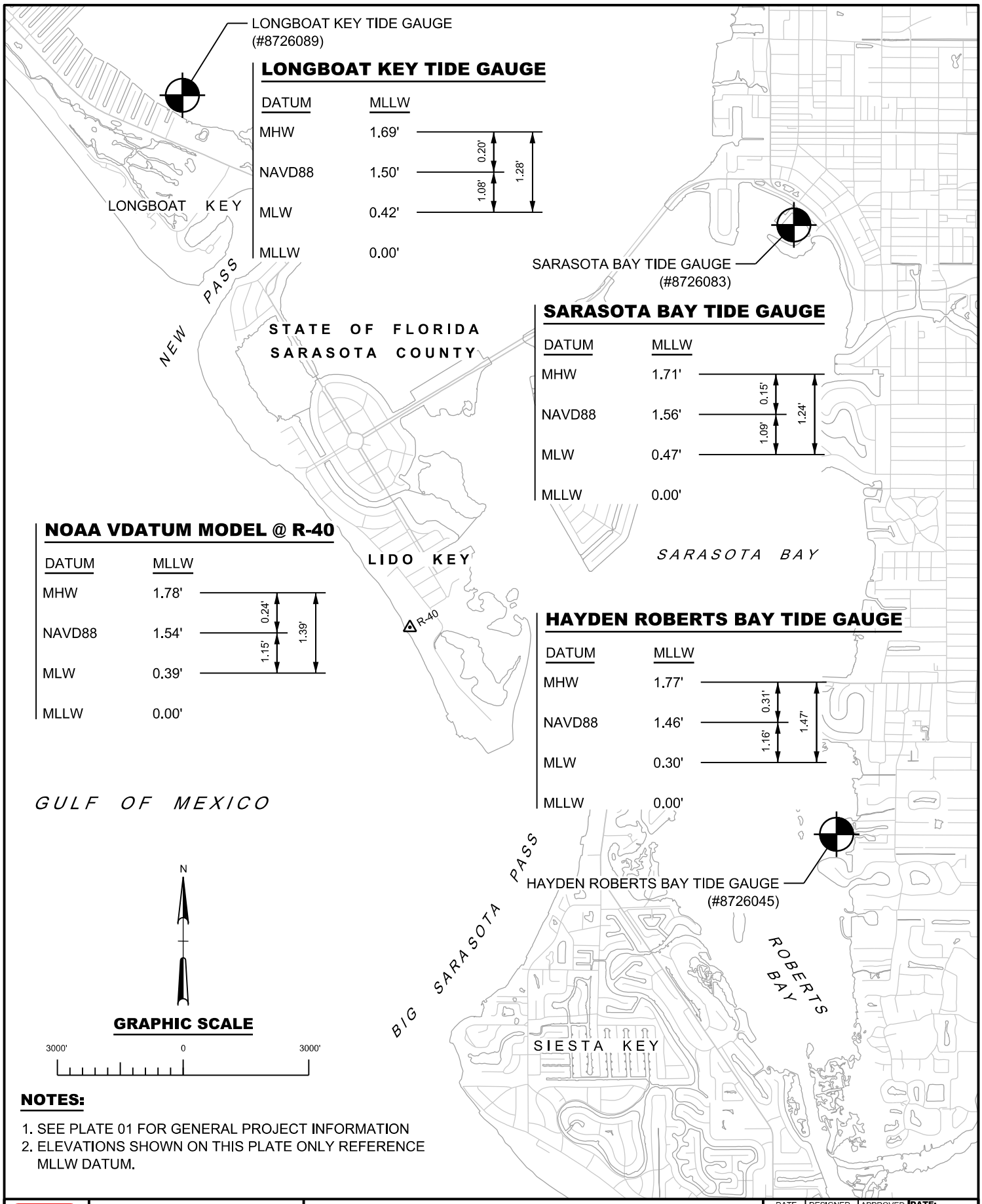

LONGBOAT KEY TIDE GAUGE

DATUM	MLLW
MHW	1.69'
NAVD88	1.50'
MLW	0.42'
MLLW	0.00'

0.20' 1.08' 1.28'

SARASOTA BAY TIDE GAUGE

DATUM	MLLW
MHW	1.71'
NAVD88	1.56'
MLW	0.47'
MLLW	0.00'

0.15' 1.09' 1.24'

NOAA VDATUM MODEL @ R-40

DATUM	MLLW
MHW	1.78'
NAVD88	1.54'
MLW	0.39'
MLLW	0.00'

0.24' 1.15' 1.39'

HAYDEN ROBERTS BAY TIDE GAUGE

DATUM	MLLW
MHW	1.77'
NAVD88	1.46'
MLW	0.30'
MLLW	0.00'

0.31' 1.16' 1.47'

GRAPHIC SCALE

3000' 0 3000'

NOTES:

1. SEE PLATE 01 FOR GENERAL PROJECT INFORMATION
2. ELEVATIONS SHOWN ON THIS PLATE ONLY REFERENCE MLLW DATUM.

US Army Corps of Engineers © Jacksonville District

NOT FOR CONSTRUCTION PERMIT DRAWINGS

DEPARTMENT OF THE ARMY
JACKSONVILLE DISTRICT, CORPS OF ENGINEERS
JACKSONVILLE, FLORIDA

HURRICANE STORM DAMAGE REDUCTION PROJECT
SARASOTA COUNTY, FLORIDA

LIDO KEY BEACH EROSION CONTROL PROJECT

PROJECT TIDAL DATUM RELATIONSHIPS

DATE	DESIGNED	APPROVED
2/26/15	J.W.L.	L.R.P.
9/03/15	J.W.L.	J.E.B.

DATE: MAR. 2014
DWN BY: J.W.L.
PLATE: 03 OF 34

BEACH SURVEY NOTES:

1. SURVEY, 13-152, WAS PERFORMED BY WHIDDEN SURVEYING AND MAPPING, INC. B/N 14-16 AUGUST, 2013.

2. ONSHORE AND OFFSHORE PROFILES WERE CONDUCTED B/N FDEP RANGES R-32 TO R-44 AND INTERMEDIATE MONUMENTS.

3. ALL LEVELING AND BATHYMETRIC SURVEYING CONFORMED TO THE FDEP SPECIFICATIONS FOR MONITORING SURVEYS.

   ONSHORE PROFILES WERE COLLECTED ALONG THE FDEP ALIGNMENTS USING RTK/GPS MEASUREMENTS.

   OFFSHORE PROFILE DATA COLLECTION WAS PERFORMED USING RTK GPS, HYPACK NAVIGATION SOFTWARE, AN ODOM HYDROTRAC FATHOMETER AND TSS DMS-10 MOTION REFERENCE UNIT.

4. HORIZONTAL DATUM: COORDINATE VALUES ARE REFERENCED TO THE FLORIDA STATE PLANE COORDINATE SYSTEM, WEST ZONE, NORTH AMERICAN DATUM OF 1983 (NAD 83(2011)).

5. VERTICAL DATUM: ELEVATION VALUES ARE REFERENCED TO THE NORTH AMERICAN VERTICAL DATUM OF 1988 (NAVD 88). ALL ELEVATIONS ARE BELOW REFERENCE DATUM UNLESS PRECEDED BY A (+) SIGN.

6. ALL DATA WAS COLLECTED USING THE UNITS OF U.S. SURVEY FEET.

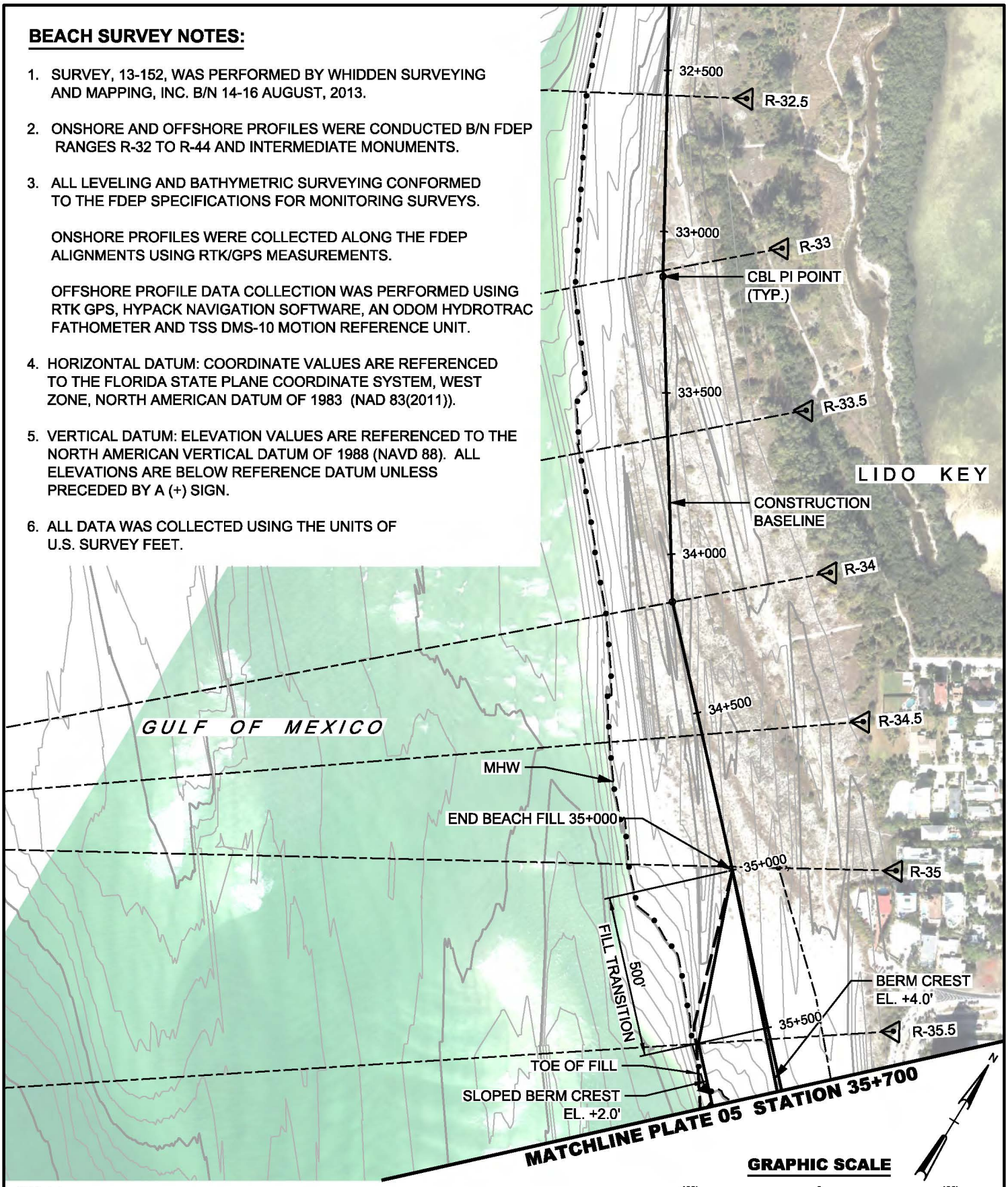

GRAPHIC SCALE

400' 0 400'

NOTE:

1. SEE PLATE 01 FOR GENERAL PROJECT INFORMATION

US Army Corps of Engineers® Jacksonville District	**NOT FOR CONSTRUCTION PERMIT DRAWINGS**	HURRICANE STORM DAMAGE REDUCTION PROJECT SARASOTA COUNTY, FLORIDA	DATE	DESIGNED	APPROVED	DATE: MAR. 2014
	DEPARTMENT OF THE ARMY	**LIDO KEY BEACH EROSION CONTROL PROJECT**	2/26/15	J.W.L.	L.R.P.	DWN BY: J.W.L.
	JACKSONVILLE DISTRICT, CORPS OF ENGINEERS JACKSONVILLE, FLORIDA	**BEACH FILL - PLAN VIEW**	9/03/15	J.W.L.	J.E.B.	PLATE: 04 OF 34

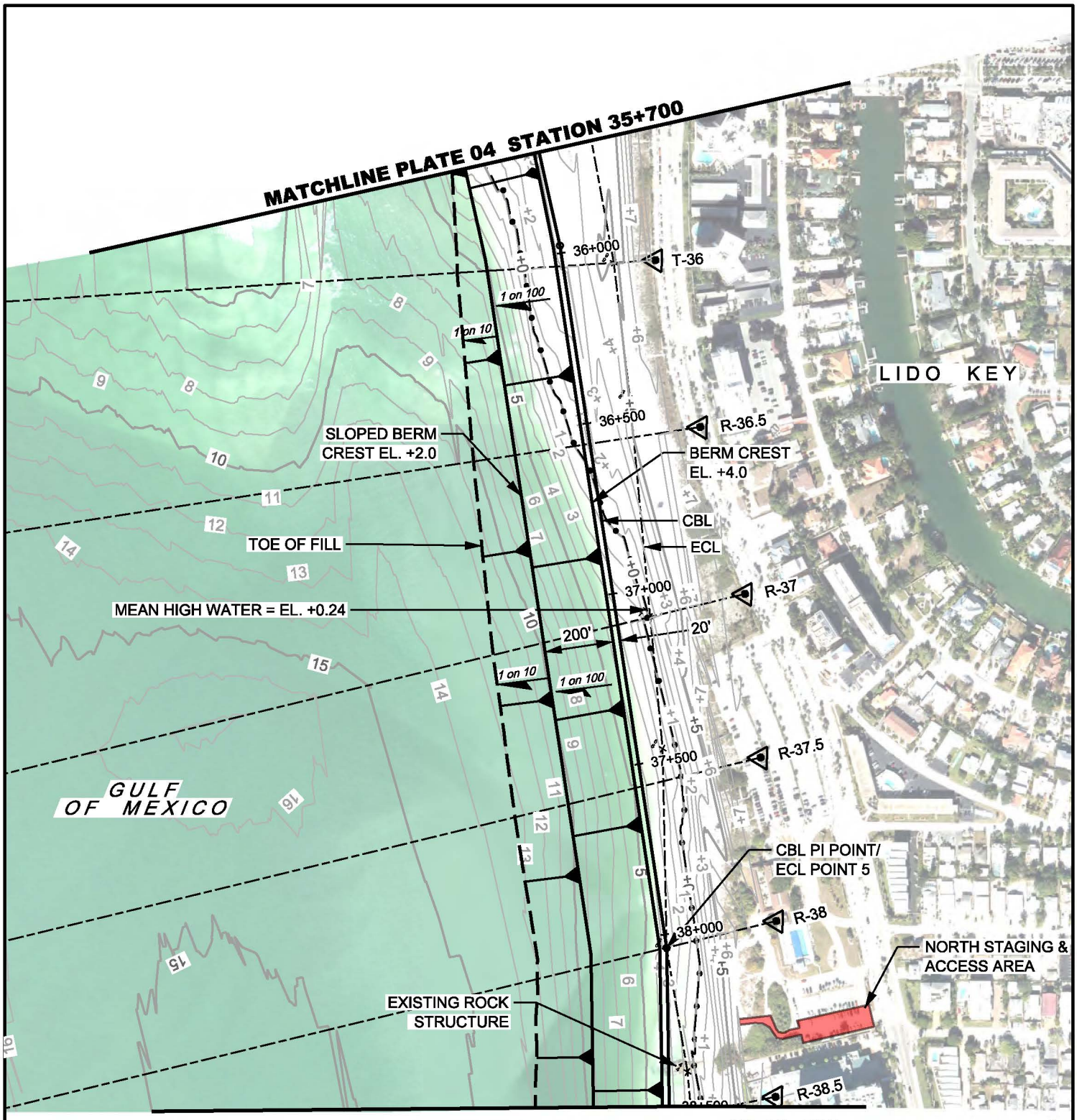

NOTES:

1. SEE PLATE 01 FOR GENERAL PROJECT INFORMATION
2. SEE PLATE 04 FOR BEACH SURVEY NOTES.
3. BERM CREST WIDTH IS 20' FROM CBL THEN SLOPED PUSH BERM BEGINS AND EXTENDS 200' ON A 1 ON 100 SLOPE.

GRAPHIC SCALE

400' 0 400'

US Army Corps of Engineers® Jacksonville District

NOT FOR CONSTRUCTION PERMIT DRAWINGS

DEPARTMENT OF THE ARMY
JACKSONVILLE DISTRICT, CORPS OF ENGINEERS
JACKSONVILLE, FLORIDA

HURRICANE STORM DAMAGE REDUCTION PROJECT
SARASOTA COUNTY, FLORIDA

LIDO KEY BEACH EROSION CONTROL PROJECT

BEACH FILL - PLAN VIEW

DATE	DESIGNED	APPROVED
2/26/15	J.W.L.	L.R.P.
9/03/15	J.W.L.	J.E.B.
7/15/16	J.W.L.	J.E.B.

DATE: MAR. 2014
DWN BY: J.W.L.
PLATE: 05 OF 34

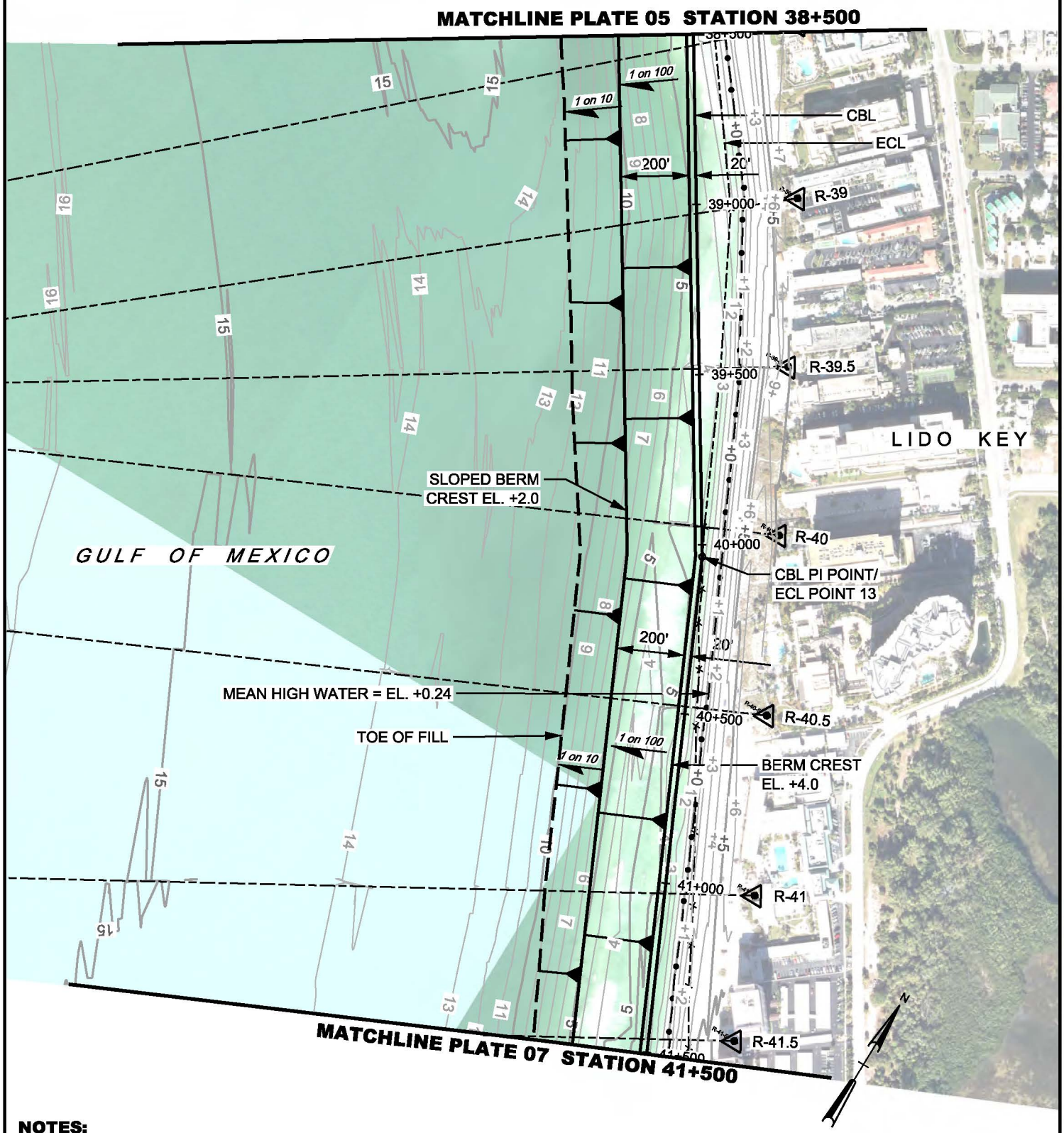

NOTES:

1. SEE PLATE 01 FOR GENERAL PROJECT INFORMATION
2. SEE PLATE 04 FOR BEACH SURVEY NOTES.
3. BERM CREST WIDTH IS 20' FROM CBL THEN SLOPED PUSH BERM BEGINS AND EXTENDS 200' ON A 1 ON 100 SLOPE.

GRAPHIC SCALE

400' 0 400'

US Army Corps of Engineers® Jacksonville District	**NOT FOR CONSTRUCTION PERMIT DRAWINGS**	HURRICANE STORM DAMAGE REDUCTION PROJECT SARASOTA COUNTY, FLORIDA	DATE	DESIGNED	APPROVED	DATE: MAR. 2014
	DEPARTMENT OF THE ARMY JACKSONVILLE DISTRICT, CORPS OF ENGINEERS JACKSONVILLE, FLORIDA	**LIDO KEY BEACH EROSION CONTROL PROJECT**	2/26/15	J.W.L.	L.R.P.	DWN BY: J.W.L.
		BEACH FILL - PLAN VIEW	9/03/15	J.W.L.	J.E.B.	PLATE: 06 OF 34

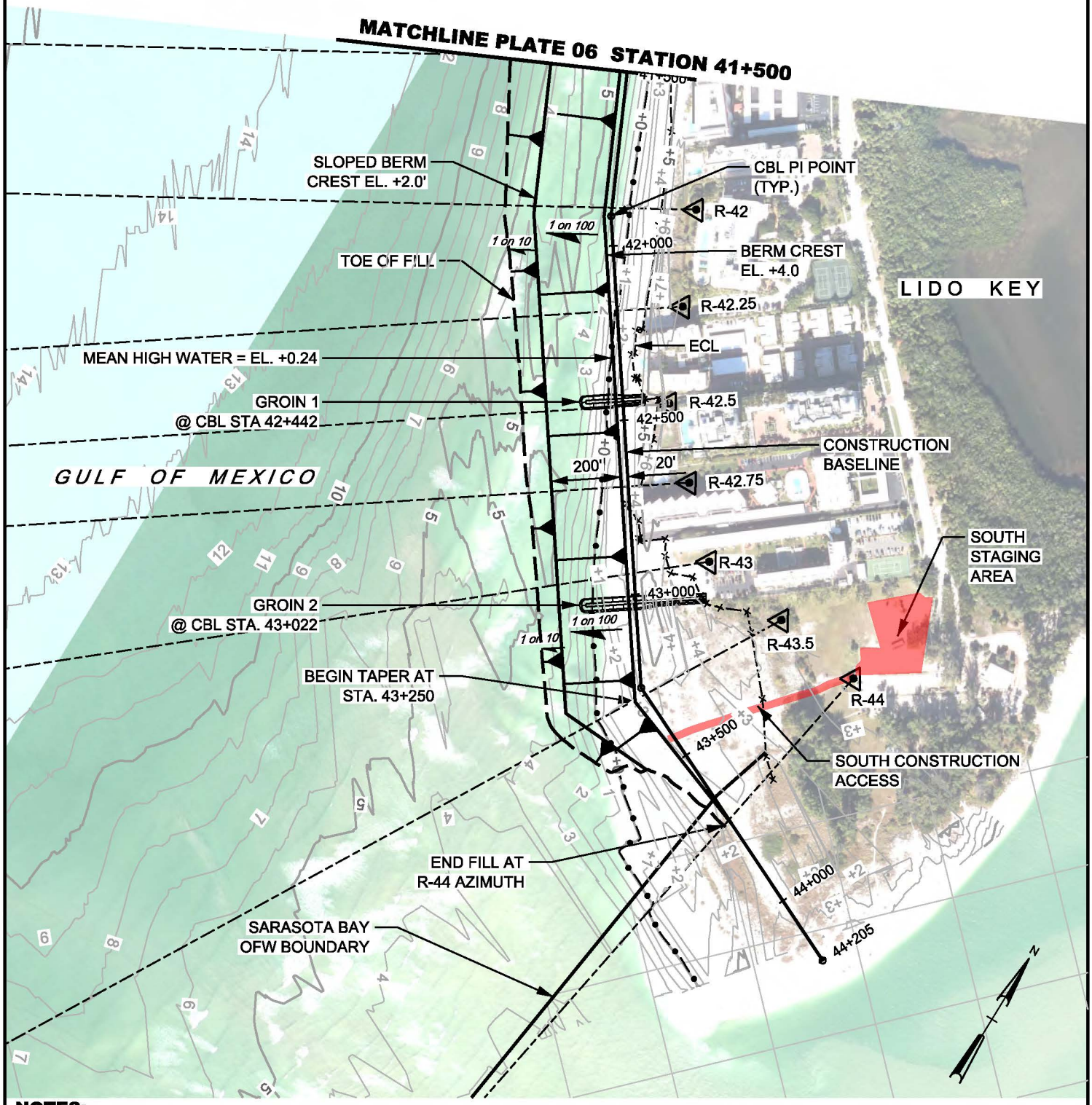

NOTES:

1. SEE PLATE 01 FOR GENERAL PROJECT INFORMATION
2. SEE PLATE 04 FOR BEACH SURVEY NOTES.
3. BERM CREST WIDTH IS 20' FROM CBL THEN SLOPED PUSH BERM BEGINS AND EXTENDS 200' ON A 1 ON 100 SLOPE.

GRAPHIC SCALE

400' 0 400'

US Army Corps of Engineers® Jacksonville District

NOT FOR CONSTRUCTION PERMIT DRAWINGS

DEPARTMENT OF THE ARMY
JACKSONVILLE DISTRICT, CORPS OF ENGINEERS
JACKSONVILLE, FLORIDA

HURRICANE STORM DAMAGE REDUCTION PROJECT
SARASOTA COUNTY, FLORIDA

LIDO KEY BEACH EROSION CONTROL PROJECT

BEACH FILL - PLAN VIEW

DATE	DESIGNED	APPROVED
2/26/15	J.W.L.	L.R.P.
9/03/15	J.W.L.	J.E.B.
7/15/15	J.W.L.	J.E.B.

DATE: MAR. 2014
DWN BY: J.W.L.
PLATE: 07 OF 34

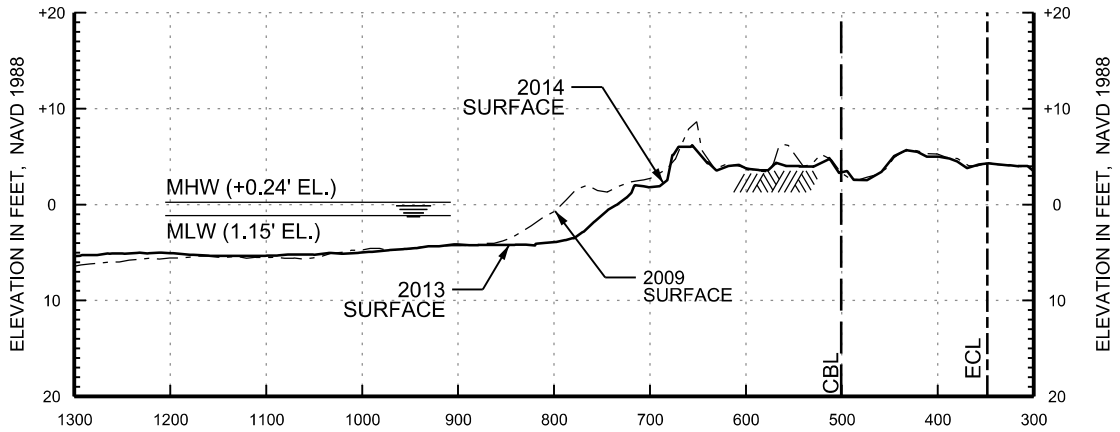

R-34

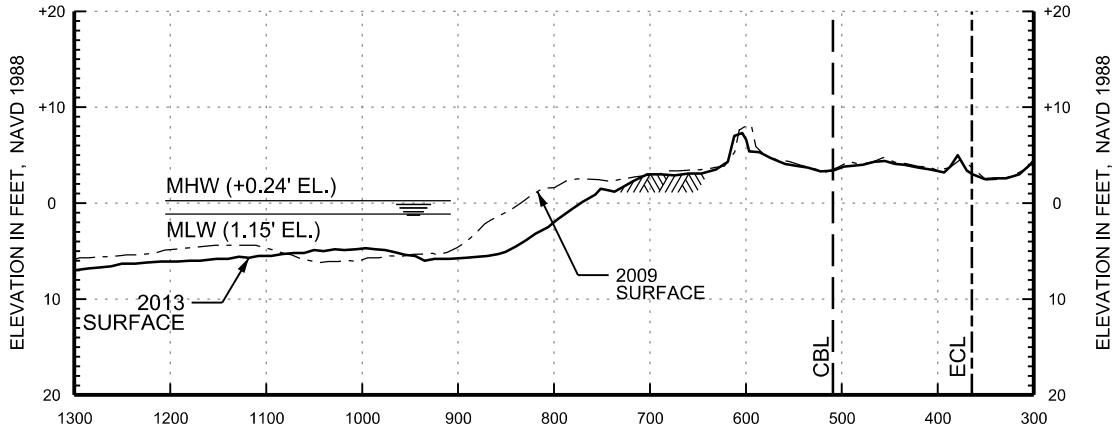

R-35

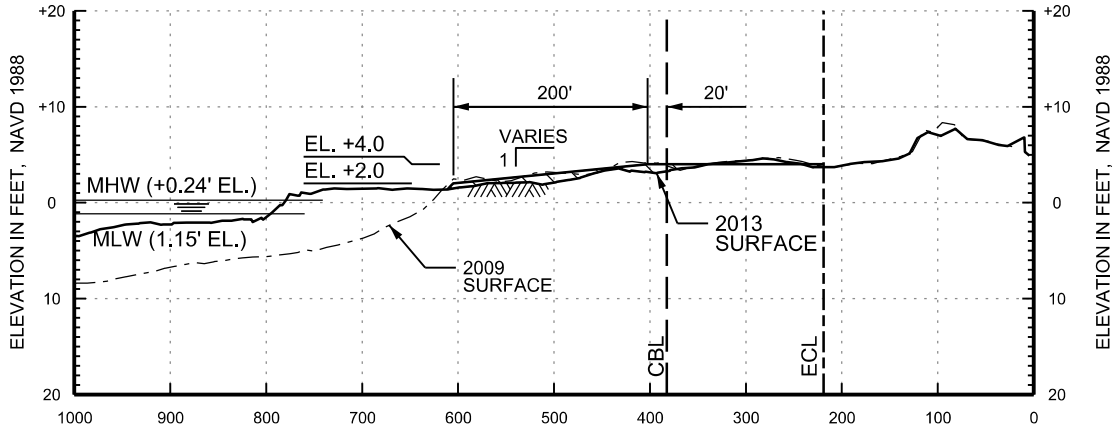

R-35-5

GRAPHIC SCALES

HORIZONTAL: 200' 0 200'

VERTICAL: 20' 0 20'

NOTES:

1. SEE PLATE 01 FOR GENERAL PROJECT INFORMATION
2. THE HORIZONTAL DISTANCES ARE IN FEET AND FOLLOW FDEP RANGE MONUMENT AZIMUTH.

US Army Corps of Engineers © Jacksonville District

NOT FOR CONSTRUCTION PERMIT DRAWINGS

DEPARTMENT OF THE ARMY
JACKSONVILLE DISTRICT, CORPS OF ENGINEERS
JACKSONVILLE, FLORIDA

HURRICANE STORM DAMAGE REDUCTION PROJECT
SARASOTA COUNTY, FLORIDA

LIDO KEY BEACH EROSION CONTROL PROJECT

BEACH FILL - PROFILE VIEW

DATE	DESIGNED	APPROVED
2/26/15	J.W.L.	L.R.P.
9/03/15	J.W.L.	J.E.B.

DATE: MAR. 2014
DWN BY: J.W.L.
PLATE: 08 OF 34

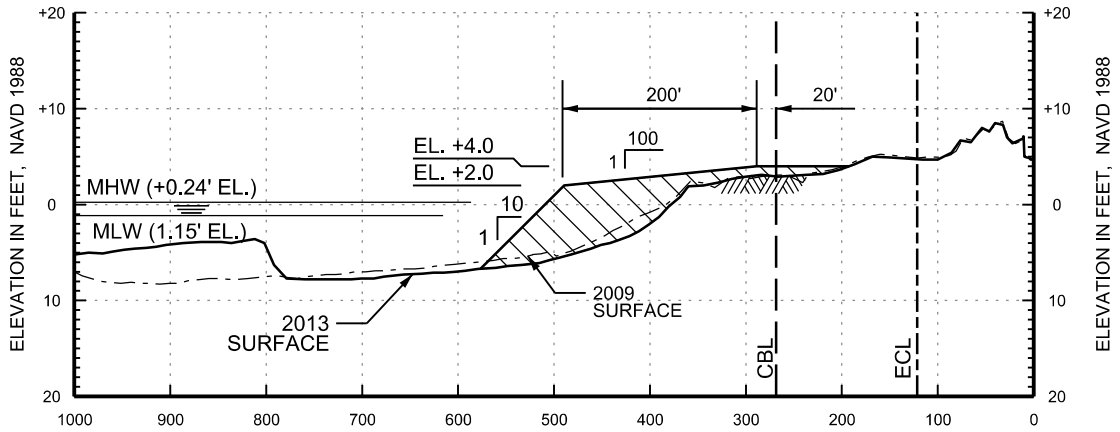

T-36

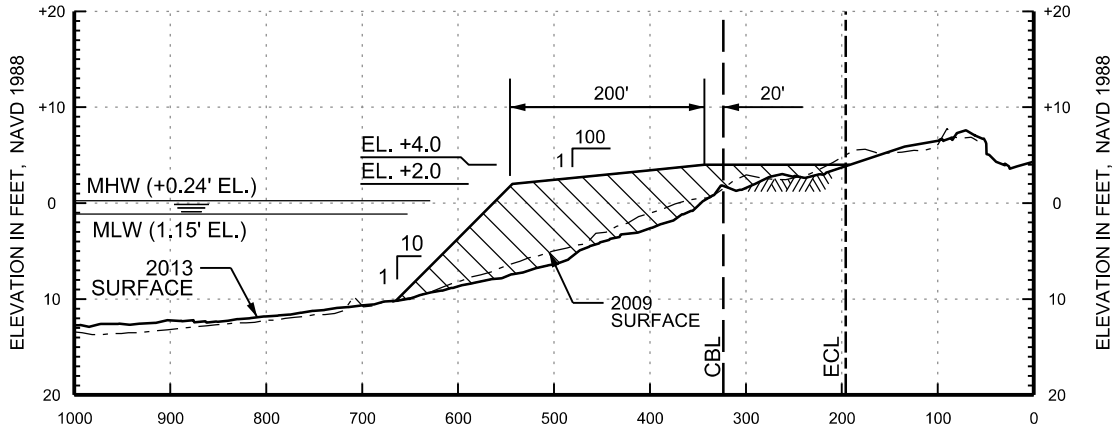

R-36-5

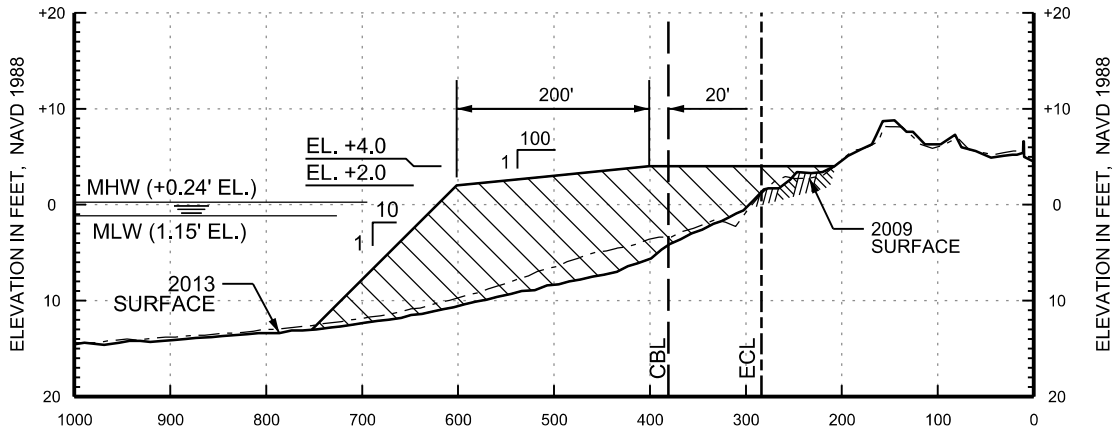

R-37

GRAPHIC SCALES

HORIZONTAL: 200' 0 200'

VERTICAL: 20' 0 20'

NOTES:

1. SEE PLATE 01 FOR GENERAL PROJECT INFORMATION
2. THE HORIZONTAL DISTANCES ARE IN FEET AND FOLLOW FDEP RANGE MONUMENT AZIMUTH.

US Army Corps of Engineers © Jacksonville District

NOT FOR CONSTRUCTION PERMIT DRAWINGS

DEPARTMENT OF THE ARMY
JACKSONVILLE DISTRICT, CORPS OF ENGINEERS
JACKSONVILLE, FLORIDA

HURRICANE STORM DAMAGE REDUCTION PROJECT
SARASOTA COUNTY, FLORIDA

LIDO KEY BEACH EROSION CONTROL PROJECT

BEACH FILL - PROFILE VIEW

DATE	DESIGNED	APPROVED
2/26/15	J.W.L.	L.R.P.
9/03/15	J.W.L.	J.E.B.

DATE: MAR. 2014
DWN BY: J.W.L.
PLATE: 09 OF 34

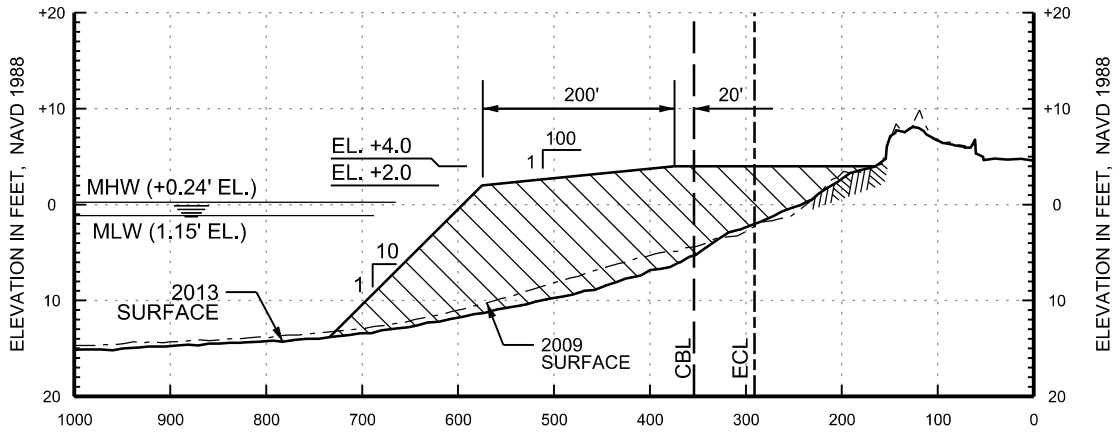

R-37-5

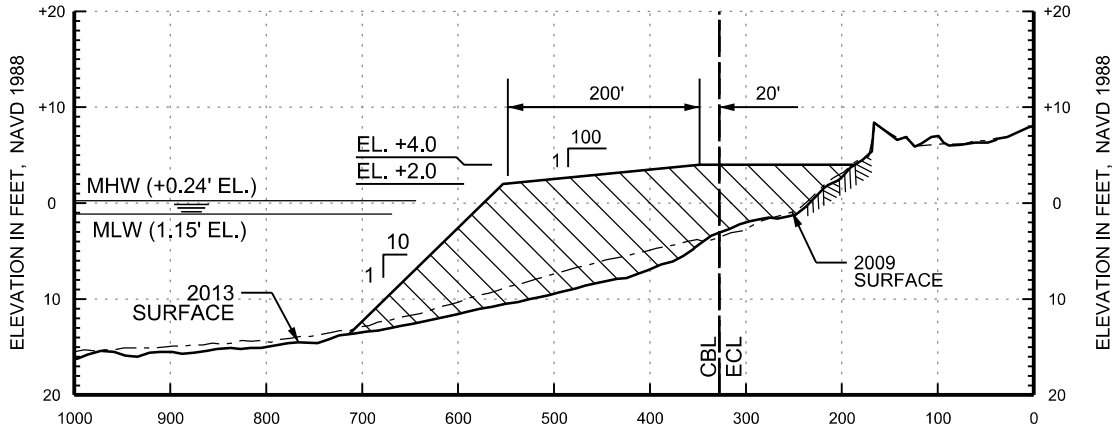

R-38

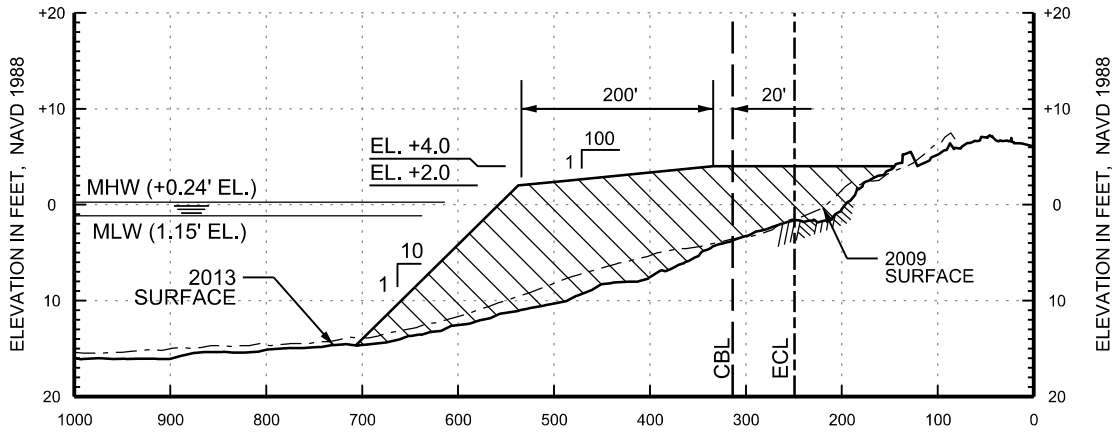

R-38-5

GRAPHIC SCALES

HORIZONTAL: 200' 0 200'

VERTICAL: 20' 0 20'

NOTES:

1. SEE PLATE 01 FOR GENERAL PROJECT INFORMATION
2. THE HORIZONTAL DISTANCES ARE IN FEET AND FOLLOW FDEP RANGE MONUMENT AZIMUTH.

US Army Corps of Engineers © Jacksonville District

NOT FOR CONSTRUCTION PERMIT DRAWINGS

DEPARTMENT OF THE ARMY
JACKSONVILLE DISTRICT, CORPS OF ENGINEERS
JACKSONVILLE, FLORIDA

HURRICANE STORM DAMAGE REDUCTION PROJECT
SARASOTA COUNTY, FLORIDA

LIDO KEY BEACH EROSION CONTROL PROJECT

BEACH FILL - PROFILE VIEW

DATE	DESIGNED	APPROVED
2/26/15	J.W.L.	L.R.P.
9/03/15	J.W.L.	J.E.B.

DATE: MAR. 2014
DWN BY: J.W.L.
PLATE: 10 OF 34

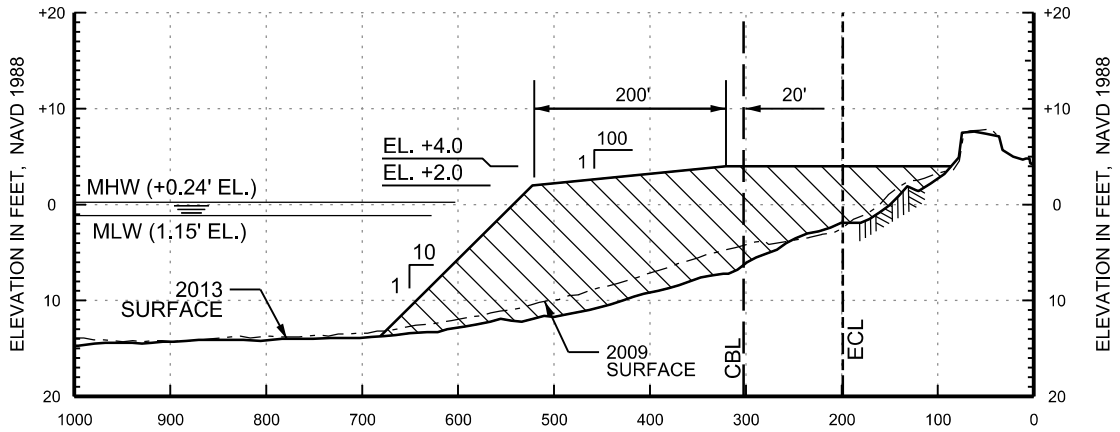

R-39

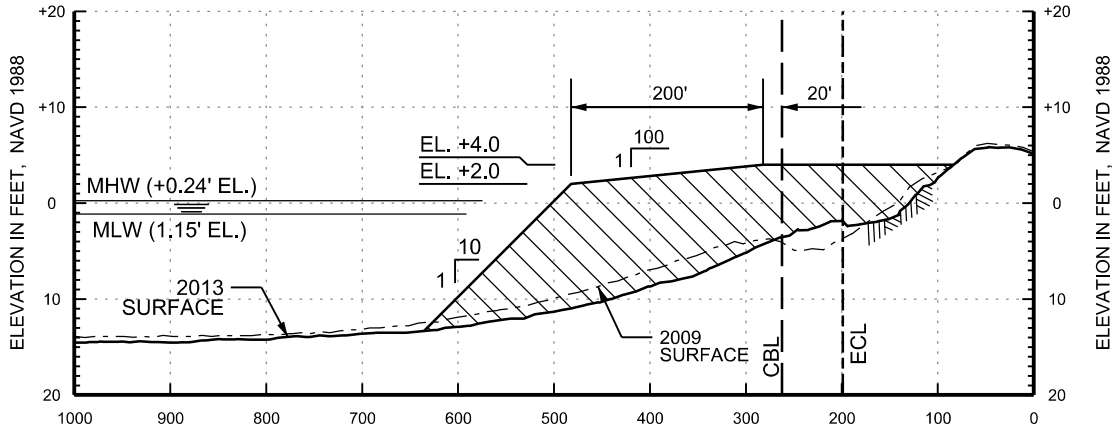

R-39-5

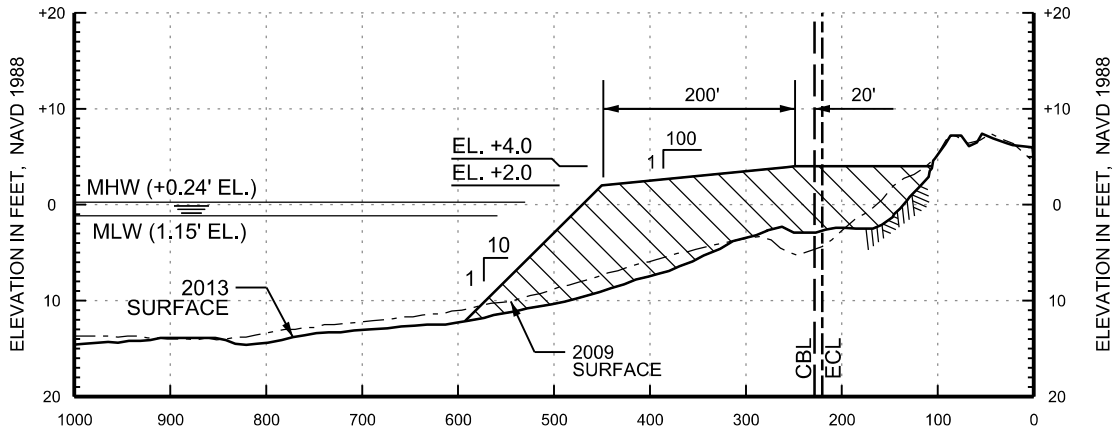

R-40

GRAPHIC SCALES

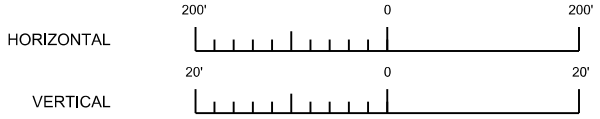

NOTES:

1. SEE PLATE 01 FOR GENERAL PROJECT INFORMATION
2. THE HORIZONTAL DISTANCES ARE IN FEET AND FOLLOW FDEP RANGE MONUMENT AZIMUTH.

US Army Corps of Engineers © Jacksonville District

NOT FOR CONSTRUCTION PERMIT DRAWINGS

DEPARTMENT OF THE ARMY
JACKSONVILLE DISTRICT, CORPS OF ENGINEERS
JACKSONVILLE, FLORIDA

HURRICANE STORM DAMAGE REDUCTION PROJECT
SARASOTA COUNTY, FLORIDA

LIDO KEY BEACH EROSION CONTROL PROJECT

BEACH FILL - PROFILE VIEW

DATE	DESIGNED	APPROVED
2/26/15	J.W.L.	L.R.P.
9/03/15	J.W.L.	J.E.B.

DATE: MAR. 2014
DWN BY: J.W.L.
PLATE: 11 OF 34

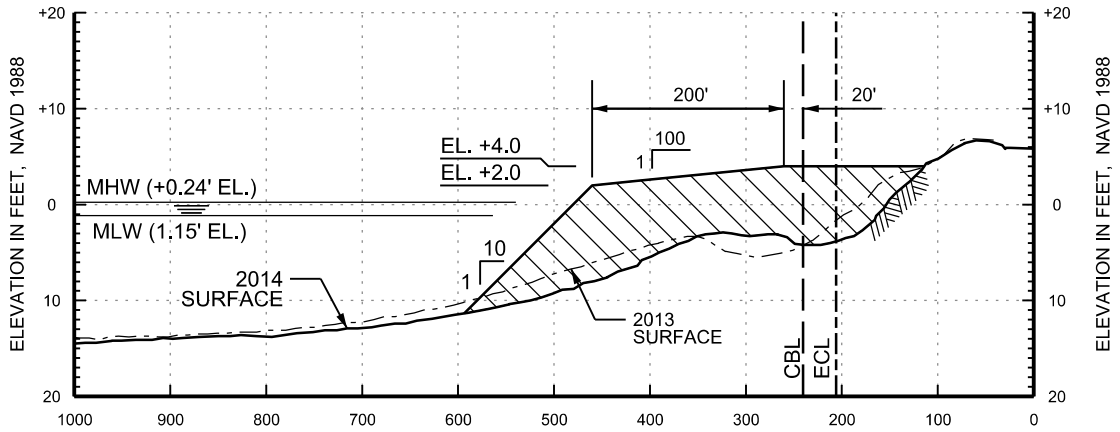

R-40-5

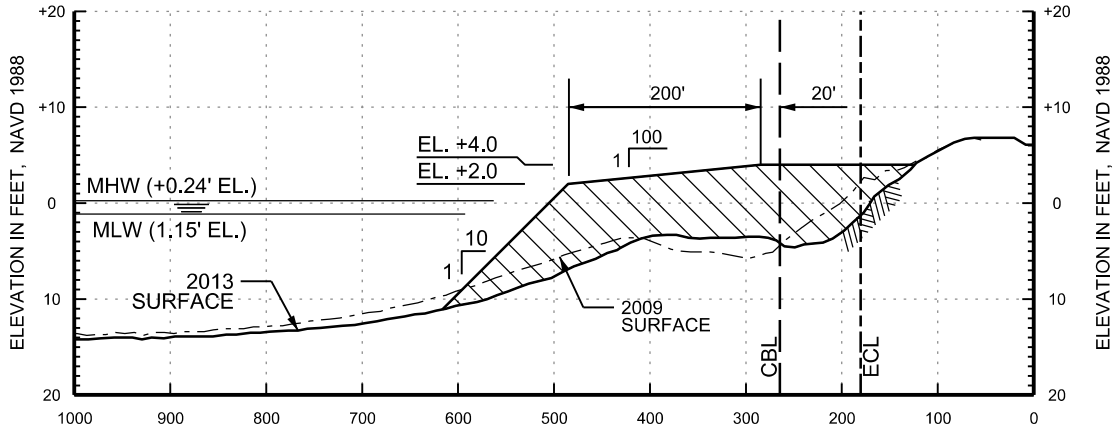

R-41

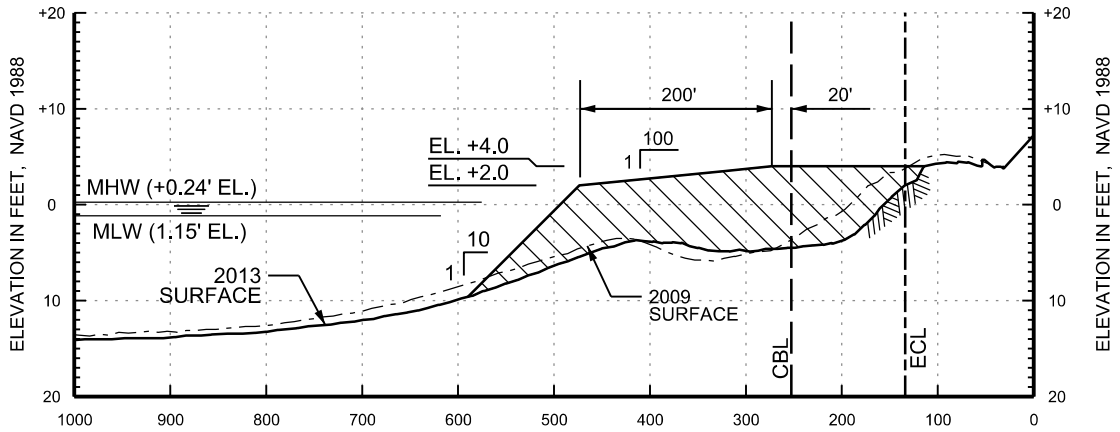

R-41-5

GRAPHIC SCALES

HORIZONTAL: 200' 0 200'

VERTICAL: 20' 0 20'

NOTES:

1. SEE PLATE 01 FOR GENERAL PROJECT INFORMATION
2. THE HORIZONTAL DISTANCES ARE IN FEET AND FOLLOW FDEP RANGE MONUMENT AZIMUTH.

US Army Corps of Engineers © Jacksonville District	**NOT FOR CONSTRUCTION PERMIT DRAWINGS**	HURRICANE STORM DAMAGE REDUCTION PROJECT SARASOTA COUNTY, FLORIDA	DATE	DESIGNED	APPROVED	DATE: MAR. 2014
	DEPARTMENT OF THE ARMY	**LIDO KEY BEACH EROSION CONTROL PROJECT**	2/26/15	J.W.L.	L.R.P.	DWN BY: J.W.L.
	JACKSONVILLE DISTRICT, CORPS OF ENGINEERS JACKSONVILLE, FLORIDA	**BEACH FILL - PROFILE VIEW**	9/03/15	J.W.L.	J.E.B.	PLATE: 12 OF 34

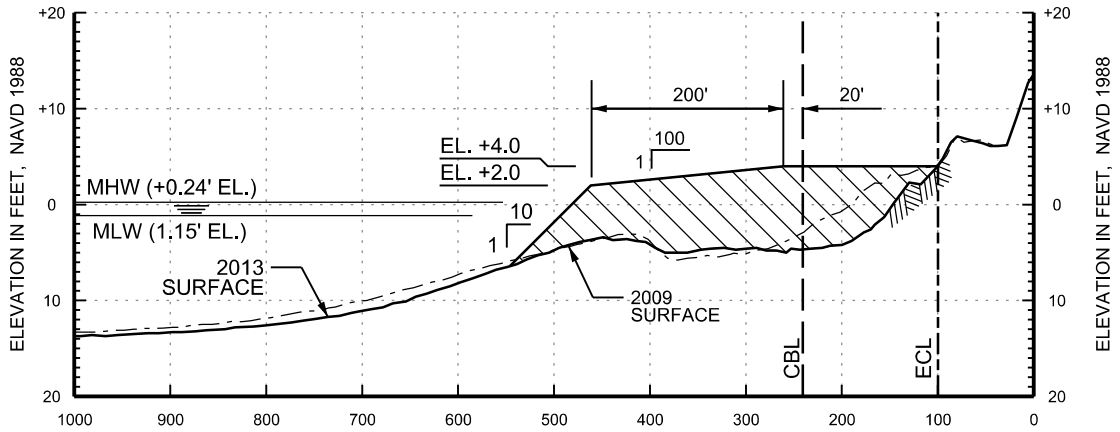

R-42

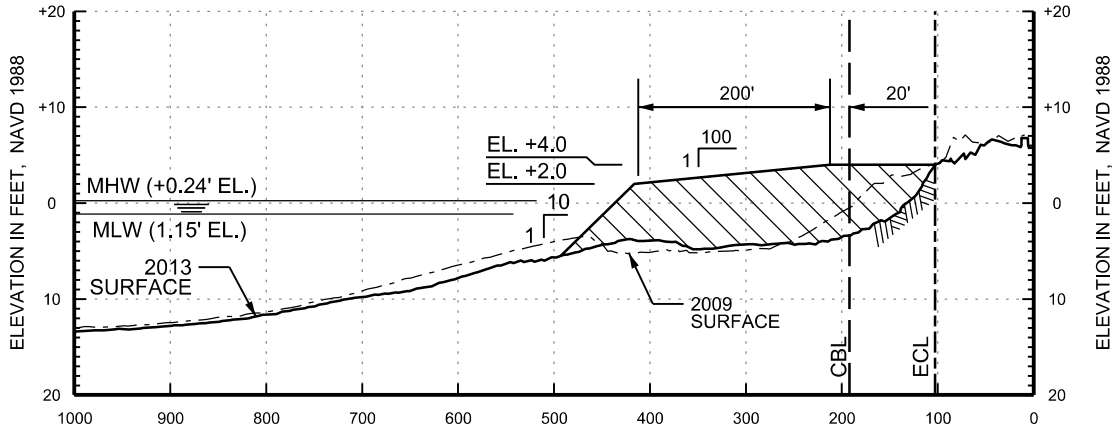

R-42-25

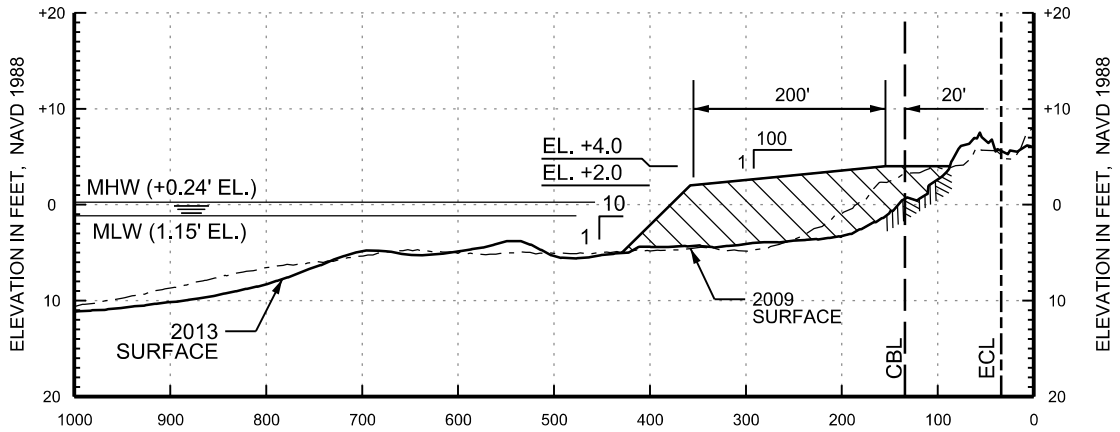

R-42-5

GRAPHIC SCALES

NOTES:

1. SEE PLATE 01 FOR GENERAL PROJECT INFORMATION
2. THE HORIZONTAL DISTANCES ARE IN FEET AND FOLLOW FDEP RANGE MONUMENT AZIMUTH.

US Army Corps of Engineers © Jacksonville District	**NOT FOR CONSTRUCTION PERMIT DRAWINGS**	HURRICANE STORM DAMAGE REDUCTION PROJECT SARASOTA COUNTY, FLORIDA	DATE	DESIGNED	APPROVED	DATE: MAR. 2014
	DEPARTMENT OF THE ARMY	**LIDO KEY BEACH EROSION CONTROL PROJECT**	2/26/15	J.W.L.	L.R.P.	DWN BY: J.W.L.
	JACKSONVILLE DISTRICT, CORPS OF ENGINEERS JACKSONVILLE, FLORIDA	**BEACH FILL - PROFILE VIEW**	9/03/15	J.W.L.	J.E.B.	PLATE: 13 OF 34

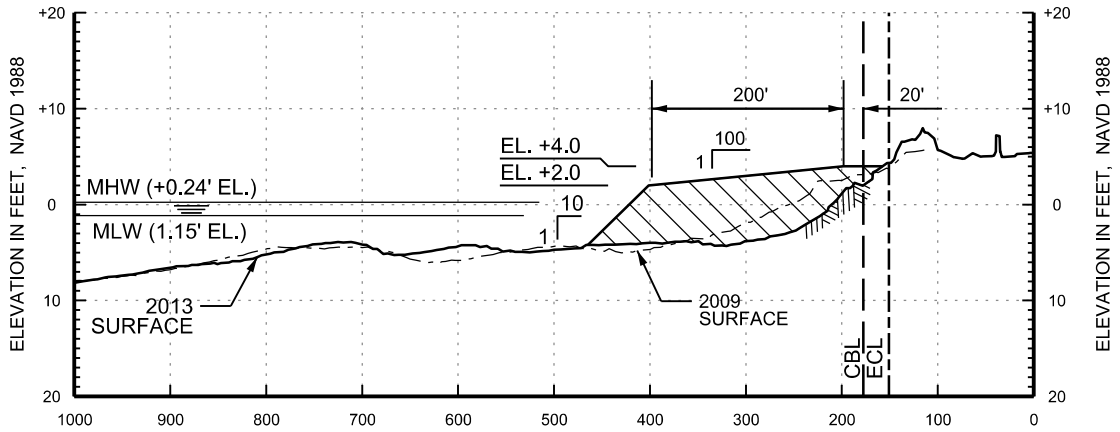

R-42-75

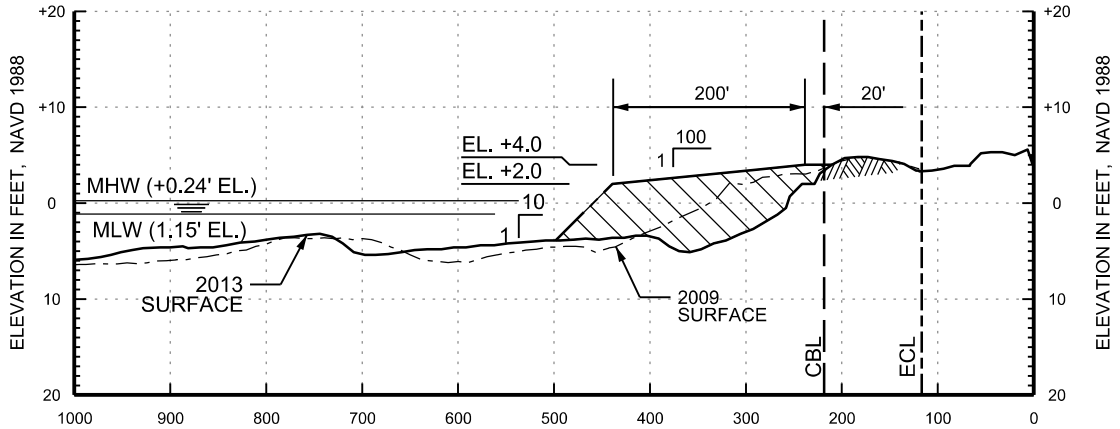

R-43

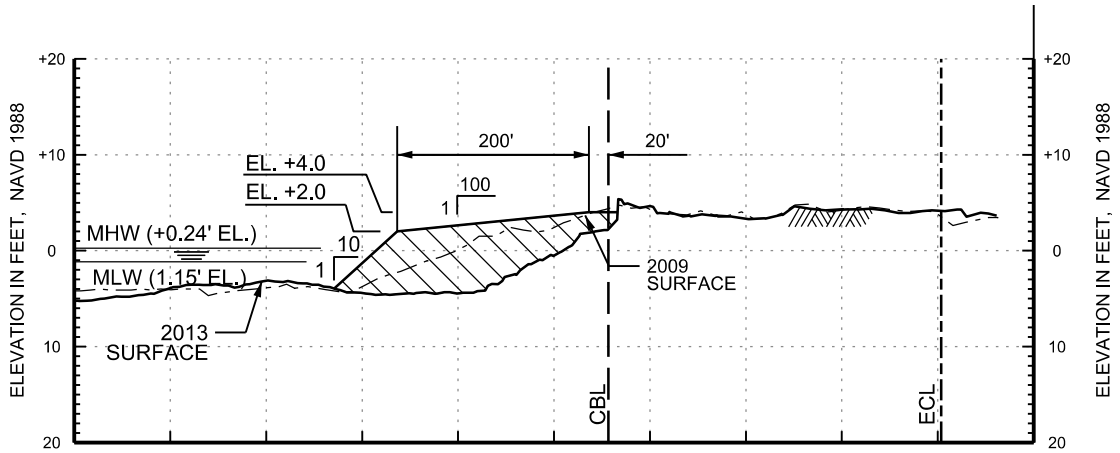

R-43-5

GRAPHIC SCALES

HORIZONTAL: 200' 0 200'

VERTICAL: 20' 0 20'

NOTES:

1. SEE PLATE 01 FOR GENERAL PROJECT INFORMATION
2. THE HORIZONTAL DISTANCES ARE IN FEET AND FOLLOW FDEP RANGE MONUMENT AZIMUTH.

US Army Corps of Engineers © Jacksonville District	**NOT FOR CONSTRUCTION PERMIT DRAWINGS**	HURRICANE STORM DAMAGE REDUCTION PROJECT SARASOTA COUNTY, FLORIDA	DATE	DESIGNED	APPROVED	DATE: MAR. 2014
	DEPARTMENT OF THE ARMY	**LIDO KEY BEACH EROSION CONTROL PROJECT**	2/26/15	J.W.L.	L.R.P.	DWN BY: J.W.L.
	JACKSONVILLE DISTRICT, CORPS OF ENGINEERS JACKSONVILLE, FLORIDA	**BEACH FILL - PROFILE VIEW**	9/03/15	J.W.L.	J.E.B.	PLATE: 14 OF 34

BORROW AREA SURVEY NOTES:

1. BORROW AREA SURVEY 13-153 WAS PERFORMED BY USACE B/N 24 JULY 2013 TO 8 AUGUST 2013 .
2. ALL ELEVATIONS ARE BELOW THE CHART DATUM UNLESS PRECEDED BY A (+) SIGN.
3. PLANE COORDINATES ARE BASED ON THE TRANSVERSE MERCATOR PROJECTION FOR THE WEST ZONE OF FLORIDA AND REFERENCED TO THE NORTH AMERICAN DATUM OF 1983, REALIZATION OF 2007 (NAD83 (2007)).
4. DEPTHS DEPICTED BY THIS SURVEY ARE REFERENCED TO THE NORTH AMERICAN VERTICAL DATUM OF 1988 (NAVD88). VERTICAL MEASURMENTS WERE MADE USING A ROSS SMARTSOUNDER DUAL FREQUENCY 28/200 KHZ SINGLE BEAM TRANSDUCER.
5. THIS SURVEY WAS PERFORMED USING REAL-TIME KINEMATIC GPS POSITIONING WITH THE FOLLOWING REFERENCE BASE LOCATIONS:
   * REFERENCE BASE LOCATED AT "IWSA 96"
   * TIDE STAFF SET FROM "6083 B TIDAL"

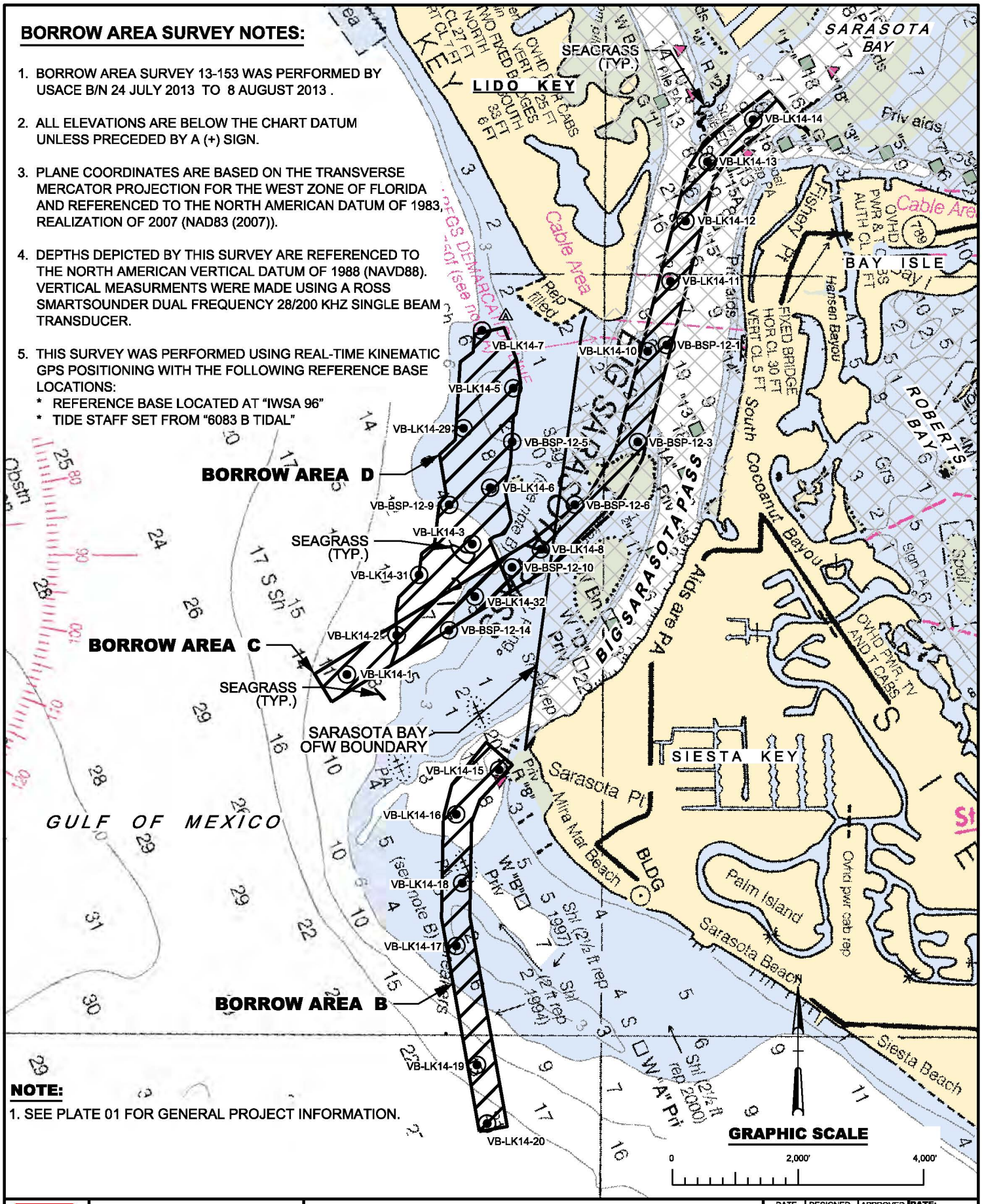

NOTE:

1. SEE PLATE 01 FOR GENERAL PROJECT INFORMATION.

US Army Corps of Engineers® Jacksonville District	NOT FOR CONSTRUCTION PERMIT DRAWINGS DEPARTMENT OF THE ARMY JACKSONVILLE DISTRICT, CORPS OF ENGINEERS JACKSONVILLE, FLORIDA	HURRICANE STORM DAMAGE REDUCTION PROJECT SARASOTA COUNTY, FLORIDA **LIDO KEY BEACH EROSION CONTROL PROJECT** **BORROW AREAS - OVERALL PLAN**	DATE 2/26/15 9/03/15	DESIGNED J.W.L. J.W.L.	APPROVED L.R.P. J.E.B.	DATE: MAR. 2014 DWN BY: J.W.L. PLATE: 15 OF 34

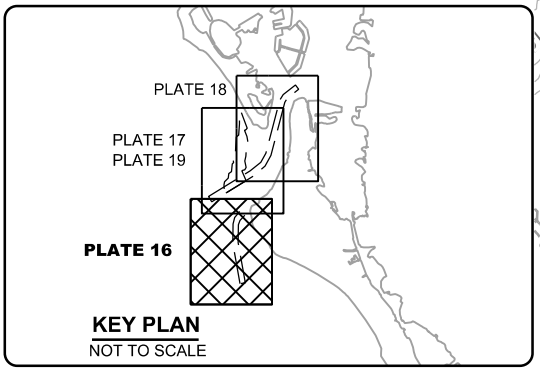

MAG HIT ID	EASTING	NORTHING
A27	470,391	1,065,182
M103	469,372	1,071,062
M116	469,364	1,070,366
T10	470,060	1,071,615
T12	470,556	1,071,470
T14	469,389	1,070,829
T15	469,405	1,070,686

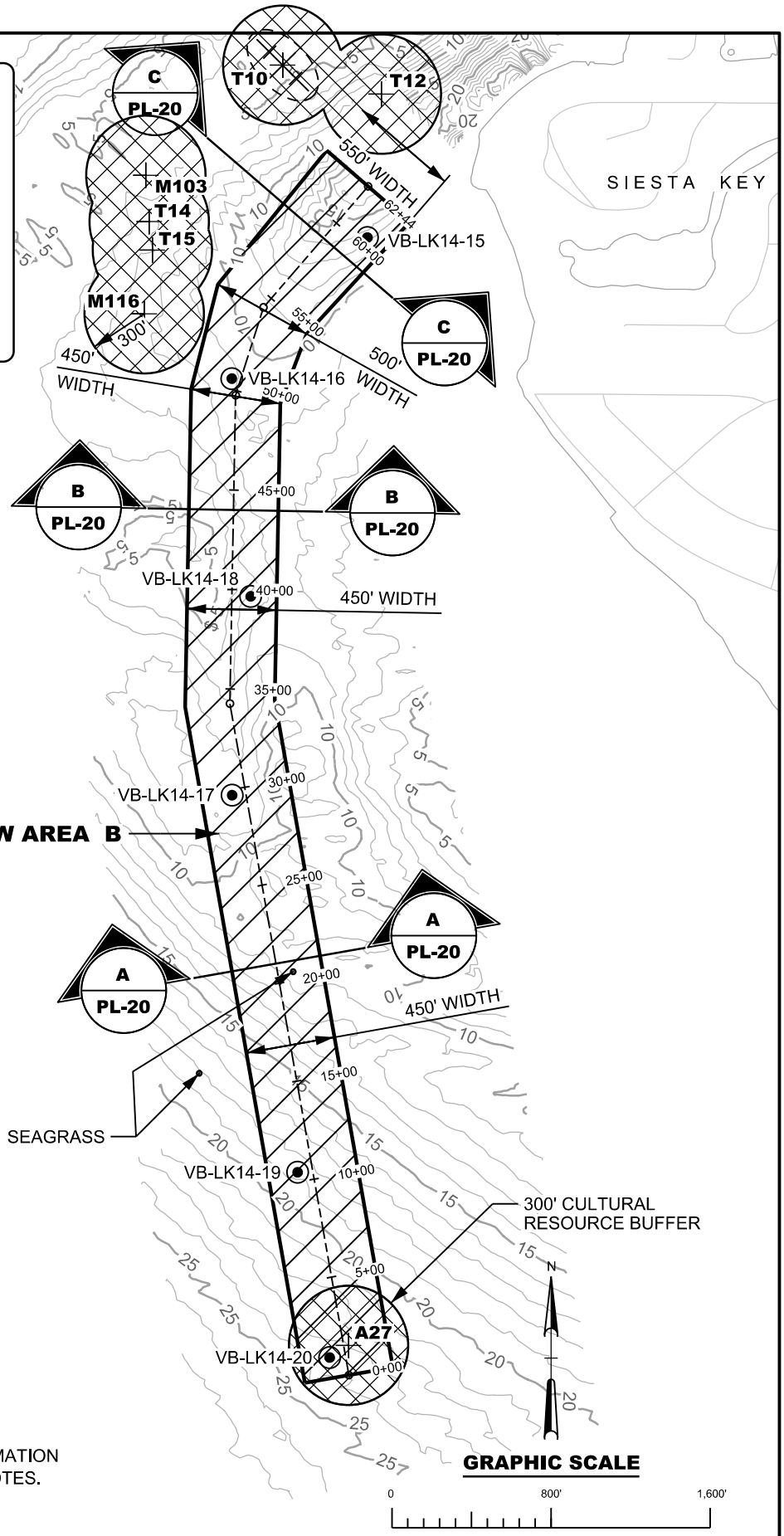

NOTES:

1. SEE PLATE 01 FOR GENERAL PROJECT INFORMATION
2. SEE PLATE 15 FOR BORROW AREA SURVEY NOTES.

US Army Corps of Engineers © Jacksonville District

NOT FOR CONSTRUCTION PERMIT DRAWINGS

DEPARTMENT OF THE ARMY
JACKSONVILLE DISTRICT, CORPS OF ENGINEERS
JACKSONVILLE, FLORIDA

HURRICANE STORM DAMAGE REDUCTION PROJECT
SARASOTA COUNTY, FLORIDA

LIDO KEY BEACH EROSION CONTROL PROJECT

BORROW AREA B - PLAN VIEW

DATE	DESIGNED	APPROVED
2/26/15	J.W.L.	L.R.P.
9/03/15	J.W.L.	J.E.B.
7/15/16	J.W.L.	J.E.B.

DATE: MAR. 2014
DWN BY: J.W.L.
PLATE: 16 OF 34

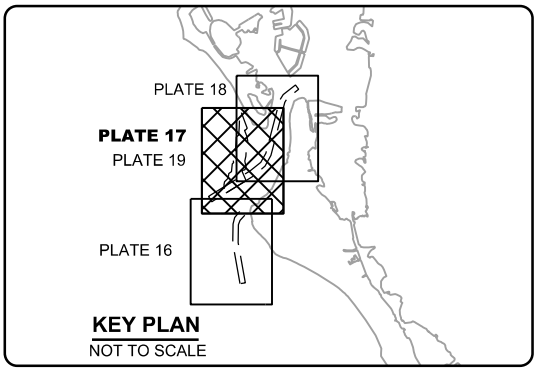

NOTES:

1. SEE PLATE 01 FOR GENERAL PROJECT INFORMATION
2. SEE PLATE 15 FOR BORROW AREA SURVEY NOTES.

MAG HIT ID	EASTING	NORTHING
T9	469,612	1,072,699

SARASOTA BAY OFW BOUNDARY

LIDO KEY

MATCHLINE PLATE 18 STA. 70+00

GULF OF MEXICO

BORROW AREA D

SEAGRASS

300' CULTURAL RESOURCE BUFFER

BORROW AREA C

T9 300'

T10 300' CULTURAL BUFFER

520' WIDTH

450' WIDTH

450'

520'

TRANSITION

BIG SARASOTA PASS

SIESTA KEY

VB-LK14-7, VB-LK14-5, VB-LK14-29, VB-BSP-12-5, VB-BSP-12-3, VB-LK14-6, VB-BSP-12-9, VB-BSP-12-6, VB-LK14-3, VB-LK14-8, VB-LK14-31, VB-BSP-12-10, VB-LK14-32, VB-BSP-12-14, VB-LK14-2, VB-LK14-1

D PL-21, E PL-21

0+00, 5+00, 10+00, 15+00, 20+00, 25+00, 30+00, 35+00, 40+00, 45+00, 50+00, 55+00, 60+00, 65+00

GRAPHIC SCALE

0 800' 1,600'

US Army Corps of Engineers © Jacksonville District

NOT FOR CONSTRUCTION PERMIT DRAWINGS

DEPARTMENT OF THE ARMY
JACKSONVILLE DISTRICT, CORPS OF ENGINEERS
JACKSONVILLE, FLORIDA

HURRICANE STORM DAMAGE REDUCTION PROJECT
SARASOTA COUNTY, FLORIDA

LIDO KEY BEACH EROSION CONTROL PROJECT

BORROW AREA C - PLAN VIEW

DATE	DESIGNED	APPROVED
2/26/15	J.W.L.	L.R.P.
9/03/15	J.W.L.	J.E.B.
7/15/16	J.W.L.	J.E.B.

DATE: MAR. 2014
DWN BY: J.W.L.
PLATE: 17 OF 34

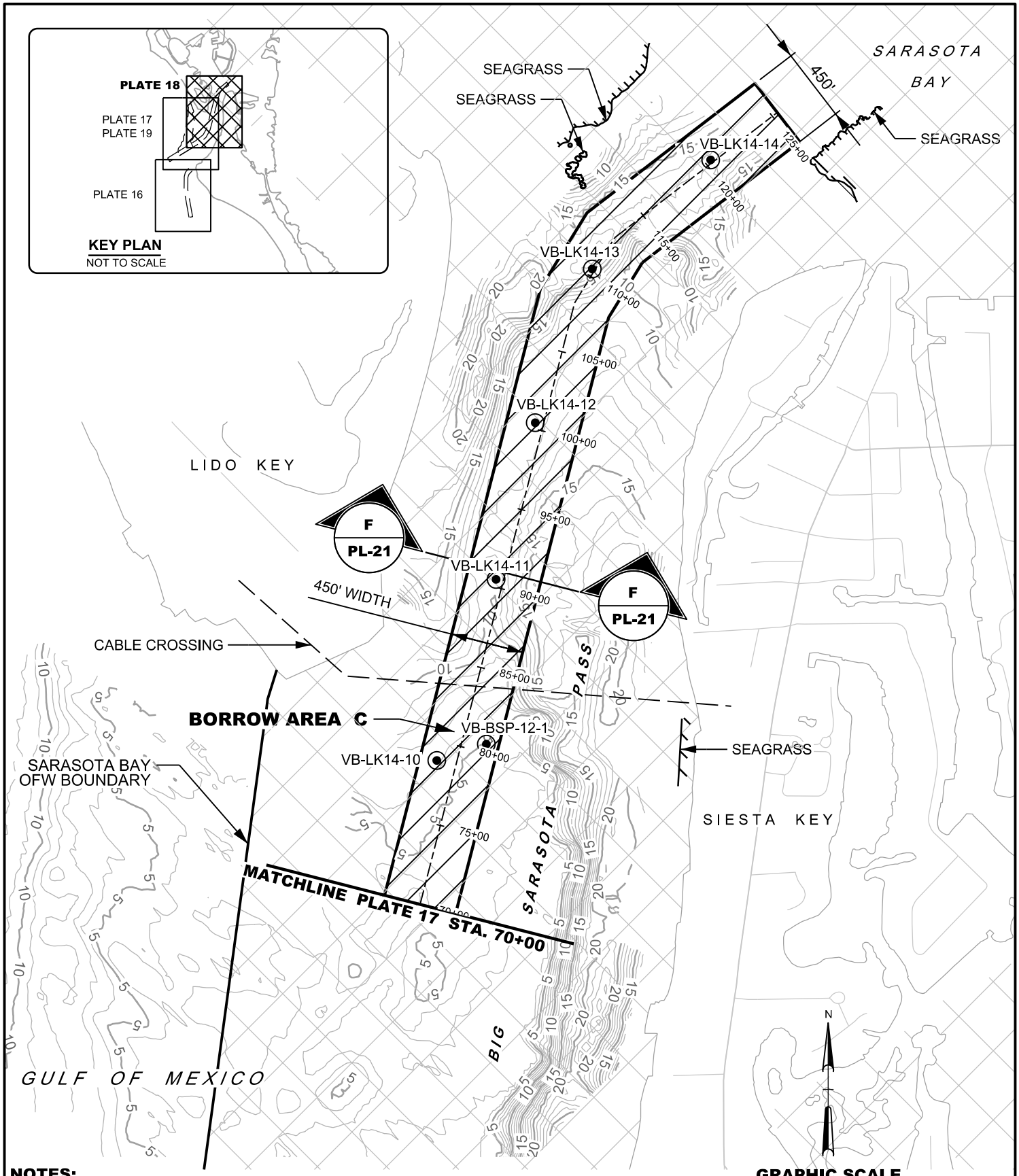

NOTES:

1. SEE PLATE 01 FOR GENERAL PROJECT INFORMATION
2. SEE PLATE 15 FOR BORROW AREA SURVEY NOTES.

GRAPHIC SCALE

0 800' 1,600'

US Army Corps of Engineers © Jacksonville District

NOT FOR CONSTRUCTION PERMIT DRAWINGS

DEPARTMENT OF THE ARMY
JACKSONVILLE DISTRICT, CORPS OF ENGINEERS
JACKSONVILLE, FLORIDA

HURRICANE STORM DAMAGE REDUCTION PROJECT
SARASOTA COUNTY, FLORIDA

LIDO KEY BEACH EROSION CONTROL PROJECT

BORROW AREA C - PLAN VIEW

DATE	DESIGNED	APPROVED
2/26/15	J.W.L.	L.R.P.
9/03/15	J.W.L.	J.E.B.
7/15/16	J.W.L.	J.E.B.

DATE: MAR. 2014
DWN BY: J.W.L.
PLATE: 18 OF 34

NOTES:

1. SEE PLATE 01 FOR GENERAL PROJECT INFORMATION
2. SEE PLATE 15 FOR BORROW AREA SURVEY NOTES.

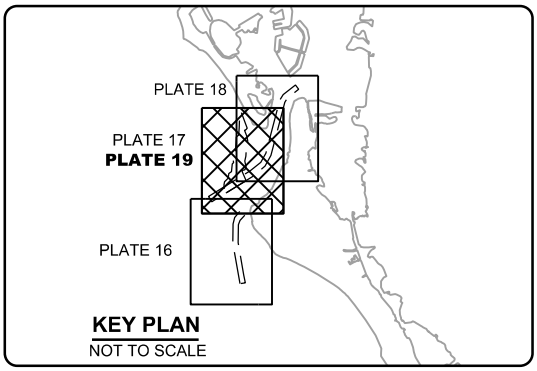

KEY PLAN
NOT TO SCALE

MAG HIT ID	EASTING	NORTHING
T9	469,612	1,072,699

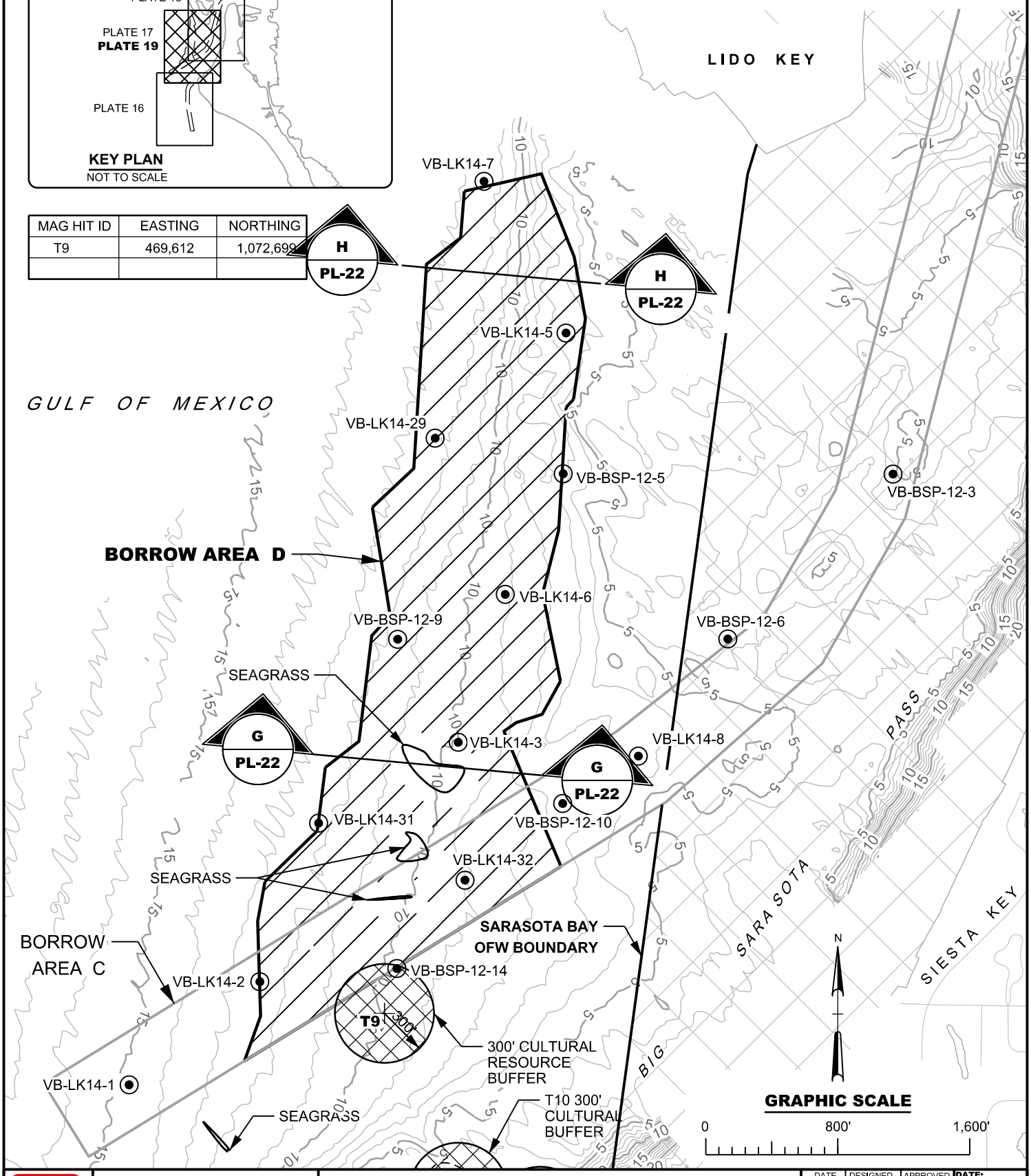

US Army Corps of Engineers ©
Jacksonville District

NOT FOR CONSTRUCTION PERMIT DRAWINGS

DEPARTMENT OF THE ARMY
JACKSONVILLE DISTRICT, CORPS OF ENGINEERS
JACKSONVILLE, FLORIDA

HURRICANE STORM DAMAGE REDUCTION PROJECT
SARASOTA COUNTY, FLORIDA

LIDO KEY BEACH EROSION CONTROL PROJECT

BORROW AREA D - PLAN VIEW

DATE	DESIGNED	APPROVED
2/26/15	J.W.L.	L.R.P.
9/03/15	J.W.L.	J.E.B.
7/15/16	J.W.L.	J.E.B.

DATE: MAR. 2014
DWN BY: J.W.L.
PLATE: 19 OF 34

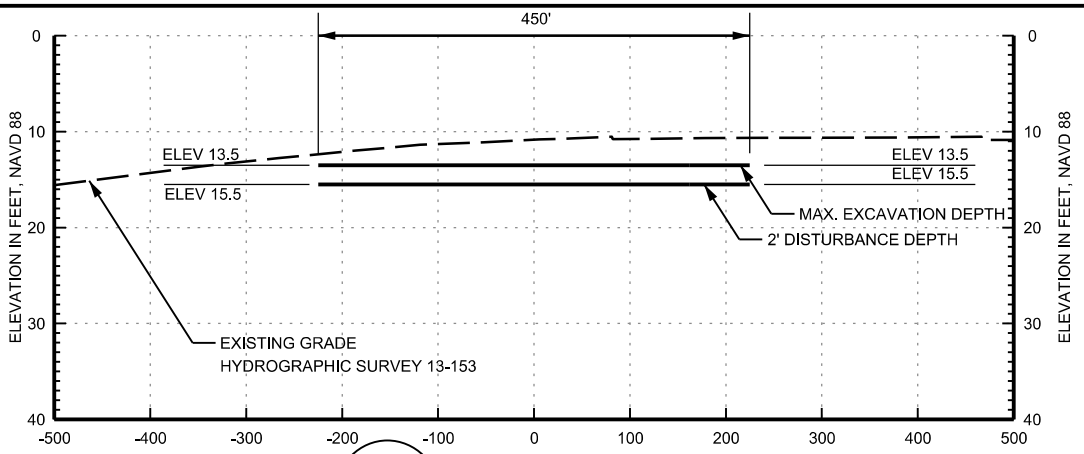

A
PL-16

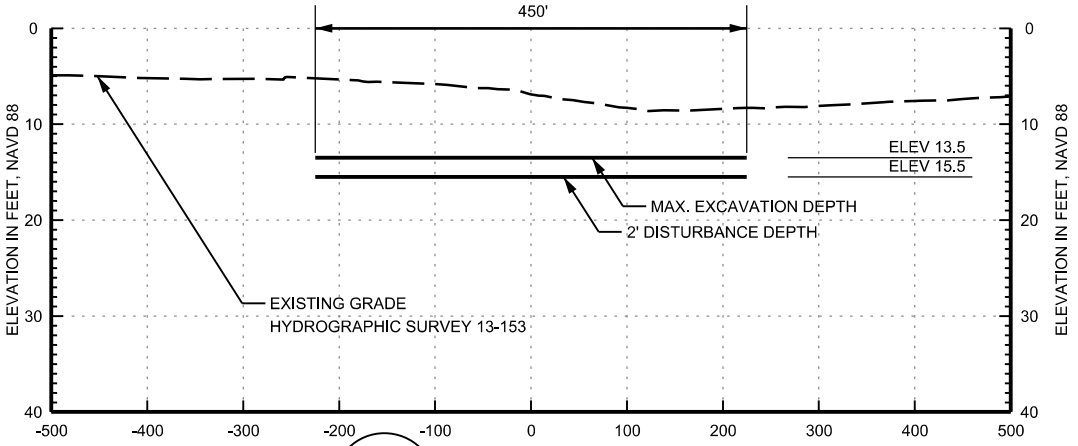

B
PL-16

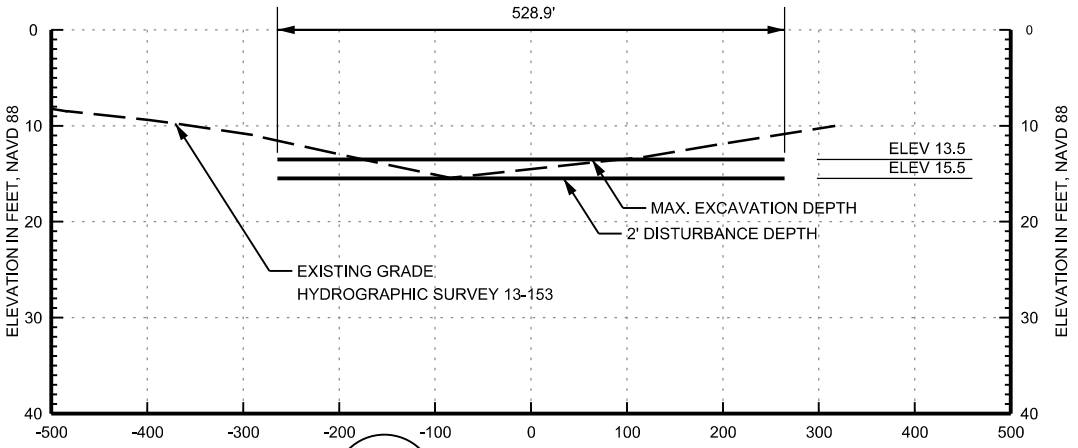

C
PL-16

GRAPHIC SCALES

HORIZONTAL 0 200' 400'

VERTICAL 0 20' 40'

NOTE:

1. SEE PLATE 01 FOR GENERAL PROJECT INFORMATION.

US Army Corps of Engineers © Jacksonville District	**NOT FOR CONSTRUCTION PERMIT DRAWINGS**	HURRICANE STORM DAMAGE REDUCTION PROJECT SARASOTA COUNTY, FLORIDA	DATE	DESIGNED	APPROVED	DATE: MAR. 2014	
	DEPARTMENT OF THE ARMY	**LIDO KEY BEACH EROSION CONTROL PROJECT**	2/26/15	J.W.L.	L.R.P.	DWN BY: J.W.L.	
	JACKSONVILLE DISTRICT, CORPS OF ENGINEERS JACKSONVILLE, FLORIDA	**BORROW AREA B - CROSS SECTIONS**	9/03/15	J.W.L.	J.E.B.		
			6/10/16	J.W.L.	J.E.B.	PLATE: 20 OF 34	

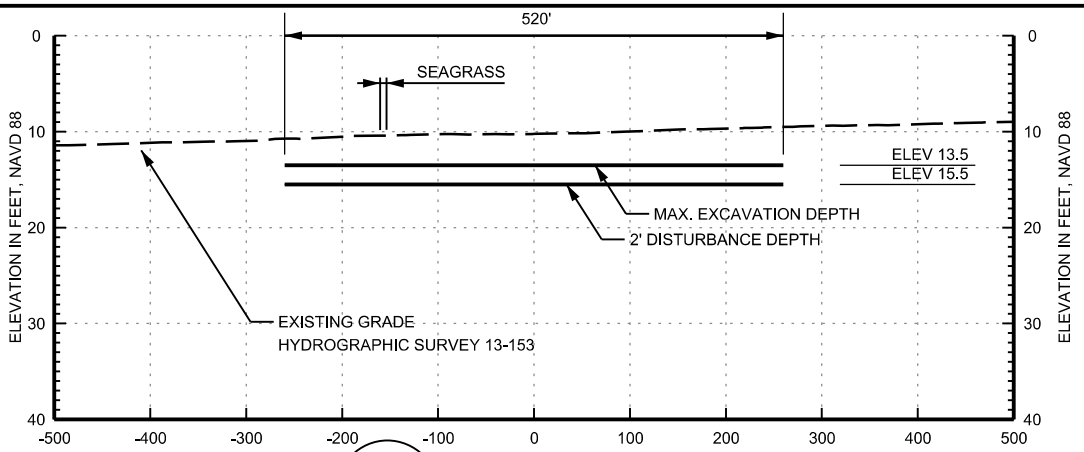

D
PL-17

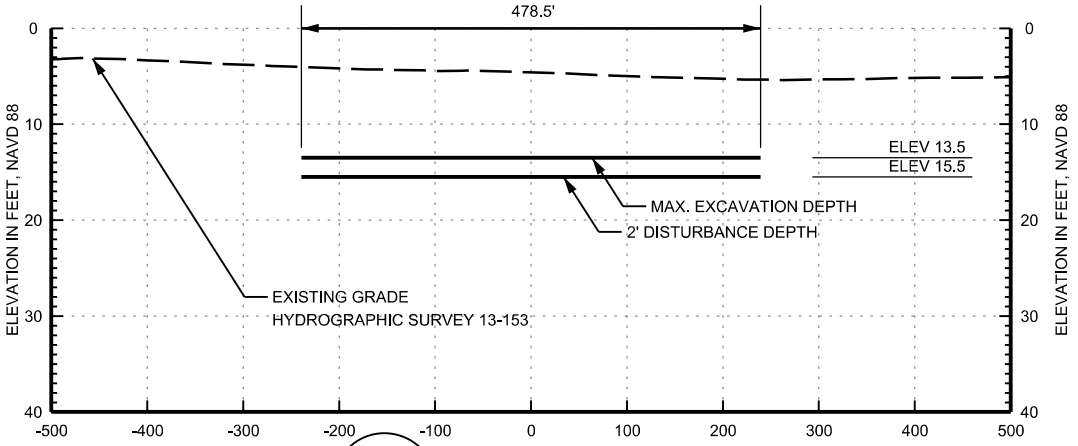

E
PL-17

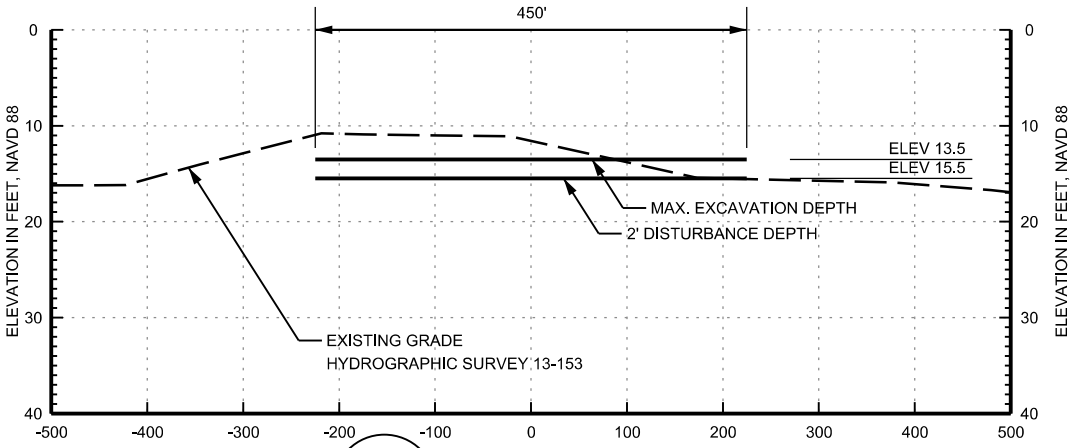

F
PL-18

GRAPHIC SCALES

HORIZONTAL 0 200' 400'

VERTICAL 0 20' 40'

NOTE:

1. SEE PLATE 01 FOR GENERAL PROJECT INFORMATION.

US Army Corps of Engineers © Jacksonville District

NOT FOR CONSTRUCTION PERMIT DRAWINGS

DEPARTMENT OF THE ARMY
JACKSONVILLE DISTRICT, CORPS OF ENGINEERS
JACKSONVILLE, FLORIDA

HURRICANE STORM DAMAGE REDUCTION PROJECT
SARASOTA COUNTY, FLORIDA

LIDO KEY BEACH EROSION CONTROL PROJECT

BORROW AREA C - CROSS SECTIONS

DATE	DESIGNED	APPROVED
2/26/15	J.W.L.	L.R.P.
9/03/15	J.W.L.	J.E.B.
6/10/16	J.W.L.	J.E.B.

DATE: MAR. 2014
DWN BY: J.W.L.
PLATE: 21 OF 34

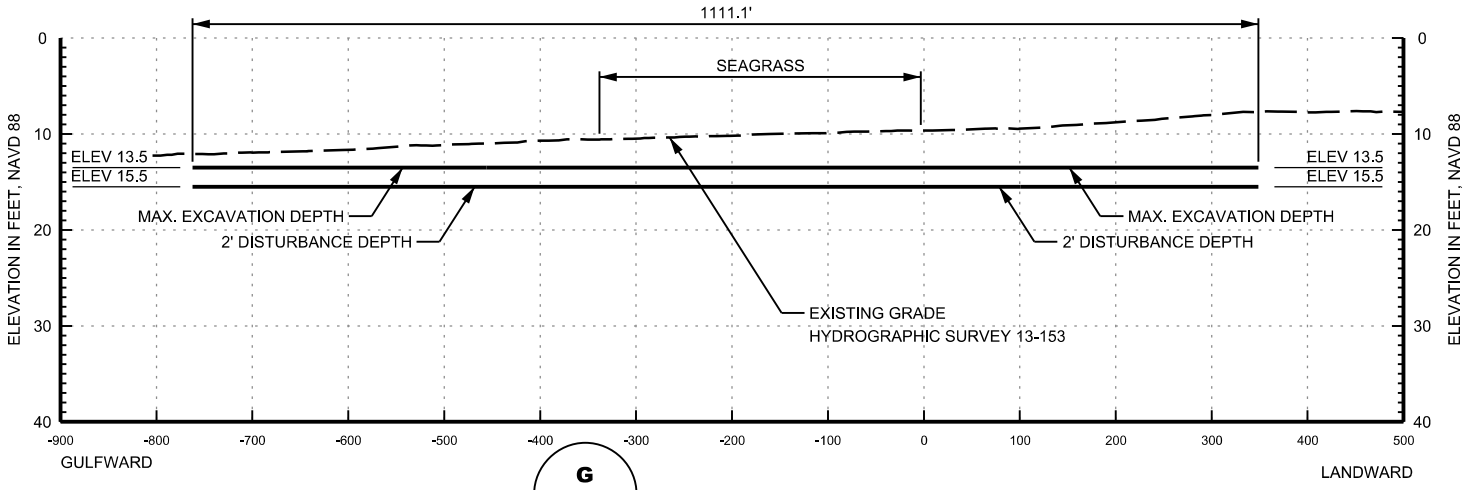

G
PL-19

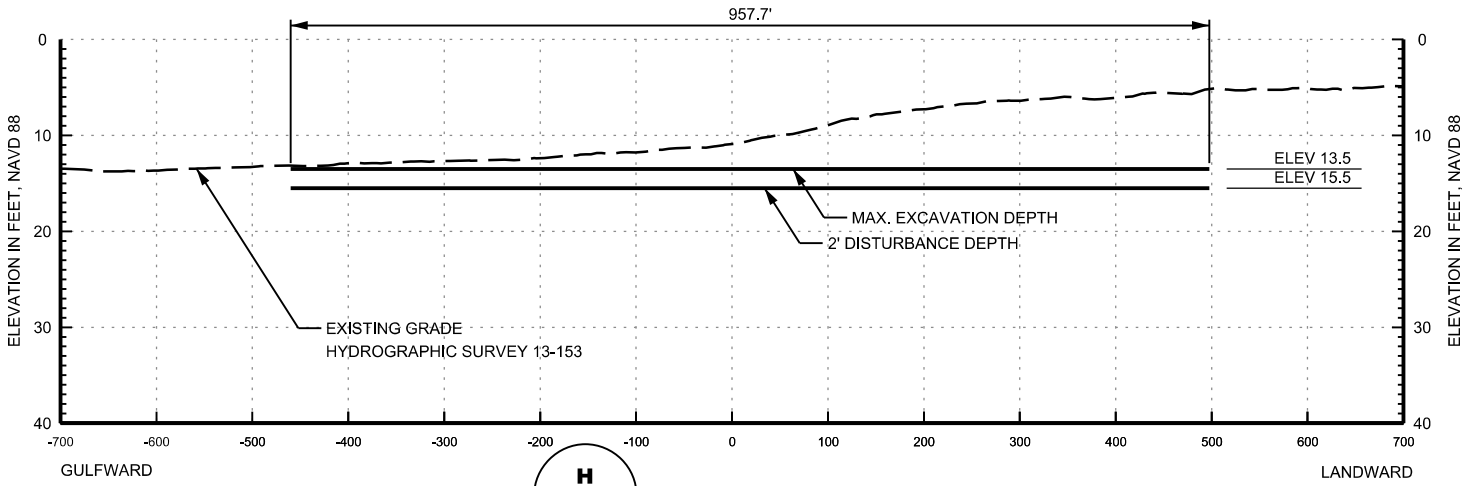

H
PL-19

GRAPHIC SCALES

HORIZONTAL 0 200' 400'

VERTICAL 0 20' 40'

NOTE:

1. SEE PLATE 01 FOR GENERAL PROJECT INFORMATION.

US Army Corps of Engineers © Jacksonville District	**NOT FOR CONSTRUCTION PERMIT DRAWINGS**	HURRICANE STORM DAMAGE REDUCTION PROJECT SARASOTA COUNTY, FLORIDA	DATE	DESIGNED	APPROVED	DATE: MAR. 2014
	DEPARTMENT OF THE ARMY	**LIDO KEY BEACH EROSION CONTROL PROJECT**	2/26/15	J.W.L.	L.R.P.	DWN BY: J.W.L.
	JACKSONVILLE DISTRICT, CORPS OF ENGINEERS JACKSONVILLE, FLORIDA	**BORROW AREA D - CROSS SECTIONS**	9/03/15	J.W.L.	J.E.B.	PLATE: 22 OF 34
			6/10/16	J.W.L.	J.E.B.	

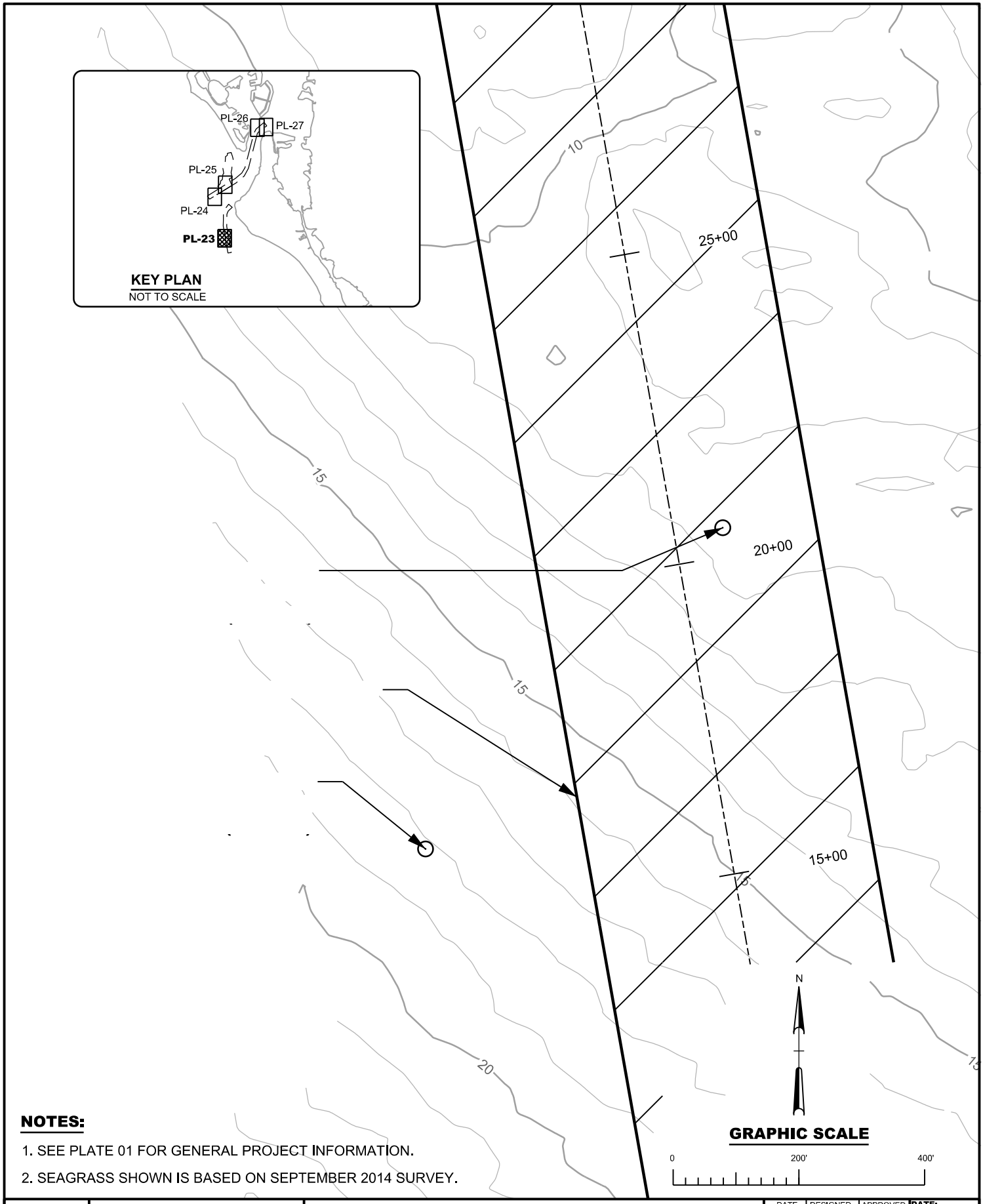

NOTES:

1. SEE PLATE 01 FOR GENERAL PROJECT INFORMATION.
2. SEAGRASS SHOWN IS BASED ON SEPTEMBER 2014 SURVEY.

US Army Corps of Engineers ©
Jacksonville District

NOT FOR CONSTRUCTION PERMIT DRAWINGS

DEPARTMENT OF THE ARMY
JACKSONVILLE DISTRICT, CORPS OF ENGINEERS
JACKSONVILLE, FLORIDA

HURRICANE STORM DAMAGE REDUCTION PROJECT
SARASOTA COUNTY, FLORIDA

LIDO KEY BEACH EROSION CONTROL PROJECT

SEAGRASS - BORROW AREA B - PLAN VIEW

DATE	DESIGNED	APPROVED
2/26/15	J.W.L.	L.R.P.
9/03/15	J.W.L.	J.E.B.
6/10/16	J.W.L.	J.E.B.

DATE: MAR. 2014
DWN BY: J.W.L.
PLATE: 23 OF 34

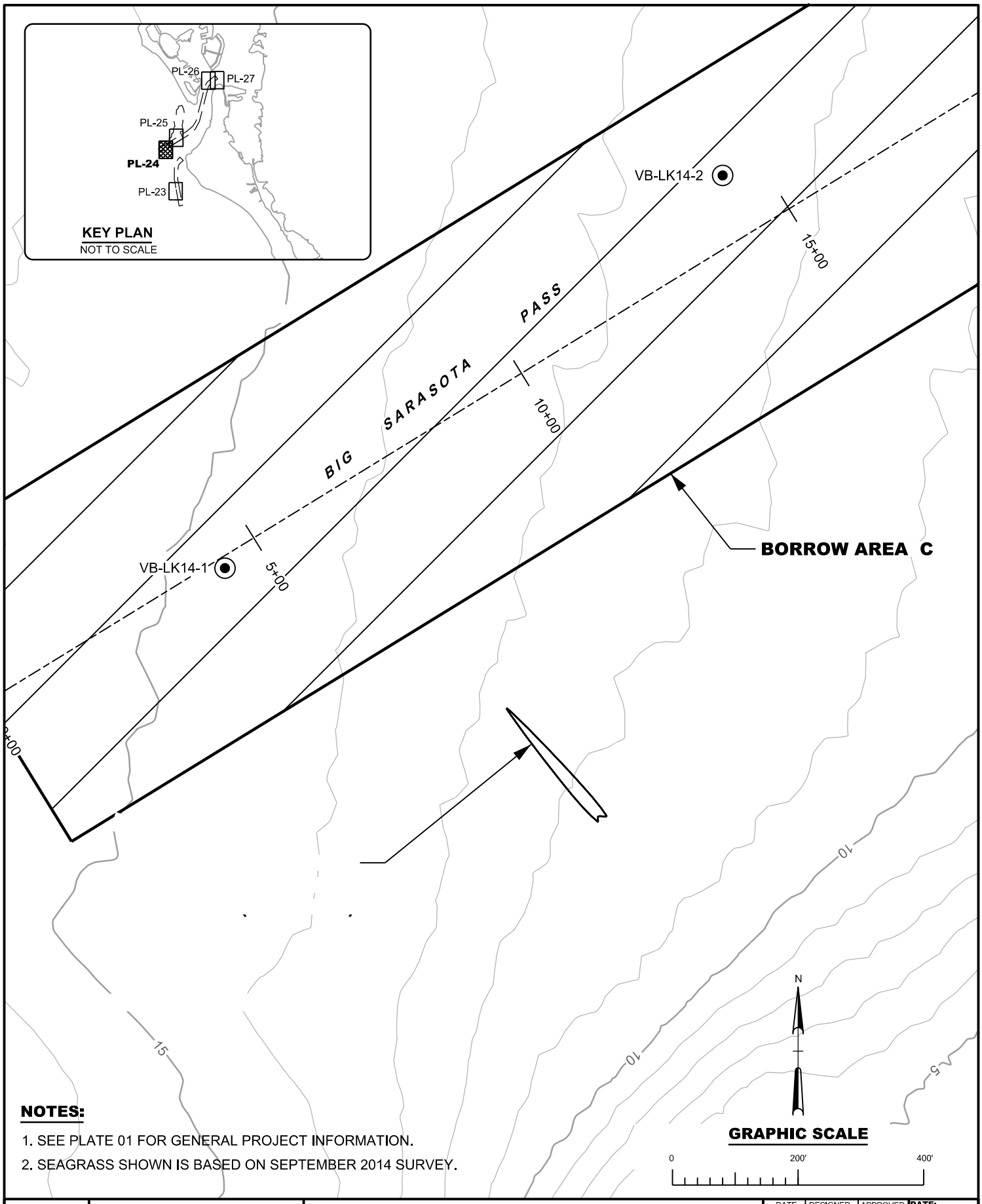

NOTES:

1. SEE PLATE 01 FOR GENERAL PROJECT INFORMATION.
2. SEAGRASS SHOWN IS BASED ON SEPTEMBER 2014 SURVEY.

US Army Corps of Engineers © Jacksonville District

NOT FOR CONSTRUCTION PERMIT DRAWINGS

DEPARTMENT OF THE ARMY
JACKSONVILLE DISTRICT, CORPS OF ENGINEERS
JACKSONVILLE, FLORIDA

HURRICANE STORM DAMAGE REDUCTION PROJECT
SARASOTA COUNTY, FLORIDA

LIDO KEY BEACH EROSION CONTROL PROJECT

SEAGRASS - BORROW AREA C - PLAN VIEW

DATE	DESIGNED	APPROVED
2/26/15	J.W.L.	L.R.P.
9/03/15	J.W.L.	J.E.B.
6/10/16	J.W.L.	J.E.B.

DATE: MAR. 2014
DWN BY: J.W.L.
PLATE: 24 OF 34

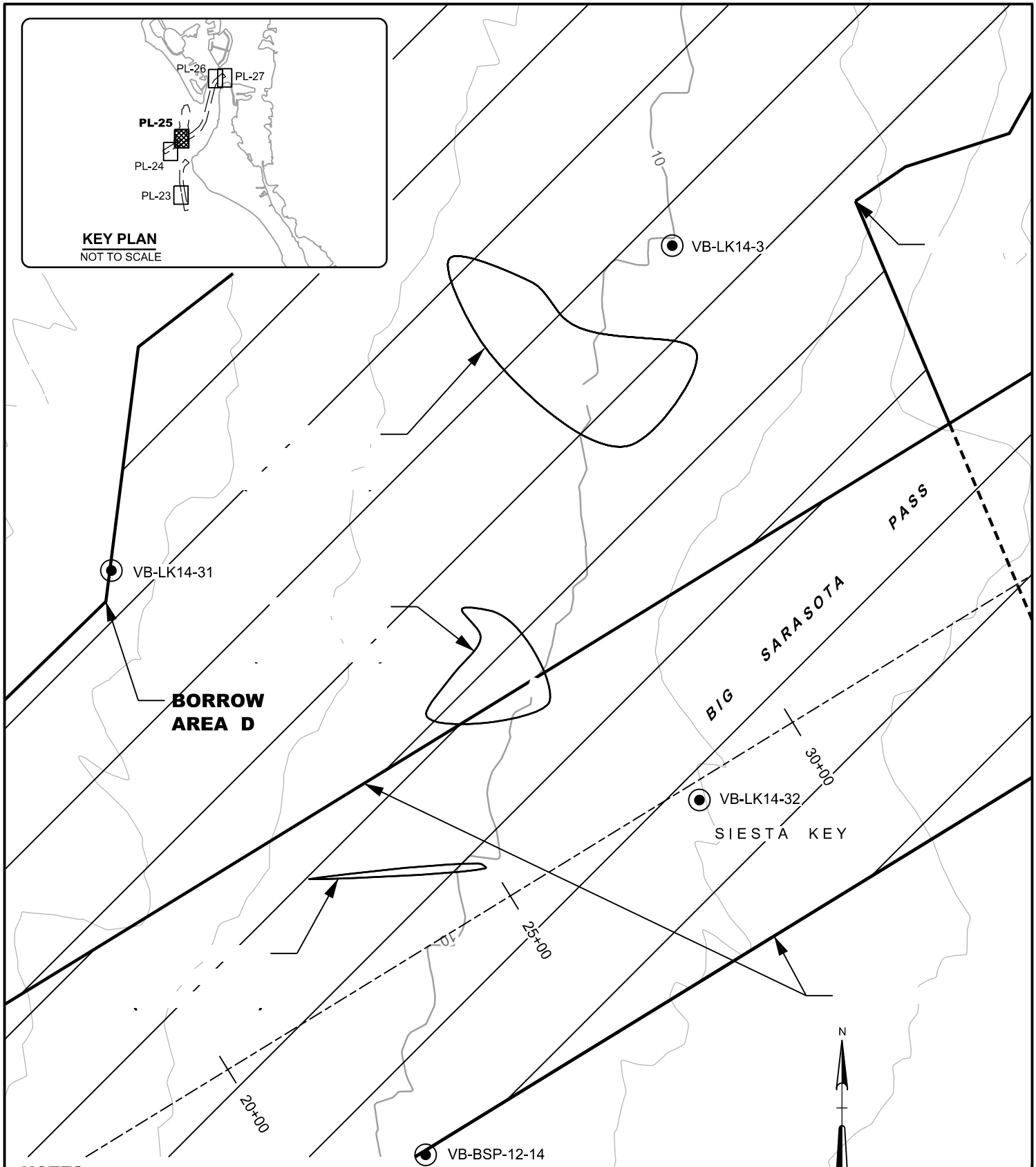

NOTES:

1. SEE PLATE 01 FOR GENERAL PROJECT INFORMATION.
2. SEAGRASS SHOWN IS BASED ON SEPTEMBER 2014 SURVEY.

US Army Corps of Engineers ©
Jacksonville District

NOT FOR CONSTRUCTION PERMIT DRAWINGS

DEPARTMENT OF THE ARMY
JACKSONVILLE DISTRICT, CORPS OF ENGINEERS
JACKSONVILLE, FLORIDA

HURRICANE STORM DAMAGE REDUCTION PROJECT
SARASOTA COUNTY, FLORIDA

LIDO KEY BEACH EROSION CONTROL PROJECT

SEAGRASS - BORROW AREAS C & D - PLAN VIEW

DATE	DESIGNED	APPROVED
2/26/15	J.W.L.	L.R.P.
9/03/15	J.W.L.	J.E.B.
6/10/16	J.W.L.	J.E.B.

DATE: MAR. 2014
DWN BY: J.W.L.
PLATE: 25 OF 34

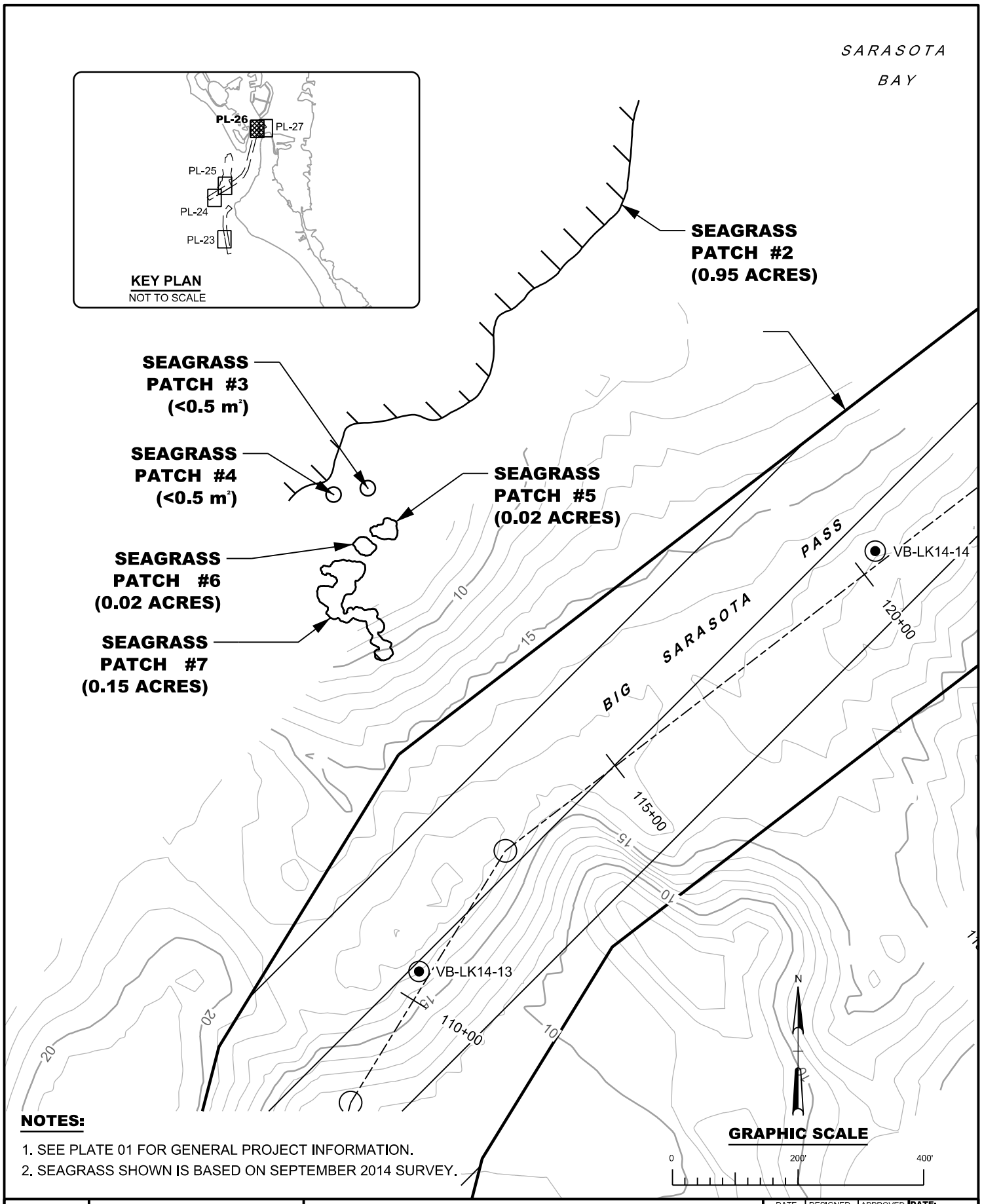

NOTES:

1. SEE PLATE 01 FOR GENERAL PROJECT INFORMATION.
2. SEAGRASS SHOWN IS BASED ON SEPTEMBER 2014 SURVEY.

US Army Corps of Engineers © Jacksonville District

NOT FOR CONSTRUCTION PERMIT DRAWINGS

DEPARTMENT OF THE ARMY
JACKSONVILLE DISTRICT, CORPS OF ENGINEERS
JACKSONVILLE, FLORIDA

HURRICANE STORM DAMAGE REDUCTION PROJECT
SARASOTA COUNTY, FLORIDA

LIDO KEY BEACH EROSION CONTROL PROJECT

SEAGRASS - BORROW AREA C - PLAN VIEW

DATE	DESIGNED	APPROVED
2/26/15	J.W.L.	L.R.P.
9/03/15	J.W.L.	J.E.B.
6/10/16	J.W.L.	J.E.B.

DATE: MAR. 2014
DWN BY: J.W.L.
PLATE: 26 OF 34

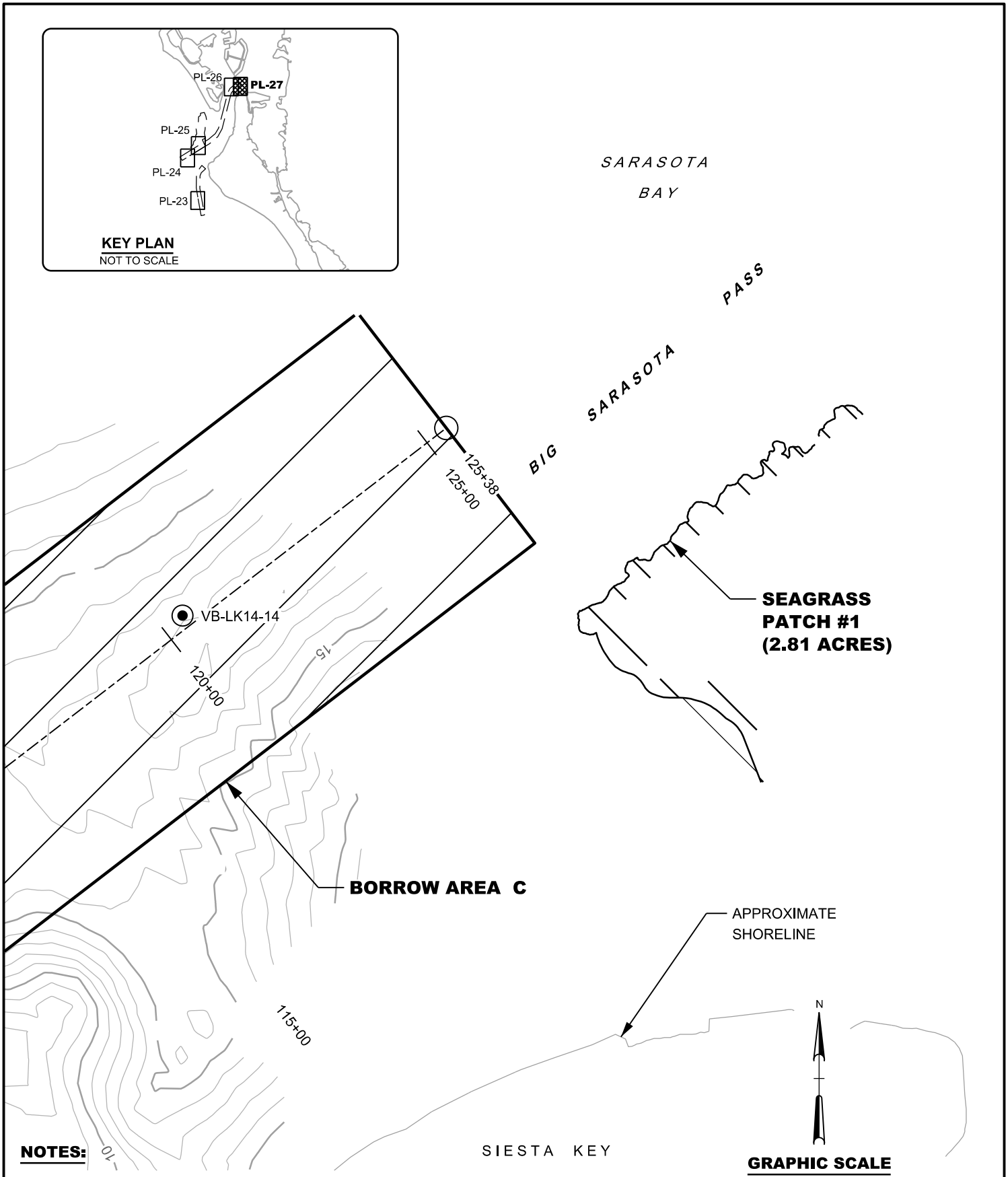

NOTES:

1. SEE PLATE 01 FOR GENERAL PROJECT INFORMATION.
2. SEAGRASS SHOWN IS BASED ON SEPTEMBER 2014 SURVEY.

US Army Corps of Engineers © Jacksonville District

NOT FOR CONSTRUCTION PERMIT DRAWINGS

DEPARTMENT OF THE ARMY
JACKSONVILLE DISTRICT, CORPS OF ENGINEERS
JACKSONVILLE, FLORIDA

HURRICANE STORM DAMAGE REDUCTION PROJECT
SARASOTA COUNTY, FLORIDA

LIDO KEY BEACH EROSION CONTROL PROJECT

SEAGRASS - BORROW AREA C - PLAN VIEW

DATE	DESIGNED	APPROVED
2/26/15	J.W.L.	L.R.P.
9/03/15	J.W.L.	J.E.B.
6/10/16	J.W.L.	J.E.B.

DATE: MAR. 2014
DWN BY: J.W.L.
PLATE: 27 OF 34

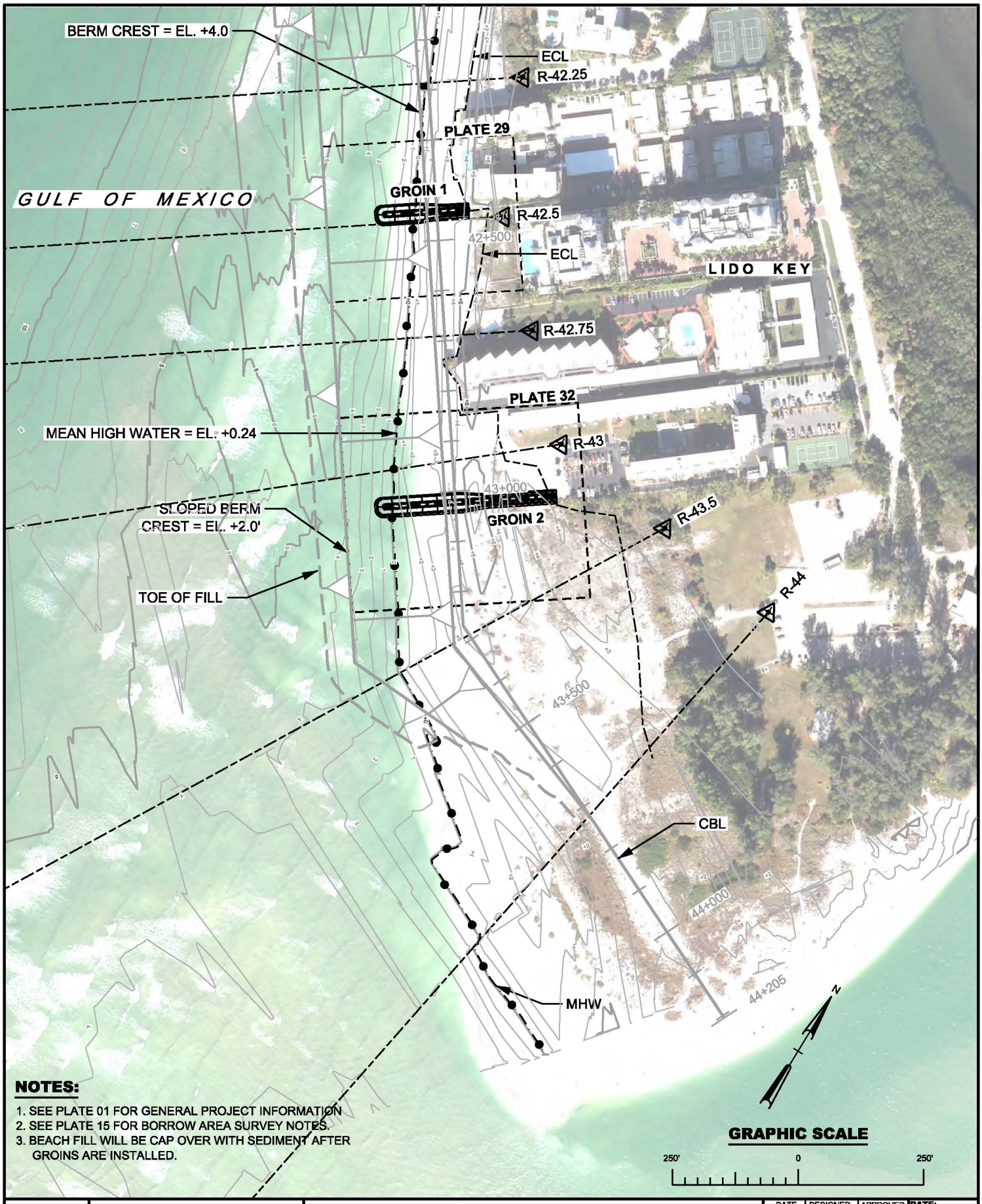

NOTES:

1. SEE PLATE 01 FOR GENERAL PROJECT INFORMATION
2. SEE PLATE 15 FOR BORROW AREA SURVEY NOTES.
3. BEACH FILL WILL BE CAP OVER WITH SEDIMENT AFTER GROINS ARE INSTALLED.

US Army Corps of Engineers® Jacksonville District	**NOT FOR CONSTRUCTION PERMIT DRAWINGS**	HURRICANE STORM DAMAGE REDUCTION PROJECT SARASOTA COUNTY, FLORIDA	DATE	DESIGNED	APPROVED	DATE: MAR. 2014
	DEPARTMENT OF THE ARMY	**LIDO KEY BEACH EROSION CONTROL PROJECT**	2/26/15	J.W.L.	L.R.P.	DWN BY: J.W.L.
	JACKSONVILLE DISTRICT, CORPS OF ENGINEERS JACKSONVILLE, FLORIDA	**GROIN OVERALL**	9/03/15	J.W.L.	J.E.B.	PLATE: 28 OF 34

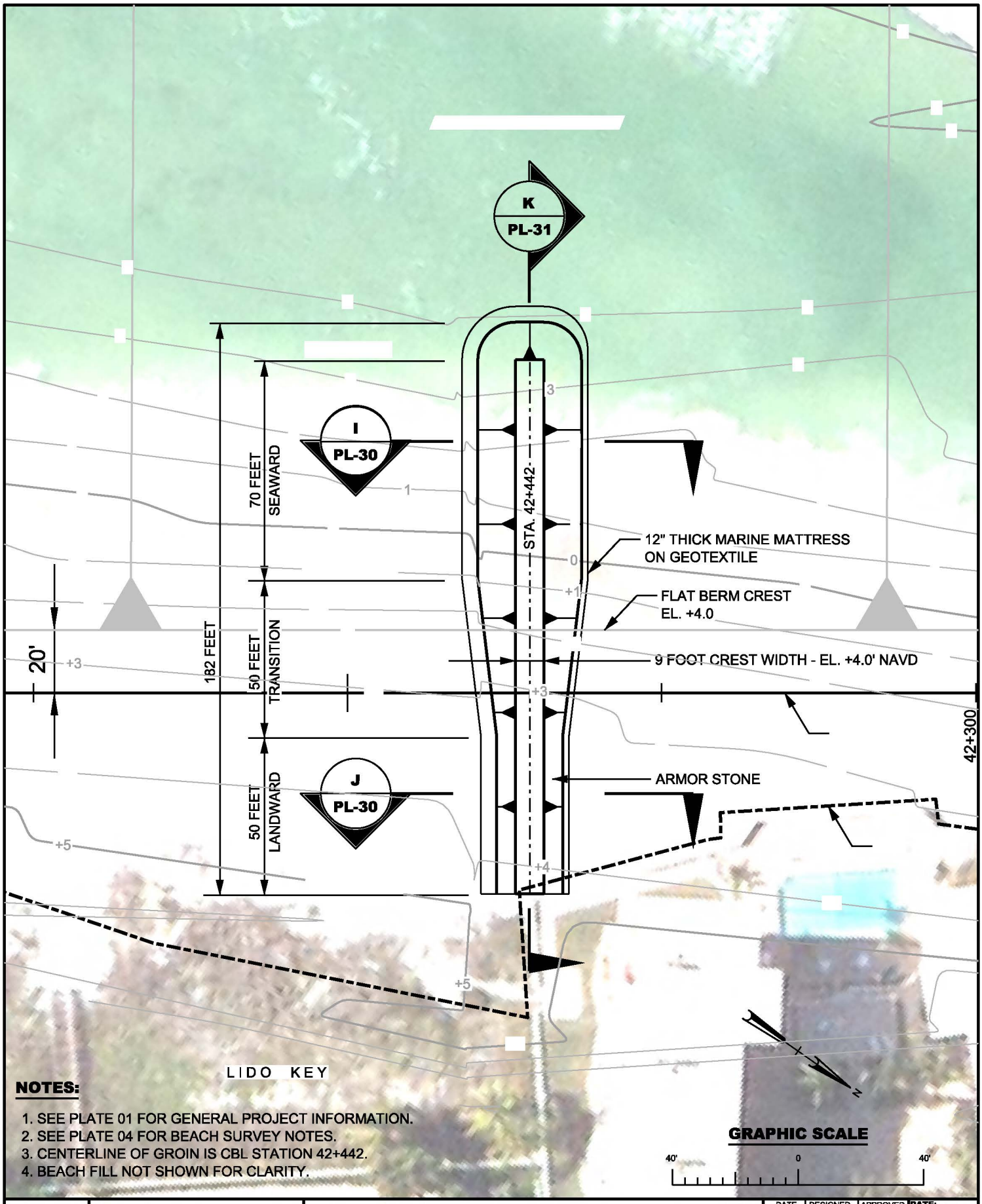

NOTES:

1. SEE PLATE 01 FOR GENERAL PROJECT INFORMATION.
2. SEE PLATE 04 FOR BEACH SURVEY NOTES.
3. CENTERLINE OF GROIN IS CBL STATION 42+442.
4. BEACH FILL NOT SHOWN FOR CLARITY.

US Army Corps of Engineers®
Jacksonville District

NOT FOR CONSTRUCTION PERMIT DRAWINGS

DEPARTMENT OF THE ARMY
JACKSONVILLE DISTRICT, CORPS OF ENGINEERS
JACKSONVILLE, FLORIDA

HURRICANE STORM DAMAGE REDUCTION PROJECT
SARASOTA COUNTY, FLORIDA

LIDO KEY BEACH EROSION CONTROL PROJECT

GROIN NO. 1 - PLAN VIEW

DATE	DESIGNED	APPROVED
2/26/15	J.W.L.	L.R.P.
9/03/15	J.W.L.	J.E.B.

DATE: MAR. 2014
DWN BY: J.W.L.
PLATE: 29 OF 34

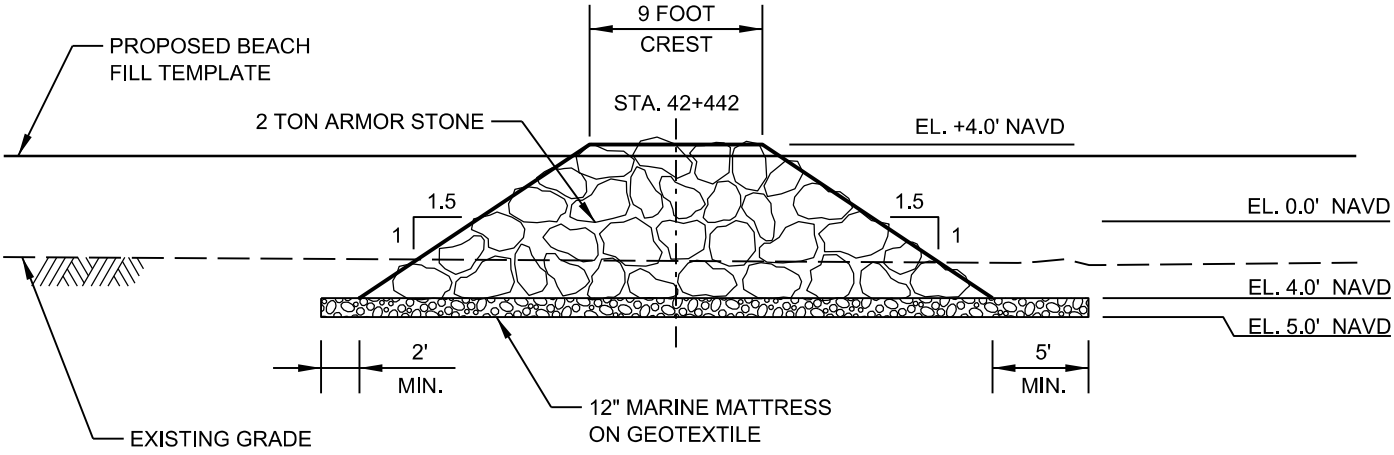

I
PL-29

GROIN NO. 1 - SEAWARD SECTION

LOOKING LANDWARD

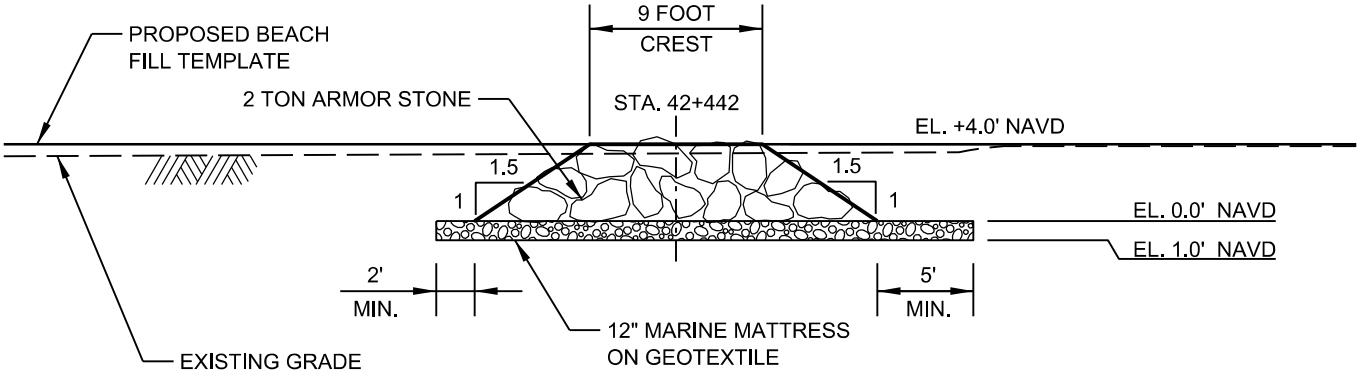

J
PL-29

GROIN NO. 1 - LANDWARD SECTION

LOOKING LANDWARD

NOTES:

1. ARMOR STONE: W=1.5 TO 2.5 TONS WITH 50% GREATER THAN 2.0 TONS, 165 PCF MINIMUM.
2. EXCAVATE AND/OR FILL AS NECESSARY TO PLACE MARINE MATTRESS AND ARMOR STONE TO ACHIEVE THE SPECIFIED CREST ELEVATION.

GRAPHIC SCALE

0 10' 20'

US Army Corps of Engineers © Jacksonville District

NOT FOR CONSTRUCTION PERMIT DRAWINGS

DEPARTMENT OF THE ARMY
JACKSONVILLE DISTRICT, CORPS OF ENGINEERS
JACKSONVILLE, FLORIDA

HURRICANE STORM DAMAGE REDUCTION PROJECT
SARASOTA COUNTY, FLORIDA

LIDO KEY BEACH EROSION CONTROL PROJECT

GROIN NO. 1 CROSS SECTIONS

DATE	DESIGNED	APPROVED
2/26/15	J.W.L.	L.R.P.
9/03/15	J.W.L.	J.E.B.

DATE: MAR. 2014
DWN BY: J.W.L.
PLATE: 30 OF 34

GROIN NOTES:

1. ARMOR STONE: W=1.5 TO 2.5 TONS WITH 50% GREATER THAN 2.0 TONS, 165 PCF MINIMUM.
2. EXCAVATE AND/OR FILL AS NECESSARY TO PLACE MARINE MATTRESS AND ARMOR STONE TO ACHIEVE THE SPECIFIED CREST ELEVATION.
3. BACKFILL WITH BEACH QUALITY SEDIMENT ONTOP OF PLACED GROIN.

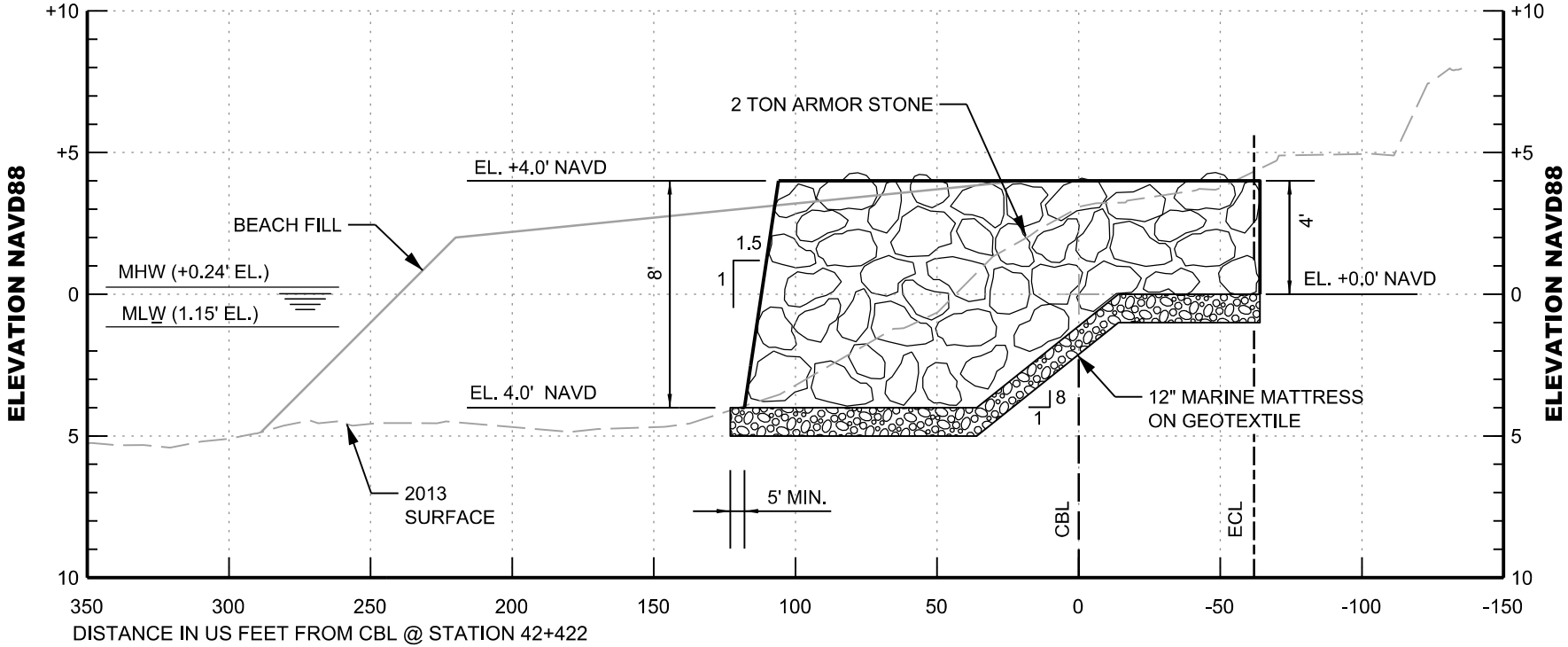

K
PL-29

GROIN NO. 1 PROFILE

LOOKING NORTHWARD

GRAPHIC SCALES

HORIZONTAL: 60' 0 60'

VERTICAL: 20' 0 20'

NOTES:

1. SEE PLATE 01 FOR GENERAL PROJECT INFORMATION
2. THE HORIZONTAL DISTANCES ARE IN US FEET AND FOLLOWS ALONG STATION 42+422 RANGES.

US Army Corps of Engineers®
Jacksonville District

NOT FOR CONSTRUCTION
PERMIT DRAWINGS

DEPARTMENT OF THE ARMY
JACKSONVILLE DISTRICT, CORPS OF ENGINEERS
JACKSONVILLE, FLORIDA

HURRICANE STORM DAMAGE REDUCTION PROJECT
SARASOTA COUNTY, FLORIDA

LIDO KEY BEACH EROSION CONTROL PROJECT

GROIN NO. 1 PROFILE

DATE	DESIGNED	APPROVED	DATE:
8/27/15	J.W.L.	J.E.B.	MAR. 2014
			DWN BY: J.W.L.

PLATE: 31 OF 34

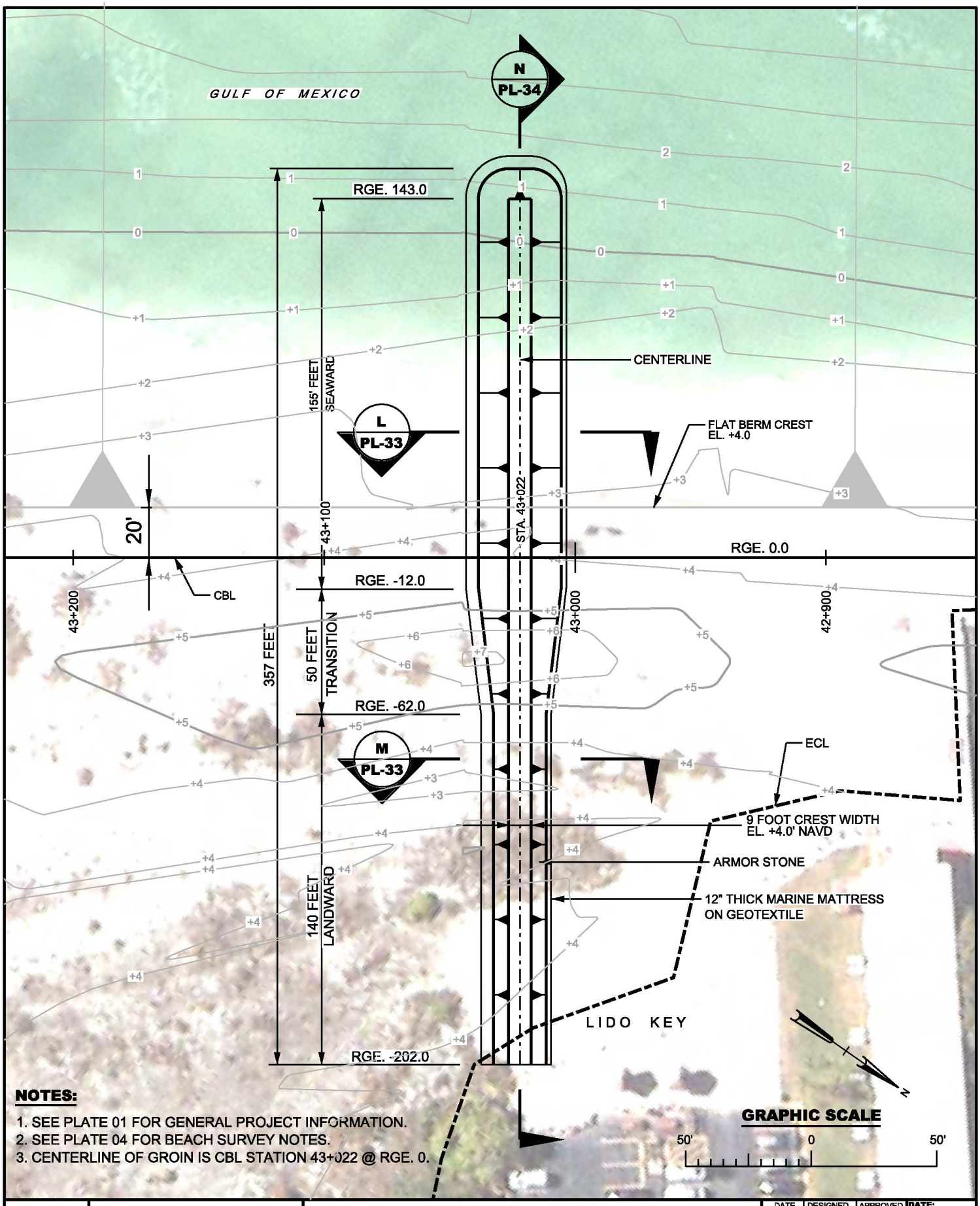

NOTES:

1. SEE PLATE 01 FOR GENERAL PROJECT INFORMATION.
2. SEE PLATE 04 FOR BEACH SURVEY NOTES.
3. CENTERLINE OF GROIN IS CBL STATION 43+022 @ RGE. 0.

US Army Corps of Engineers® Jacksonville District	**NOT FOR CONSTRUCTION PERMIT DRAWINGS**	HURRICANE STORM DAMAGE REDUCTION PROJECT SARASOTA COUNTY, FLORIDA	DATE	DESIGNED	APPROVED	DATE: MAR. 2014
	DEPARTMENT OF THE ARMY	**LIDO KEY BEACH EROSION CONTROL PROJECT**	2/26/15	J.W.L.	L.R.P.	DWN BY: J.W.L.
	JACKSONVILLE DISTRICT, CORPS OF ENGINEERS JACKSONVILLE, FLORIDA	**GROIN NO. 2 - PLAN VIEW**	9/03/15	J.W.L.	J.E.B.	PLATE: 32 OF 34

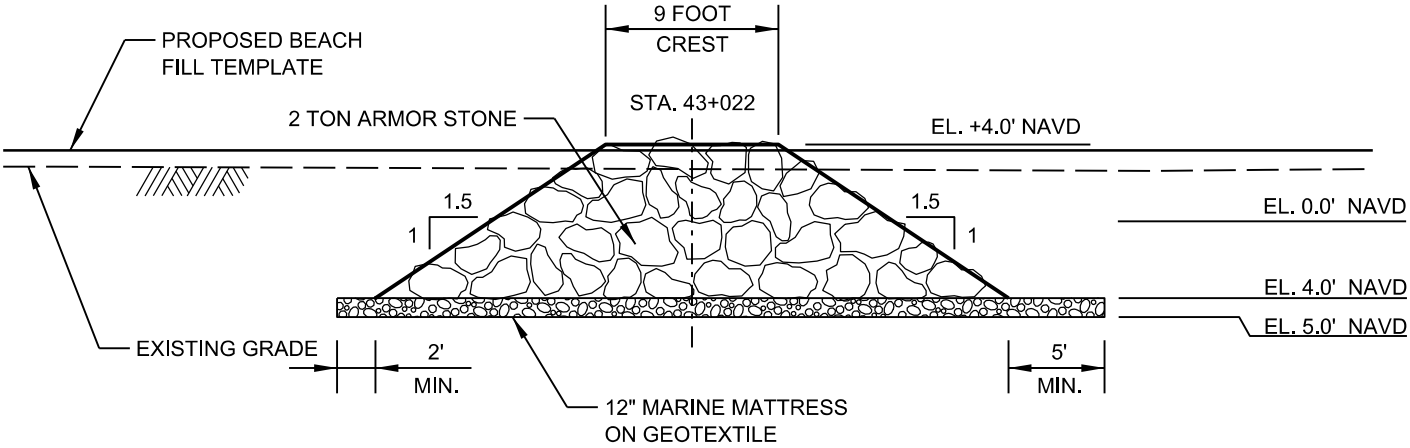

L
PL-32

GROIN NO. 2 - SEAWARD SECTION

LOOKING LANDWARD

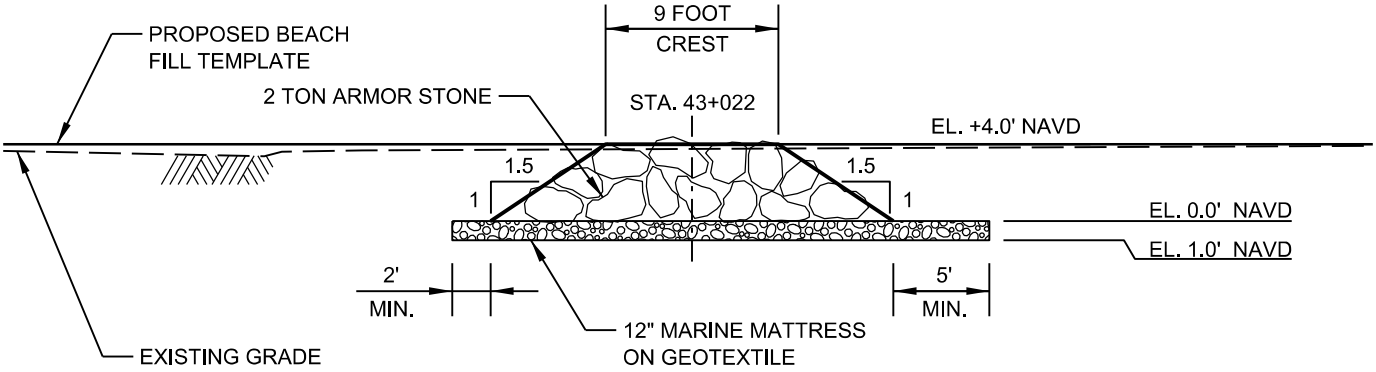

M
PL-32

GROIN NO. 2 - LANDWARD SECTION

LOOKING LANDWARD

NOTES:

1. ARMOR STONE: W=1.5 TO 2.5 TONS WITH 50% GREATER THAN 2.0 TONS, 165 PCF MINIMUM.
2. EXCAVATE AND/OR FILL AS NECESSARY TO PLACE MARINE MATTRESS AND ARMOR STONE TO ACHIEVE THE SPECIFIED CREST ELEVATION.

GRAPHIC SCALE

0 10' 20'

US Army Corps of Engineers ©
Jacksonville District

NOT FOR CONSTRUCTION PERMIT DRAWINGS

DEPARTMENT OF THE ARMY
JACKSONVILLE DISTRICT, CORPS OF ENGINEERS
JACKSONVILLE, FLORIDA

HURRICANE STORM DAMAGE REDUCTION PROJECT
SARASOTA COUNTY, FLORIDA

LIDO KEY BEACH EROSION CONTROL PROJECT

GROIN NO. 2 CROSS SECTIONS

DATE	DESIGNED	APPROVED
2/26/15	J.W.L.	L.R.P.
9/03/15	J.W.L.	J.E.B.

DATE: MAR. 2014
DWN BY: J.W.L.
PLATE: 33 OF 34

GROIN NOTES:

1. ARMOR STONE: W=1.5 TO 2.5 TONS WITH 50% GREATER THAN 2.0 TONS, 165 PCF MINIMUM.
2. EXCAVATE AND/OR FILL AS NECESSARY TO PLACE MARINE MATTRESS AND ARMOR STONE TO ACHIEVE THE SPECIFIED CREST ELEVATION.
3. BACKFILL WITH BEACH QUALITY SEDIMENT ONTOP OF PLACED GROIN.

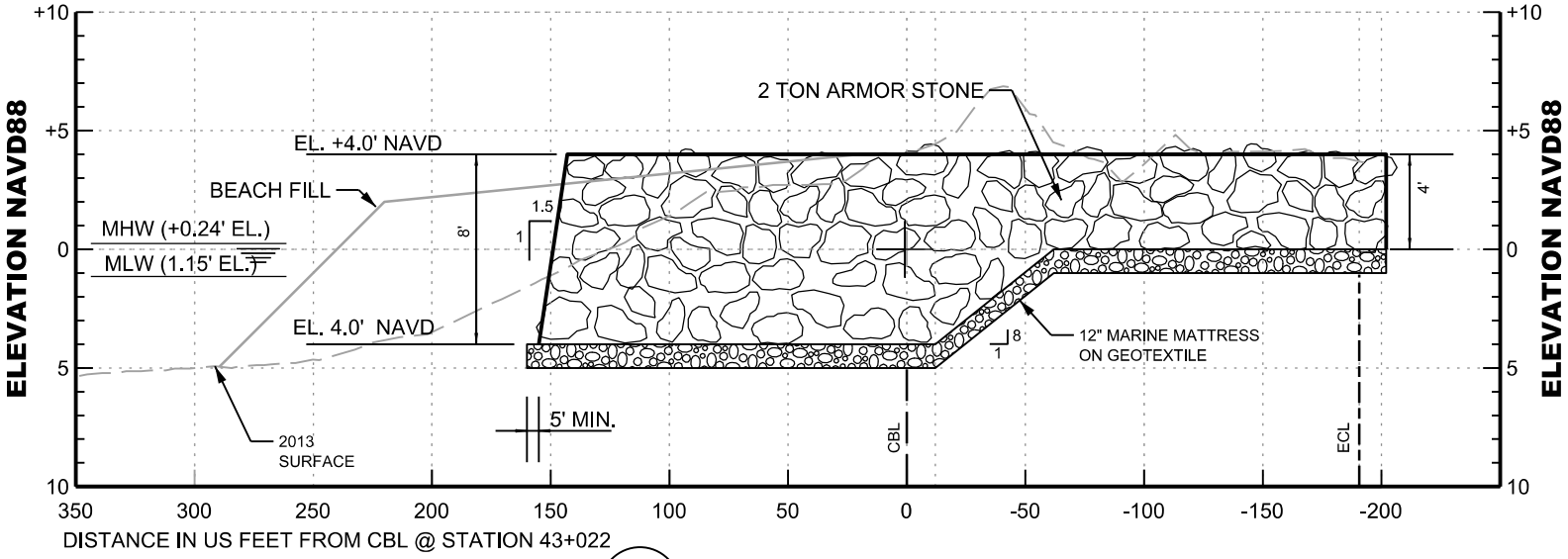

N
PL-32

GROIN NO. 2 PROFILE

LOOKING NORTHWARD

GRAPHIC SCALES

HORIZONTAL 80' 0 80'

VERTICAL 8' 0 8'

NOTES:

1. SEE PLATE 01 FOR GENERAL PROJECT INFORMATION
2. THE HORIZONTAL DISTANCES ARE IN US FEET AND FOLLOWS ALONG CBL STATION 43+022 RANGES.

US Army Corps of Engineers®
Jacksonville District

NOT FOR CONSTRUCTION
PERMIT DRAWINGS

DEPARTMENT OF THE ARMY
JACKSONVILLE DISTRICT, CORPS OF ENGINEERS
JACKSONVILLE, FLORIDA

HURRICANE STORM DAMAGE REDUCTION PROJECT
SARASOTA COUNTY, FLORIDA

LIDO KEY BEACH EROSION CONTROL PROJECT

GROIN NO. 2 PROFILE

DATE	DESIGNED	APPROVED	DATE:
9/03/15	J.W.L.	J.E.B.	MAR. 2014

DWN BY: J.W.L.

PLATE: 34 OF 34