ANNEX C-1

Plates

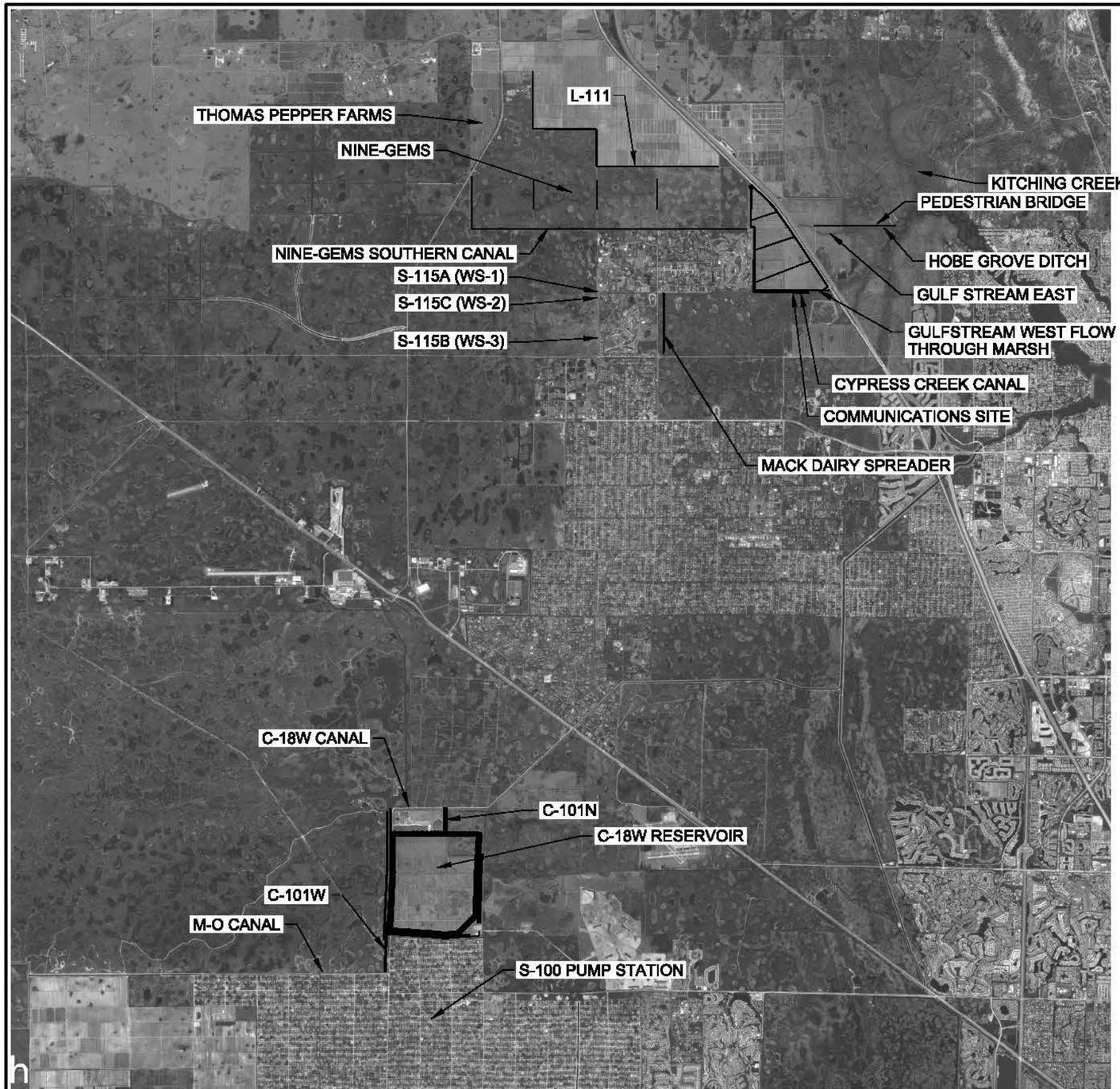

PROJECT VICINITY

N

0 10000' 20000'

US Army Corps of Engineers

U.S. ARMY CORPS OF ENGINEERS
JACKSONVILLE DISTRICT
JACKSONVILLE, FLORIDA

CENTRAL AND SOUTHERN FLORIDA PROJECTS
COMPREHENSIVE EVERGLADES RESTORATION PROJECT
LOXAHATCHEE RIVER WATERSHED RESTORATION

PROJECT VICINITY MAP

PLATE NO.

P-01

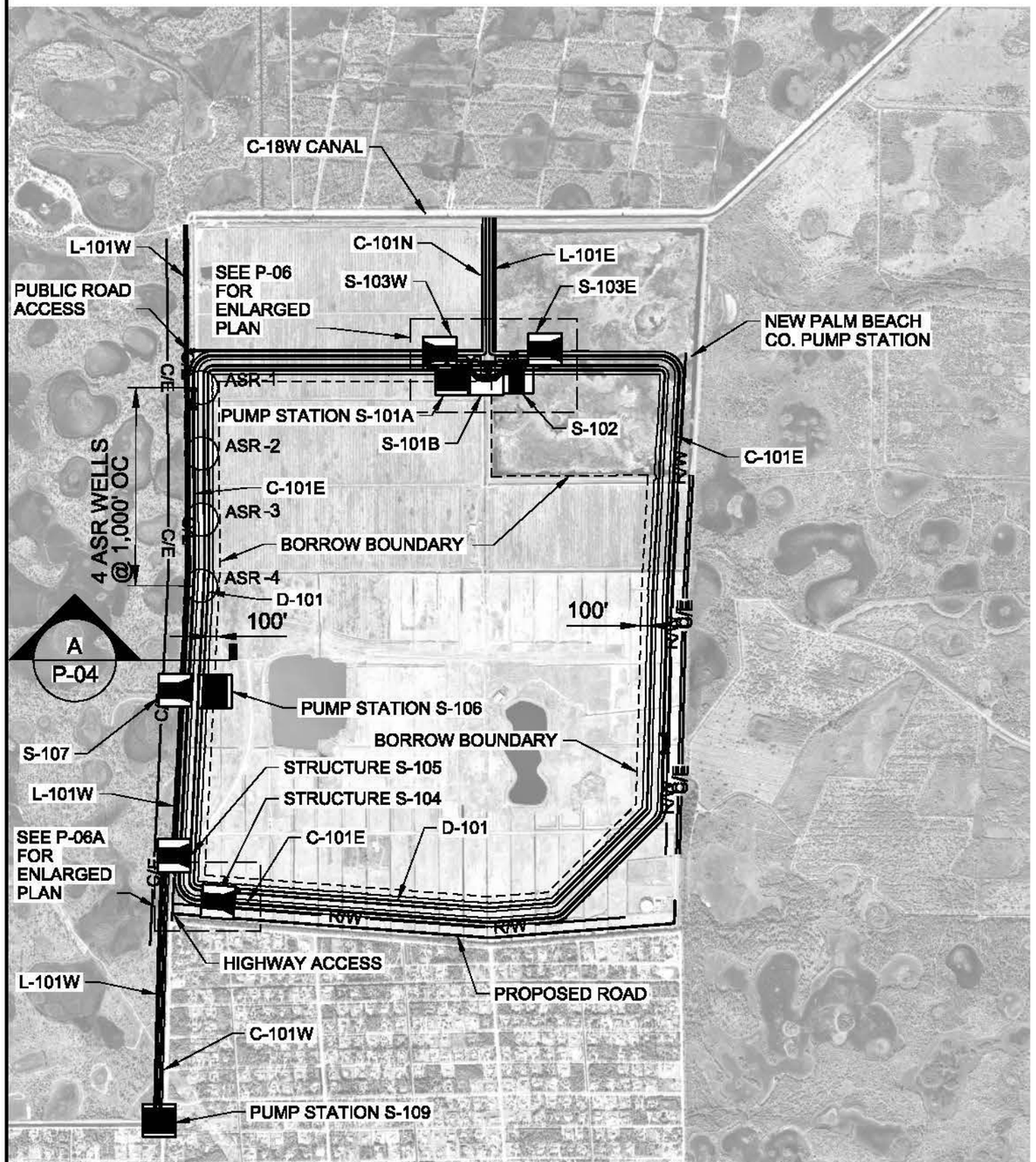

C-18W RESERVOIR SITE PLAN

LEGEND

- GATED CULVERT
- GATED SPILLWAY
- PUMPING STATION
- WIER
- EMERGENCY SPILLWAY
- ASR — ASR WELL

N

0 2000' 4000'

US Army Corps of Engineers

U.S. ARMY CORPS OF ENGINEERS
JACKSONVILLE DISTRICT
JACKSONVILLE, FLORIDA

CENTRAL AND SOUTHERN FLORIDA PROJECTS
COMPREHENSIVE EVERGLADES RESTORATION PROJECT
LOXAHATCHEE RIVER WATERSHED RESTORATION
C-18W RESERVOIR SITE PLAN

PLATE NO.
P-02

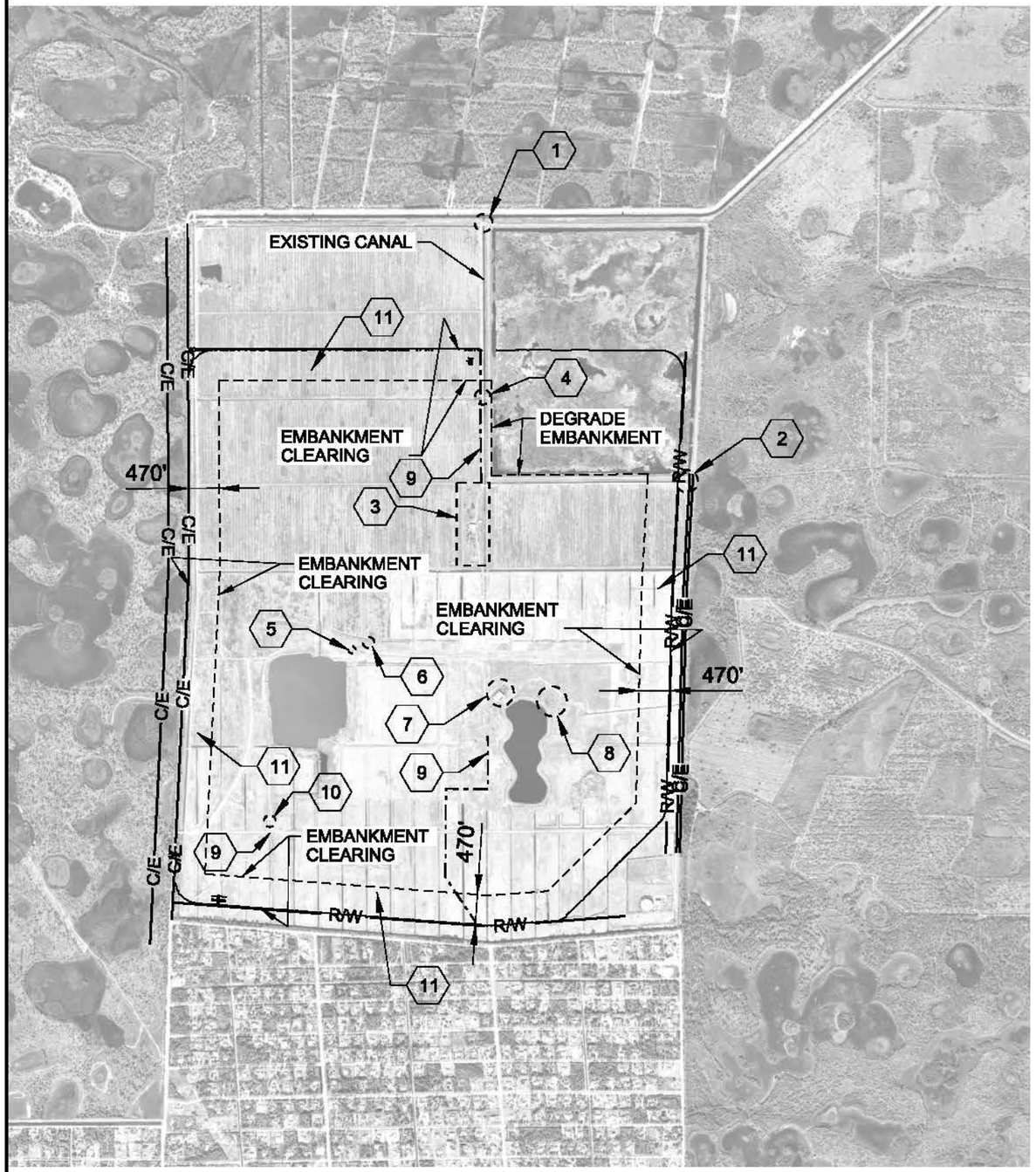

C-18W RESERVOIR DEMOLITION PLAN

KEY NOTES:

1 PUMP STATION TO BE DEMOLISHED

2 PALM BEACH COUNTY PUMP STATION TO BE DEMOLISHED AND REPLACED

3 MULTIPLE STRUCTURES AND AGRICULTURAL BUILDINGS TO BE DEMOLISHED

4 AGRICULTURE PUMP STATION TO BE DEMOLISHED

5 UNKNOWN STRUCTURE TO BE DEMOLISHED

6 UNKNOWN STRUCTURE TO BE DEMOLISHED

7 DILAPIDATED STRUCTURE TO BE DEMOLISHED

8 COLUMNS/POSTS TO BE DEMOLISHED

9 UTILITY POLES TO BE REMOVED

10 STRUCTURE TO BE DEMOLISHED

11 EXISTING IRRIGATION PIPING BENEATH EMBANKMENT WILL BE REMOVED PRIOR TO CONSTRUCTION

N

0 2000' 4000'

US Army Corps of Engineers

U.S. ARMY CORPS OF ENGINEERS
JACKSONVILLE DISTRICT
JACKSONVILLE, FLORIDA

CENTRAL AND SOUTHERN FLORIDA PROJECTS
COMPREHENSIVE EVERGLADES RESTORATION PROJECT
LOXAHATCHEE RIVER WATERSHED RESTORATION
C-18W RESERVOIR
DEMOLITION PLAN

PLATE NO.
P-03

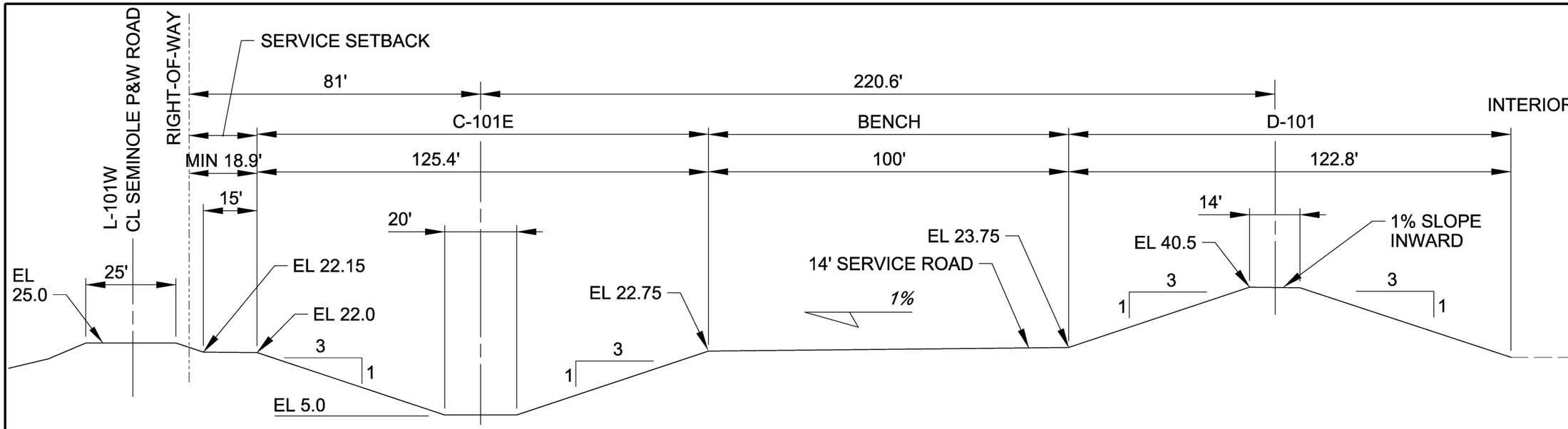

A
P-02

C-18W WESTERN EMBANKMENT SECTION

0 30' 60'

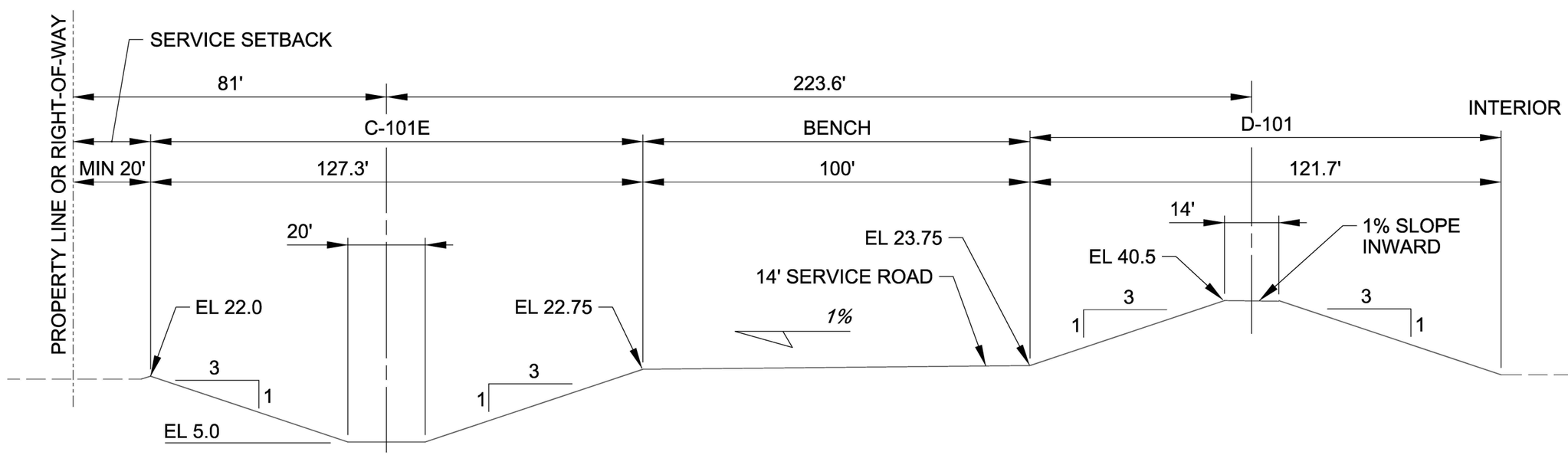

TYPICAL C-18W EMBANKMENT CROSS SECTION

0 30' 60'

US Army Corps of Engineers

U.S. ARMY CORPS OF ENGINEERS
JACKSONVILLE DISTRICT
JACKSONVILLE, FLORIDA

CENTRAL AND SOUTHERN FLORIDA PROJECTS
COMPREHENSIVE EVERGLADES RESTORATION PROJECT
LOXAHATCHEE RIVER WATERSHED RESTORATION
C-18W RESERVOIR EMBANKMENT SECTIONS

PLATE NO.
P-04

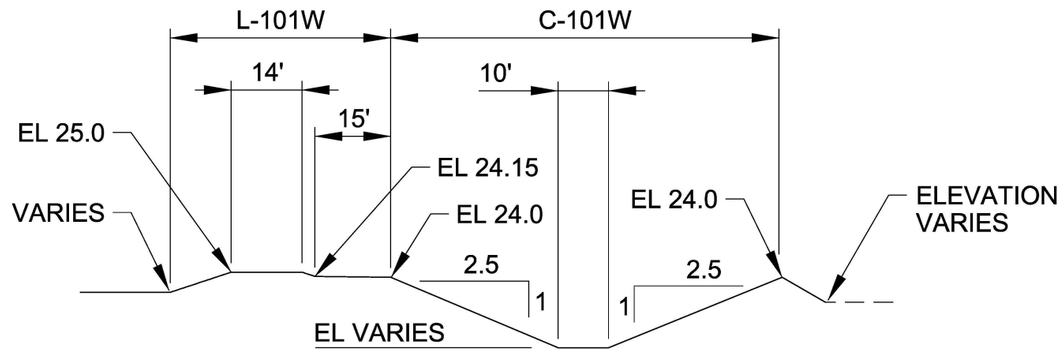

TYPICAL M-O CONNECTOR CANAL CROSS SECTION

0 30' 60'

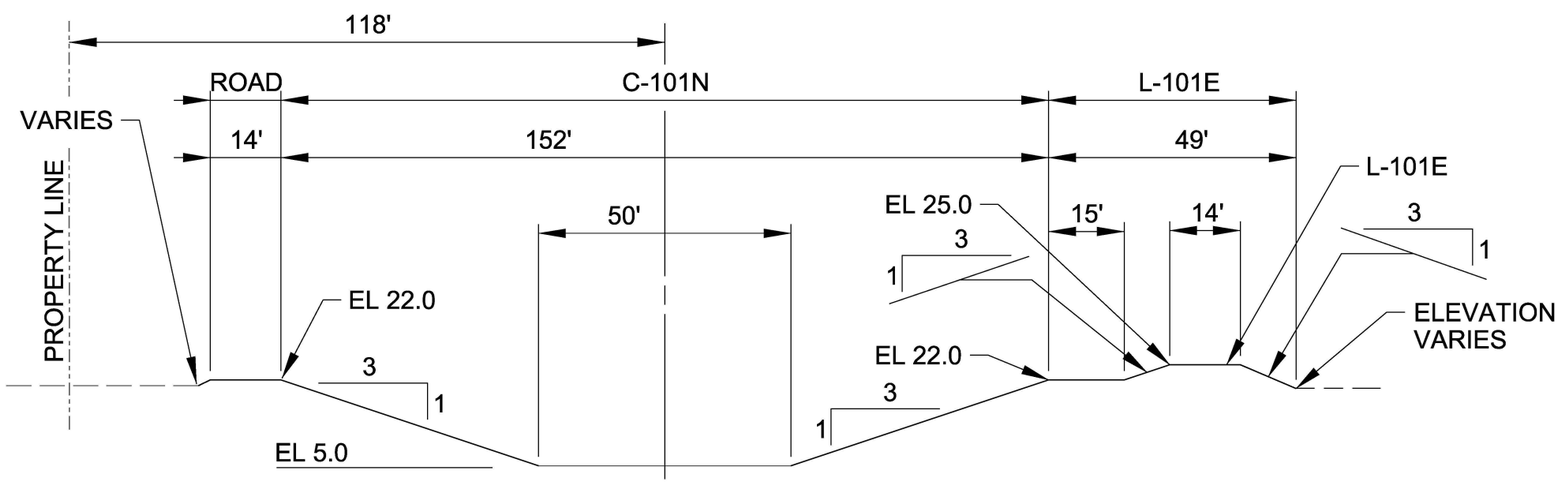

TYPICAL C-101N CANAL CROSS SECTION

0 30' 60'

US Army Corps of Engineers

U.S. ARMY CORPS OF ENGINEERS
JACKSONVILLE DISTRICT
JACKSONVILLE, FLORIDA

CENTRAL AND SOUTHERN FLORIDA PROJECTS
COMPREHENSIVE EVERGLADES RESTORATION PROJECT
LOXAHATCHEE RIVER WATERSHED RESTORATION
C-18W RESERVOIR
TYPICAL CANAL SECTIONS

PLATE NO.

P-05

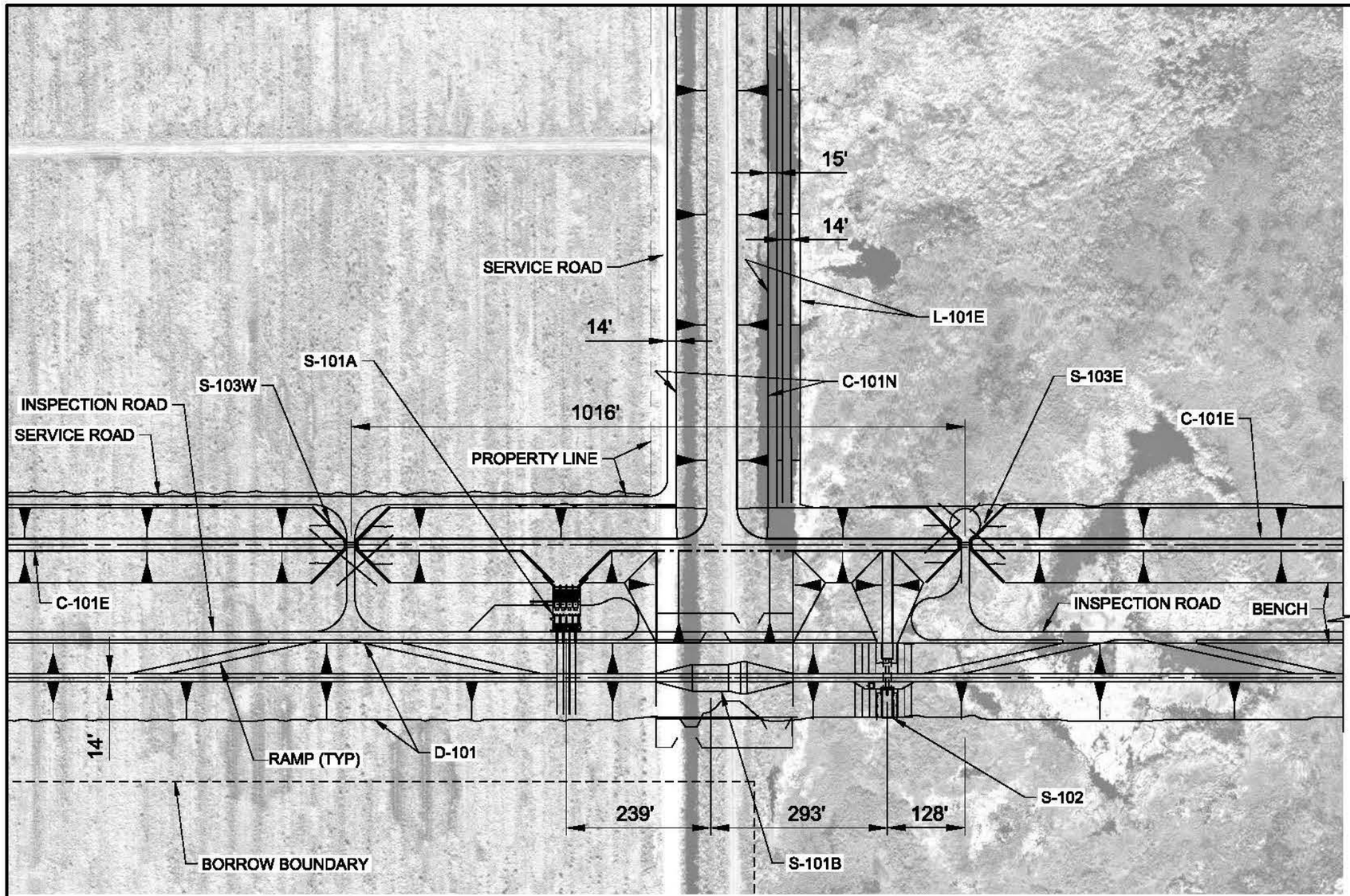

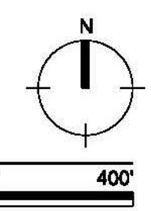

C-18W RESERVOIR ENLARGED PLAN

US Army Corps of Engineers

U.S. ARMY CORPS OF ENGINEERS
JACKSONVILLE DISTRICT
JACKSONVILLE, FLORIDA

CENTRAL AND SOUTHERN FLORIDA PROJECTS
COMPREHENSIVE EVERGLADES RESTORATION PROJECT
LOXAHATCHEE RIVER WATERSHED RESTORATION
C-18W RESERVOIR RESERVOIR INFLOW

PLATE NO.
P-06

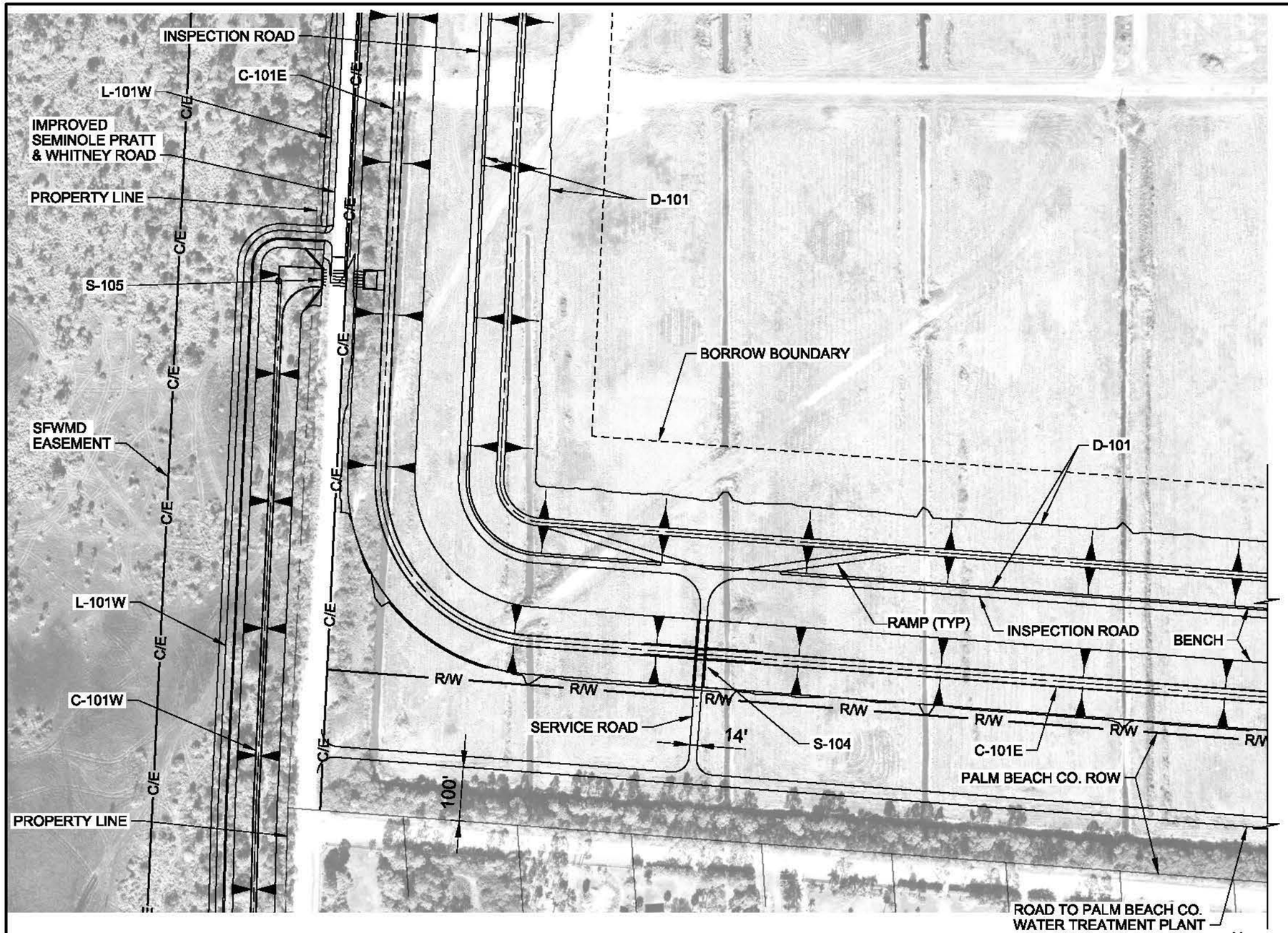

C-18W RESERVOIR SEEPAGE CONNECTION M-O CONNECTER CANAL

US Army Corps of Engineers

U.S. ARMY CORPS OF ENGINEERS
JACKSONVILLE DISTRICT
JACKSONVILLE, FLORIDA

CENTRAL AND SOUTHERN FLORIDA PROJECTS
COMPREHENSIVE EVERGLADES RESTORATION PROJECT
LOXAHATCHEE RIVER
WATERSHED RESTORATION
C-18W RESERVOIR
SEEPAGE CONNECTION M-O CANAL

PLATE NO.

P-06A

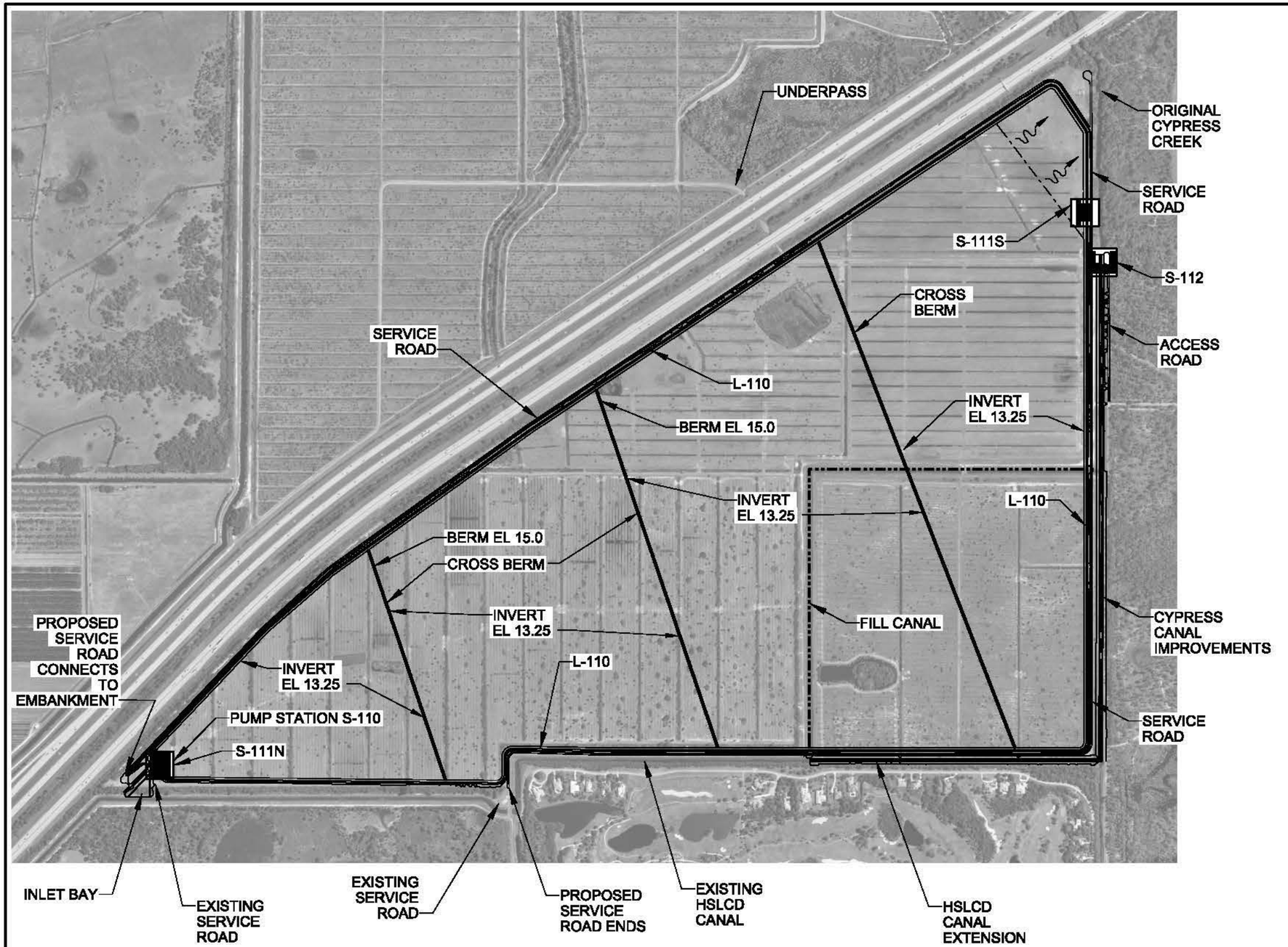

LEGEND

- GATED CULVERT
- GATED SPILLWAY
- PUMPING STATION
- WIER
- EMERGENCY SPILLWAY

GULF STREAM WEST FLOW THROUGH MARSH SITE PLAN

N

0 1000' 2000'

US Army Corps of Engineers

U.S. ARMY CORPS OF ENGINEERS
JACKSONVILLE DISTRICT
JACKSONVILLE, FLORIDA

CENTRAL AND SOUTHERN FLORIDA PROJECTS
COMPREHENSIVE EVERGLADES RESTORATION PROJECT
LOXAHATCHEE RIVER WATERSHED RESTORATION
GULF STREAM WEST FLOW THROUGH MARSH SITE PLAN

PLATE NO.

P-07

KEY NOTES:

1 AGRICULTURAL BUILDING TO BE DEMOLISHED

2 WATER CONTROL STRUCTURE TO BE DEMOLISHED

3 UNKNOWN FACILITY TO BE DEMOLISHED

4 TIMBER BRIDGE TO BE DEMOLISHED

5 AGRICULTURAL FACILITY TO BE DEMOLISHED

6 EXISTING IRRIGATION PIPING BENEATH EMBANKMENT WILL BE REMOVED PRIOR TO CONSTRUCTION

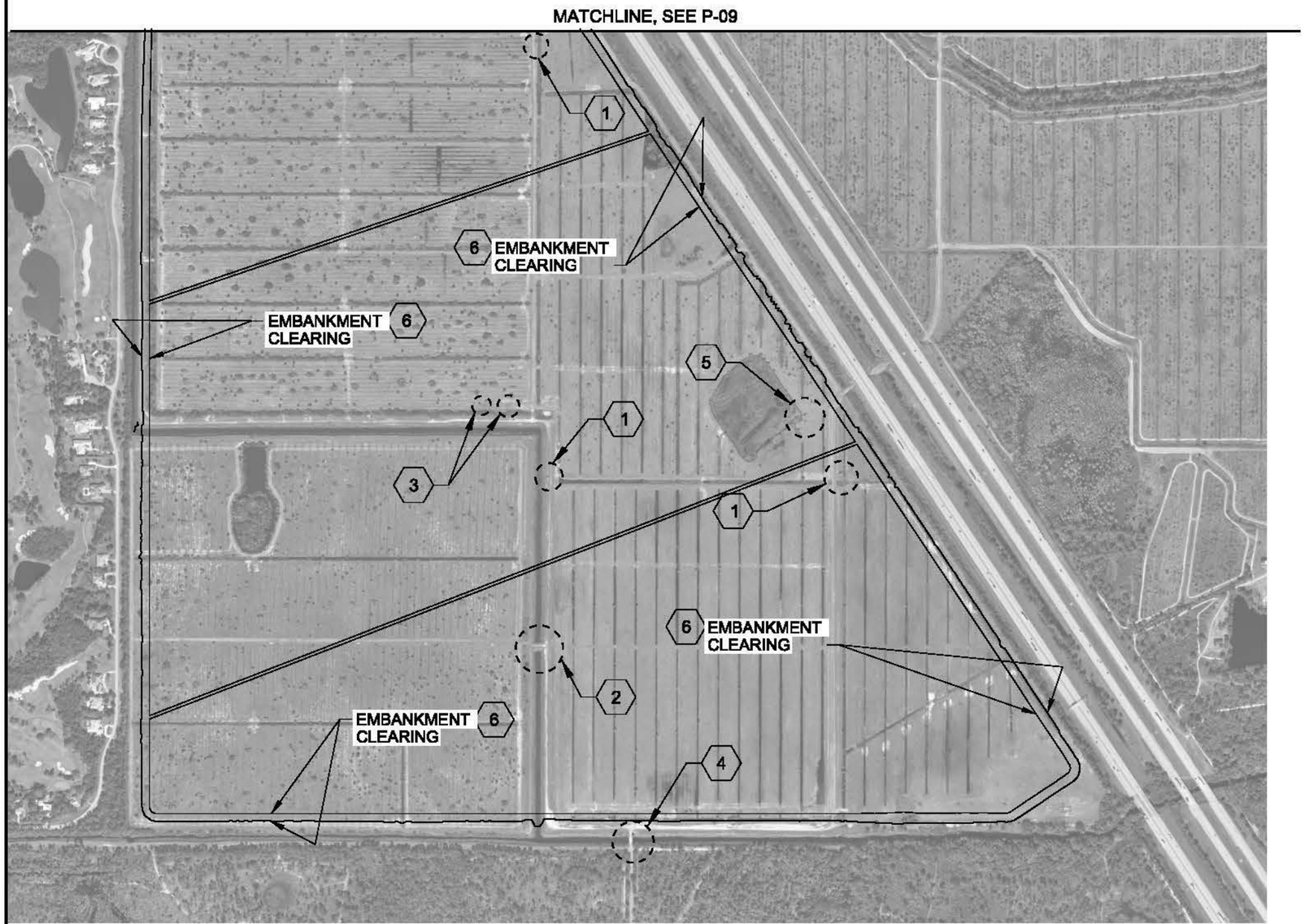

DEMOLITION PLAN, SHEET 1

N

0 800' 1600'

US Army Corps of Engineers

U.S. ARMY CORPS OF ENGINEERS
JACKSONVILLE DISTRICT
JACKSONVILLE, FLORIDA

CENTRAL AND SOUTHERN FLORIDA PROJECTS
COMPREHENSIVE EVERGLADES RESTORATION PROJECT
LOXAHATCHEE RIVER WATERSHED RESTORATION
GULF STREAM WEST DEMOLITION PLAN

PLATE NO.

P-08

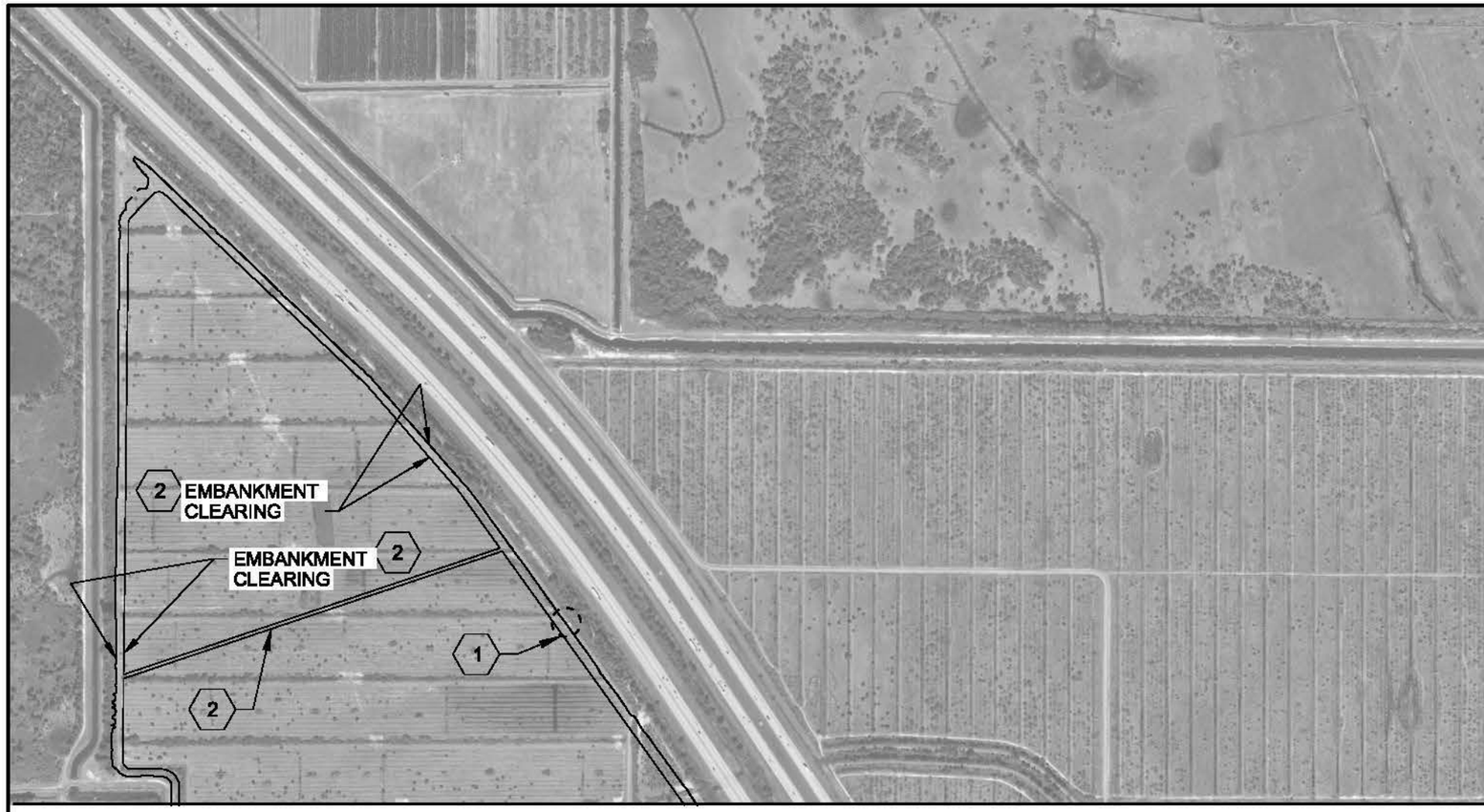

MATCHLINE, SEE P-08

KEY NOTES:

1 AGRICULTURAL BUILDING TO BE DEMOLISHED

2 EXISTING IRRIGATION PIPING BENEATH EMBANKMENT WILL BE REMOVED PRIOR TO CONSTRUCTION

N

0 800' 1600'

DEMOLITION PLAN, SHEET 2

US Army Corps of Engineers

U.S. ARMY CORPS OF ENGINEERS
JACKSONVILLE DISTRICT
JACKSONVILLE, FLORIDA

CENTRAL AND SOUTHERN FLORIDA PROJECTS
COMPREHENSIVE EVERGLADES RESTORATION PROJECT
LOXAHATCHEE RIVER WATERSHED RESTORATION
GULF STREAM WEST
DEMOLITION PLAN

PLATE NO.

P-09

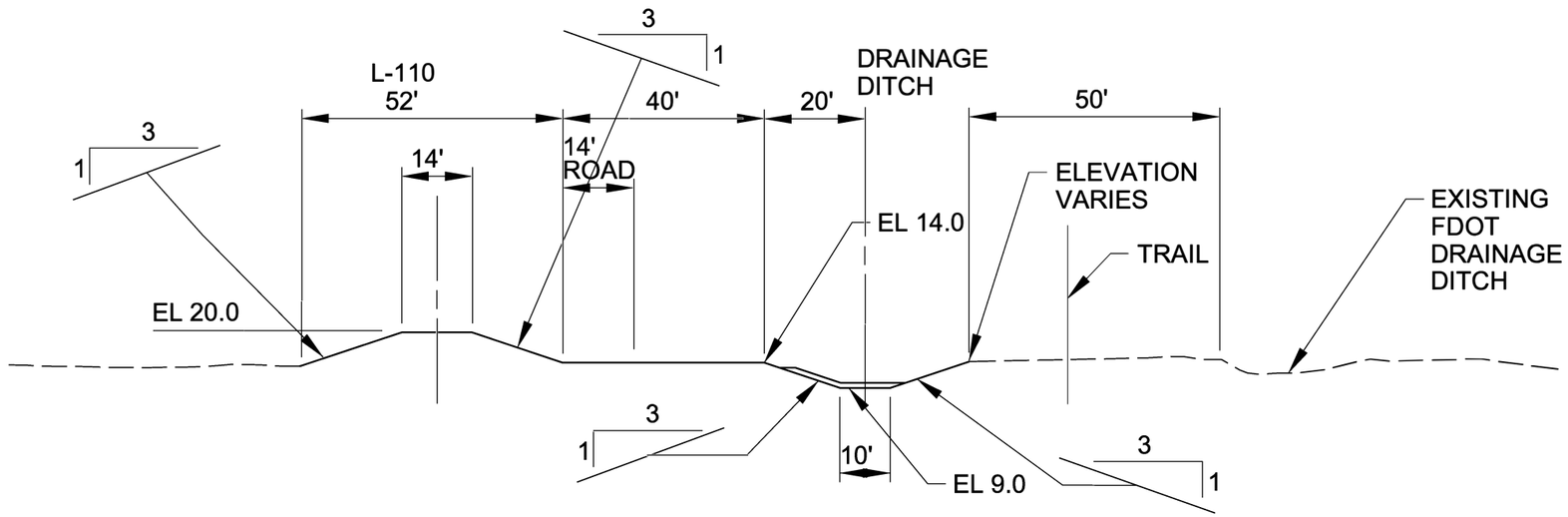

TYPICAL GULFSTREAM WEST BERM EAST SIDE SECTION

0 30' 60'

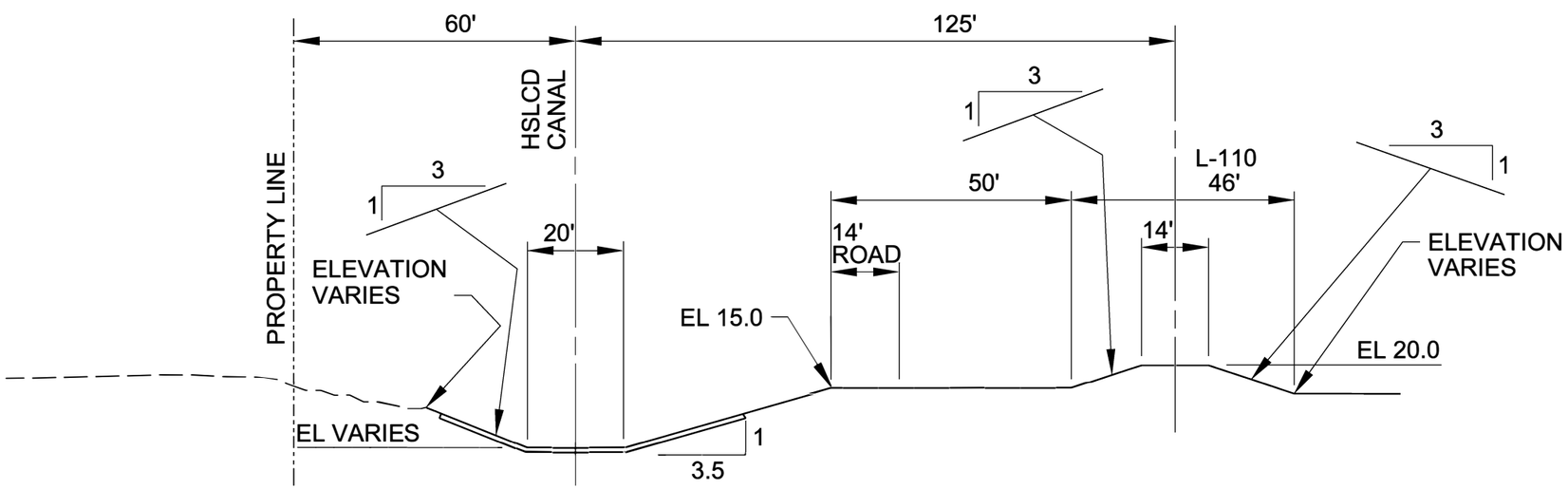

TYPICAL GULFSTREAM WEST BERM AND HSLCD CANAL SECTION

0 30' 60'

US Army Corps of Engineers

U.S. ARMY CORPS OF ENGINEERS
JACKSONVILLE DISTRICT
JACKSONVILLE, FLORIDA

CENTRAL AND SOUTHERN FLORIDA PROJECTS
COMPREHENSIVE EVERGLADES RESTORATION PROJECT
LOXAHATCHEE RIVER WATERSHED RESTORATION
GULFSTREAM WEST
TYPICAL BERM SECTIONS

PLATE NO.

P-10

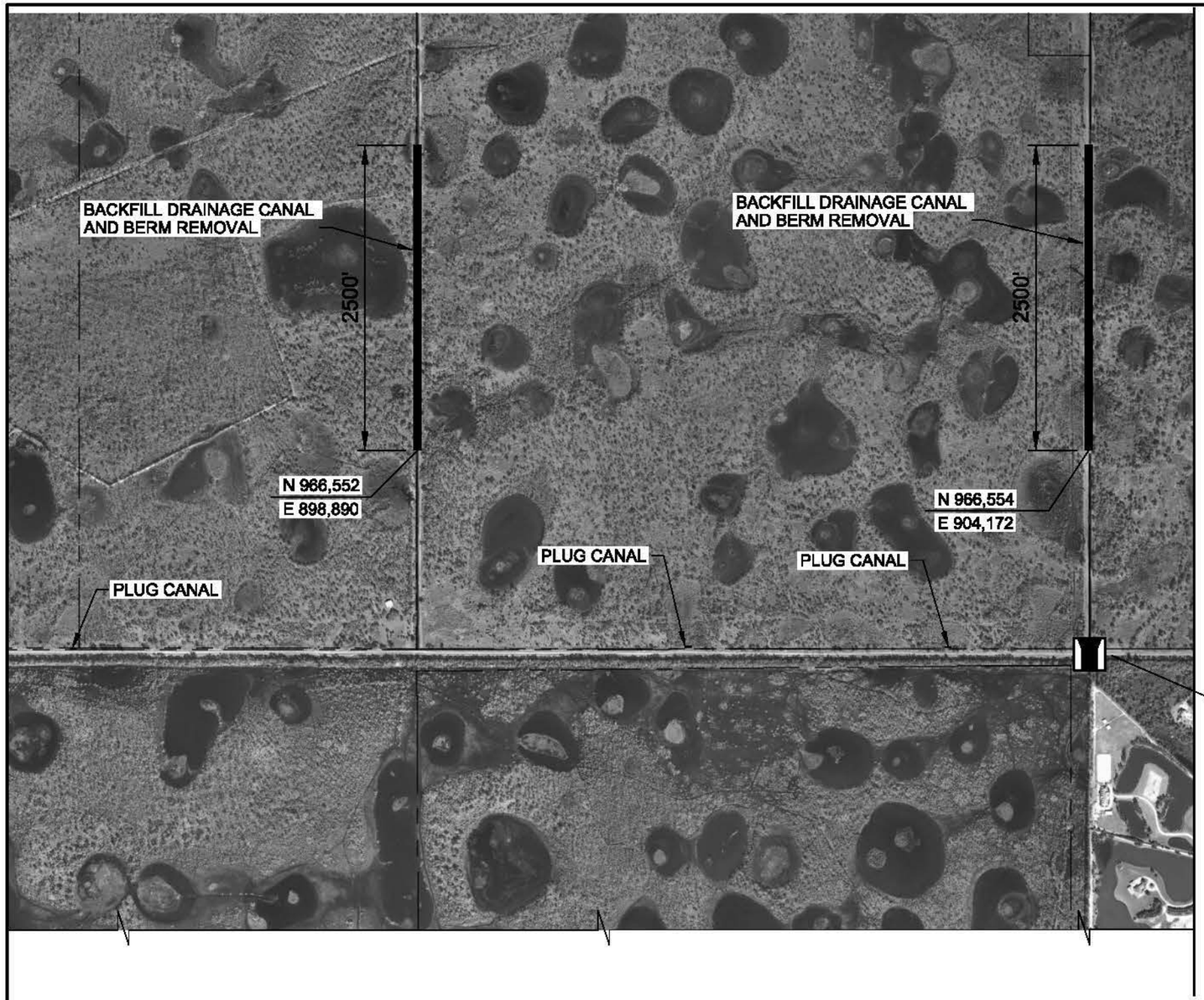

SITE PLAN - SHEET 1

N

0 1000' 2000'

US Army Corps of Engineers

U.S. ARMY CORPS OF ENGINEERS
JACKSONVILLE DISTRICT
JACKSONVILLE, FLORIDA

CENTRAL AND SOUTHERN FLORIDA PROJECTS
COMPREHENSIVE EVERGLADES RESTORATION PROJECT
LOXAHATCHEE RIVER
WATERSHED RESTORATION
NINE-GEMS SOUTHERN CANAL
SITE PLANE - SHEET 1

PLATE NO.

P-11

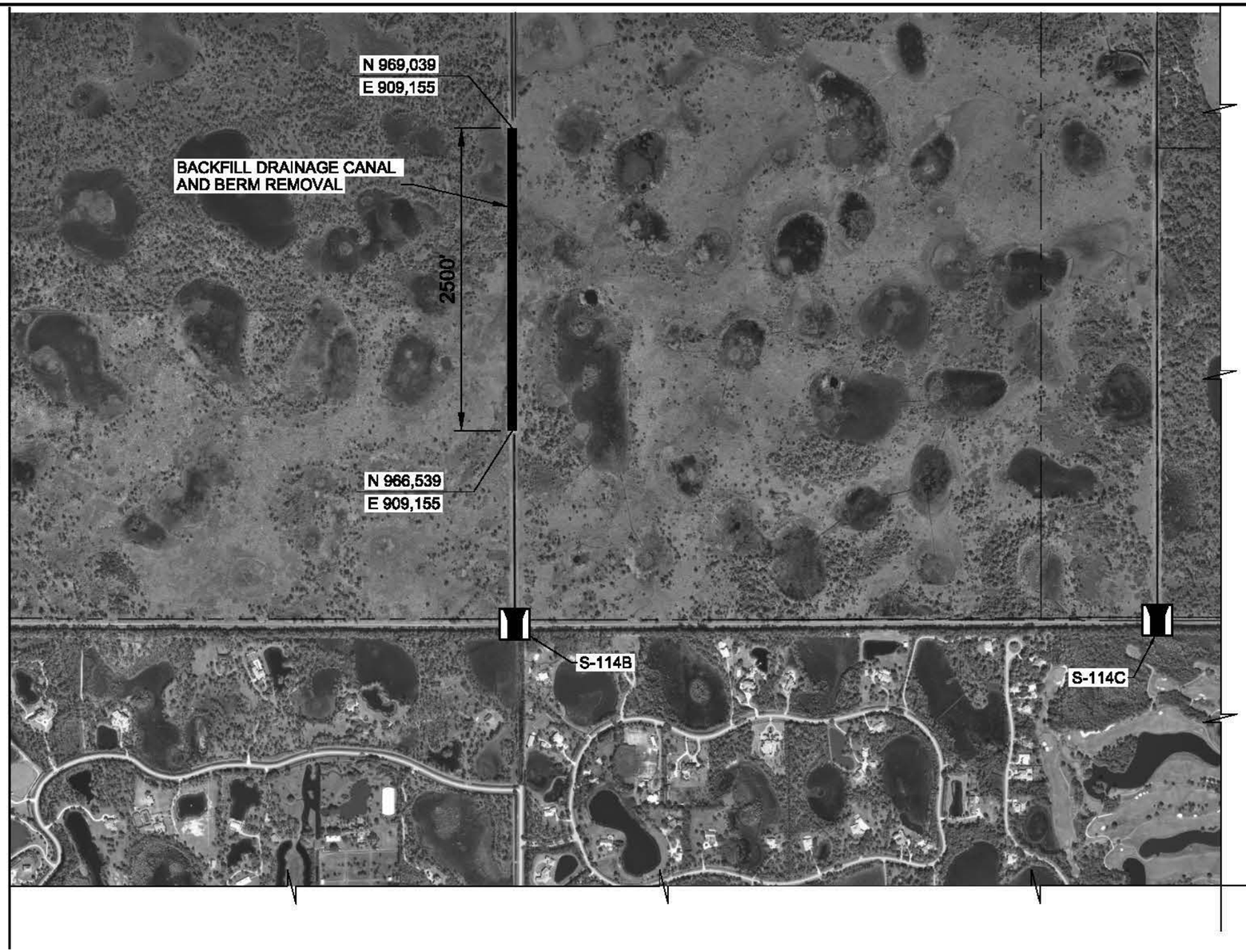

SITE PLAN - SHEET 2

N

0 1000' 2000'

US Army Corps of Engineers

U.S. ARMY CORPS OF ENGINEERS
JACKSONVILLE DISTRICT
JACKSONVILLE, FLORIDA

CENTRAL AND SOUTHERN FLORIDA PROJECTS
COMPREHENSIVE EVERGLADES RESTORATION PROJECT
LOXAHATCHEE RIVER
WATERSHED RESTORATION
NINE-GEMS SOUTHERN CANAL
SITE PLANE - SHEET 2

PLATE NO.

P-12

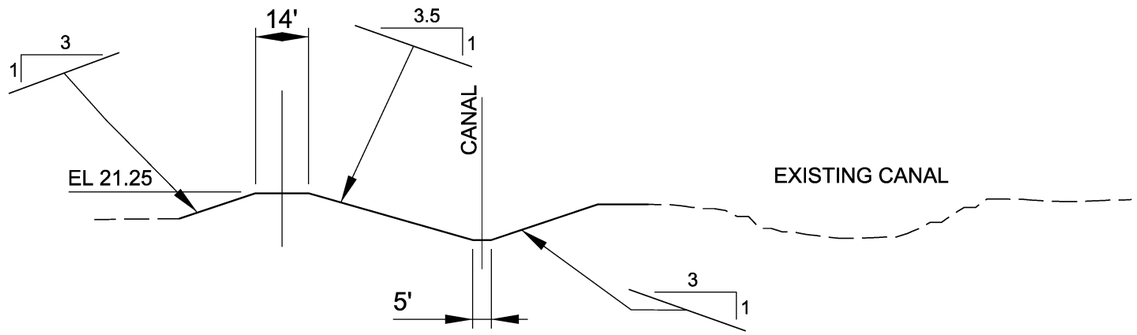

TYPICAL CANAL SECTION

0 40' 80'

US Army Corps of Engineers

U.S. ARMY CORPS OF ENGINEERS
JACKSONVILLE DISTRICT
JACKSONVILLE, FLORIDA

CENTRAL AND SOUTHERN FLORIDA PROJECTS
COMPREHENSIVE EVERGLADES RESTORATION PROJECT
LOXAHATCHEE RIVER
WATERSHED RESTORATION
NINE GEMS SOUTHERN CANAL
TYPICAL SECTION

PLATE NO.

P-12A

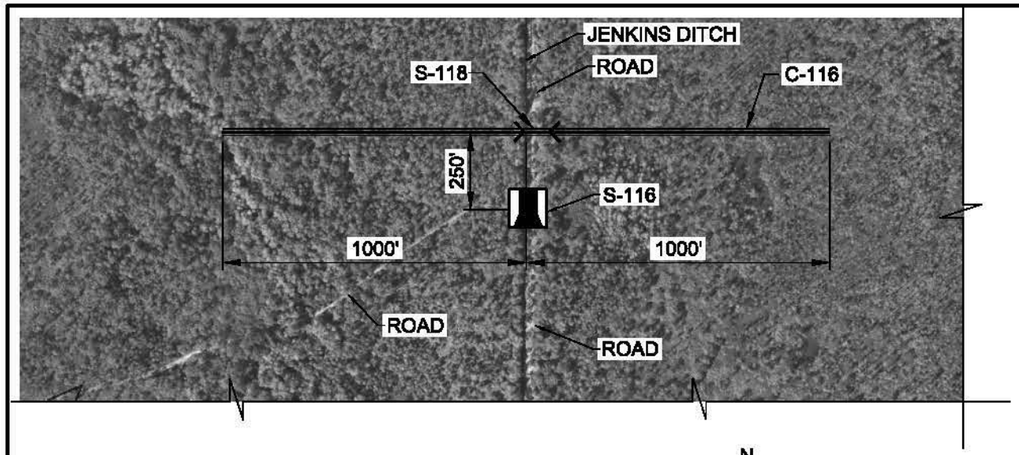

KITCHING CREEK SITE PLAN

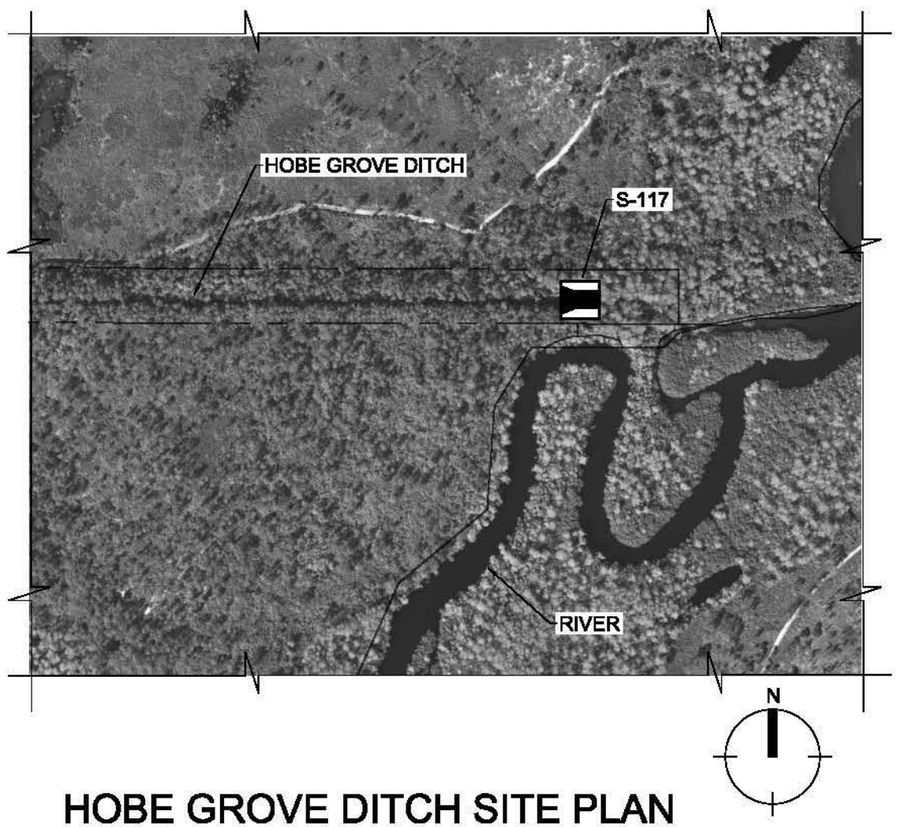

HOBE GROVE DITCH SITE PLAN

US Army Corps of Engineers

U.S. ARMY CORPS OF ENGINEERS
JACKSONVILLE DISTRICT
JACKSONVILLE, FLORIDA

CENTRAL AND SOUTHERN FLORIDA PROJECTS
COMPREHENSIVE EVERGLADES RESTORATION PROJECT
LOXAHATCHEE RIVER WATERSHED RESTORATION
HOBE GROVE AND KITCHING CREEK SITE PLAN

PLATE NO.
P-13

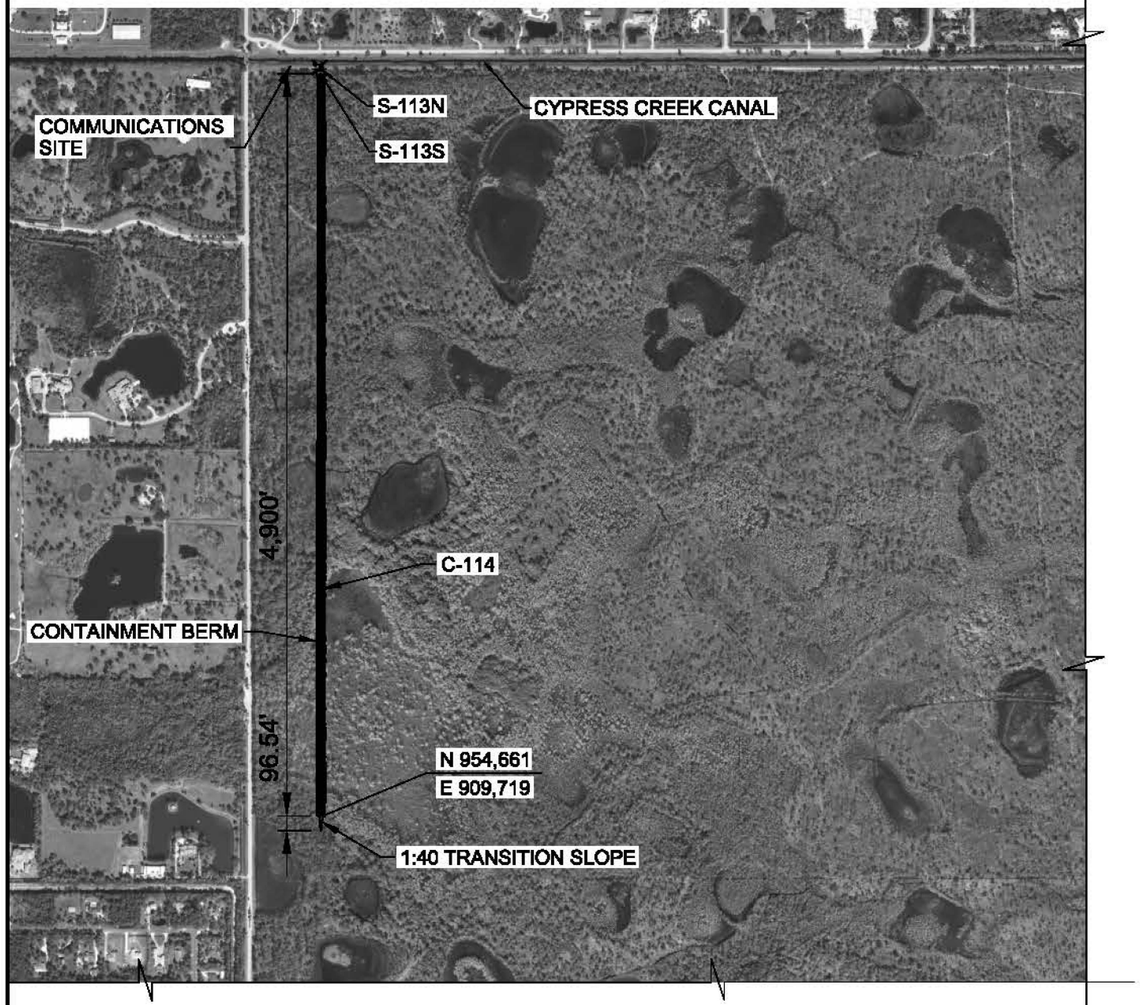

SITE PLAN

0 1000' 2000'

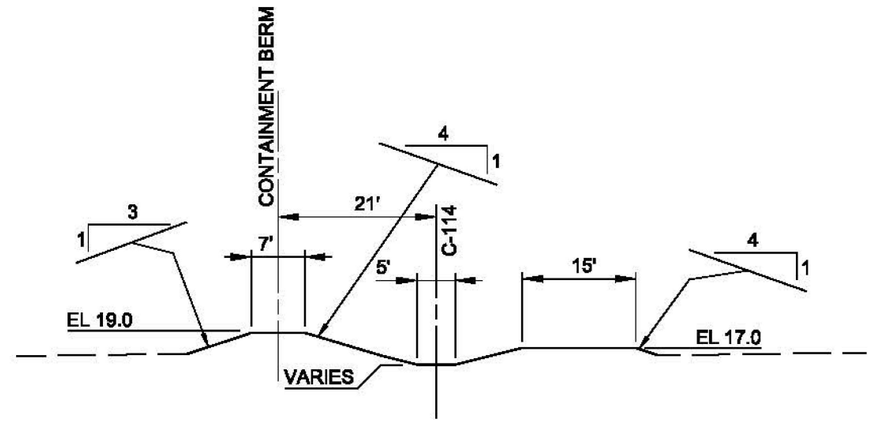

TYPICAL SECTION

0 20' 40'

US Army Corps of Engineers

U.S. ARMY CORPS OF ENGINEERS
JACKSONVILLE DISTRICT
JACKSONVILLE, FLORIDA

CENTRAL AND SOUTHERN FLORIDA PROJECTS
COMPREHENSIVE EVERGLADES RESTORATION PROJECT
LOXAHATCHEE RIVER WATERSHED RESTORATION
MACK DAIRY SITE PLAN

PLATE NO.
P-14

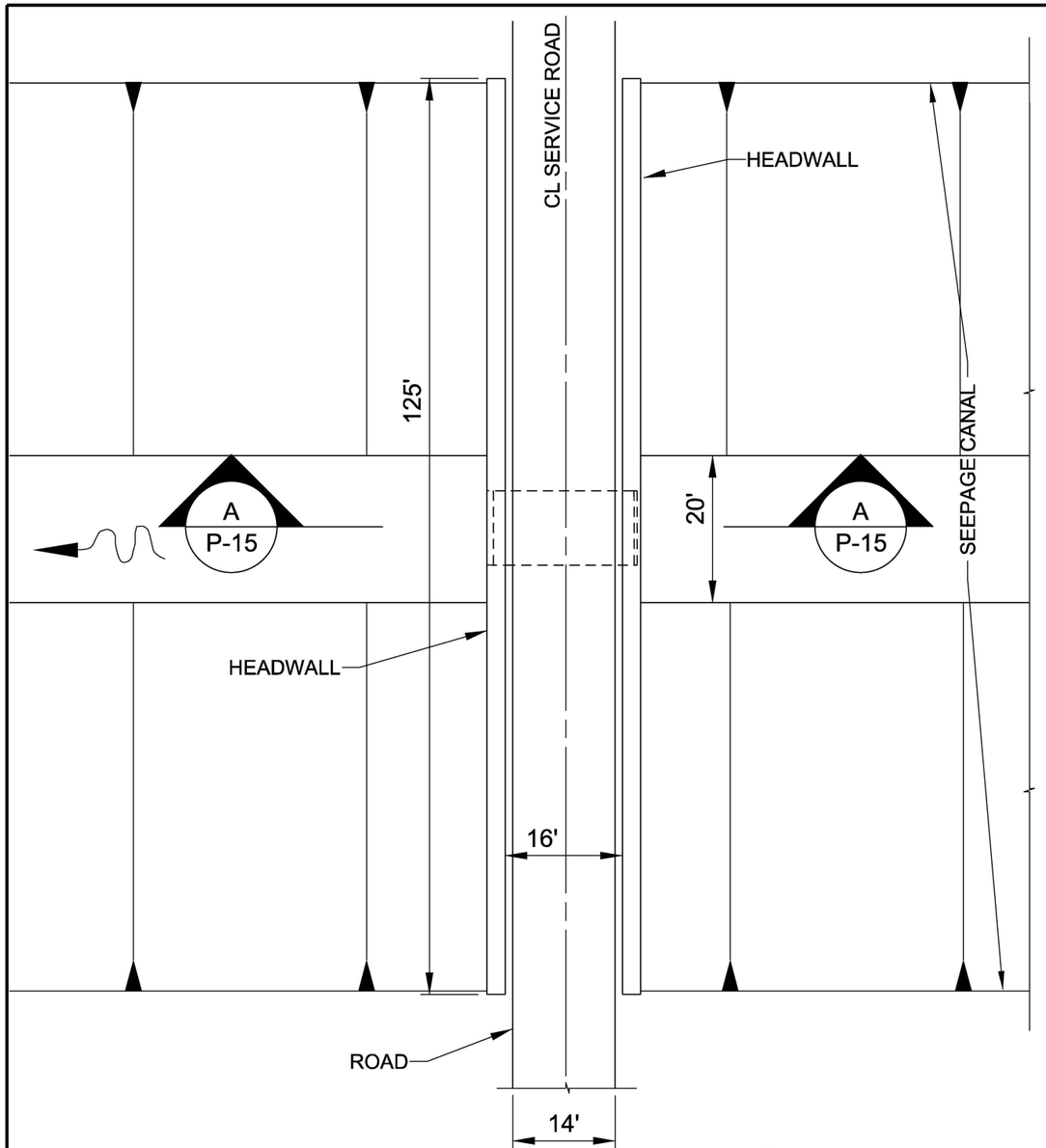

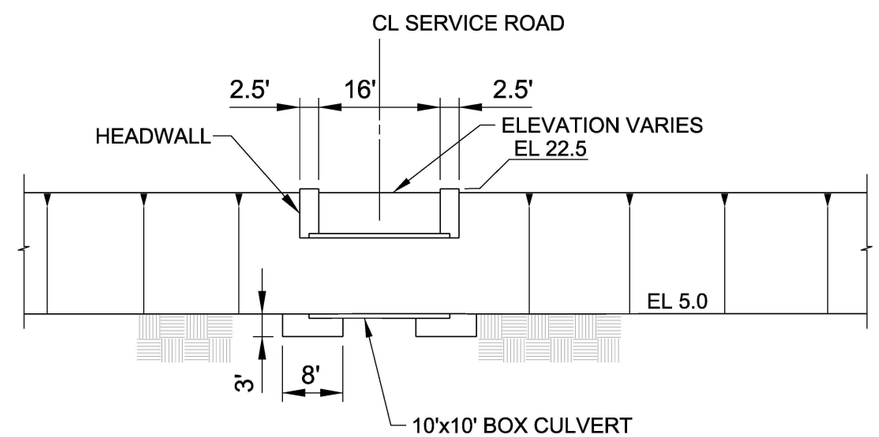

N

PLAN

0 20' 40'

A
P-15

SECTION

0 20' 40'

US Army Corps of Engineers

U.S. ARMY CORPS OF ENGINEERS
JACKSONVILLE DISTRICT
JACKSONVILLE, FLORIDA

CENTRAL AND SOUTHERN FLORIDA PROJECTS
COMPREHENSIVE EVERGLADES RESTORATION PROJECT
LOXAHATCHEE RIVER
WATERSHED RESTORATION
C-18W RESERVOIR
SERVICE ROAD BRIDGE S-104

PLATE NO.

P-15

GENERAL NOTES
- DISCHARGE ARRANGEMENT WILL BE UP AND OVER 40.5' EMBANKMENT DISCHARGEING ABOVE MAX TAILWATER OF RESERVOIR.
- DISCHARGE LENGTH: APPROX. 175'

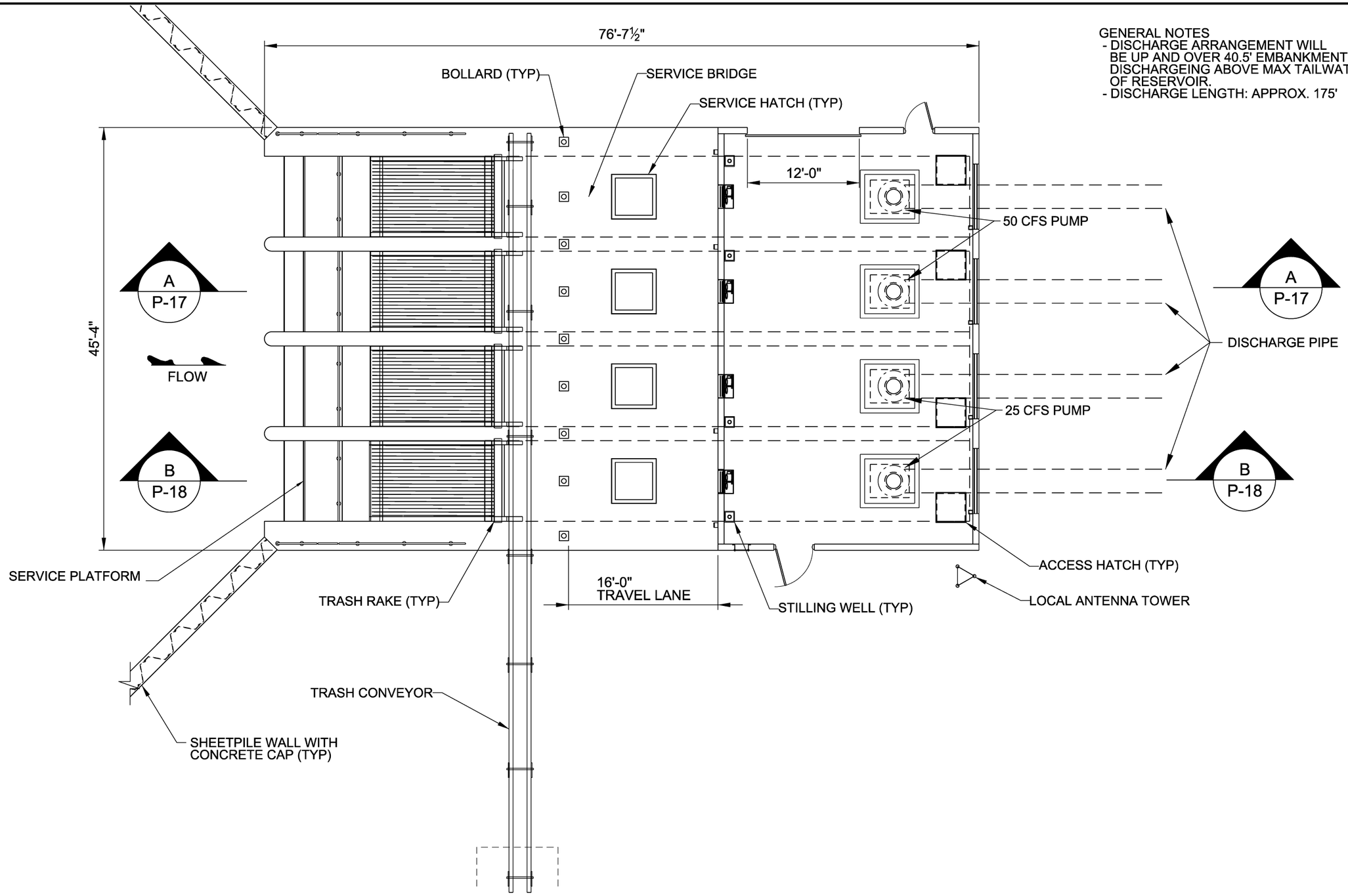

OPERATING FLOOR PLAN VIEW

0 8' 16' 32'

US Army Corps of Engineers

U.S. ARMY CORPS OF ENGINEERS
JACKSONVILLE DISTRICT
JACKSONVILLE, FLORIDA

CENTRAL AND SOUTHERN FLORIDA PROJECTS
COMPREHENSIVE EVERGLADES RESTORATION PROJECT
LOXAHATCHEE RIVER
WATERSHED RESTORATION
C-18W RESERVOIR
PUMPING STATION S-101A

PLATE NO.
P-16

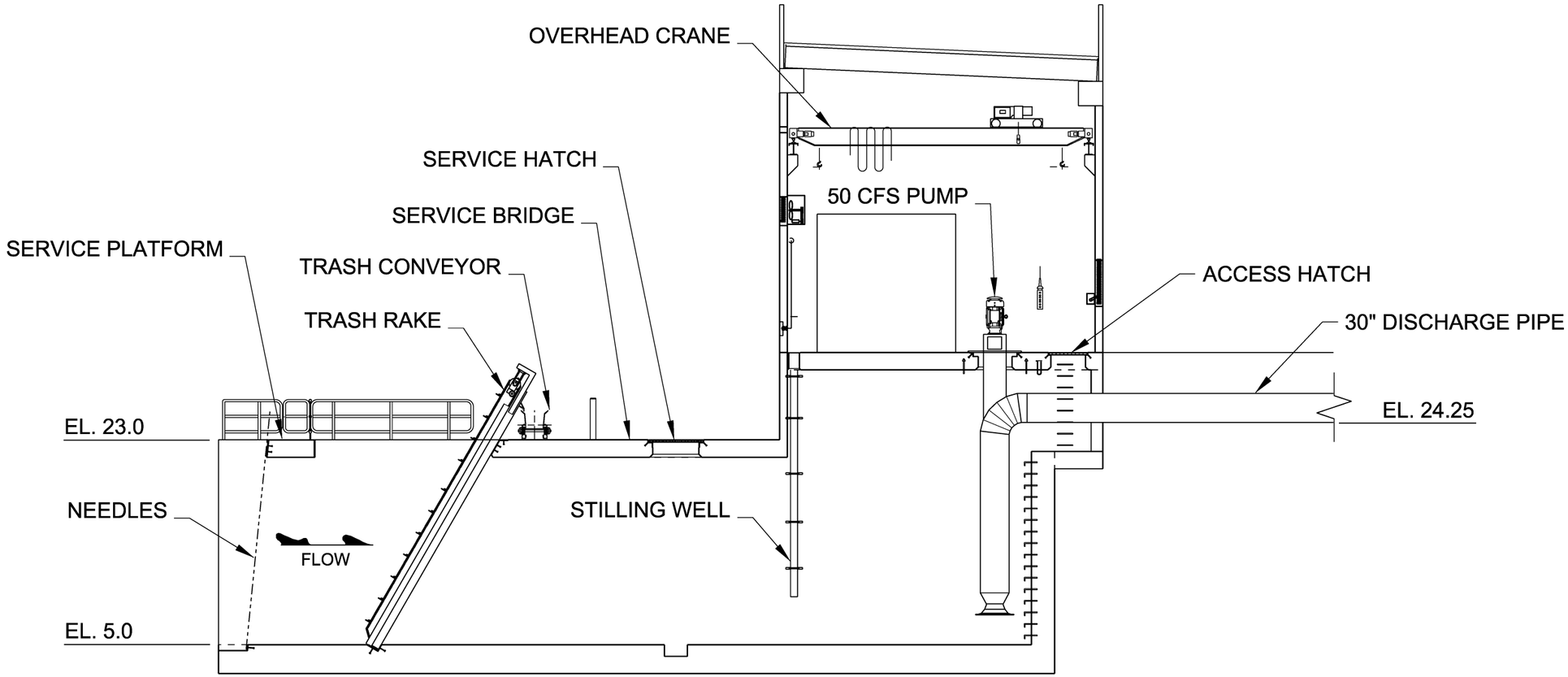

A
P-16

50CFS PUMP SECTION

0 8' 16' 32'

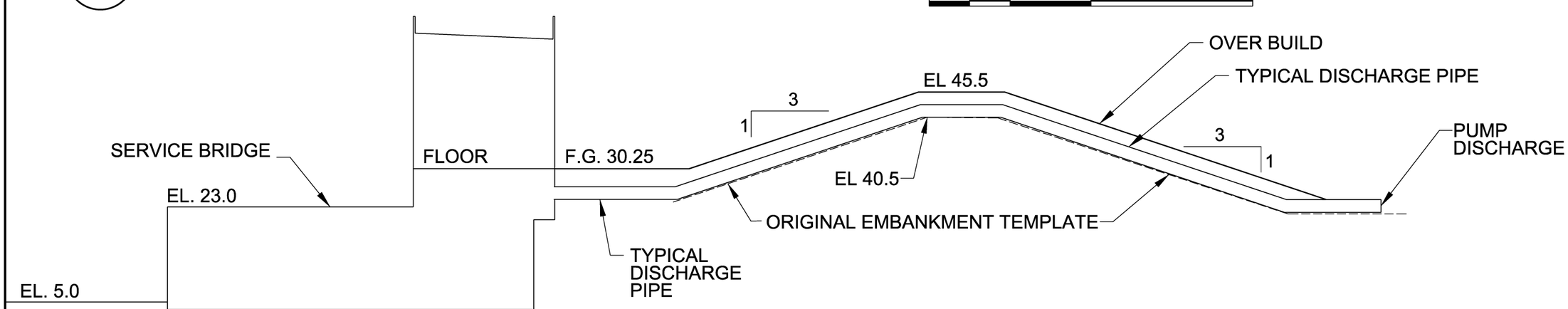

TYPICAL PUMP STATION PROFILE

SCALE: NTS

US Army Corps of Engineers

U.S. ARMY CORPS OF ENGINEERS
JACKSONVILLE DISTRICT
JACKSONVILLE, FLORIDA

CENTRAL AND SOUTHERN FLORIDA PROJECTS
COMPREHENSIVE EVERGLADES RESTORATION PROJECT
LOXAHATCHEE RIVER WATERSHED RESTORATION
C-18W RESERVOIR PUMPING STATION S-101A

PLATE NO.

P-17

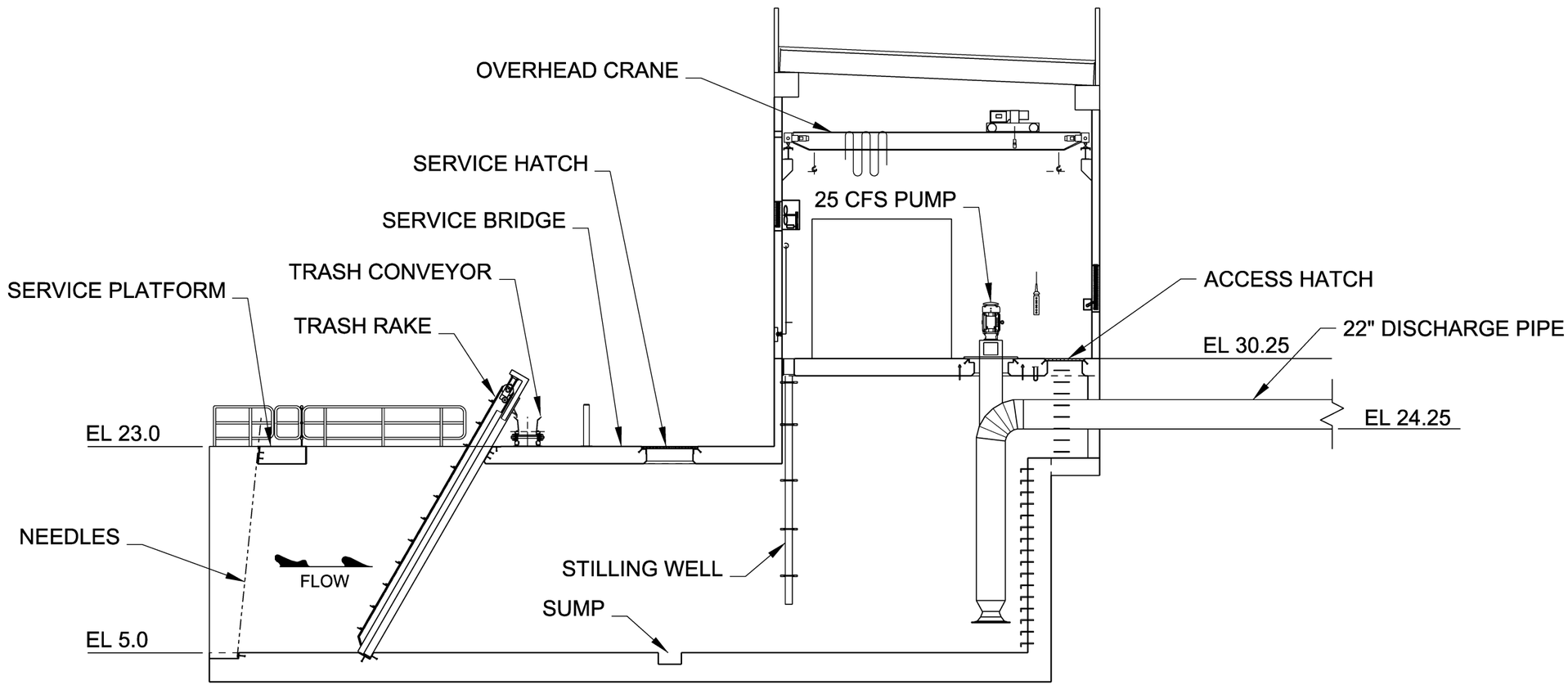

B
P-16

25CFS PUMP SECTION

0 8' 16' 32'

US Army Corps of Engineers

U.S. ARMY CORPS OF ENGINEERS
JACKSONVILLE DISTRICT
JACKSONVILLE, FLORIDA

CENTRAL AND SOUTHERN FLORIDA PROJECTS
COMPREHENSIVE EVERGLADES RESTORATION PROJECT
LOXAHATCHEE RIVER WATERSHED RESTORATION
C-18W RESERVOIR PUMPING STATION S-101A

PLATE NO.
P-18

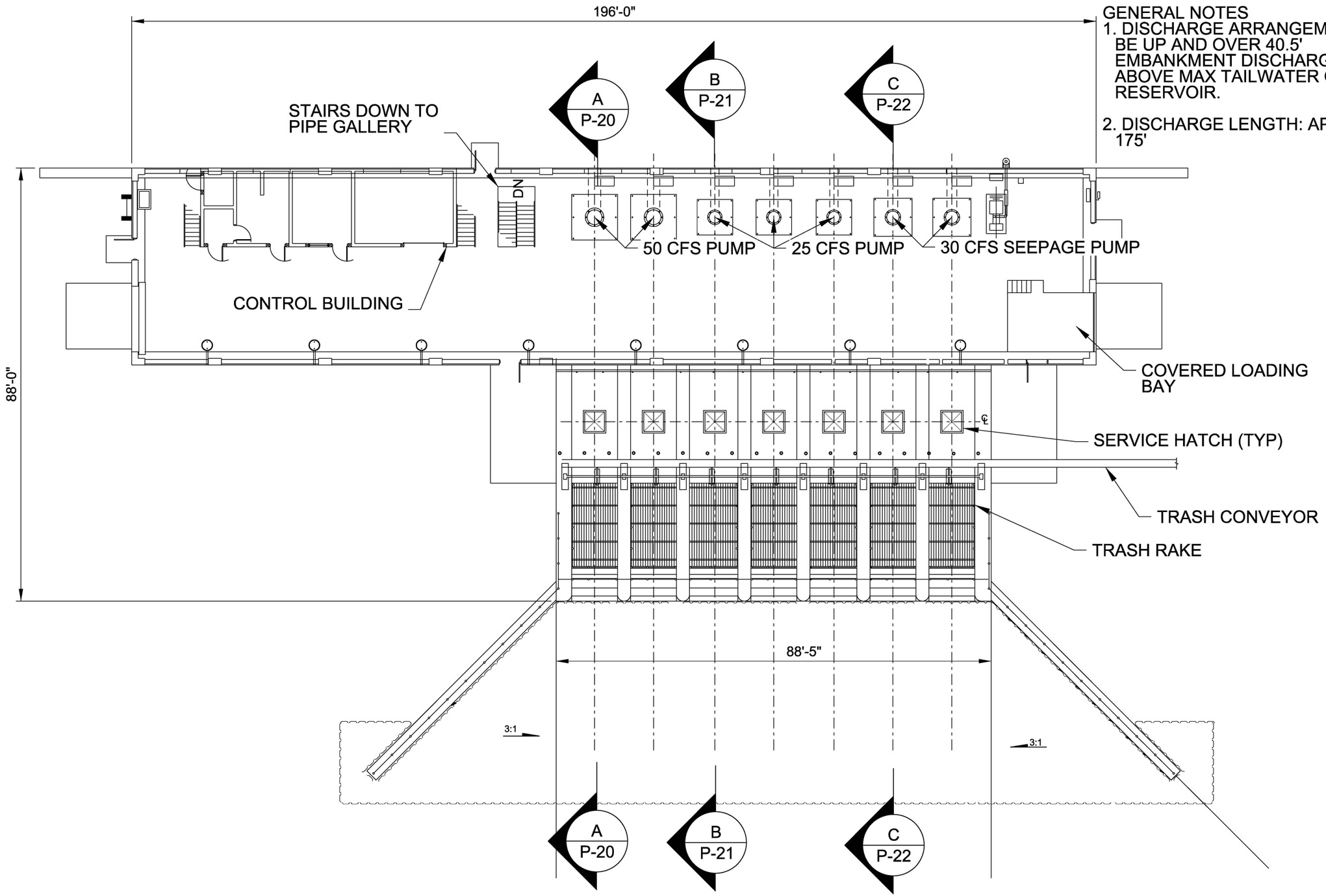

GENERAL NOTES
1. DISCHARGE ARRANGEMENT WILL BE UP AND OVER 40.5' EMBANKMENT DISCHARGING ABOVE MAX TAILWATER OF RESERVOIR.

2. DISCHARGE LENGTH: APPROX. 175'

OPERATING FLOOR PLAN

0 20' 40'

US Army Corps of Engineers

U.S. ARMY CORPS OF ENGINEERS
JACKSONVILLE DISTRICT
JACKSONVILLE, FLORIDA

CENTRAL AND SOUTHERN FLORIDA PROJECTS
COMPREHENSIVE EVERGLADES RESTORATION PROJECT
LOXAHATCHEE RIVER WATERSHED RESTORATION
C-18W RESERVOIR PUMPING STATION S-106

PLATE NO.

P-19

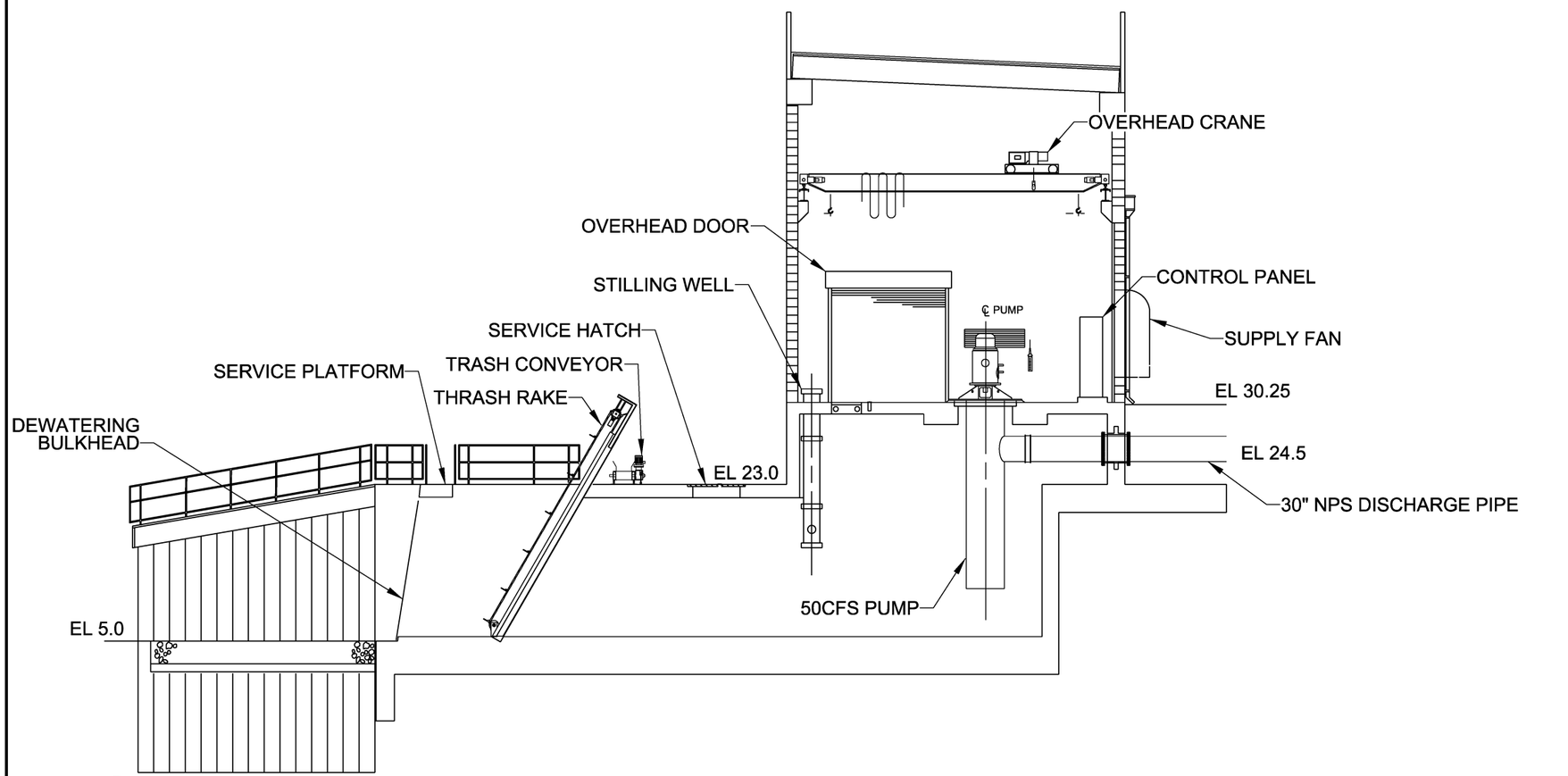

A
P-19

50CFS PUMP SECTION

0 8' 16' 32'

US Army Corps of Engineers

U.S. ARMY CORPS OF ENGINEERS
JACKSONVILLE DISTRICT
JACKSONVILLE, FLORIDA

CENTRAL AND SOUTHERN FLORIDA PROJECTS
COMPREHENSIVE EVERGLADES RESTORATION PROJECT
LOXAHATCHEE RIVER WATERSHED RESTORATION
C-18W RESERVOIR PUMPING STATION S-106

PLATE NO.
P-20

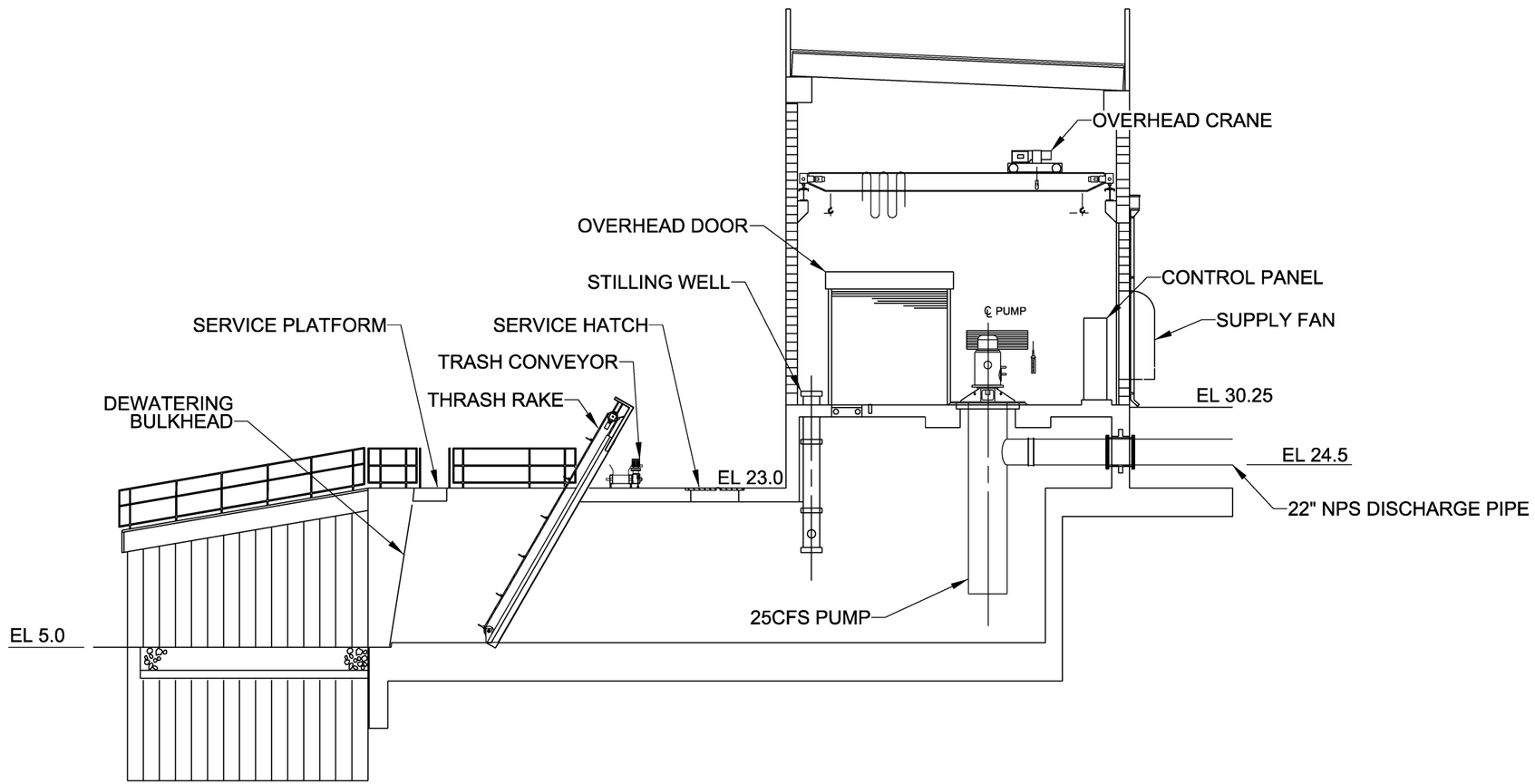

B
P-19

25CFS PUMP SECTION

0 8' 16' 32'

US Army Corps of Engineers

U.S. ARMY CORPS OF ENGINEERS
JACKSONVILLE DISTRICT
JACKSONVILLE, FLORIDA

CENTRAL AND SOUTHERN FLORIDA PROJECTS
COMPREHENSIVE EVERGLADES RESTORATION PROJECT
LOXAHATCHEE RIVER WATERSHED RESTORATION
C-18W RESERVOIR PUMPING STATION S-106

PLATE NO.
P-21

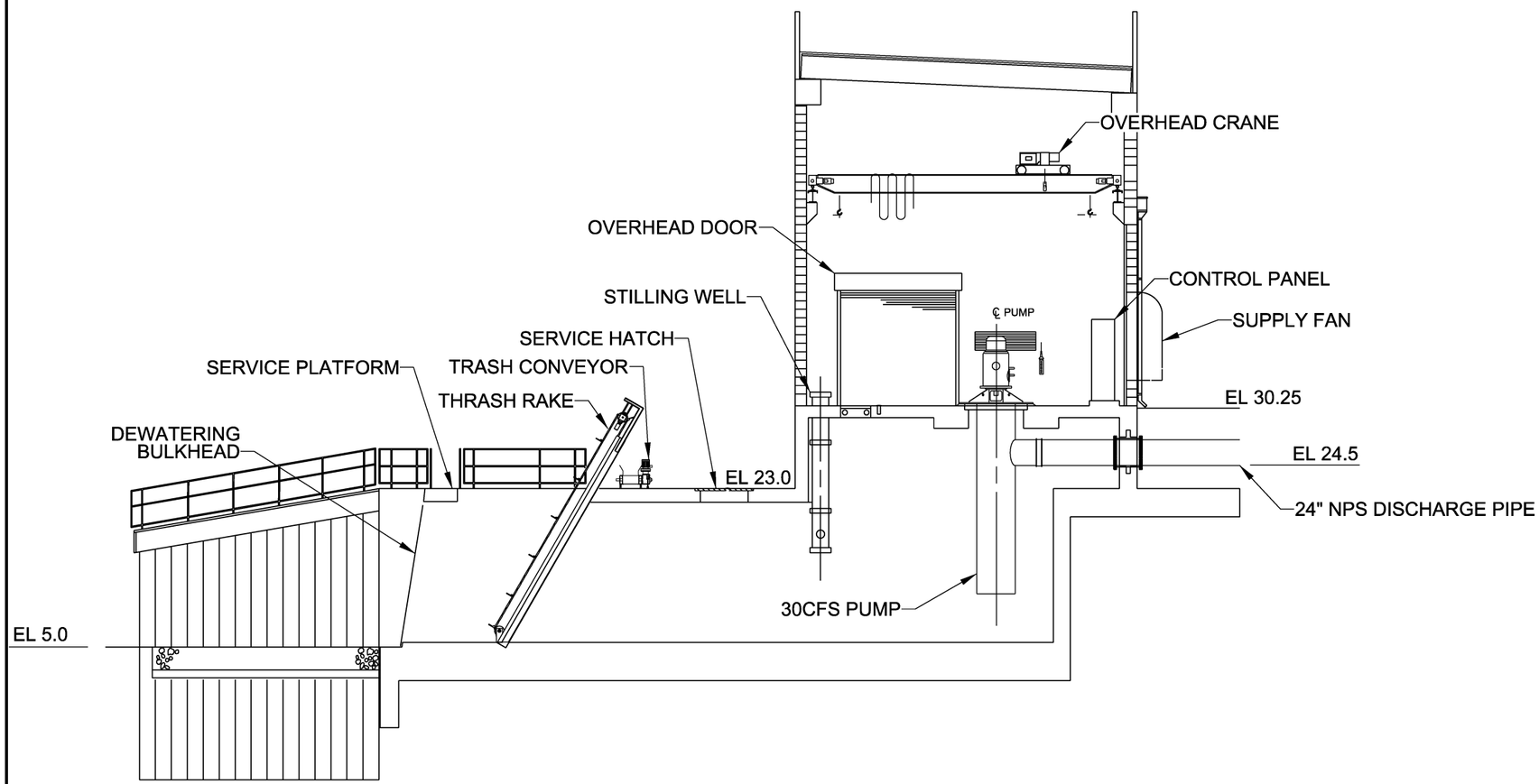

C
P-19

30 CFS PUMP SECTION

0 8' 16' 32'

US Army Corps of Engineers

U.S. ARMY CORPS OF ENGINEERS
JACKSONVILLE DISTRICT
JACKSONVILLE, FLORIDA

CENTRAL AND SOUTHERN FLORIDA PROJECTS
COMPREHENSIVE EVERGLADES RESTORATION PROJECT
LOXAHATCHEE RIVER WATERSHED RESTORATION
C-18W RESERVOIR PUMPING STATION S-106

PLATE NO.

P-22

GENERAL NOTES
- DISCHARGE ARRANGEMENT WILL DISCHARGE ABOVE MAX TAILWATER OF M-0 CONNECTOR CANAL.
- DISCHARGE LENGTH: APPROX. 8'

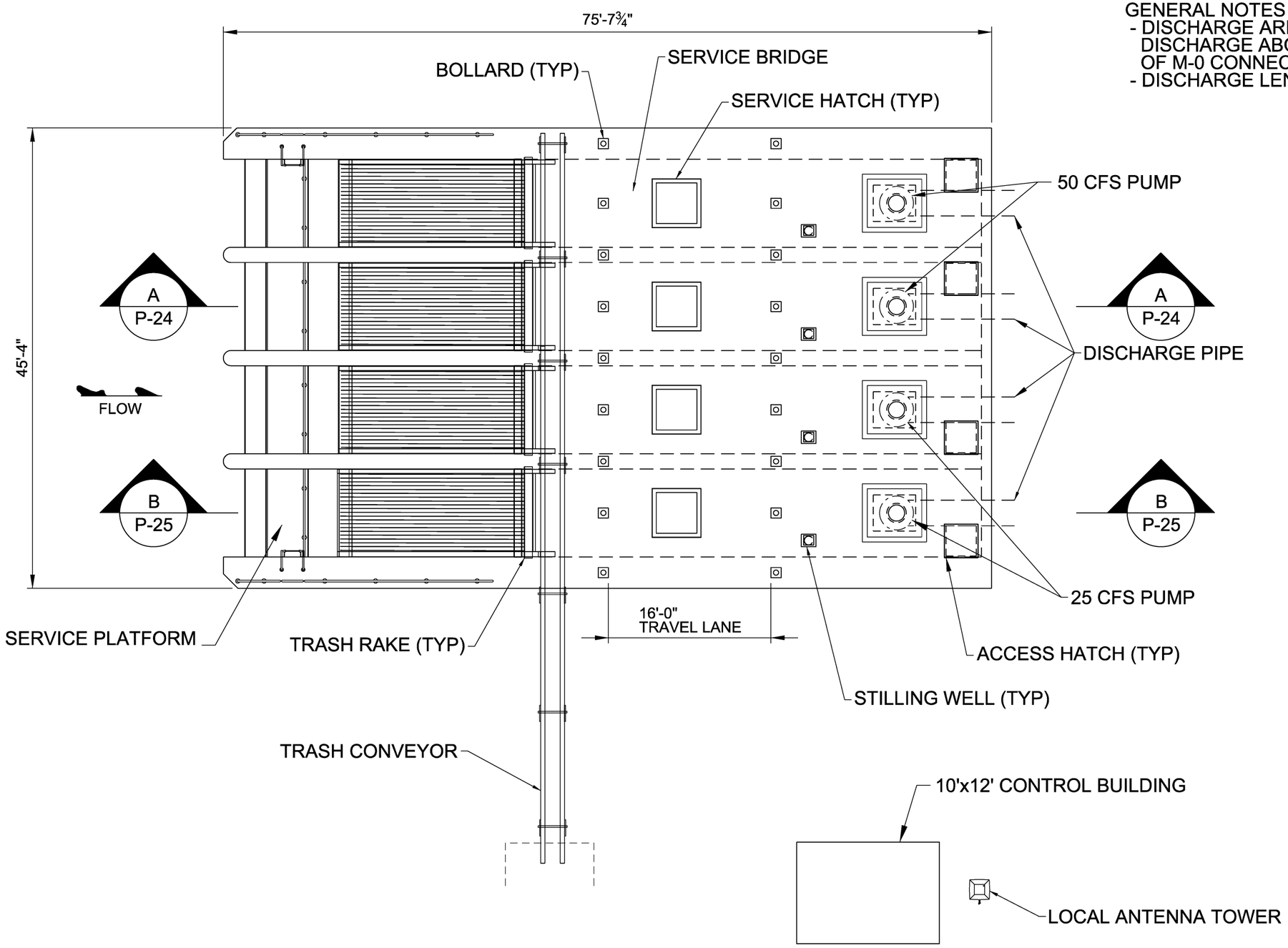

OPERATING FLOOR - PLAN VIEW

0 8' 16' 32'

US Army Corps of Engineers

U.S. ARMY CORPS OF ENGINEERS
JACKSONVILLE DISTRICT
JACKSONVILLE, FLORIDA

CENTRAL AND SOUTHERN FLORIDA PROJECTS
COMPREHENSIVE EVERGLADES RESTORATION PROJECT
LOXAHATCHEE RIVER WATERSHED RESTORATION
M-O CONNECTOR CANAL PUMPING STATION S-109

PLATE NO.
P-23

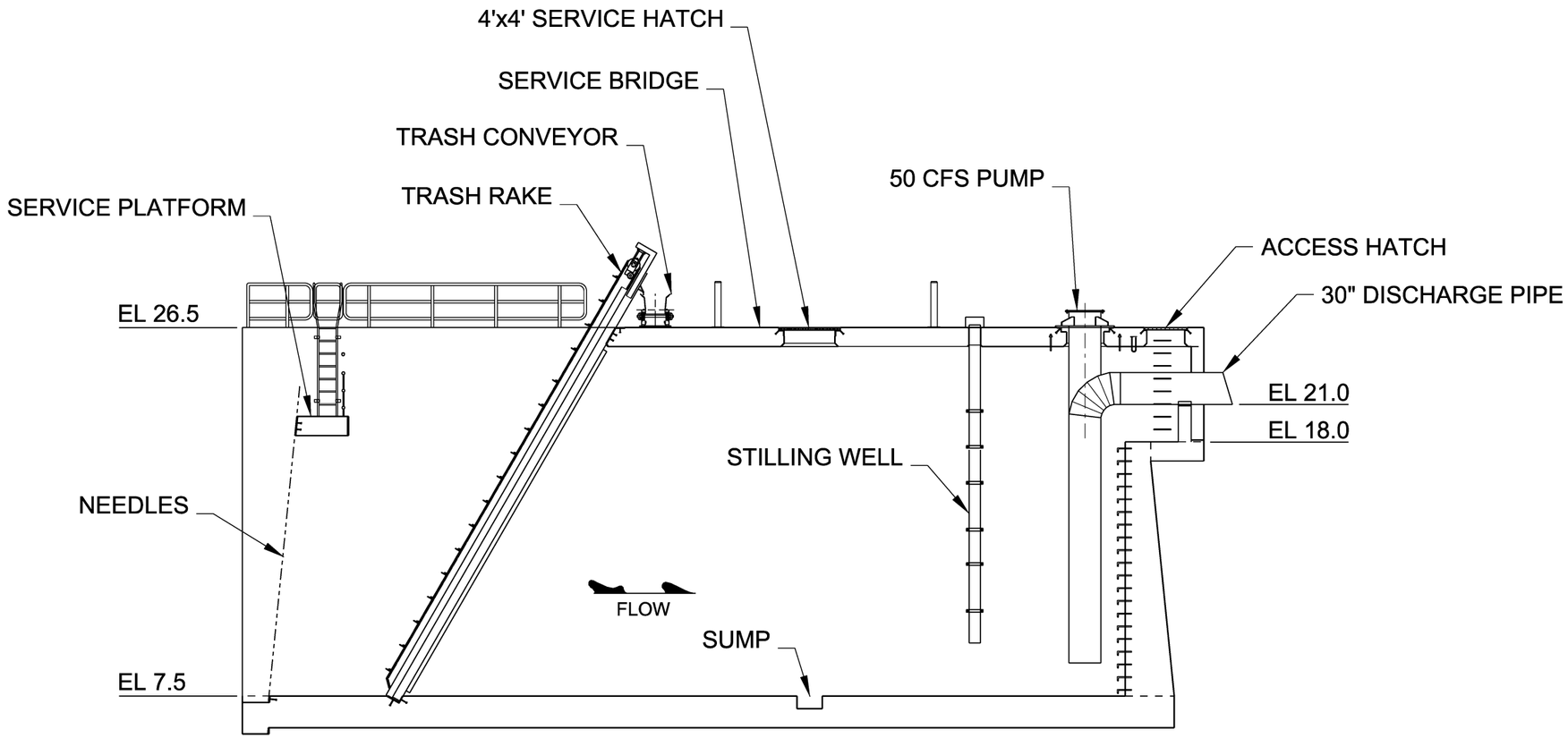

A
P-23

50CFS PUMP SECTION

0 8' 16' 32'

US Army Corps of Engineers

U.S. ARMY CORPS OF ENGINEERS
JACKSONVILLE DISTRICT
JACKSONVILLE, FLORIDA

CENTRAL AND SOUTHERN FLORIDA PROJECTS
COMPREHENSIVE EVERGLADES RESTORATION PROJECT
LOXAHATCHEE RIVER WATERSHED RESTORATION
M-O CONNECTOR CANAL PUMPING STATION S-109

PLATE NO.

P-24

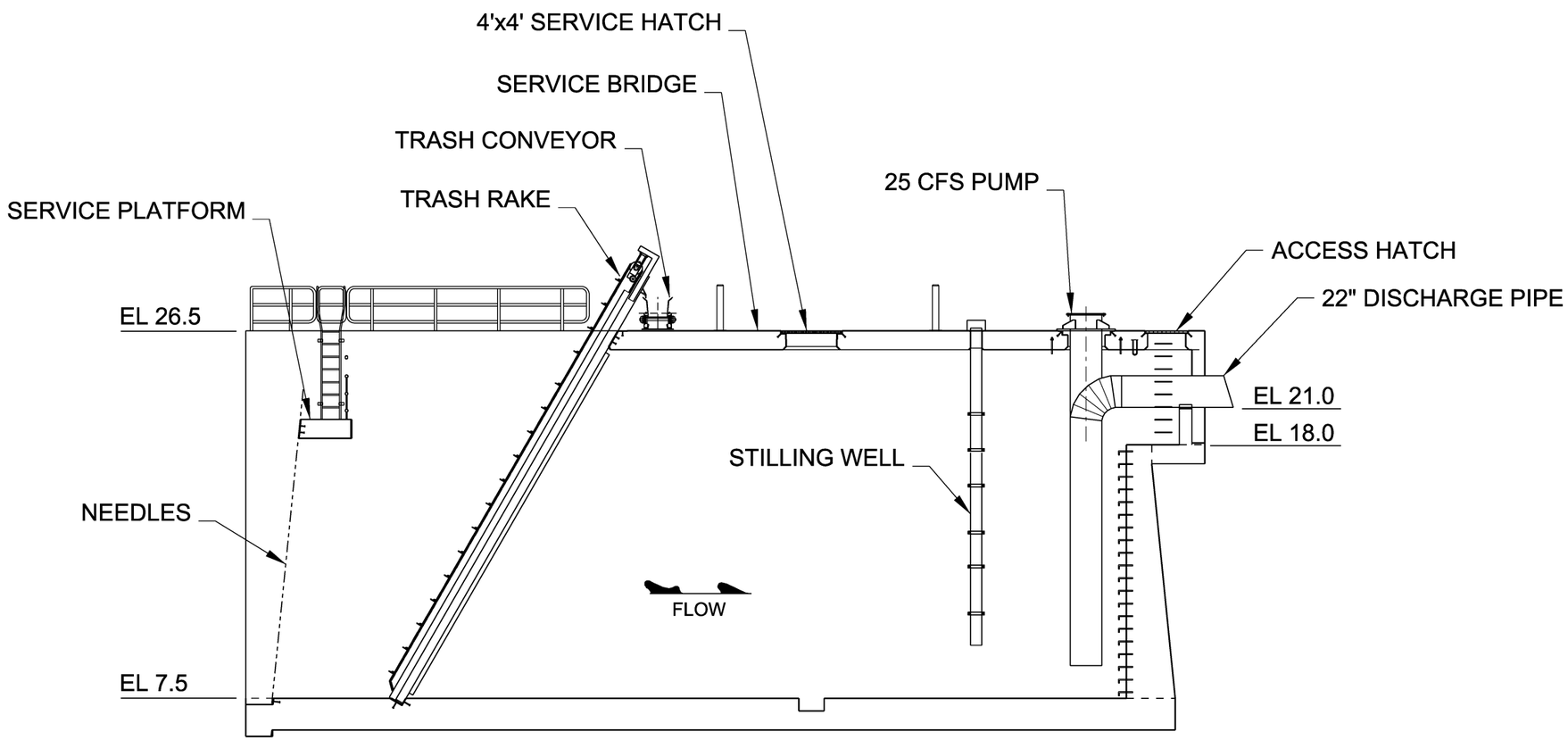

B
P-23

25CFS PUMP SECTION

0 8' 16' 32'

US Army Corps of Engineers

U.S. ARMY CORPS OF ENGINEERS
JACKSONVILLE DISTRICT
JACKSONVILLE, FLORIDA

CENTRAL AND SOUTHERN FLORIDA PROJECTS
COMPREHENSIVE EVERGLADES RESTORATION PROJECT
LOXAHATCHEE RIVER WATERSHED RESTORATION
M-O CONNECTOR CANAL PUMPING STATION S-109

PLATE NO.

P-25

GENERAL NOTES
- DISCHARGE ARRANGEMENT WILL DISCHARGE ABOVE MAX TAILWATER OF M-1 CANAL.
- DISCHARGE LENGTH: APPROX. 200'

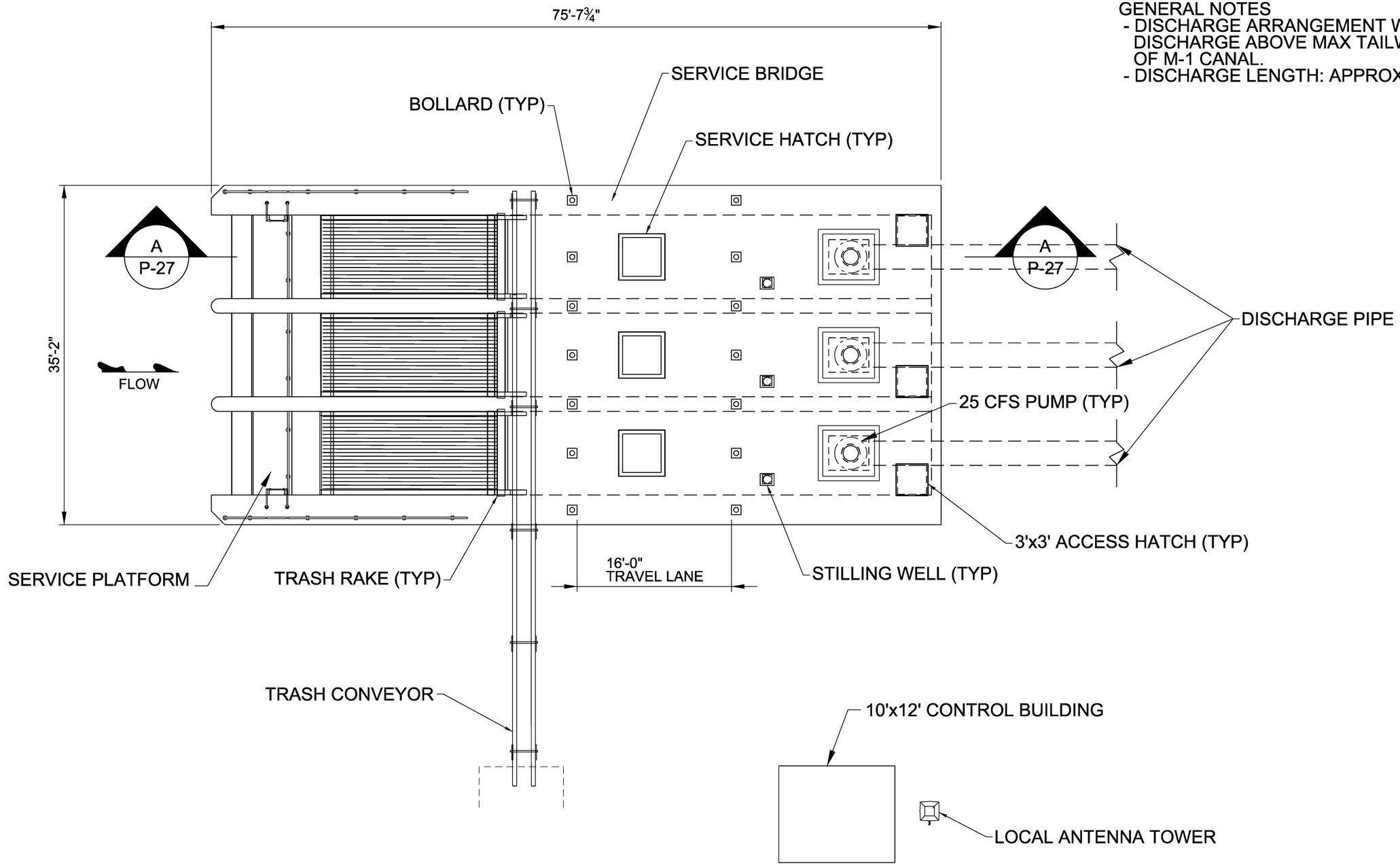

OPERATING DECK PLAN

0 8' 16' 32'

US Army Corps of Engineers

U.S. ARMY CORPS OF ENGINEERS
JACKSONVILLE DISTRICT
JACKSONVILLE, FLORIDA

CENTRAL AND SOUTHERN FLORIDA PROJECTS
COMPREHENSIVE EVERGLADES RESTORATION PROJECT
LOXAHATCHEE RIVER WATERSHED RESTORATION
M-1 PUMP STATION
PUMPING STATION S-100

PLATE NO.
P-26

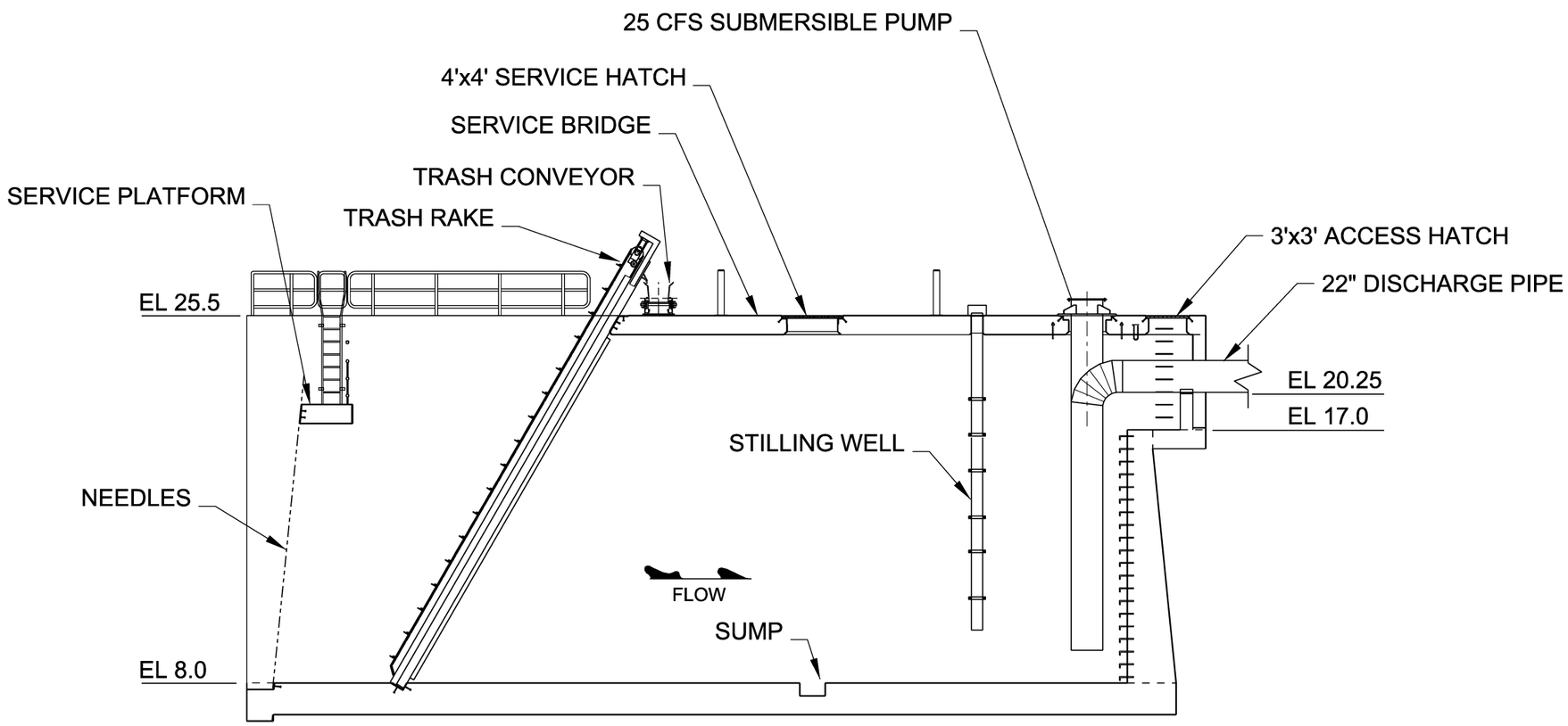

A
P-26

25CFS PUMP SECTION

0 8' 16' 32'

US Army Corps of Engineers

U.S. ARMY CORPS OF ENGINEERS
JACKSONVILLE DISTRICT
JACKSONVILLE, FLORIDA

CENTRAL AND SOUTHERN FLORIDA PROJECTS
COMPREHENSIVE EVERGLADES RESTORATION PROJECT
LOXAHATCHEE RIVER
WATERSHED RESTORATION
M-1 PUMP STATION
PUMPING STATION S-100

PLATE NO.

P-27

GENERAL NOTES
- DISCHARGE ARRANGEMENT WILL DISCHARGE INTO DISCHARGE WEIR.
- DISCHARGE LENGTH: APPROX. 25'
- PUMP STATION WILL NOT HAVE TRASH RAKE

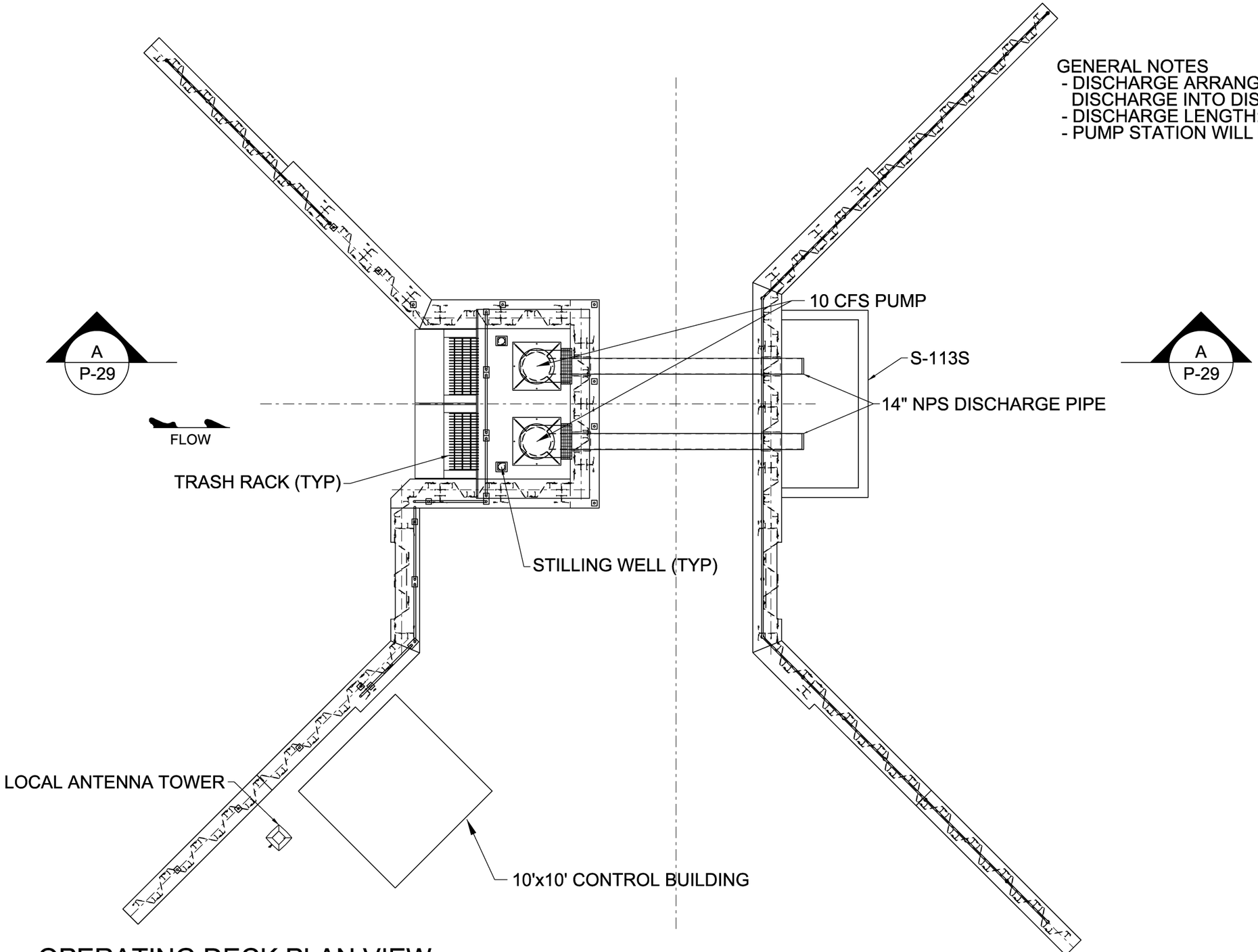

OPERATING DECK PLAN VIEW

0 8' 16' 32'

US Army Corps of Engineers

U.S. ARMY CORPS OF ENGINEERS
JACKSONVILLE DISTRICT
JACKSONVILLE, FLORIDA

CENTRAL AND SOUTHERN FLORIDA PROJECTS
COMPREHENSIVE EVERGLADES RESTORATION PROJECT
LOXAHATCHEE RIVER WATERSHED RESTORATION
MACK DAIRY SPREADER PUMPING STATION S-113N

PLATE NO.
P-28

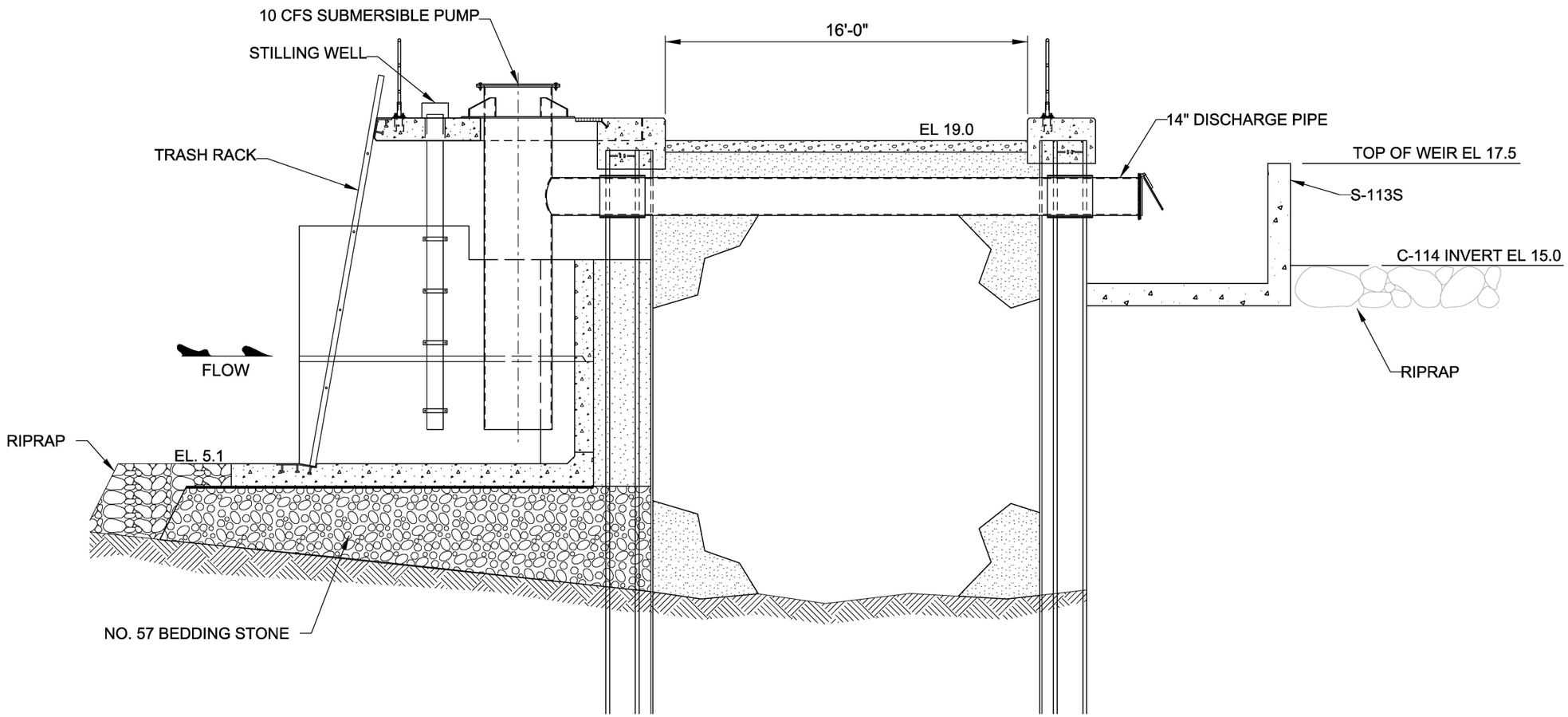

A
P-28

PUMP SECTION

0 4' 8' 16'

US Army Corps of Engineers

U.S. ARMY CORPS OF ENGINEERS
JACKSONVILLE DISTRICT
JACKSONVILLE, FLORIDA

CENTRAL AND SOUTHERN FLORIDA PROJECTS
COMPREHENSIVE EVERGLADES RESTORATION PROJECT
LOXAHATCHEE RIVER WATERSHED RESTORATION
MACK DAIRY SPREADER PUMPING STATION S-113N

PLATE NO.

P-29

GENERAL NOTES
- DISCHARGE ARRANGEMENT WILL DISCHARGE ABOVE MAX TAILWATER OF FLOW THROUGH MARSH.
- DISCHARGE LENGTH: APPROX. 8'

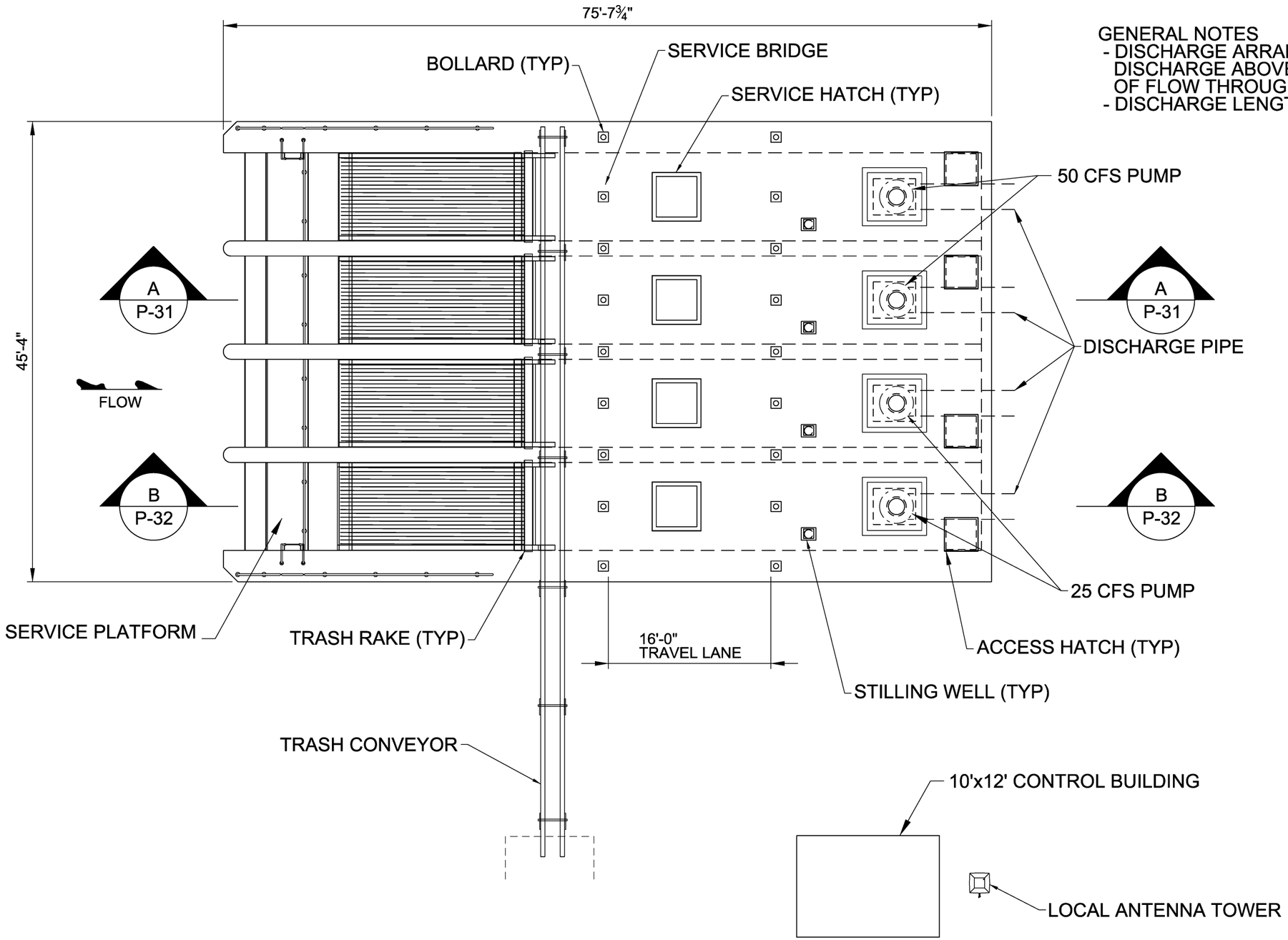

OPERATING FLOOR PLAN VIEW

0 8' 16' 32'

US Army Corps of Engineers

U.S. ARMY CORPS OF ENGINEERS
JACKSONVILLE DISTRICT
JACKSONVILLE, FLORIDA

CENTRAL AND SOUTHERN FLORIDA PROJECTS
COMPREHENSIVE EVERGLADES RESTORATION PROJECT
LOXAHATCHEE RIVER WATERSHED RESTORATION
GULF STREAM WEST PUMPING STATION S-110

PLATE NO.
P-30

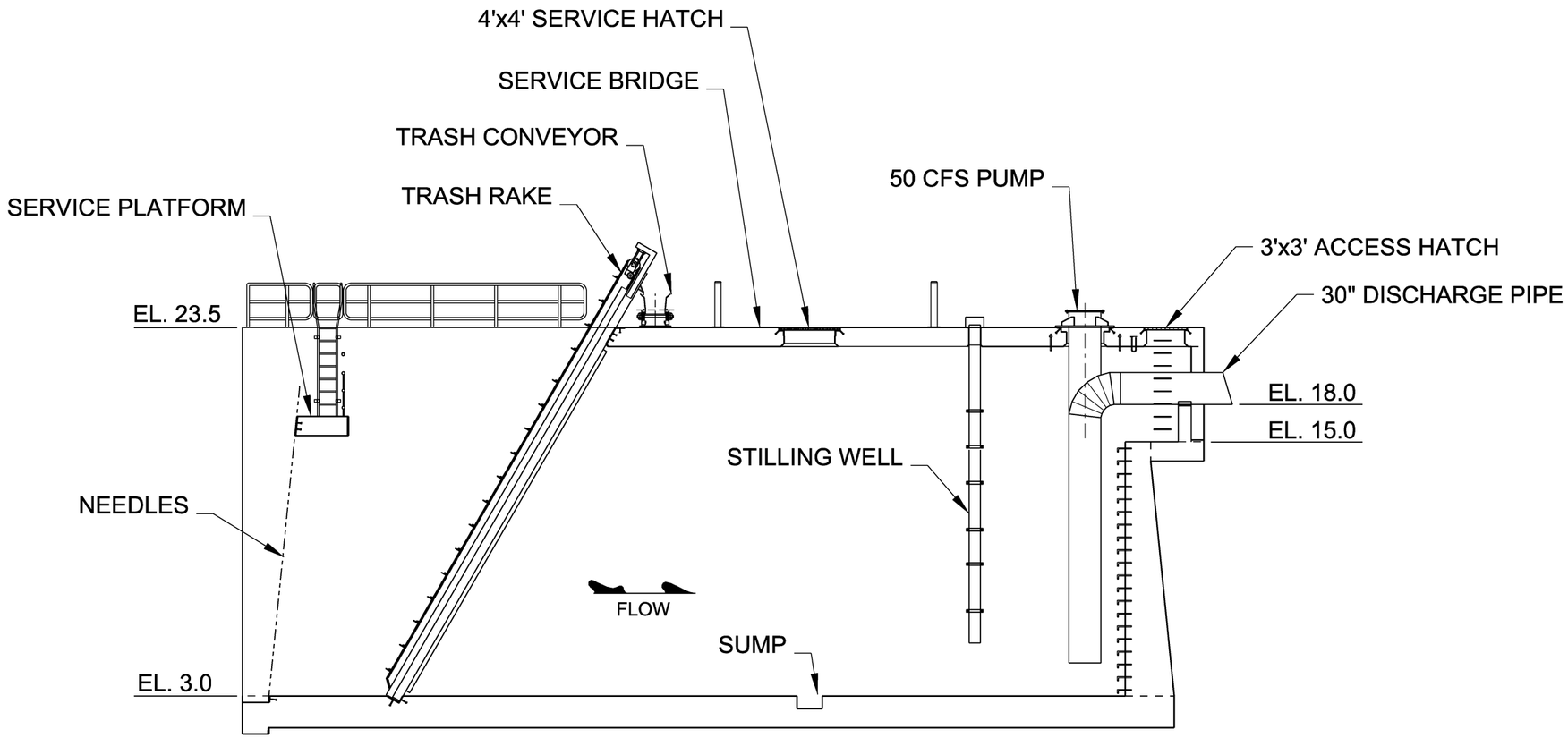

A
P-30

50CFS PUMP SECTION

0 8' 16' 32'

US Army Corps of Engineers

U.S. ARMY CORPS OF ENGINEERS
JACKSONVILLE DISTRICT
JACKSONVILLE, FLORIDA

CENTRAL AND SOUTHERN FLORIDA PROJECTS
COMPREHENSIVE EVERGLADES RESTORATION PROJECT
LOXAHATCHEE RIVER WATERSHED RESTORATION
GULF STREAM WEST PUMPING STATION S-110

PLATE NO.

P-31

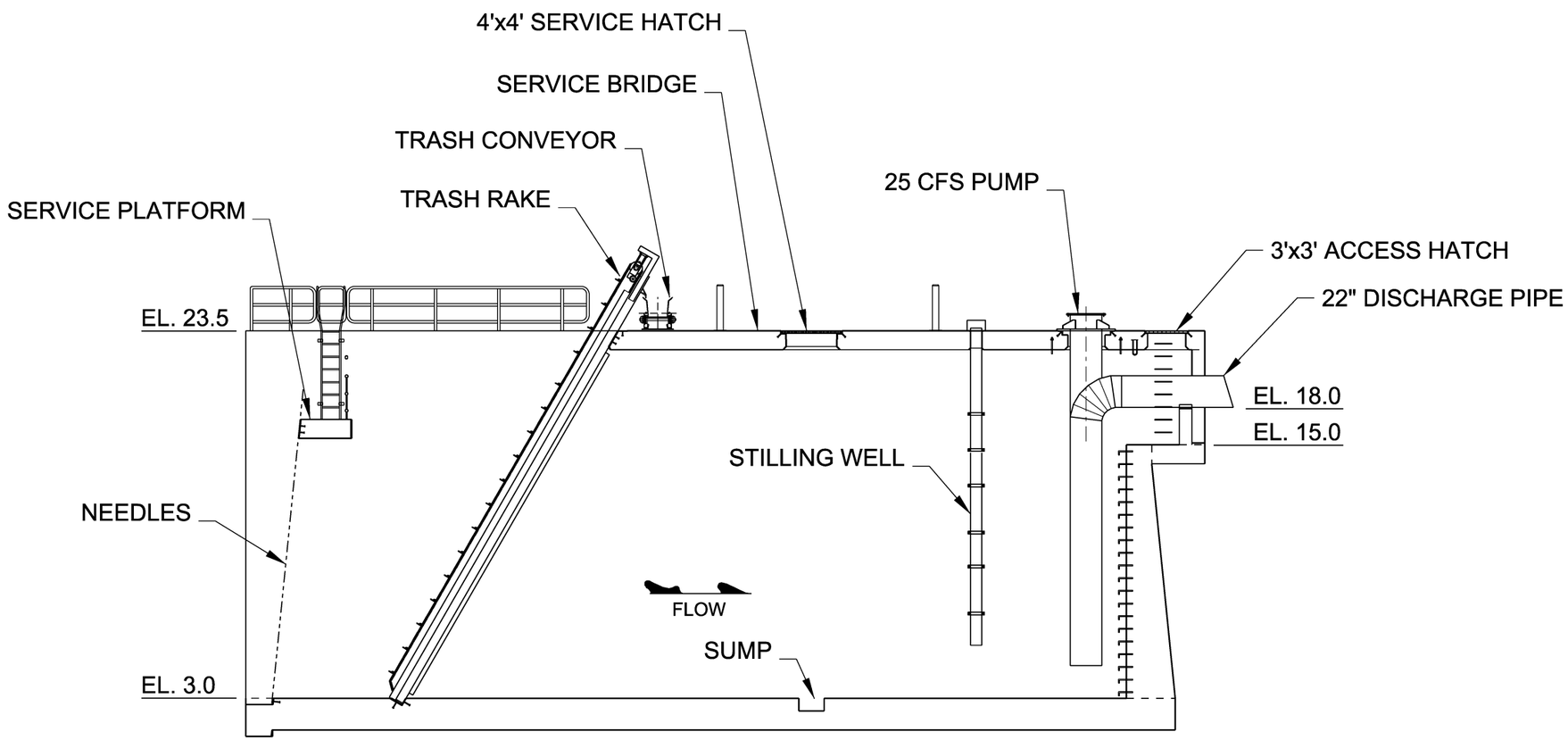

B
P-30

25CFS PUMP SECTION

0 8' 16' 32'

US Army Corps of Engineers

U.S. ARMY CORPS OF ENGINEERS
JACKSONVILLE DISTRICT
JACKSONVILLE, FLORIDA

CENTRAL AND SOUTHERN FLORIDA PROJECTS
COMPREHENSIVE EVERGLADES RESTORATION PROJECT
LOXAHATCHEE RIVER WATERSHED RESTORATION
GULF STREAM WEST PUMPING STATION S-110

PLATE NO.
P-32

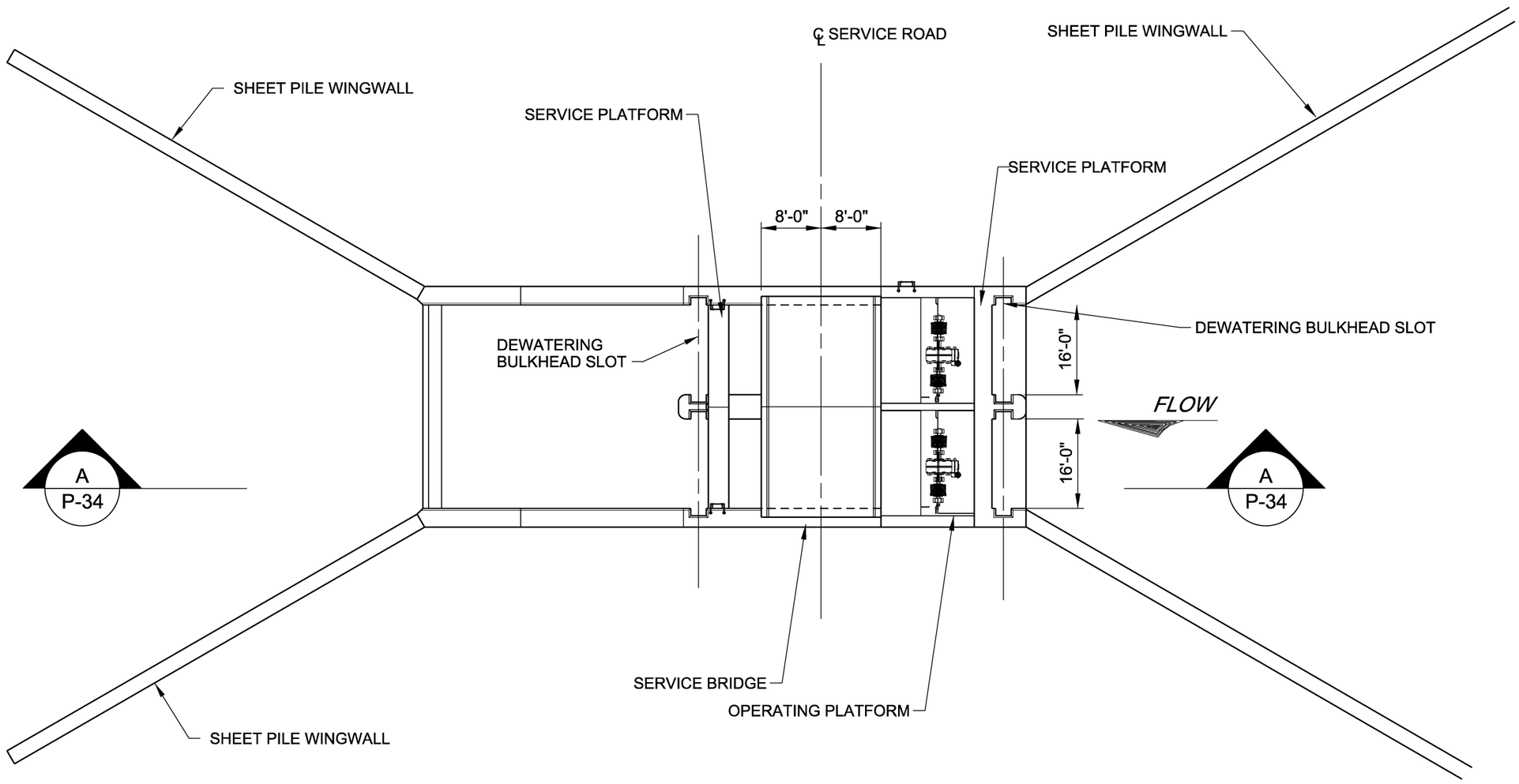

DISCHARGE SPILLWAY - PLAN

0 8' 16' 32'

US Army Corps of Engineers

U.S. ARMY CORPS OF ENGINEERS
JACKSONVILLE DISTRICT
JACKSONVILLE, FLORIDA

CENTRAL AND SOUTHERN FLORIDA PROJECTS
COMPREHENSIVE EVERGLADES RESTORATION PROJECT
LOXAHATCHEE RIVER WATERSHED RESTORATION
CYPRESS CREEK CANAL EXPANSION
DISCHARGE SPILLWAY S-112

PLATE NO.

P-33

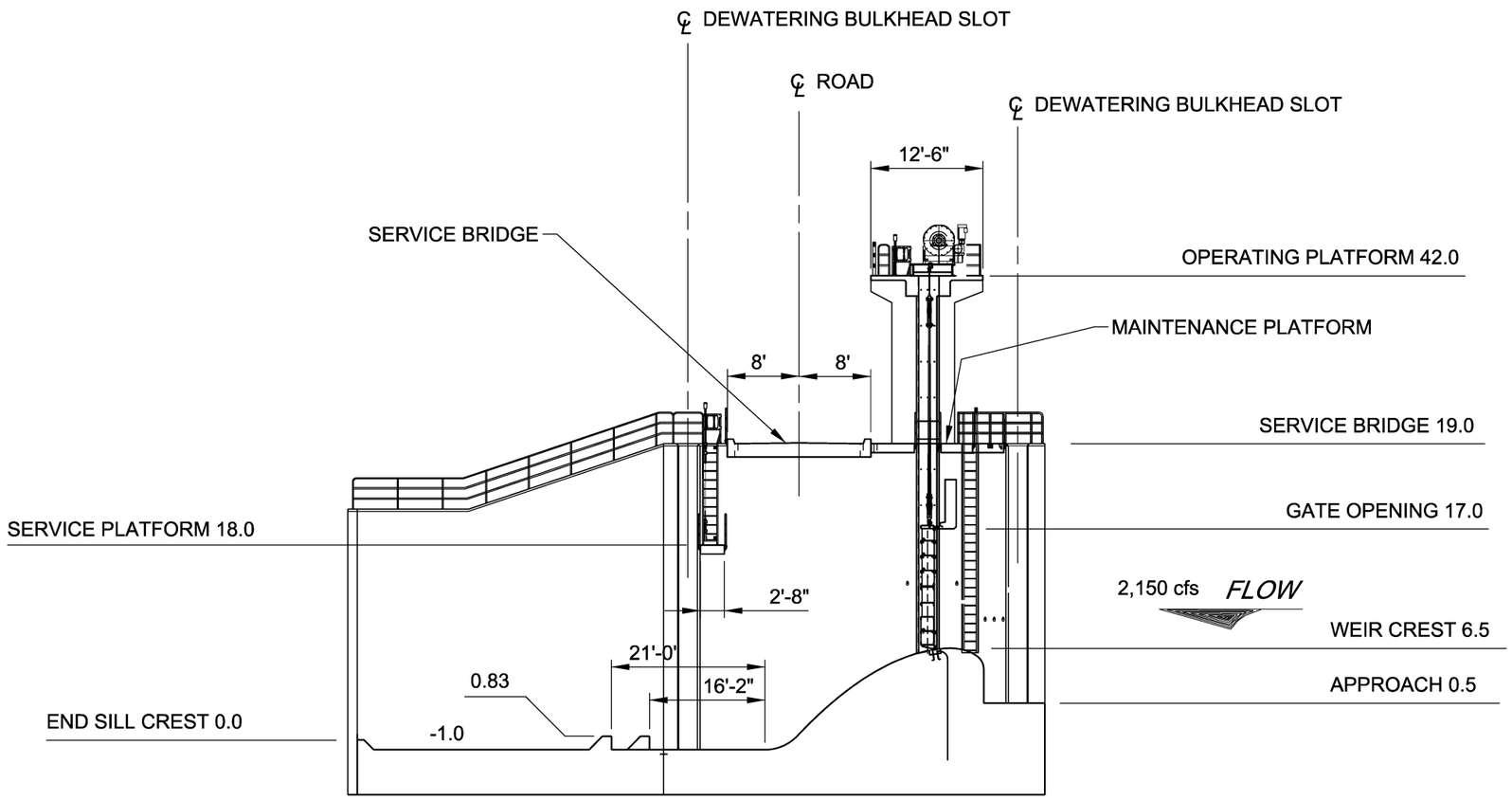

A
P-33

DISCHARGE SPILLWAY SECTION

0 8' 16' 32'

US Army Corps of Engineers

U.S. ARMY CORPS OF ENGINEERS
JACKSONVILLE DISTRICT
JACKSONVILLE, FLORIDA

CENTRAL AND SOUTHERN FLORIDA PROJECTS
COMPREHENSIVE EVERGLADES RESTORATION PROJECT
LOXAHATCHEE RIVER WATERSHED RESTORATION
CYPRESS CREEK CANAL EXPANSION DISCHARGE SPILLWAY S-112

PLATE NO.
P-34

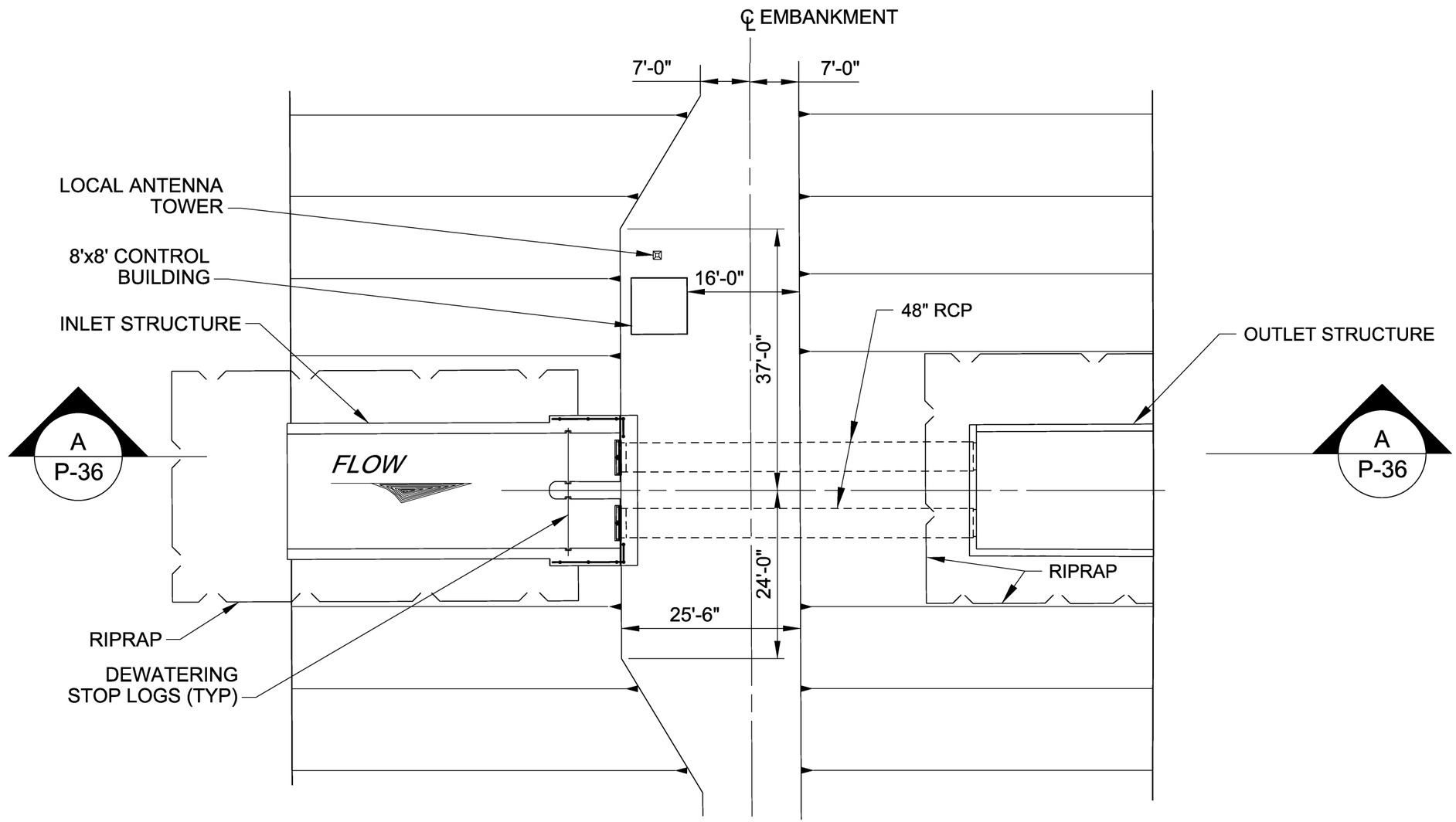

PLAN

0 20' 40'

US Army Corps of Engineers

U.S. ARMY CORPS OF ENGINEERS
JACKSONVILLE DISTRICT
JACKSONVILLE, FLORIDA

CENTRAL AND SOUTHERN FLORIDA PROJECTS
COMPREHENSIVE EVERGLADES RESTORATION PROJECT
LOXAHATCHEE RIVER WATERSHED RESTORATION
C-18W RESERVOIR DISCHARGE STRUCTURE S-102

PLATE NO.

P-35

NOTE:
CULVERT SEEPAGE CONTROL MEASURES NOT SHOWN FOR CLARITY. FOR DETAILS SEE WRTIEUP IN ENGINEERING APPENDIX.

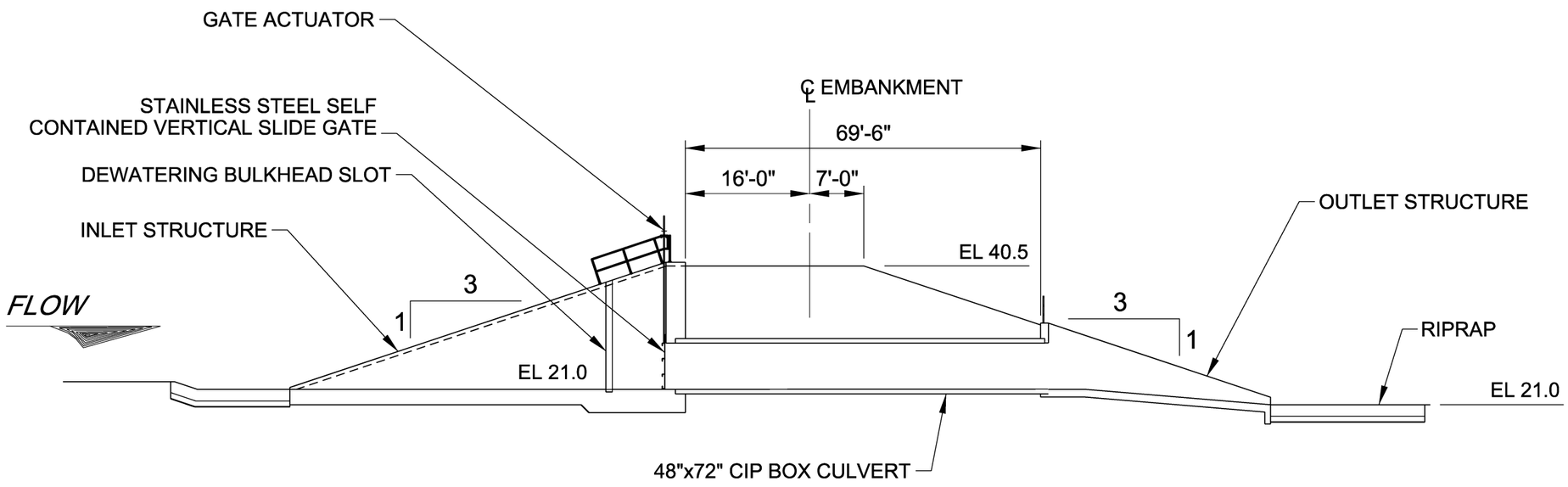

A
P-35

PROFILE SECTION

0 20' 40'

US Army Corps of Engineers

U.S. ARMY CORPS OF ENGINEERS
JACKSONVILLE DISTRICT
JACKSONVILLE, FLORIDA

CENTRAL AND SOUTHERN FLORIDA PROJECTS
COMPREHENSIVE EVERGLADES RESTORATION PROJECT
LOXAHATCHEE RIVER WATERSHED RESTORATION
C-18W RESERVOIR
DISCHARGE STRUCTURE S-102

PLATE NO.
P-36

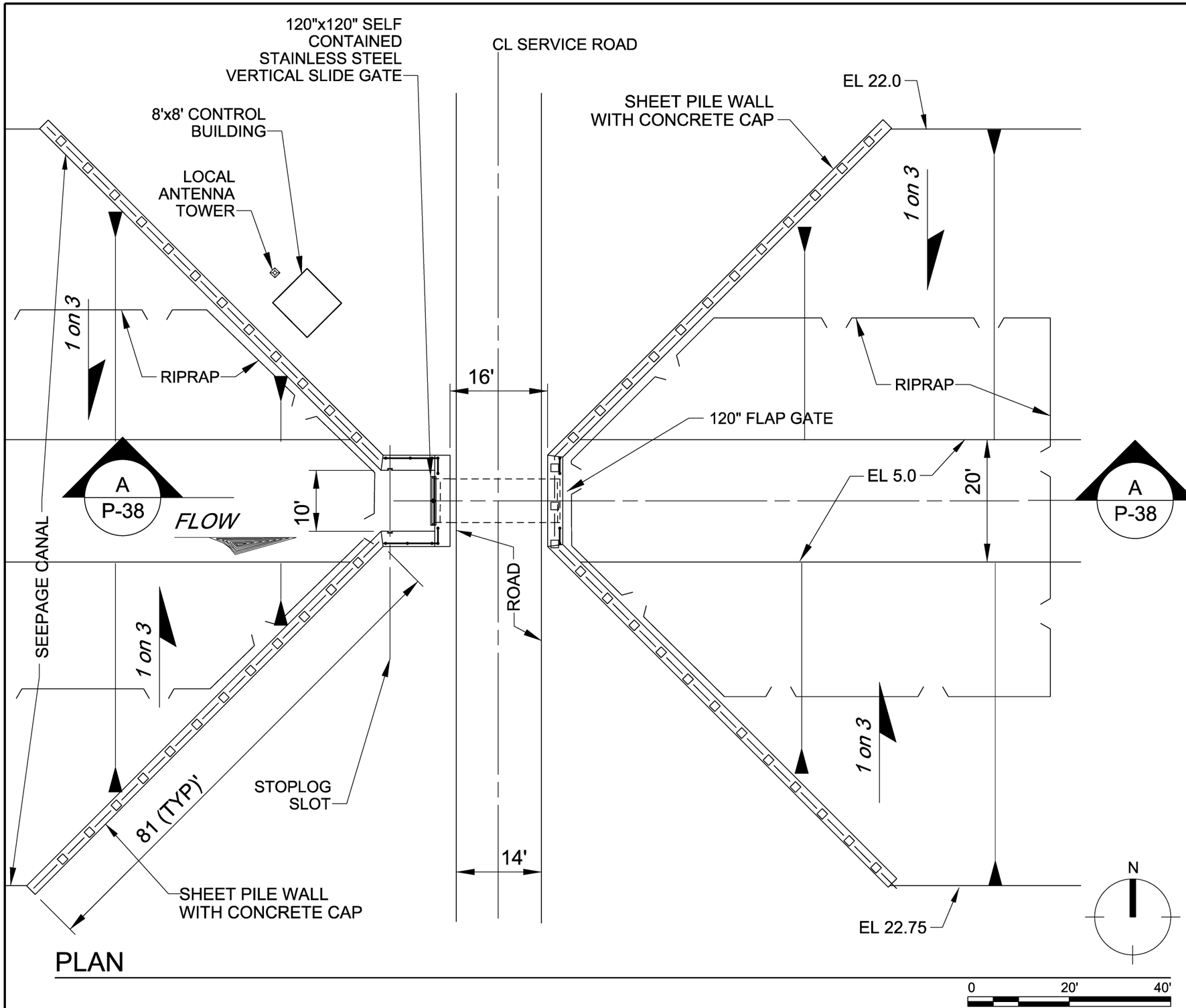

PLAN

US Army Corps of Engineers

U.S. ARMY CORPS OF ENGINEERS
JACKSONVILLE DISTRICT
JACKSONVILLE, FLORIDA

CENTRAL AND SOUTHERN FLORIDA PROJECTS
COMPREHENSIVE EVERGLADES RESTORATION PROJECT
LOXAHATCHEE RIVER WATERSHED RESTORATION
C-18W RESERVOIR
CULVERTS S-103E AND S-103W

PLATE NO.

P-37

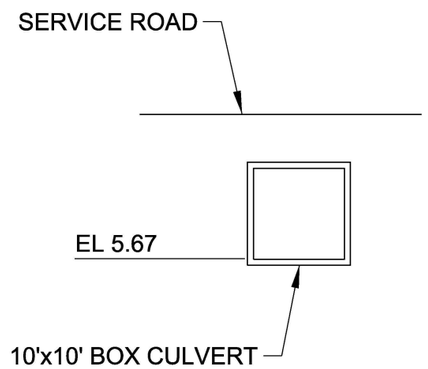

B
P-37

TYPICAL CROSS SECTION

0 20' 40'

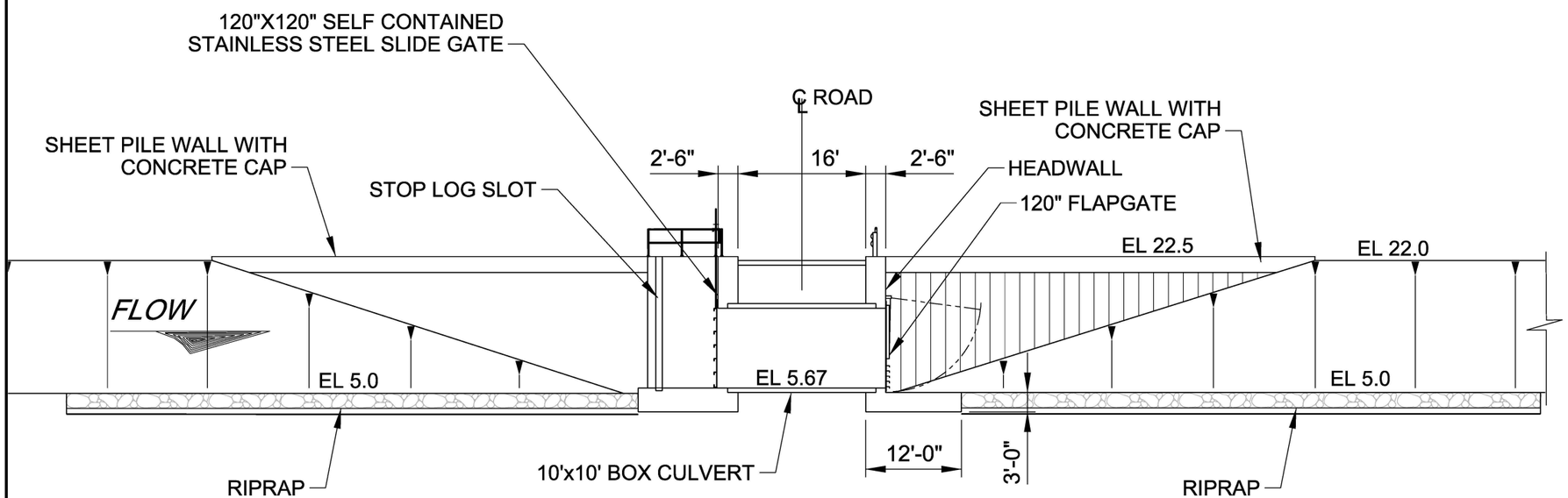

A
P-37

PROFILE SECTION

0 20' 40'

US Army Corps of Engineers

U.S. ARMY CORPS OF ENGINEERS
JACKSONVILLE DISTRICT
JACKSONVILLE, FLORIDA

CENTRAL AND SOUTHERN FLORIDA PROJECTS
COMPREHENSIVE EVERGLADES RESTORATION PROJECT
LOXAHATCHEE RIVER
WATERSHED RESTORATION
C-18W RESERVOIR
CULVERTS S-103E AND S-103W

PLATE NO.

P-38

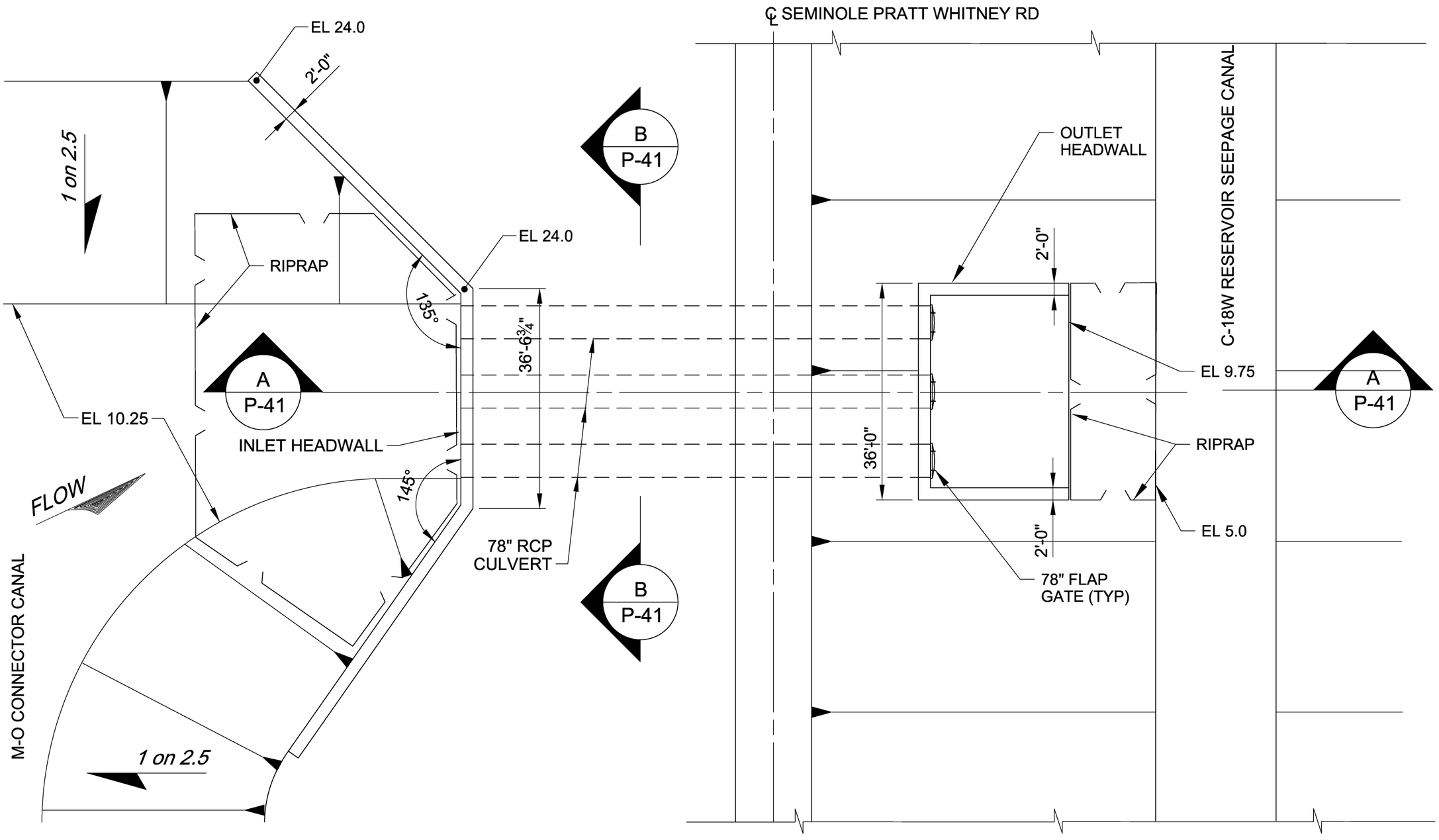

PLAN

US Army Corps of Engineers

U.S. ARMY CORPS OF ENGINEERS
JACKSONVILLE DISTRICT
JACKSONVILLE, FLORIDA

CENTRAL AND SOUTHERN FLORIDA PROJECTS
COMPREHENSIVE EVERGLADES RESTORATION PROJECT
LOXAHATCHEE RIVER
WATERSHED RESTORATION
C-18W RESERVOIR
CULVERT S-105

PLATE NO.

P-40

NOTE:
CULVERT SEEPAGE CONTROL MEASURES NOT SHOWN FOR CLARITY. FOR DETAILS SEE WRTIEUP IN ENGINEERING APPENDIX.

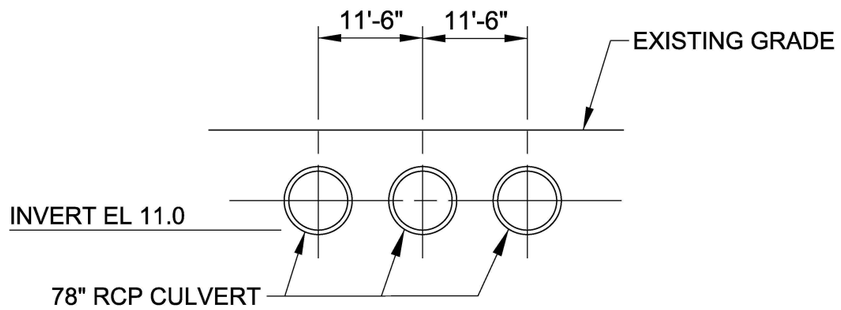

B / P-40 PIPE CROSS SECTION

SCALE: 0 20' 40'

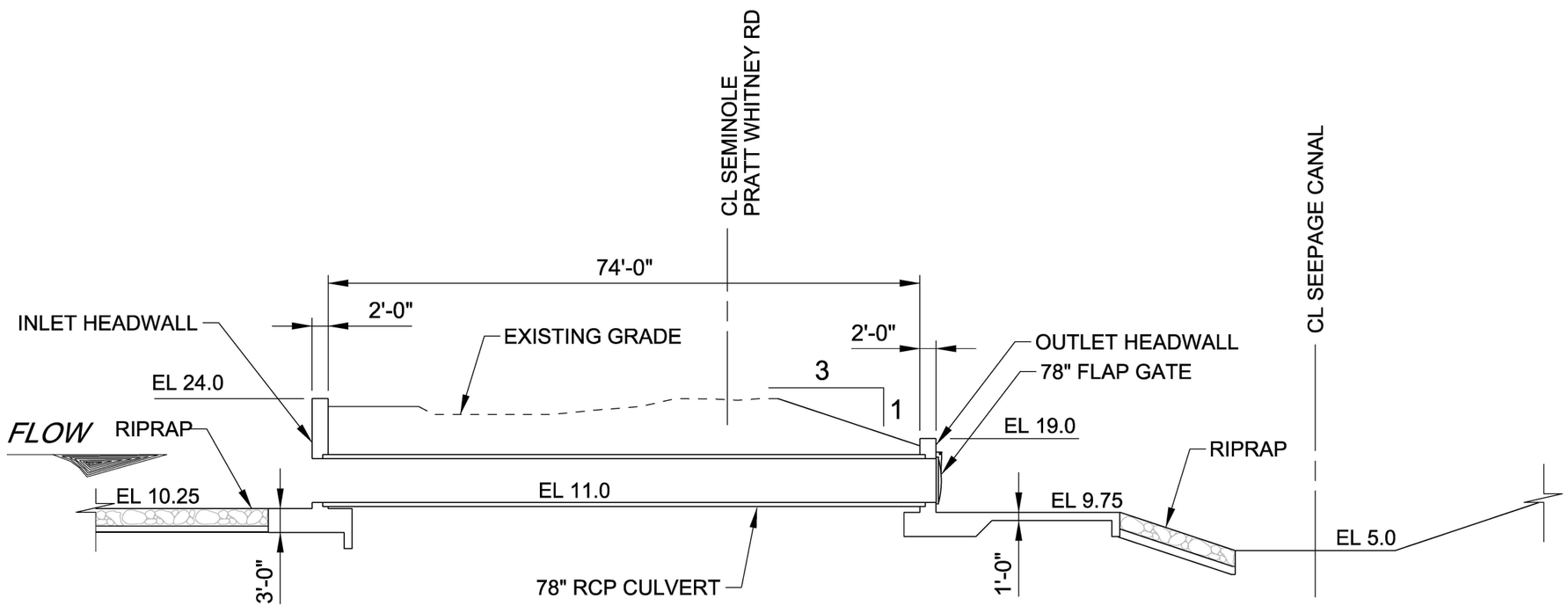

A / P-40 PROFILE SECTION

0 20' 40'

US Army Corps of Engineers

U.S. ARMY CORPS OF ENGINEERS
JACKSONVILLE DISTRICT
JACKSONVILLE, FLORIDA

CENTRAL AND SOUTHERN FLORIDA PROJECTS
COMPREHENSIVE EVERGLADES RESTORATION PROJECT
LOXAHATCHEE RIVER WATERSHED RESTORATION
C-18W RESERVOIR CULVERT S-105

PLATE NO.
P-41

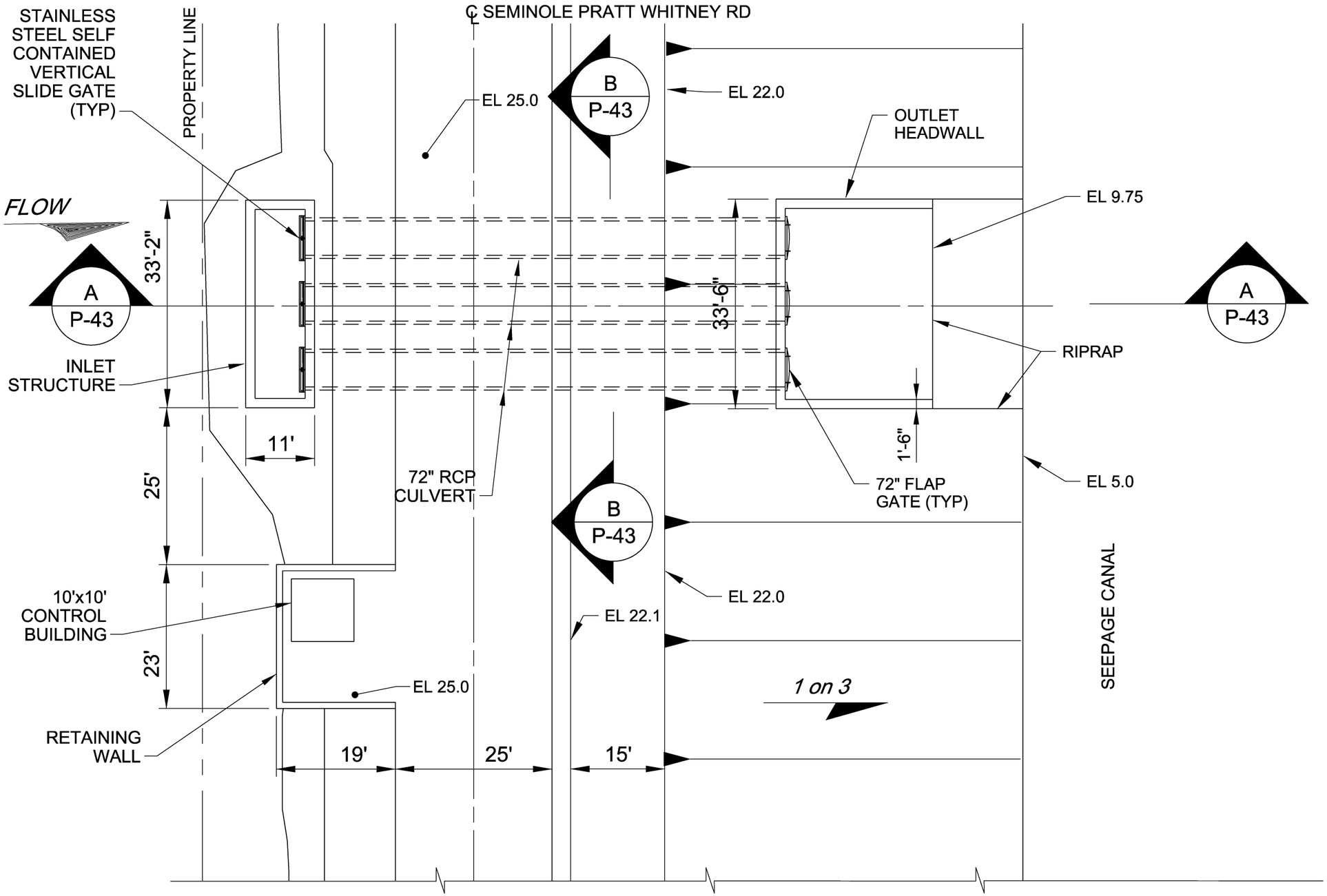

PLAN

0 20' 40'

US Army Corps of Engineers

U.S. ARMY CORPS OF ENGINEERS
JACKSONVILLE DISTRICT
JACKSONVILLE, FLORIDA

CENTRAL AND SOUTHERN FLORIDA PROJECTS
COMPREHENSIVE EVERGLADES RESTORATION PROJECT
LOXAHATCHEE RIVER WATERSHED RESTORATION
C-18W RESERVOIR CULVERT S-107

PLATE NO.

P-42

NOTE:
CULVERT SEEPAGE CONTROL MEASURES NOT SHOWN FOR CLARITY. FOR DETAILS SEE WRTIEUP IN ENGINEERING APPENDIX.

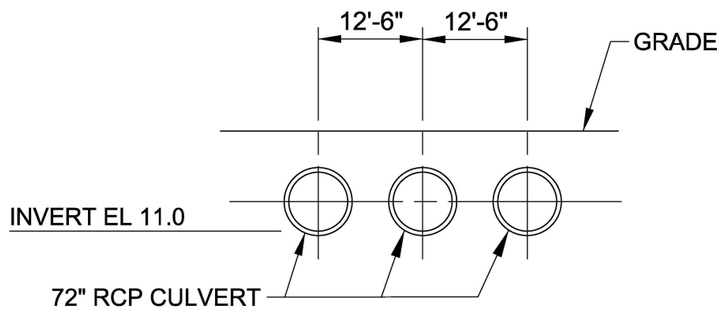

B
P-42

PIPE CROSS SECTION

0 20' 40'

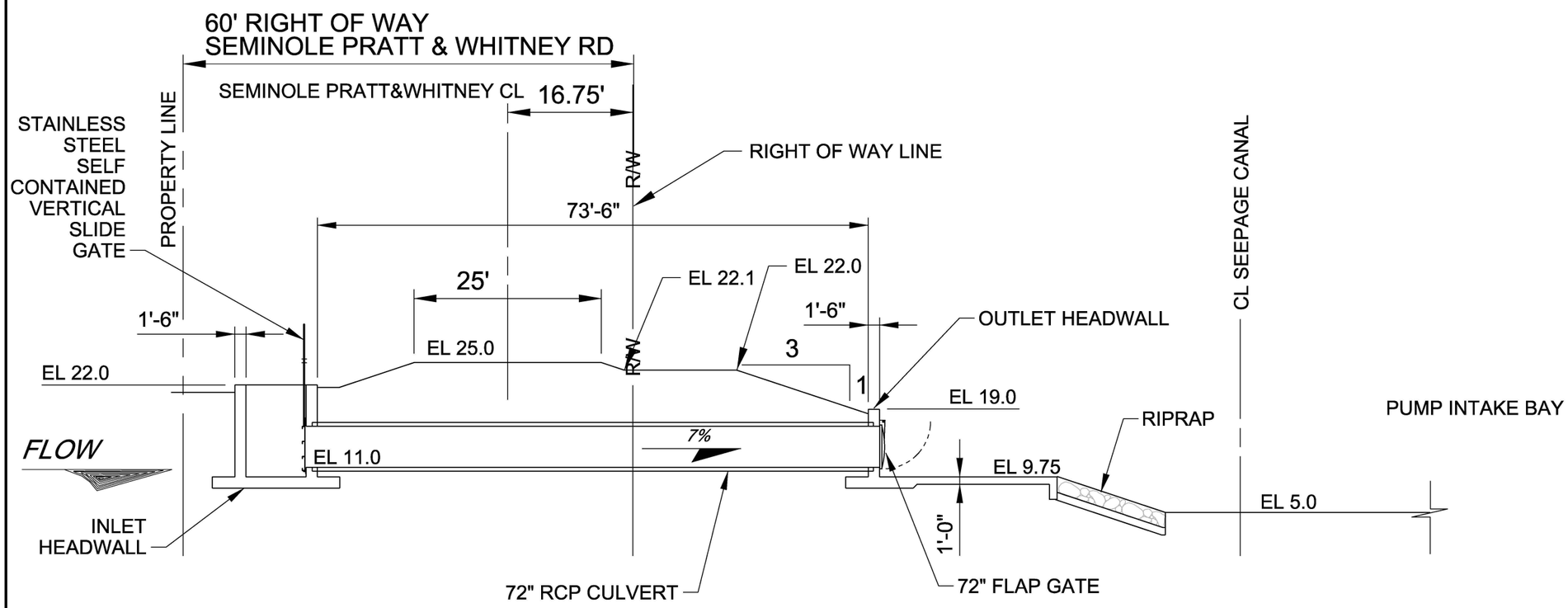

A
P-42

PROFILE SECTION

0 20' 40'

US Army Corps of Engineers

U.S. ARMY CORPS OF ENGINEERS
JACKSONVILLE DISTRICT
JACKSONVILLE, FLORIDA

CENTRAL AND SOUTHERN FLORIDA PROJECTS
COMPREHENSIVE EVERGLADES RESTORATION PROJECT
LOXAHATCHEE RIVER WATERSHED RESTORATION
C-18W RESERVOIR CULVERT S-107

PLATE NO.
P-43

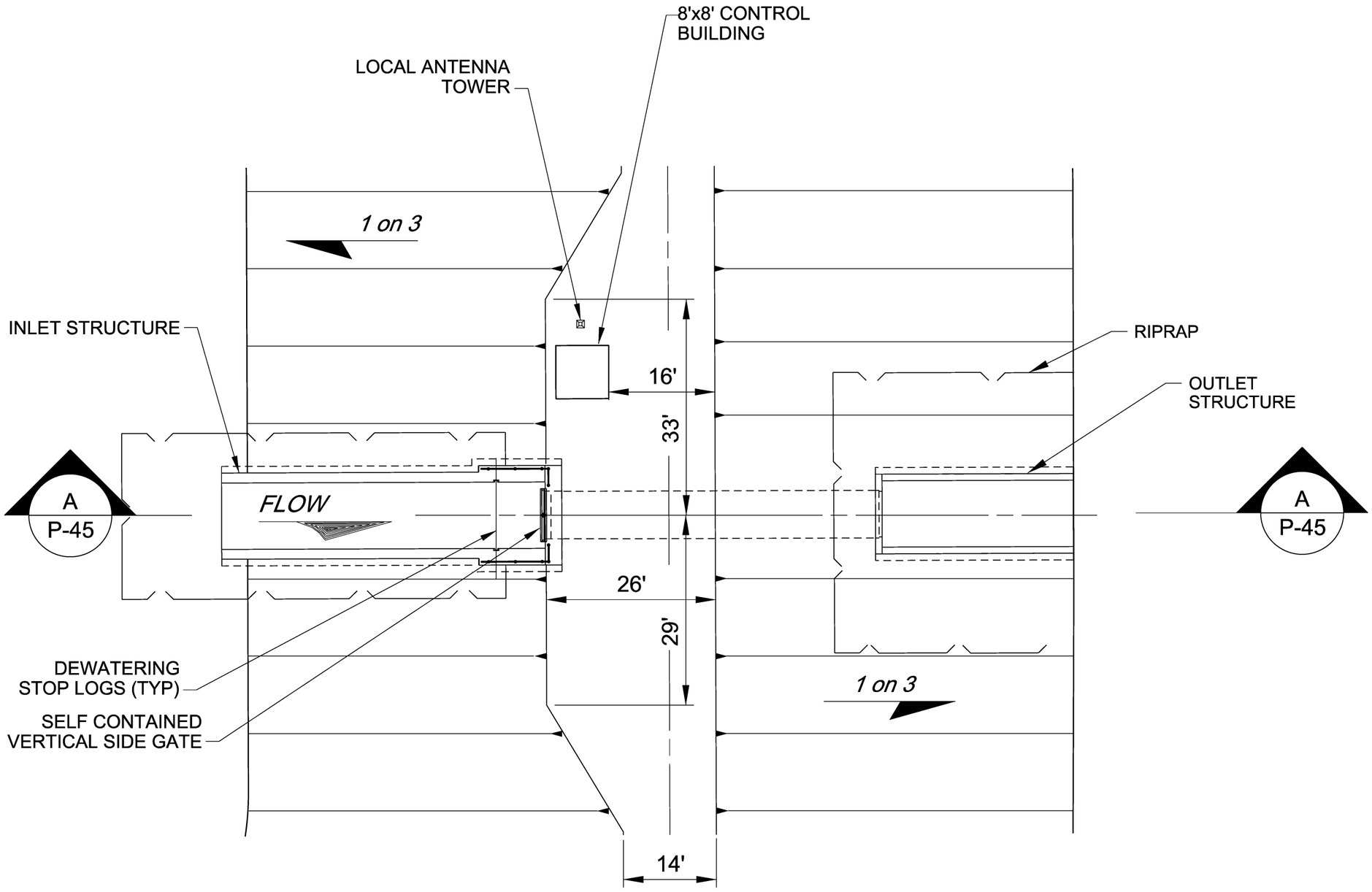

PLAN

0 20' 40'

US Army Corps of Engineers

U.S. ARMY CORPS OF ENGINEERS
JACKSONVILLE DISTRICT
JACKSONVILLE, FLORIDA

CENTRAL AND SOUTHERN FLORIDA PROJECTS
COMPREHENSIVE EVERGLADES RESTORATION PROJECT
LOXAHATCHEE RIVER WATERSHED RESTORATION
NINE GEMS SOUTHERN CANAL CULVERTS S-114A, S-114B AND S-116

PLATE NO.

P-44

NOTE:
CULVERT SEEPAGE CONTROL MEASURES NOT SHOWN FOR CLARITY. FOR DETAILS SEE WRTIEUP IN ENGINEERING APPENDIX.

STRUCTURE DATA				
STRUCTURE	SIZE	L (FT)	ELEVATION	
			C1	V1
S-114A	72" DIA	30.0	21.3	13.5
S-114B	72" DIA	30.0	21.3	13.5
S-116	5'x7'	60.0	20.5	6.3

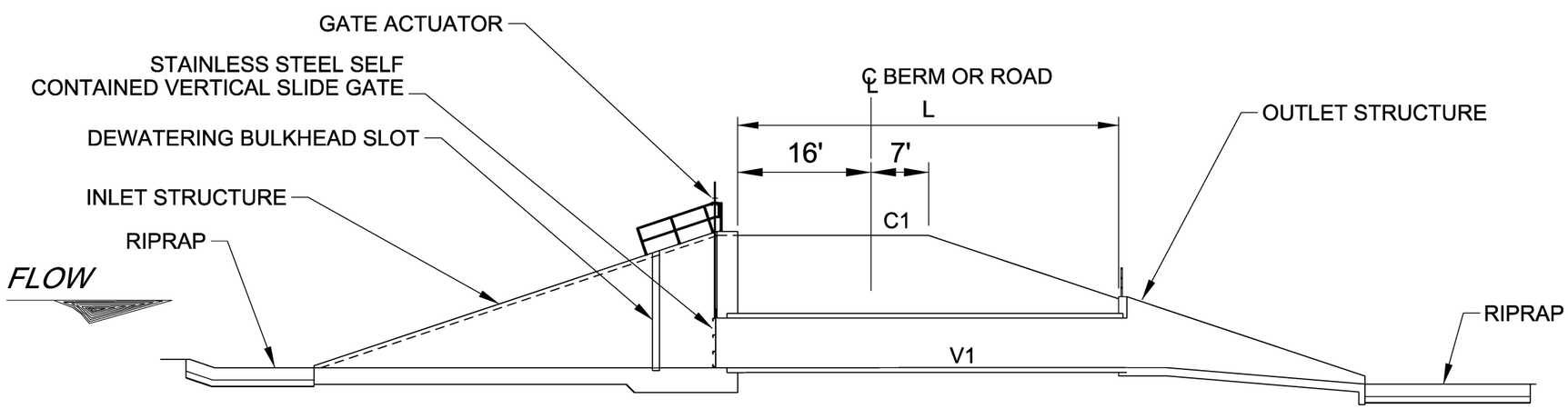

A
P-44

PROFILE SECTION

0 20' 40'

US Army Corps of Engineers

U.S. ARMY CORPS OF ENGINEERS
JACKSONVILLE DISTRICT
JACKSONVILLE, FLORIDA

CENTRAL AND SOUTHERN FLORIDA PROJECTS
COMPREHENSIVE EVERGLADES RESTORATION PROJECT
LOXAHATCHEE RIVER WATERSHED RESTORATION
NINE GEMS SOUTHERN CANAL
CULVERTS S-114A, S-114B AND S-116

PLATE NO.
P-45

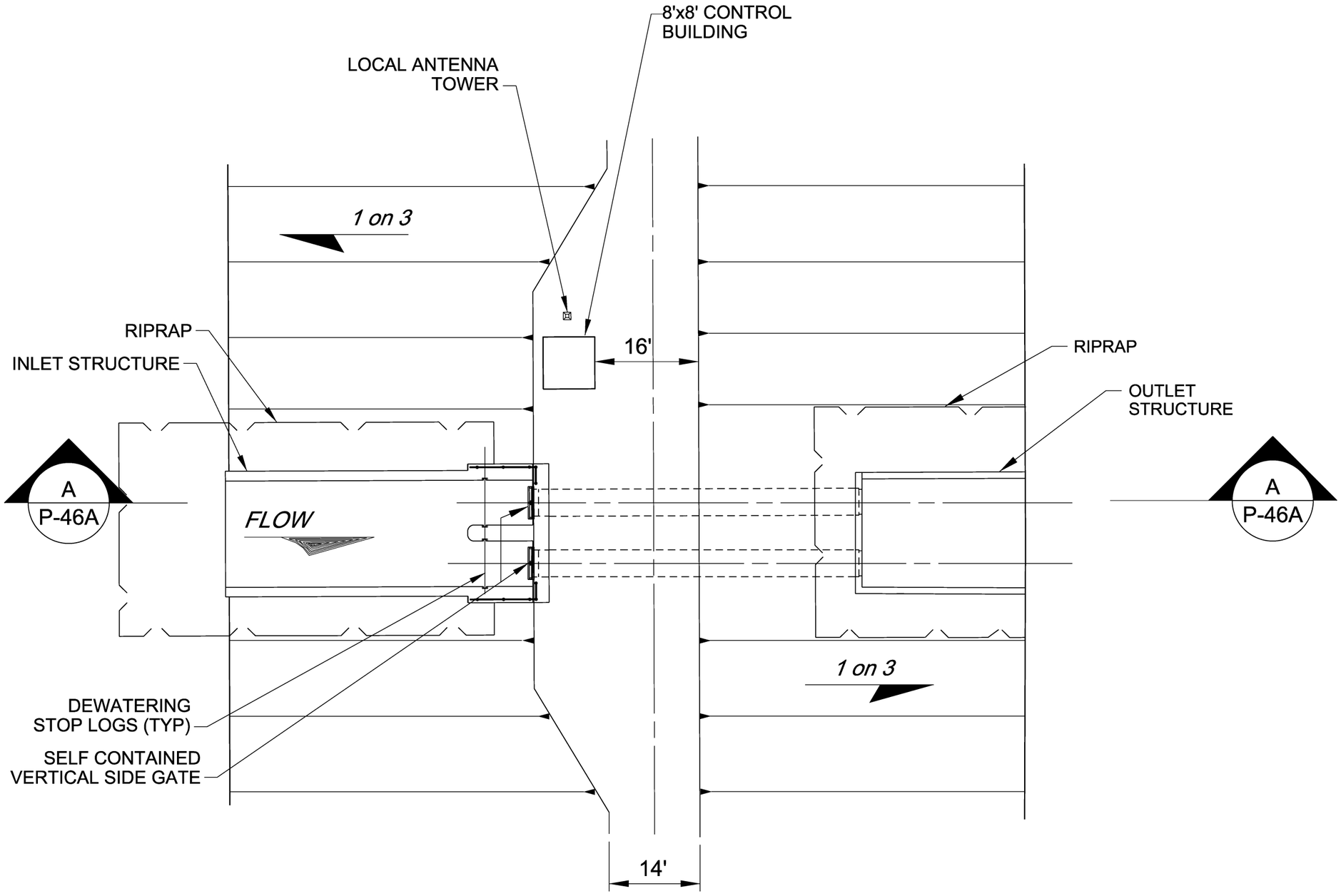

PLAN

0 20' 40'

US Army Corps of Engineers

U.S. ARMY CORPS OF ENGINEERS
JACKSONVILLE DISTRICT
JACKSONVILLE, FLORIDA

CENTRAL AND SOUTHERN FLORIDA PROJECTS
COMPREHENSIVE EVERGLADES RESTORATION PROJECT
LOXAHATCHEE RIVER WATERSHED RESTORATION
NINE GEMS SOUTHERN CANAL CULVERT S-114C

PLATE NO.

P-46

NOTE:
CULVERT SEEPAGE CONTROL MEASURES NOT SHOWN FOR CLARITY. FOR DETAILS SEE WRTIEUP IN ENGINEERING APPENDIX.

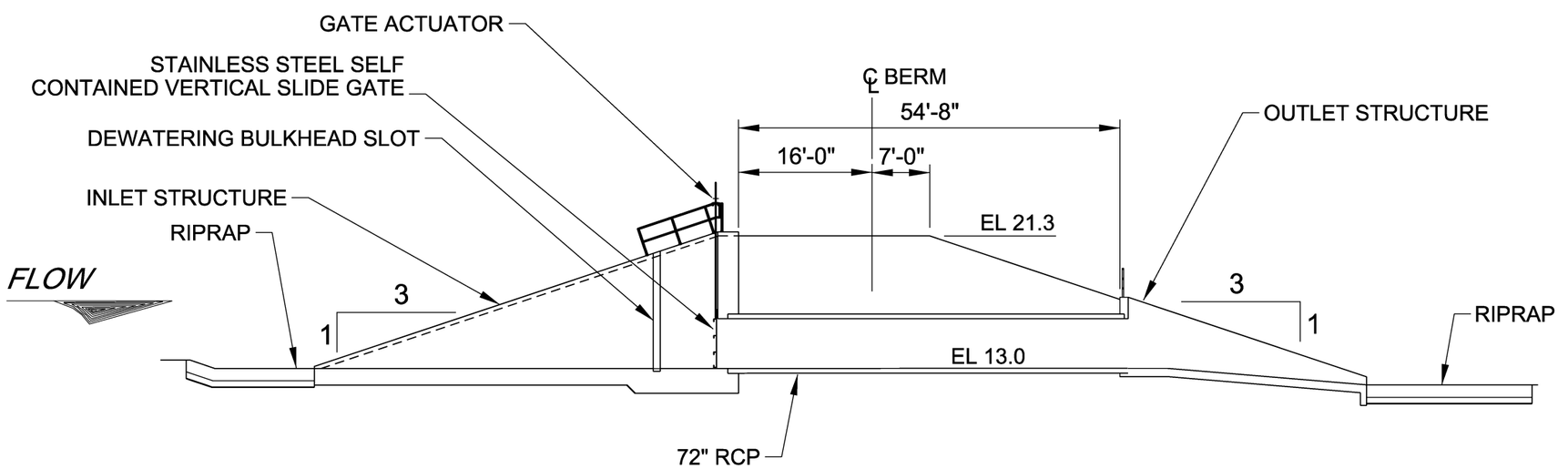

A
P-46

PROFILE SECTION

0 20' 40'

US Army Corps of Engineers

U.S. ARMY CORPS OF ENGINEERS
JACKSONVILLE DISTRICT
JACKSONVILLE, FLORIDA

CENTRAL AND SOUTHERN FLORIDA PROJECTS
COMPREHENSIVE EVERGLADES RESTORATION PROJECT
LOXAHATCHEE RIVER WATERSHED RESTORATION
NINE GEMS SOUTHERN CANAL CULVERT S-114C

PLATE NO.
P-46A

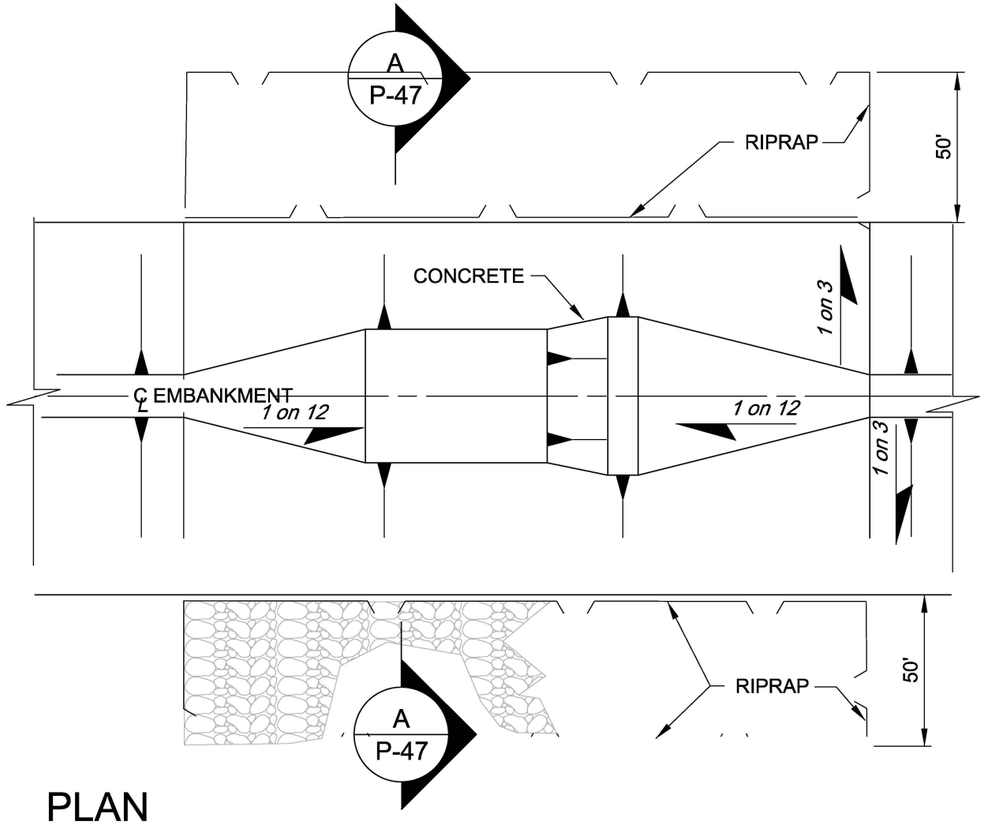

PLAN

0 50' 100'

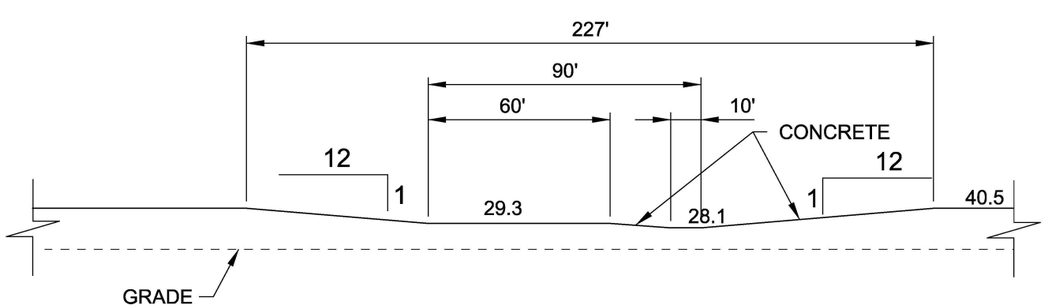

CENTERLINE PROFILE

0 50' 100'

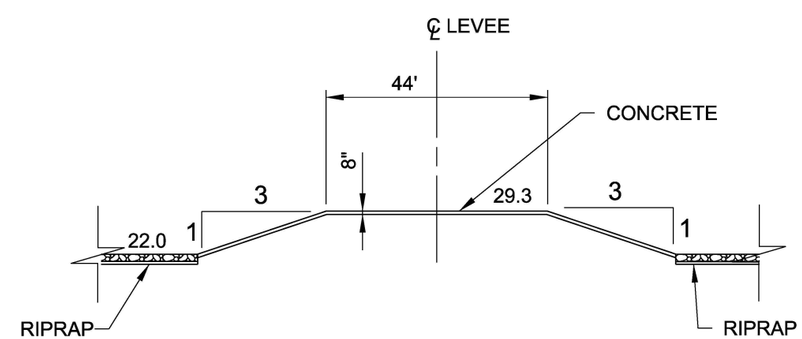

A
P-47

CROSS SECTION

0 30' 60'

US Army Corps of Engineers

U.S. ARMY CORPS OF ENGINEERS
JACKSONVILLE DISTRICT
JACKSONVILLE, FLORIDA

CENTRAL AND SOUTHERN FLORIDA PROJECTS
COMPREHENSIVE EVERGLADES RESTORATION PROJECT
LOXAHATCHEE RIVER WATERSHED RESTORATION
C-18W RESERVOIR EMERGENCY SPILLWAY S-101B

PLATE NO.

P-47

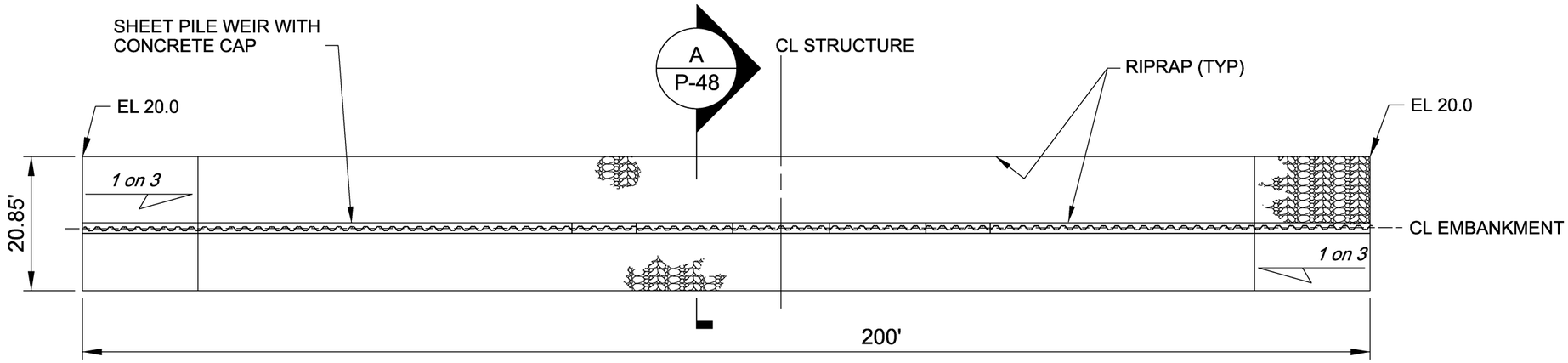

PLAN

0 20' 40'

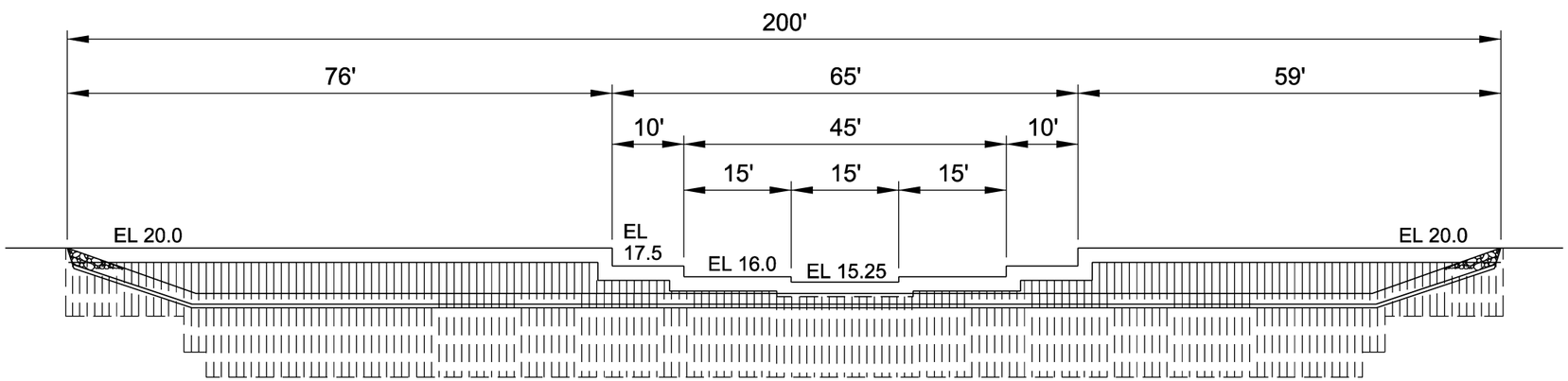

DOWNSTREAM ELEVATION

0 20' 40'

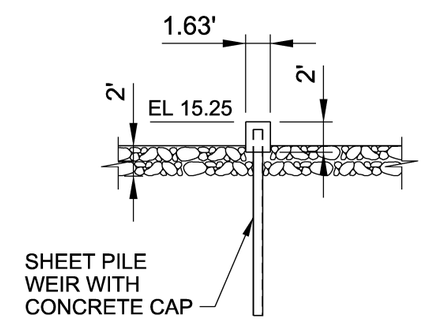

A
P-48

SECTION

0 10' 20'

US Army Corps of Engineers

U.S. ARMY CORPS OF ENGINEERS
JACKSONVILLE DISTRICT
JACKSONVILLE, FLORIDA

CENTRAL AND SOUTHERN FLORIDA PROJECTS
COMPREHENSIVE EVERGLADES RESTORATION PROJECT
LOXAHATCHEE RIVER WATERSHED RESTORATION
GULF STREAM WEST DISCHARGE WEIR S-111S

PLATE NO.

P-48

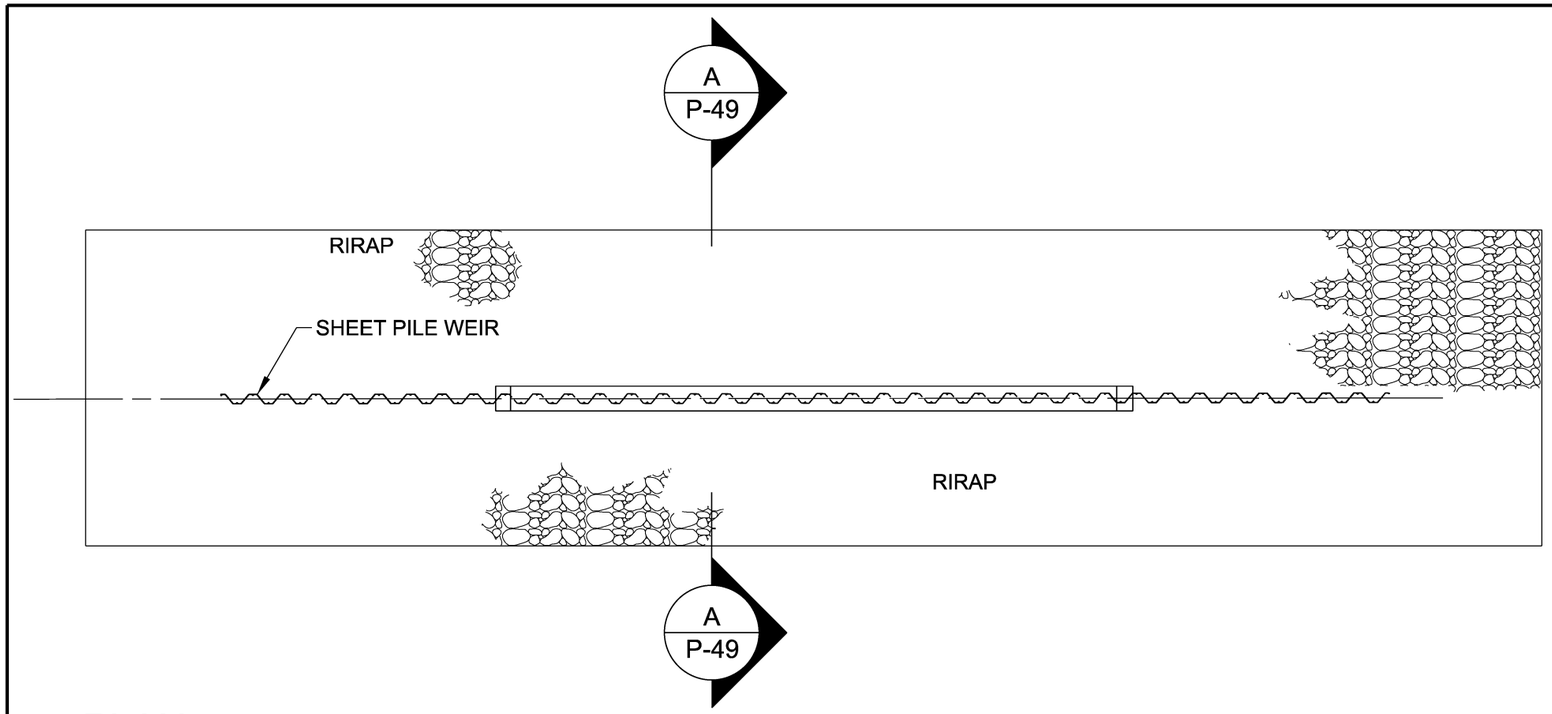

PLAN

0 10' 20'

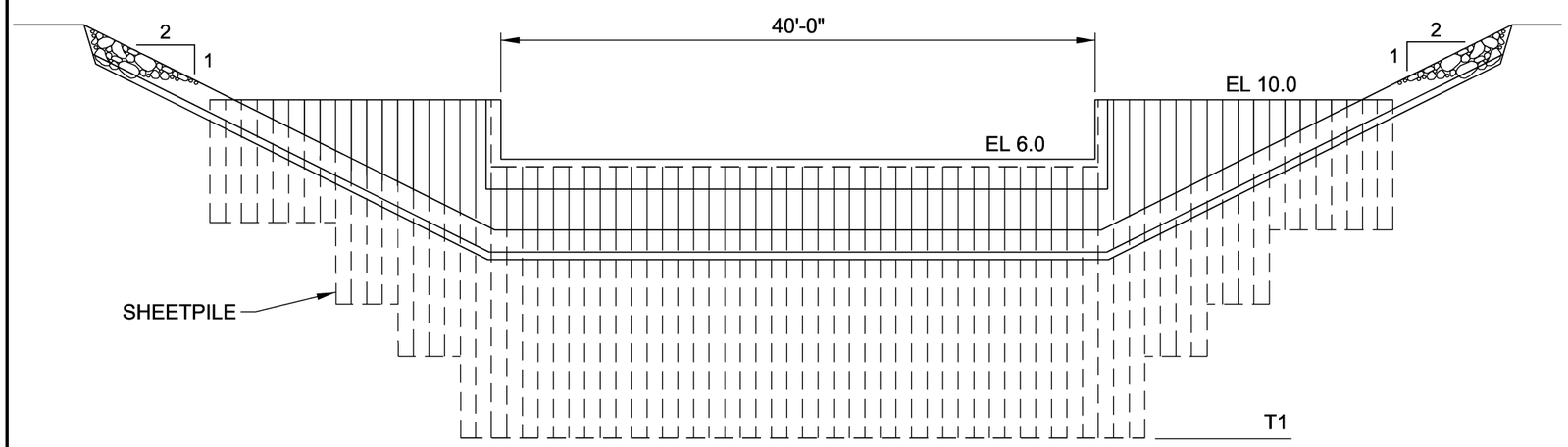

ELEVATION

0 10' 20'

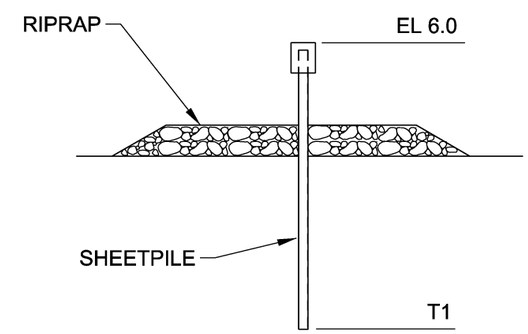

A
P-49

SECTION

US Army Corps of Engineers

U.S. ARMY CORPS OF ENGINEERS
JACKSONVILLE DISTRICT
JACKSONVILLE, FLORIDA

CENTRAL AND SOUTHERN FLORIDA PROJECTS
COMPREHENSIVE EVERGLADES RESTORATION PROJECT

LOXAHATCHEE RIVER
WATERSHED RESTORATION
HOBE GROVE DITCH
WEIR S-117

PLATE NO.

P-49

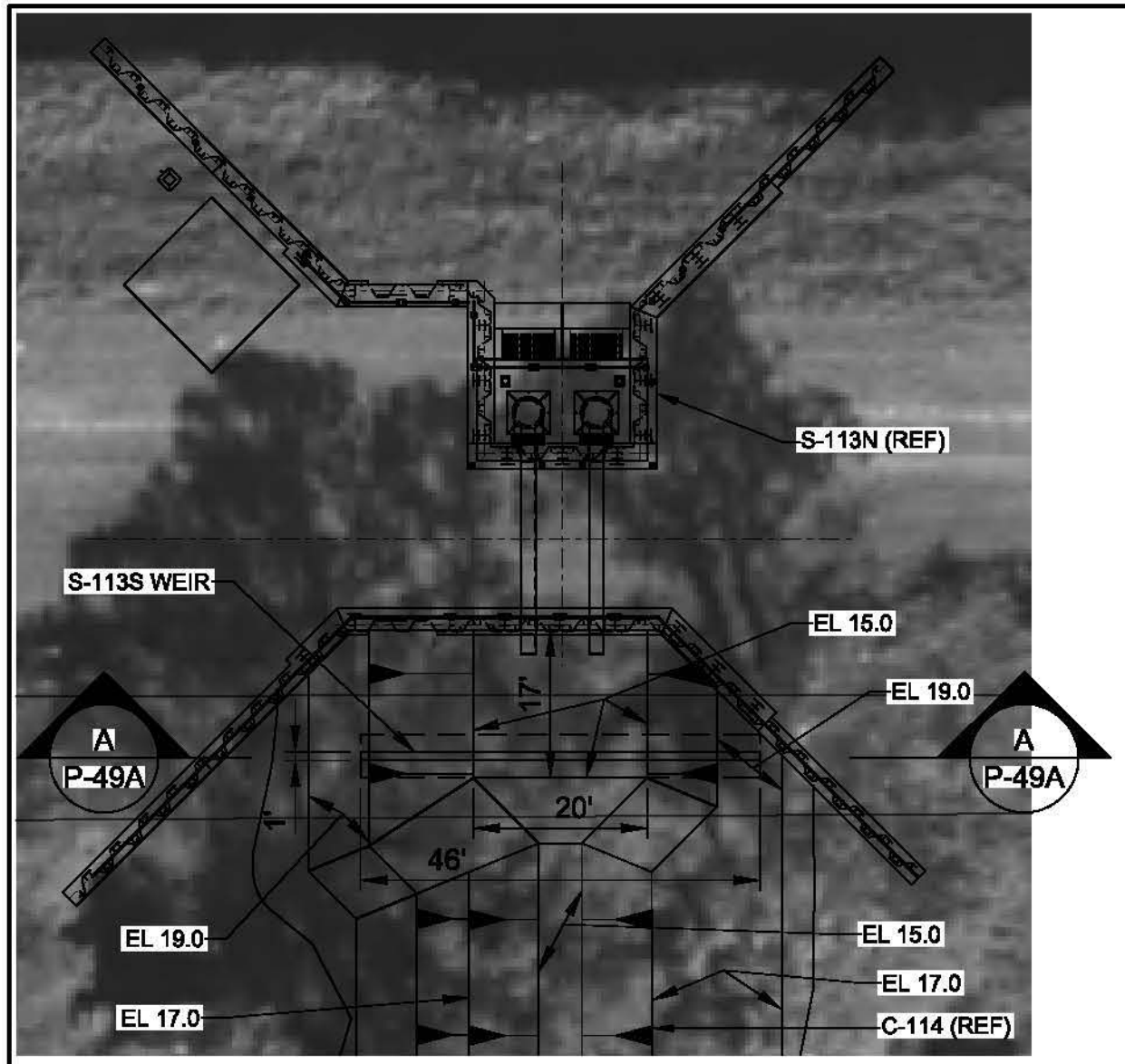

N

PLAN

0 20' 40'

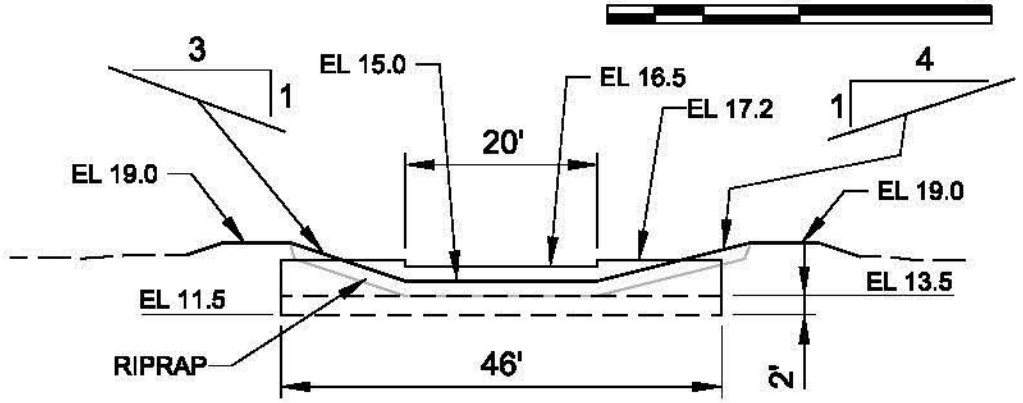

A
P-49A

SECTION

0 20' 40'

US Army Corps of Engineers

U.S. ARMY CORPS OF ENGINEERS
JACKSONVILLE DISTRICT
JACKSONVILLE, FLORIDA

CENTRAL AND SOUTHERN FLORIDA PROJECTS
COMPREHENSIVE EVERGLADES RESTORATION PROJECT
LOXAHATCHEE RIVER WATERSHED RESTORATION

S-113S WEIR

PLATE NO.

P-49A

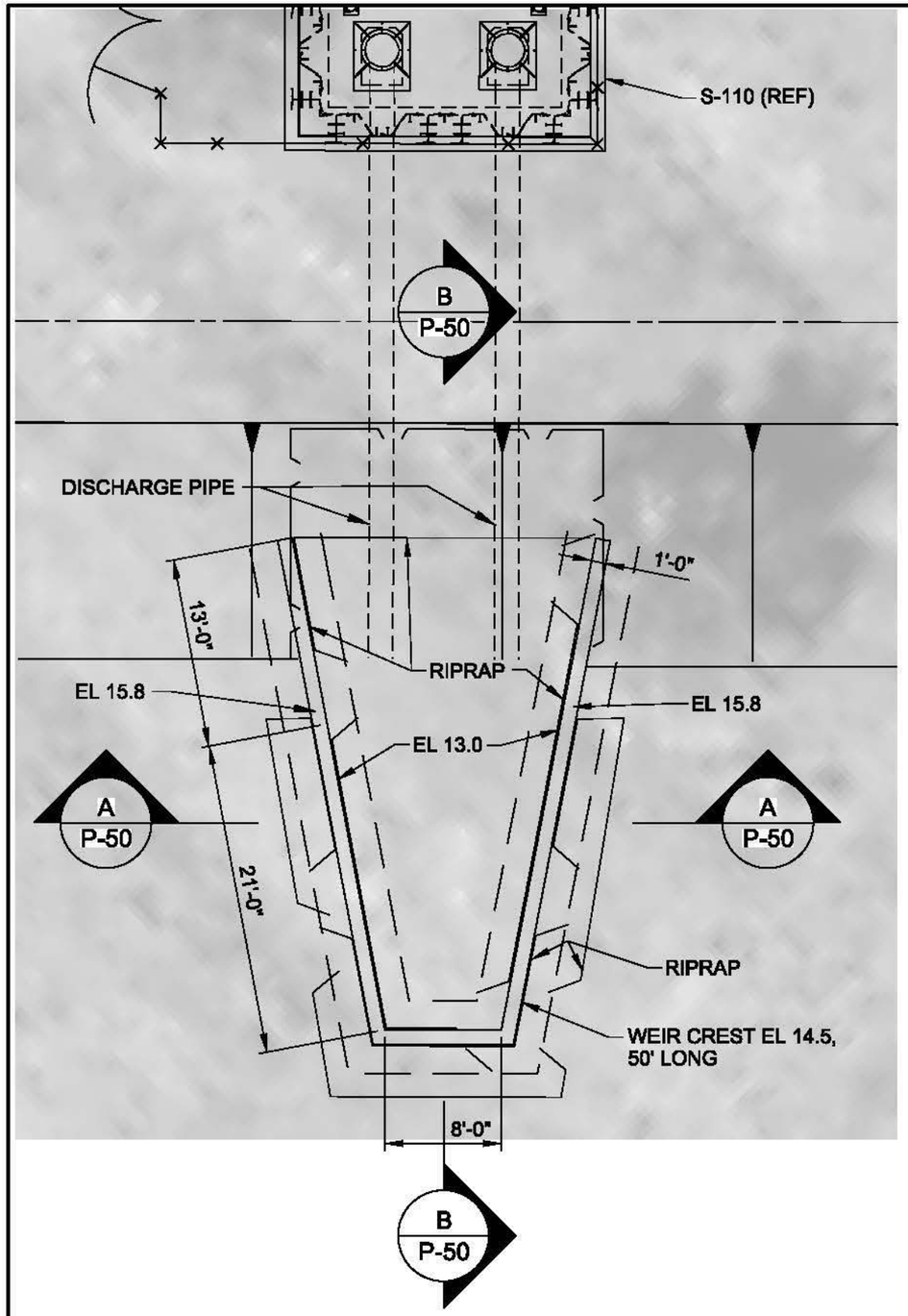

PLAN

0 10' 20'

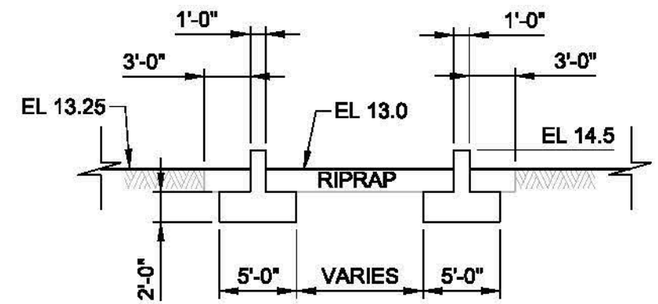

A P-50 **SECTION**

0 10' 20'

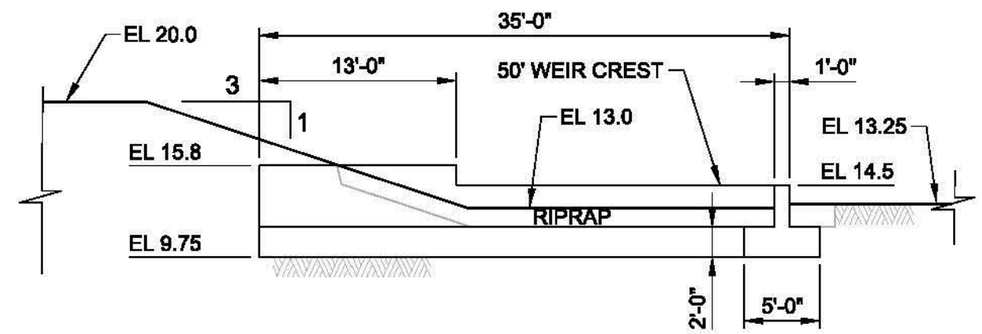

B P-50 **SECTION**

0 10' 20'

US Army Corps of Engineers

U.S. ARMY CORPS OF ENGINEERS
JACKSONVILLE DISTRICT
JACKSONVILLE, FLORIDA

CENTRAL AND SOUTHERN FLORIDA PROJECTS
COMPREHENSIVE EVERGLADES RESTORATION PROJECT
LOXAHATCHEE RIVER WATERSHED RESTORATION
GULFSTREAM WEST WEIR S-111N

PLATE NO.

P-50

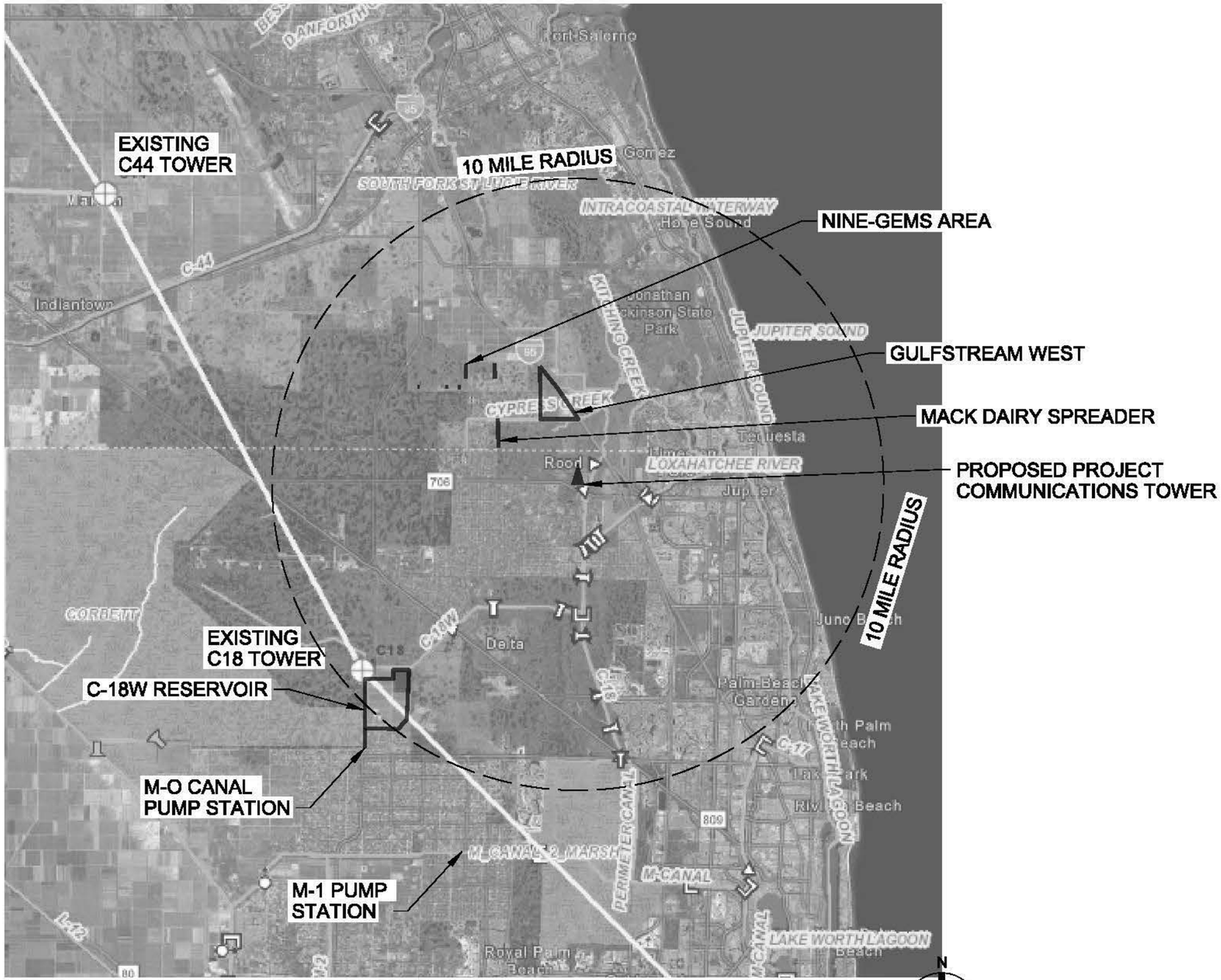

SCADA MICROWAVE BACKBONE PLAN

0 20000' 40000'

US Army Corps of Engineers

U.S. ARMY CORPS OF ENGINEERS
JACKSONVILLE DISTRICT
JACKSONVILLE, FLORIDA

CENTRAL AND SOUTHERN FLORIDA PROJECTS
COMPREHENSIVE EVERGLADES RESTORATION PROJECT
LOXAHATCHEE RIVER WATERSHED RESTORATION
PROJECT SCADA BACKBONE DIAGRAM

PLATE NO.
P-51

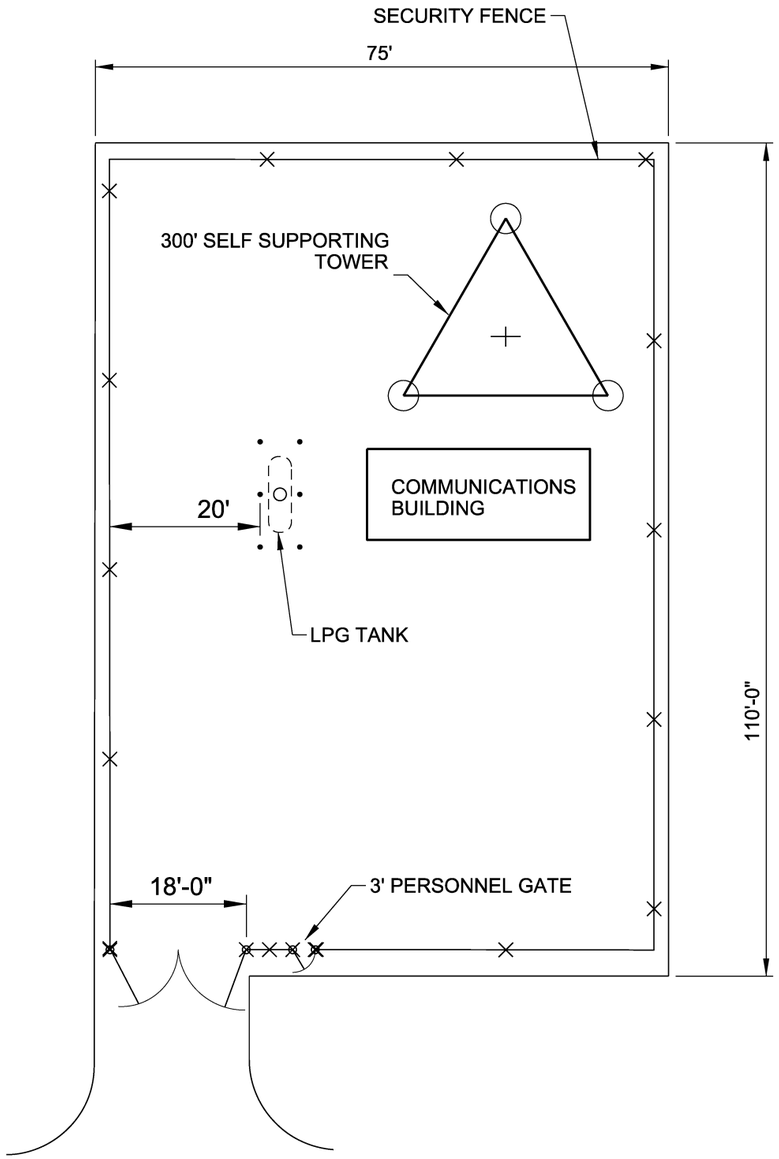

SITE PLAN

0 20' 40'

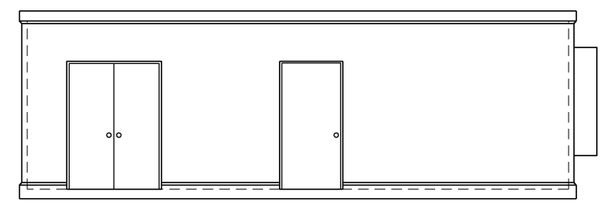

BUILDING FRONT ELEVATION

0 4' 8' 16'

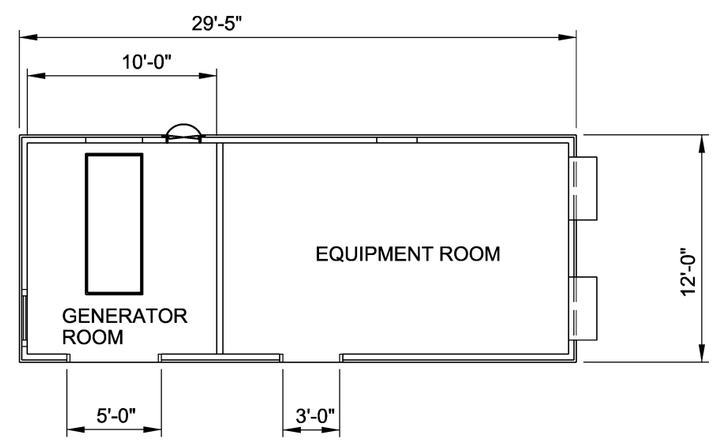

BUILDING FLOOR PLAN

0 4' 8' 16'

US Army Corps of Engineers

U.S. ARMY CORPS OF ENGINEERS
JACKSONVILLE DISTRICT
JACKSONVILLE, FLORIDA

CENTRAL AND SOUTHERN FLORIDA PROJECTS
COMPREHENSIVE EVERGLADES RESTORATION PROJECT
LOXAHATCHEE RIVER WATERSHED RESTORATION
PROJECT COMMUNICATIONS FACILITY

PLATE NO.
P-52

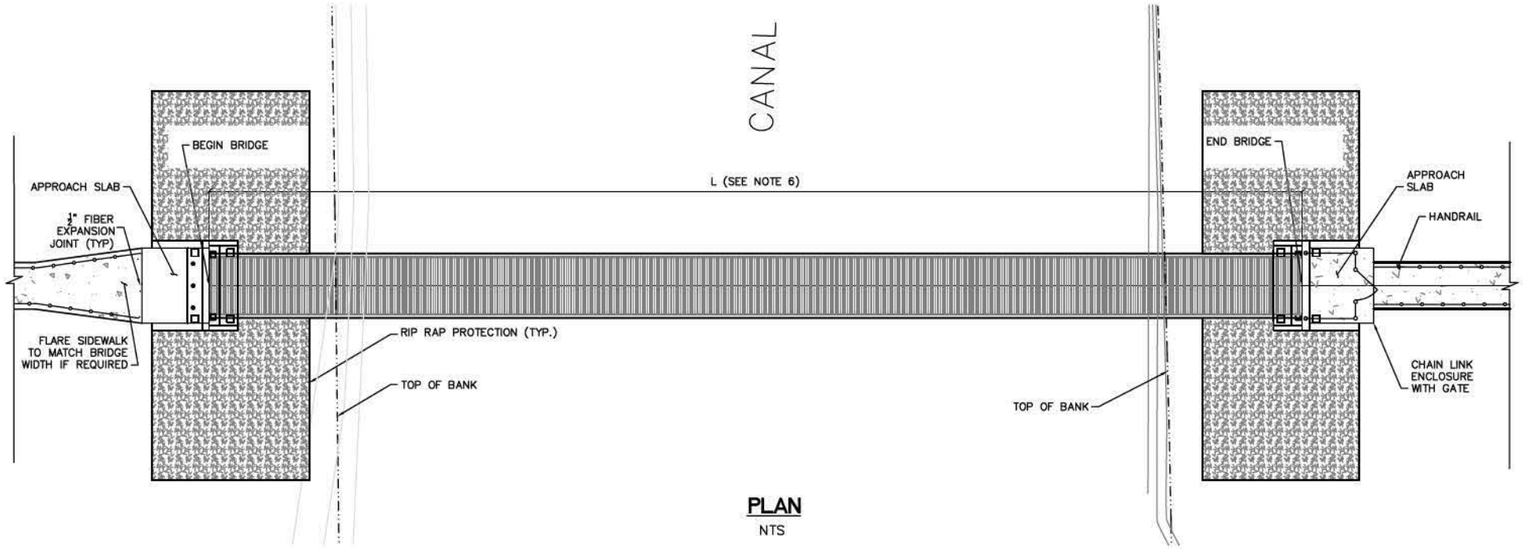

PLAN

NTS

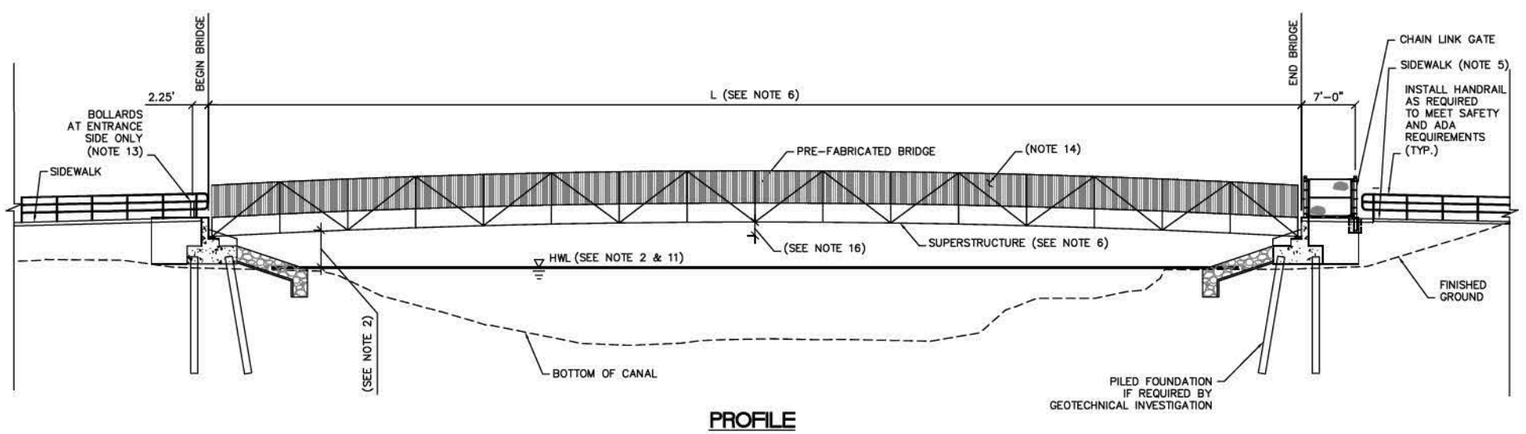

PROFILE

NTS

GENERAL NOTES:

1. BRIDGE SHALL BE DESIGNED IN ACCORDANCE WITH THE AASHTO, GUIDE SPECIFICATION FOR DESIGN OF PEDESTRIAN BRIDGES.
2. THE MINIMUM VERTICAL CLEARANCE BETWEEN THE BRIDGE LOW MEMBER AND THE HIGH WATER LEVEL (HWL) SHALL BE 5 FEET FOR NON-MOTORIZED BOATS AND 8 FEET WHERE MOTORIZED BOATS ARE ALLOWED. BOAT USE OF THE CANAL SHALL BE PROVIDED BY SFWMD.
3. DESIGN LOADS
   LIVE LOAD = 100 PSF
   1000 LB POINT LOAD
4. STRUCTURES SHALL BE DESIGNED FOR A 3 SECOND WIND GUST VELOCITY OF 145 MPH, EXP. B, I=1.0, IN ACCORDANCE WITH THE SOUTH FLORIDA WATER MANAGEMENT DISTRICT.
5. BRIDGE APPROACH SLOPES SHALL MEET ADA REQUIREMENTS.
6. A TIMBER SUPERSTRUCTURE IS PREFERRED BY THE SFWMD FOR THE PEDESTRIAN BRIDGE BUT LARGE SPAN LENGTHS MAY BE DESIGNED WITH A STEEL OR CONCRETE SUPERSTRUCTURE.
7. TIMBER DECKING SHALL BE USED FOR THE PEDESTRIAN BRIDGE.
8. PEDESTRIAN BRIDGES SHALL BE DESIGNED TO ACCOMMODATE EQUESTRIAN TRAFFIC.
9. ABUTMENTS SHALL BE REINFORCED CONCRETE.
10. SUBSTRUCTURE SHALL BE DESIGNED WITH INFORMATION PROVIDED BY GEOTECHNICAL BORINGS TAKEN AT THE SITE.
11. HIGH WATER LEVEL SHALL BE PROVIDED BY THE SFWMD.
12. PRE-FABRICATED BRIDGE BY STEADFAST BRIDGES OR EQUIVALENT.
13. BOLLARDS SHALL BE PLACED ON ENTRANCE SIDE OF PEDESTRIAN BRIDGES TO PREVENT USE BY ALL TERRAIN VEHICLES.
14. BRIDGE RAILINGS SHALL BE VERTICAL.
15. WINGWALLS SHALL BE DESIGNED TO PREVENT SOIL WASHOUT AROUND FOOTINGS.
16. BRIDGE SHALL BE DESIGNED WITH ARCHITECTURAL CAMBER WITHIN ADA LIMITATIONS AND AS DIRECTED BY THE DISTRICT.
17. PROVIDE LIGHTNING PROTECTION SYSTEM FOR THE STEEL SUPERSTRUCTURE. PLANS FOR THE LIGHTNING PROTECTION SYSTEM SHALL BE SUBMITTED TO THE ENGINEER FOR REVIEW.

US Army Corps of Engineers

U.S. ARMY CORPS OF ENGINEERS
JACKSONVILLE DISTRICT
JACKSONVILLE, FLORIDA

CENTRAL AND SOUTHERN FLORIDA PROJECTS
COMPREHENSIVE EVERGLADES RESTORATION PROJECT
LOXAHATCHEE RIVER WATERSHED RESTORATION
PEDESTRIAN TRAIL BRIDGE

PLATE NO.

P-53

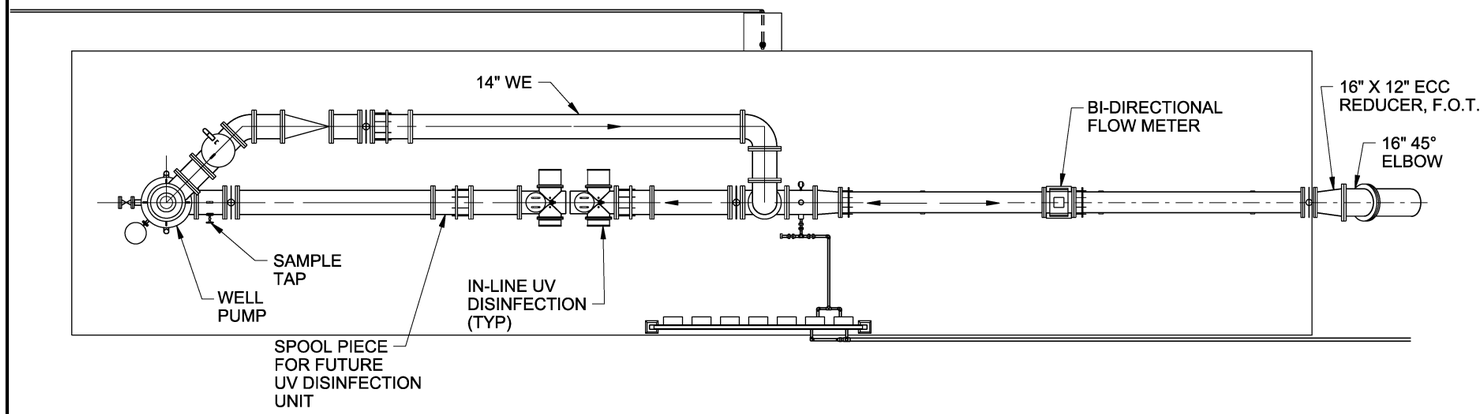

PLAN

0 4' 8' 16'

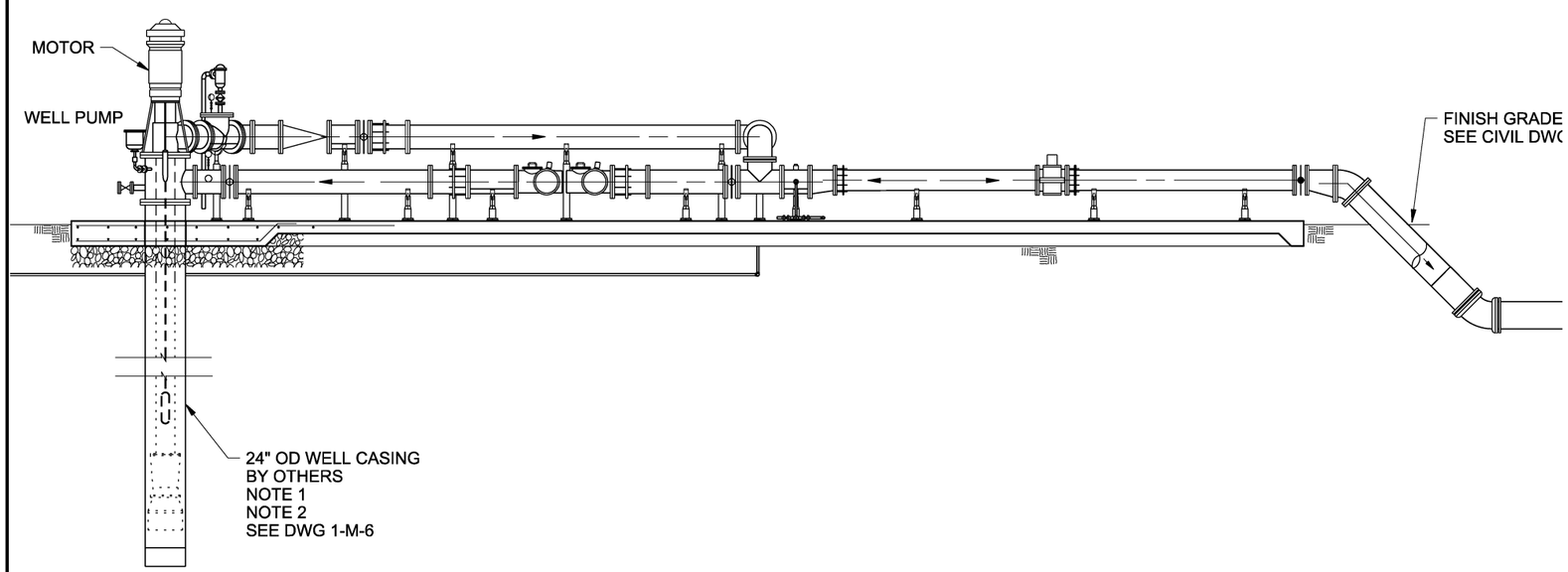

SECTION

0 4' 8' 16'

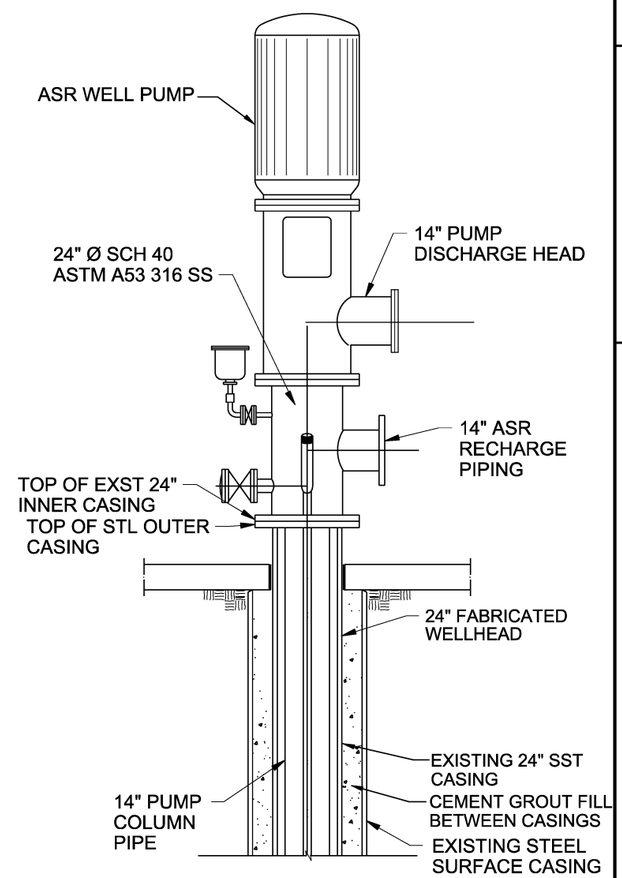

PUMP DETAIL

0 4' 8' 16'

US Army Corps
of Engineers

U.S. ARMY CORPS OF ENGINEERS
JACKSONVILLE DISTRICT
JACKSONVILLE, FLORIDA

CENTRAL AND SOUTHERN FLORIDA PROJECTS
COMPREHENSIVE EVERGLADES RESTORATION PROJECT
LOXAHATCHEE RIVER
WATERSHED RESTORATION
C-18W RESERVOIR
TYPICAL ASR WELL

PLATE NO.

P-54

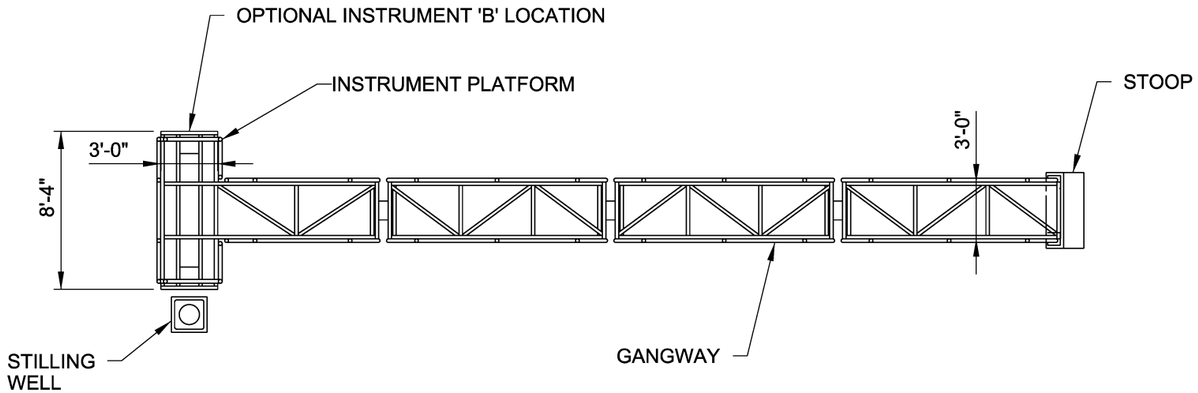

PILE TIP ELEVATIONS		
PILING	LENGTH	EL (NAVD88)
A		
B		
C		
D		

PLAN VIEW

0 4' 8' 16'

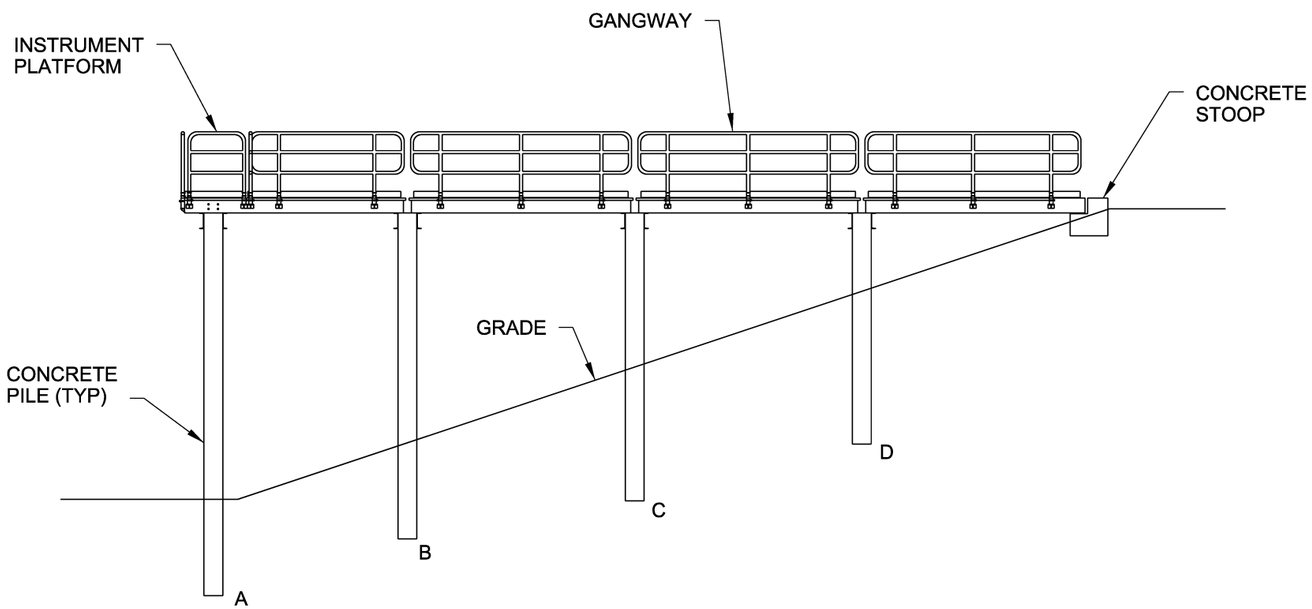

SIDE ELEVATION

0 4' 8' 16'

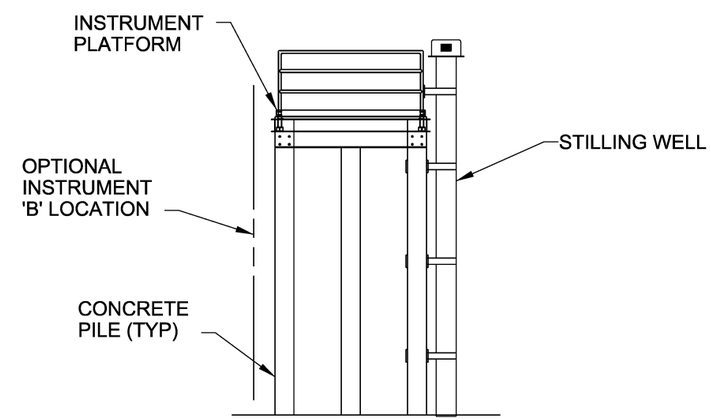

FRONT ELEVATION

0 4' 8' 16'

US Army Corps of Engineers

U.S. ARMY CORPS OF ENGINEERS
JACKSONVILLE DISTRICT
JACKSONVILLE, FLORIDA

CENTRAL AND SOUTHERN FLORIDA PROJECTS
COMPREHENSIVE EVERGLADES RESTORATION PROJECT
LOXAHATCHEE RIVER WATERSHED RESTORATION

TYPICAL STILLING WELL

PLATE NO.

P-55

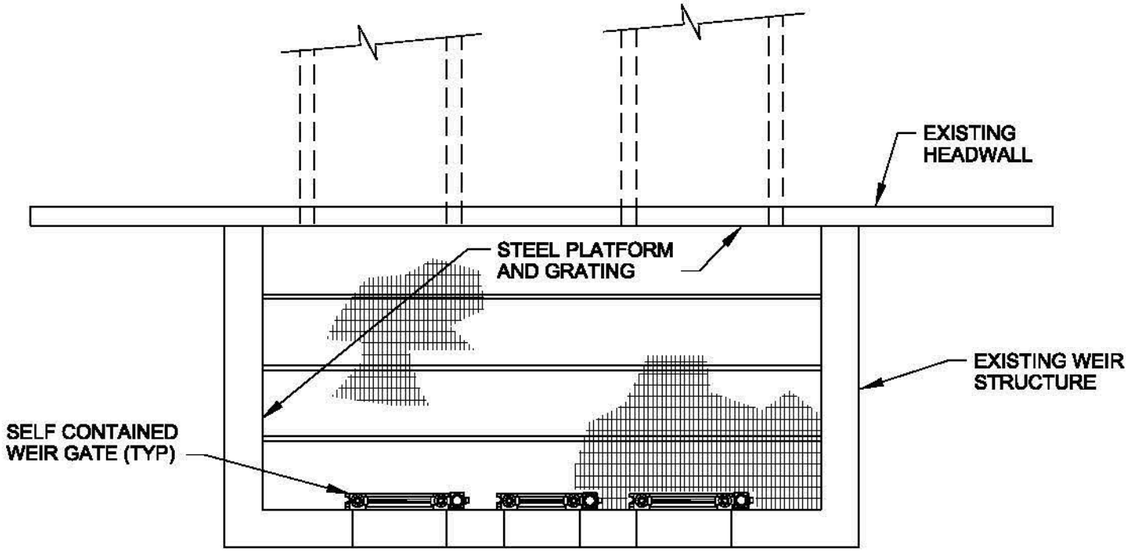

PLAN, EL 21.6

0 4' 8' 16'

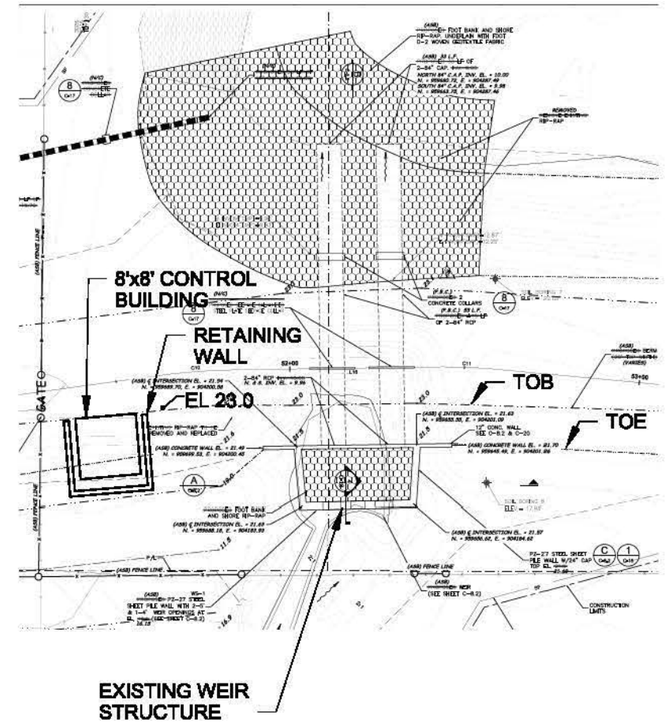

SITE PLAN

0 20' 40'

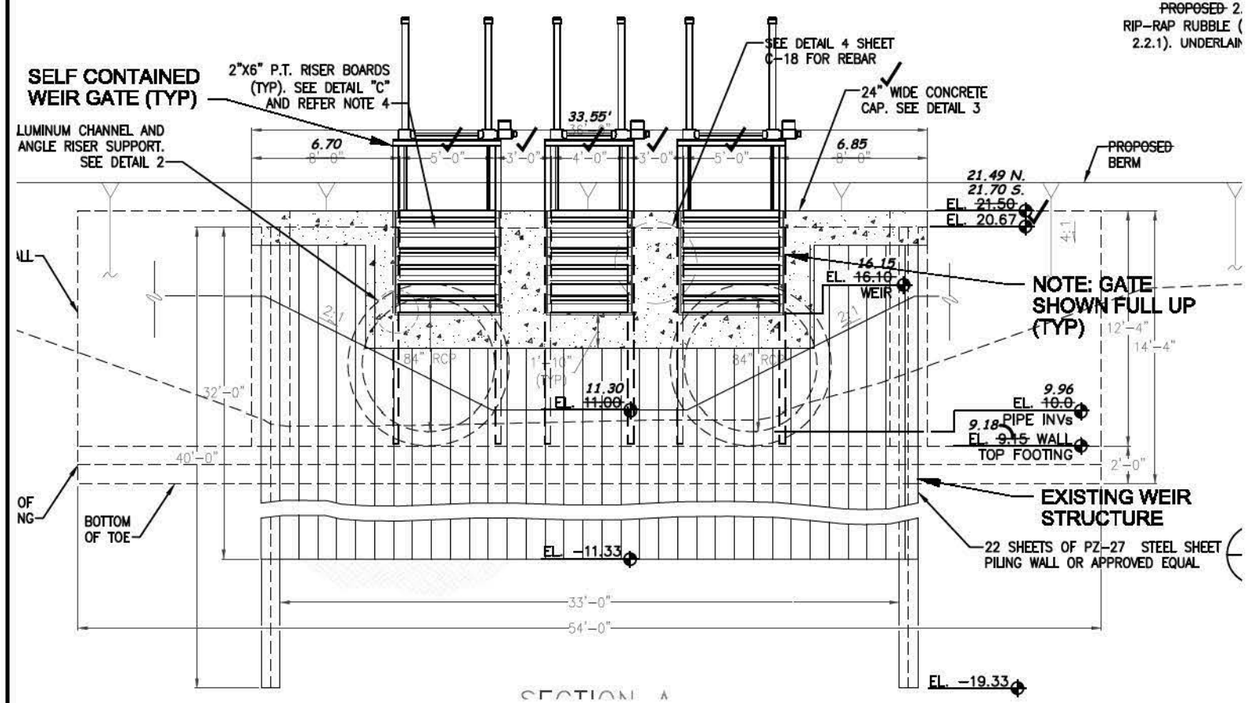

UPSTREAM ELEVATION

0 4' 8' 16'

US Army Corps of Engineers

U.S. ARMY CORPS OF ENGINEERS
JACKSONVILLE DISTRICT
JACKSONVILLE, FLORIDA

CENTRAL AND SOUTHERN FLORIDA PROJECTS
COMPREHENSIVE EVERGLADES RESTORATION PROJECT
LOXAHATCHEE RIVER WATERSHED RESTORATION
CULPEPPER CONTROL STRUCTURES
S-115A UPGRADE STRUCTURE WS-1

PLATE NO.

P-56

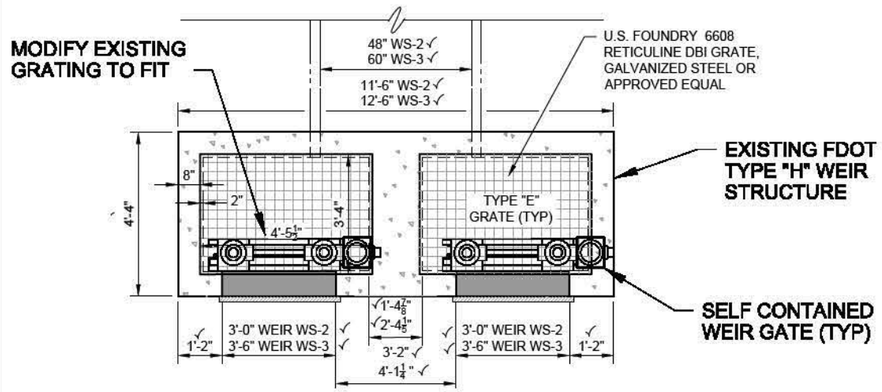

TYPICAL PLAN

0 2' 4' 8'

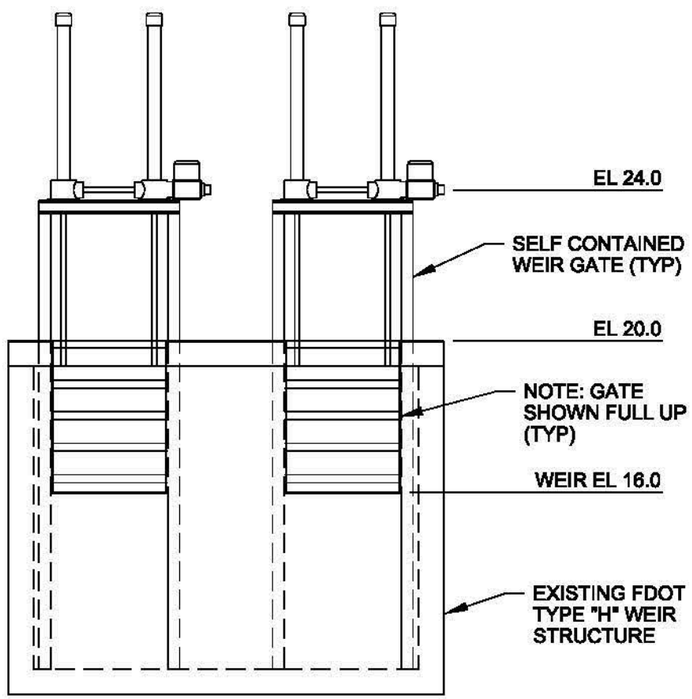

TYPICAL UPSTREAM ELEVATION

0 2' 4' 8'

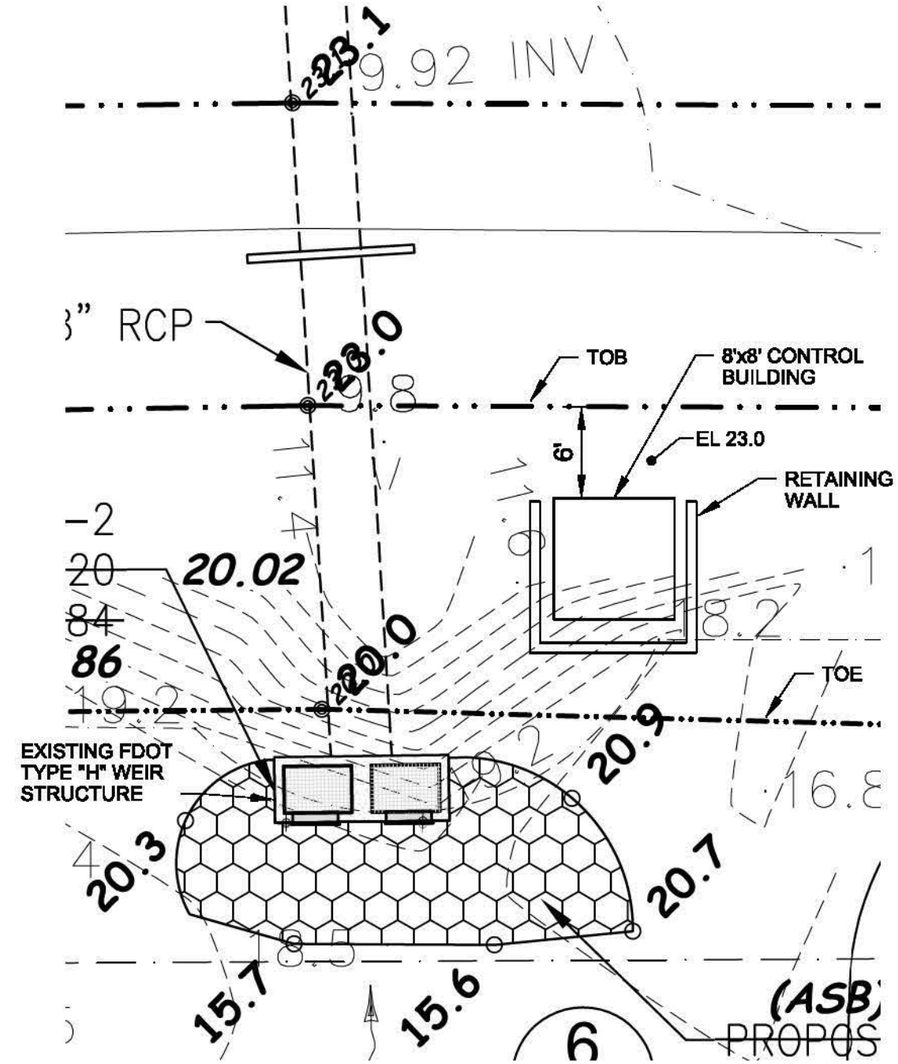

TYPICAL SITE PLAN

0 10' 20'

US Army Corps of Engineers

U.S. ARMY CORPS OF ENGINEERS
JACKSONVILLE DISTRICT
JACKSONVILLE, FLORIDA

CENTRAL AND SOUTHERN FLORIDA PROJECTS
COMPREHENSIVE EVERGLADES RESTORATION PROJECT
LOXAHATCHEE RIVER WATERSHED RESTORATION
CULPEPPER CONTROL STRUCTURES S-115B AND S-115C UPGRADE STRUCTURES

PLATE NO.
P-57