MIAMI-DADE BACK BAY
COASTAL STORM RISK MANAGEMENT

STATUS: DRAFT MAY 2020

STRUCTURAL SUB-APPENDIX

US Army Corps
of Engineers ®
Norfolk District

Table of Contents

CHAPTER 1 INTRODUCTION 3
CHAPTER 2 T-WALL ANALYSIS 4
CHAPTER 3 GATE ANALYSIS 42
3.1 SURGE BARRIER GATES 42
3.1.1 MITER GATES 42
3.1.2 SECTOR GATES 42
3.2 STREET CLOSURES 42
3.3 FLOODWALL IN WATER 42
CHAPTER 4 APPENDIX DRAWINGS 53
CHAPTER 5 REFERENCES 65

CHAPTER 1 INTRODUCTION

The examined water levels and existing geology called for the use of T-walls for design and construction. The geotechnical, hydraulic/hydrologic, and structural engineering disciplines of the PDT collaborated on the preliminary design of these measures. Initially, any wall that had a required height less than 6 feet was determined to be an earthen embankment or an I-wall with a sheet pile base. However, the geotechnical engineer found that the geology of the area would not allow for a sheet pile based I-wall. Alternatives such as secant pile based walls were looked into. It was determined that construction costs would be comparable to using T-walls for all heights. Therefore, the PDT made the decision to use T-walls for all wall heights for the estimating purposes of this study. Preliminary analysis was not performed for the I-walls, however a drawing has been provided in this sub appendix for reference. I-walls were drawn with auger cast piles but will need further analysis for future refinement and incorporation.

The following preliminary calculations cover the design of T-walls. For this level of design, the PDT investigated the design of a land specific, 20 foot wall (above grade) as this wall size gave the maximum pile spacing, clearances and geometry based on the hydraulic analyses performed. This section can be applied to most floodwall alignments in this project. An exception would be the 28 foot wall (above grade) that was designed specifically for use along the portion of the Miami River alignment where much of the floodwall is underwater. The width and thickness of the base, pile spacing, and pile count may vary depending on the height of the wall.

CHAPTER 2 T-WALL ANALYSIS

The following is a 10% analysis to address the usage of T-Walls for flood mitigation in the Miami-Dade County comprehensive study.

The governing criteria is EM 1110-2-2502 "Retaining and Flood Walls". The load cases used to conduct the 10% design and analysis were taken from EM 1110-2-2502. They are as follows.

1. Case C1: Full Flood Loading (Static Water Level)

2. Case C2: Goda Wave Loading

3. Case C3: Seismic Loading

4. Case C4: Construction Loading

5. Case C5: Wind Loading

The T-Wall on piles was selected as to ensure continuous stability throughout a storm event. Use of shallow soil supported foundations in a coastal region was determined not to be in accordance with USACE criteria nor good engineering practice.

Soil properties used to determine soil coefficient, K_o, was based upon existing soil characteristics from archived soil borings taken throughout the county. The soil borings were a conglomeration of the soil borings from the Florida Department of Transportation (FDOT) throughout each of the focus areas (Miami River, Little River, and Biscayne Canal).

Uplift pressures were determined for all load cases in accordance with USACE criteria, and standard engineering practice. To mitigate the effects of hydrostatic uplift forces, a 10'-0" deep cement/bentonite cutoff wall is being considered as part of the T-wall construction. The uplift pressures for various base widths and cement/bentonite cutoff wall depths are provided in the geotechnical sub appendix.

Wave forces were developed using the Goda Method. These were considered to act in place of the hydrostatic forces ABOVE the finished grade line. Full hydrostatic lateral forces are considered to act below the finished grade. The Goda pressure distribution is included as part of this sub appendix.

This being a 10% design, the goal of this analysis is to ensure a stable structure that can be fully developed for design during the Planning, Engineering and Design portion of this project. It is acknowledged that minor changes to wall geometry and pile layout will be inevitable as the project progresses.

10% DESIGNS FOR T-WALLS

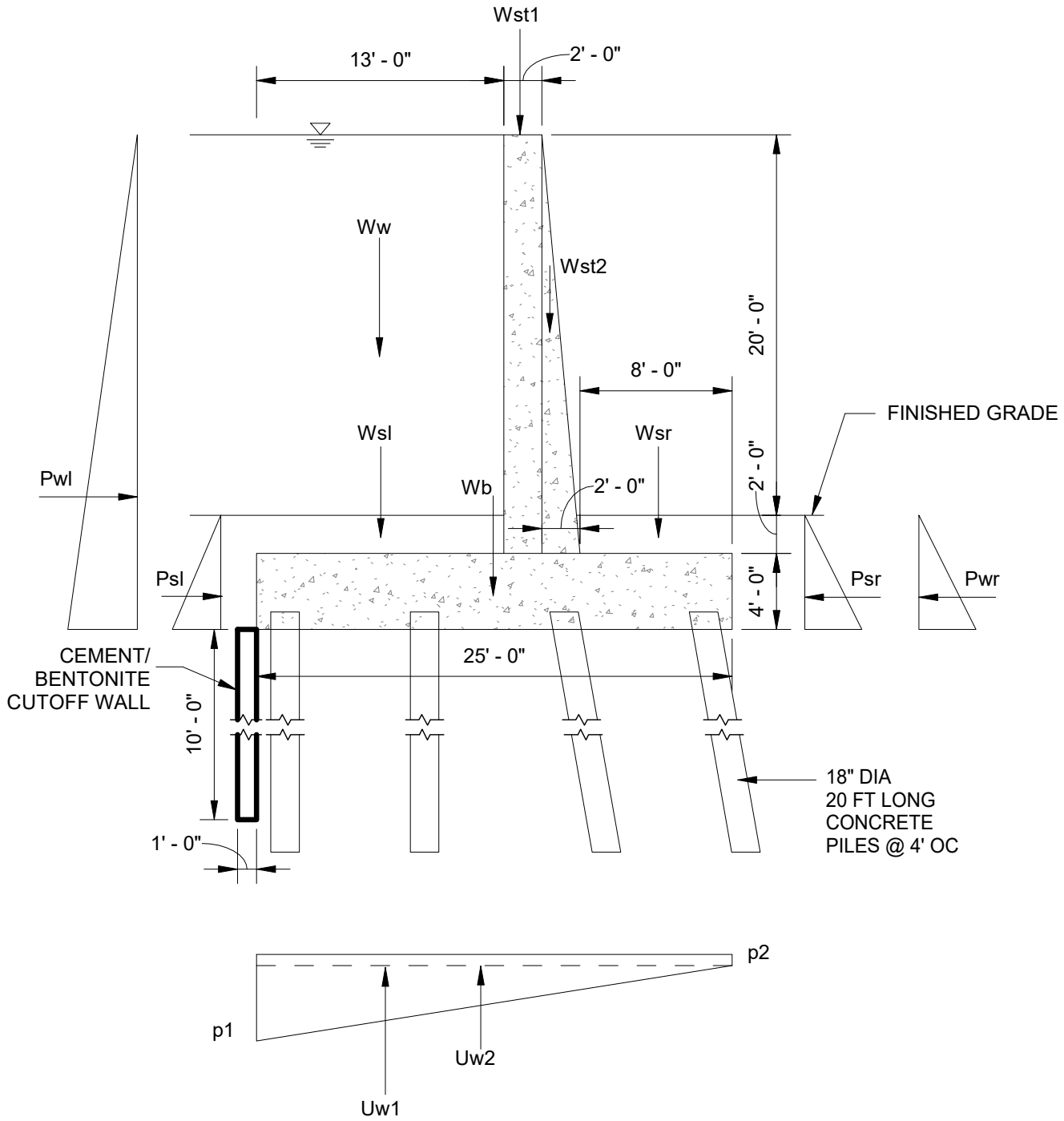

US ARMY CORPS OF ENGINEERS **MIAMI-DADE COUNTY STORM RISK MANAGEMENT STUDY**	DESIGNED BY: Designer	ISSUE DATE: JAN 2020	CONTRACT NO.:
	DRAWN BY: Author	SOLICITATION NO.:	FILE NUMBER:
LOAD CASE C1 HIGH WATER	CHECKED BY: Checker	**US Army Corps of Engineers ®**	
	SUBMITTED BY:		

CASE C1: HIGH WATER (PER EM 1110-2-2502)

SOIL PROPERTIES

γ_s =	120.00	PCF
Ø=	20.00	
c =	100.00	PSF
K_o =	0.5	

WATER PROPERTIES

γ_W =	64.00	PCF

CONCRETE PROPERTIES

γ_C =	150	PCF

UPLIFT PRESSURES

p1 =	575	PSF
p2 =	572	PSF

FACTOR OF SAFETY

F.S. =	1.50

WALL SECTION GEOMETRY

Height of stem =	22	ft
Height of base =	4	ft
Width of Flood Side =	13	ft
Width of Protected Side =	8	ft
Width - Top of Stem =	2	ft
Width - Bottom of Stem =	4	ft
Height of Soil =	2	ft
Width Along Alignment	4	ft
Dist Between Piles	7.33	ft
Height of Flood Water	26	ft
Height of Protected Water	6	ft
Number of Battered Piles In a Row	2	
Number of NonBatter Piles In a Row	2	
Number of Piles In a Row	4	
Number of Pile Rows	1	

FORCES

				MOMENTS ABOUT PROTECTED SIDE TOE			
				Arm	Overturning	Resisting	
W_w =	73.22	KIPS	From W_w	18.50		1354.50	
W_{sl} =	12.48	KIPS	From W_{sl}	18.50		230.88	
W_b =	60.00	KIPS	From W_b	12.50		750.00	
W_{st1} =	26.40	KIPS	From W_{st1}	11.00		290.40	
W_{st2} =	13.20	KIPS	From W_{st2}	9.33		123.20	
W_{sr} =	7.68	KIPS	From W_{sr}	4.00		30.72	
U_{w1} =	0.15	KIPS	From U_{w1}	16.67	2.50		
U_{w2} =	57.20	KIPS	From U_{w2}	12.50	715.00		
Rv	**135.63**	KIPS		**Mv**	717.50	2779.70	2062.20
P_{wl} =	86.53	KIPS	From P_{wl}	8.67	749.91		
P_{sl} =	4.32	KIPS	From P_{sl}	2.00	8.64		
P_{sr} =	4.32	KIPS	From P_{sr}	2.00		8.64	
P_{wr} =	4.61	KIPS	From P_{wr}	2.00		9.22	
Rh	**81.92**	KIPS		**Mh**	758.55	17.86	-740.69
Vr	**158.45**	KIPS		**Mr**	1476.05	2797.55	1321.50
eh	-9.04	FT					
ev	15.21	FT		FS	2.78	OK	

xR	9.74	
Rratio	0.39	RESULTANT FALLS IN KERN (TABLE 4-3)

PILE LOADS

# PILES	4
Iy	268.89
Batter X	1
Batter Y	6
Batter	0.17

VERTICAL LOAD DISTRIBUTION

PILE	V/n [K]	Cx [FT]	(Vex/Iy) [K/FT]	(Vex/Iy)Cx [K/FT]	Pv [K]
4	33.907	11.00	1.36	15.01	48.91
3	33.907	3.67	1.36	5.00	38.91
2	33.907	-3.67	1.36	-5.00	28.90
1	33.907	-11.00	1.36	-15.01	18.90

HORIZONTAL LOAD DISTRIBUTION (ALL PILES)

PILE	Batter	Ph [K]	Net Ph [K]	Pv' [K]	Pv	Pa [K]	Pa [TONS]
4	0.00	0.00	18.49	0.00	48.91	52.29	26.15
3	0.00	0.00	18.49	0.00	38.91	43.08	21.54
2	0.17	4.82	13.67	82.03	110.93	111.77	55.88
1	0.17	3.15	15.34	92.03	110.93	111.98	55.99

NET Rh	73.95
NET Rh/PILE	18.49

HORIZONTAL LOAD DISTRIBUTION (BATTER PILES)

PILE	Batter	Ph [K]	Net Ph [K]	Pv' [K]	Pv	Pa [K]	Pa [TONS]
4	0.00	0.00	36.98	0.00	48.91	61.32	30.66
3	0.00	0.00	36.98	0.00	38.91	53.68	26.84
2	0.17	4.82	32.16	192.96	221.86	224.18	112.09
1	0.17	3.15	33.83	202.96	221.86	224.42	112.21

NET Rh	73.95
NET Rh/PILE	36.98

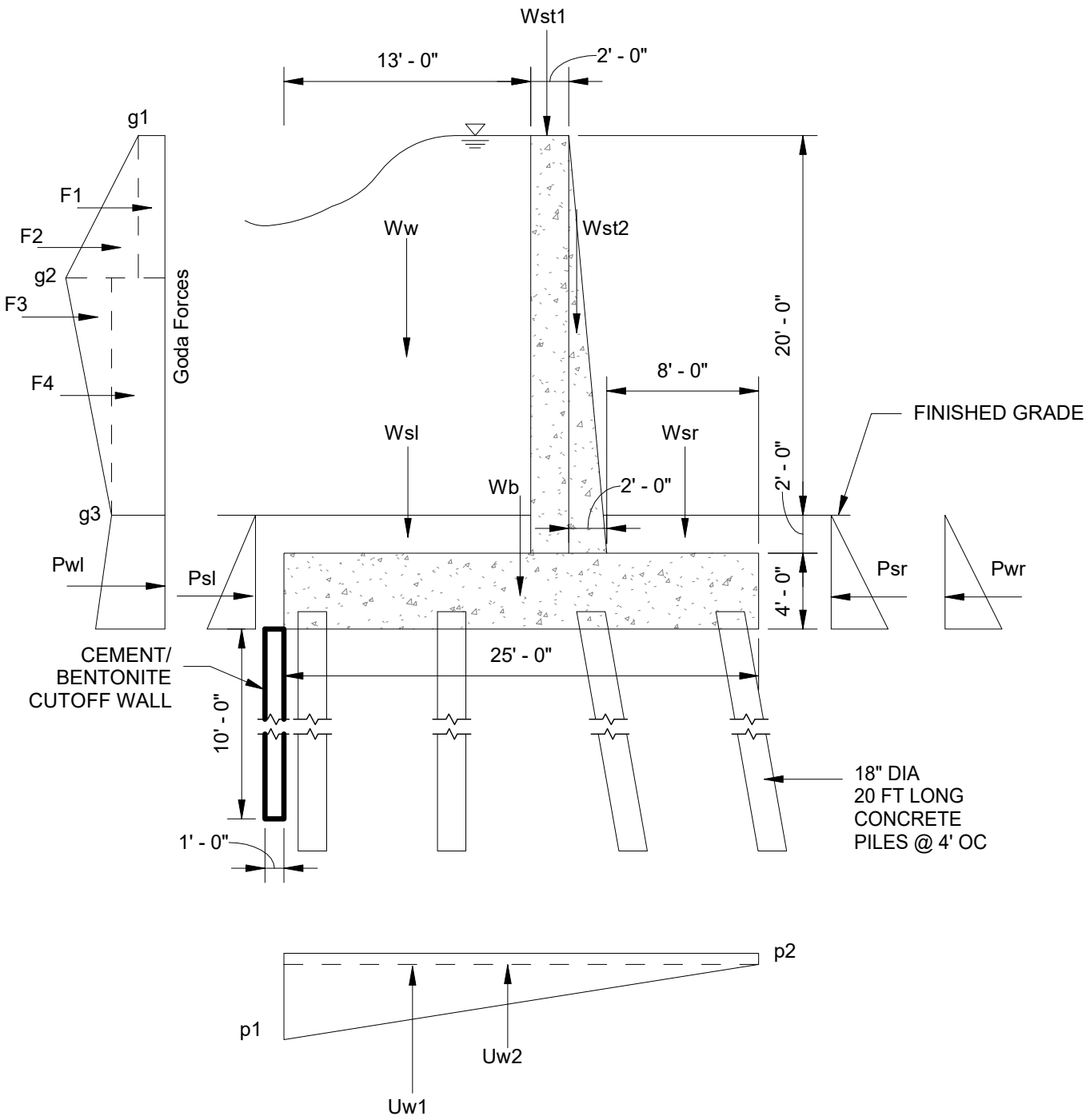

US ARMY CORPS OF ENGINEERS **MIAMI-DADE BACK BAY STORM RISK MANAGEMENT STUDY**	DESIGNED BY: Designer	ISSUE DATE: JAN 2020	CONTRACT NO.:
	DRAWN BY: Author	SOLICITATION NO.:	FILE NUMBER:
LOAD CASE C2 GODA WAVE	CHECKED BY: Checker	**US Army Corps of Engineers ®**	
	SUBMITTED BY:		

CASE C2: GODA WAVE (PER EM 1110-2-2502)

SOIL PROPERTIES

γ_s =	120.00	PCF
Ø=	20.00	
c =	100.00	PSF
K_o =	0.5	

WATER PROPERTIES

γ_W =	64.00	PCF

FACTOR OF SAFETY

F.S. =	1.50

CONCRETE PROPERTIES

γ_C =	150	PCF

Uplift Pressure

p1 =	575	psf
p2 =	572	psf

WALL SECTION GEOMETRY

Height of stem =	22	ft
Height of base =	4	ft
Width of Flood Side =	13	ft
Width of Protected Side =	8	ft
Width - Top of Stem =	2	ft
Width - Bottom of Stem =	4	ft
Height of Soil =	2	ft
Width out of page	4	ft
Dist Between Piles	7.33	ft
Height of Flood Water	26	ft
Height of Protected Water	6	ft
Number of Battered Piles In a Row	2	
Number of NonBatter Piles In a Row	2	
Number of Piles In a Row	4	
Number of Pile Rows	1	

FORCES

Goda F_1 =	7.94	KIPS
Goda F_2 =	0.40	KIPS
Goda F_3 =	9.60	KIPS
Goda F_4 =	15.74	KIPS
P_{wl}=	86.53	KIPS
P_{sl} =	4.32	KIPS
P_{sr} =	4.32	KIPS
P_{wr} =	4.61	KIPS
Rh=	115.60	KIPS
W_w =	73.22	KIPS
W_{sl} =	12.48	KIPS
W_b =	60.00	KIPS
W_{st1} =	26.40	KIPS
W_{st2} =	13.20	KIPS
W_{sr} =	7.68	KIPS
U_{w1} =	0.15	KIPS
U_{w2} =	57.20	KIPS
Rv=	135.63	KIPS
Vr	178.2071	
eh	-9.68	
ev	15.21	

MOMENTS ABOUT PROTECTED SIDE TOE

	Arm	Overturning	Resisting	
From F_1	18	142.85		
From F_2	17.33	6.93		
From F_3	10.67	102.4		
From F_4	8	125.952		
From P_{wl}	8.67	749.91		
From P_{sl}	2	8.64		
From P_{sr}	2		8.64	
From P_{wr}	2		9.22	
Mh		1136.68	17.86	-1118.827
From W_w	18.5		1354.50	
From W_{sl}	18.5		230.88	
From W_b	12.5		750.00	
From W_{st1}	11		290.40	
From W_{st2}	9.33		123.20	
From W_{sr}	4		30.72	
From Uw1	16.67	2.50		
From Uw2	12.5	715.00		
Mv		717.50	2779.70	2062.20
Mr		1854.18	2797.55	943.37
	F.S. =	1.84		

CASE C2 (EM1110-2-2502) CONT'D

Wave Pressure From Goda From CC_Wall Forces on Vertical Wall Rev3 H&H

P_1 =	0.546	ksf
P_2 =	0.496	ksf
P_3 =	0.246	ksf

Force			Arm	Moment
Goda F_1 =	7.94	KIPS	18	142.85
Goda F_2 =	0.40	KIPS	17.33	6.93
Goda F_3 =	9.60	KIPS	10.67	102.4
Goda F_4 =	15.74	KIPS	8	125.95

PILE LOADS

# PILES	4
Iy	268.89
Batter X	1
Batter Y	6
Batter	0.17

VERTICAL LOAD DISTRIBUTION

PILE	V/n [K]	Cx [FT]	(Vex/Iy) [K/FT]	(Vex/Iy)Cx [K/FT]	Pv [K]
4	33.91	11.00	1.36	15.01	48.91
3	33.91	3.67	1.36	5.00	38.91
2	33.91	-3.67	1.36	-5.00	28.90
1	33.91	-11.00	1.36	-15.01	18.90

HORIZONTAL LOAD DISTRIBUTION (ALL PILES)

PILE	Batter	Ph [K]	Net Ph [K]	Pv' [K]	Pv	Pa [K]	Pa [TONS]
4	0.00	0.00	26.91	0.00	48.91	55.83	27.91
3	0.00	0.00	26.91	0.00	38.91	47.31	23.65
2	0.17	4.82	22.09	132.55	161.45	162.95	81.48
1	0.17	3.15	23.76	142.55	161.45	163.19	81.59

NET Rh	107.63
NET Rh/PILE	26.91

HORIZONTAL LOAD DISTRIBUTION (BATTER PILES)

PILE	Batter	Ph [K]	Net Ph [K]	Pv' [K]	Pv	Pa [K]	Pa [TONS]
4	0.00	0.00	53.82	0.00	48.91	72.72	36.36
3	0.00	0.00	53.82	0.00	38.91	66.41	33.20
2	0.17	4.82	49.00	294.00	322.90	326.60	163.30
1	0.17	3.15	50.67	304.00	322.90	326.85	163.43

NET Rh	107.63
NET Rh/PILE	53.82

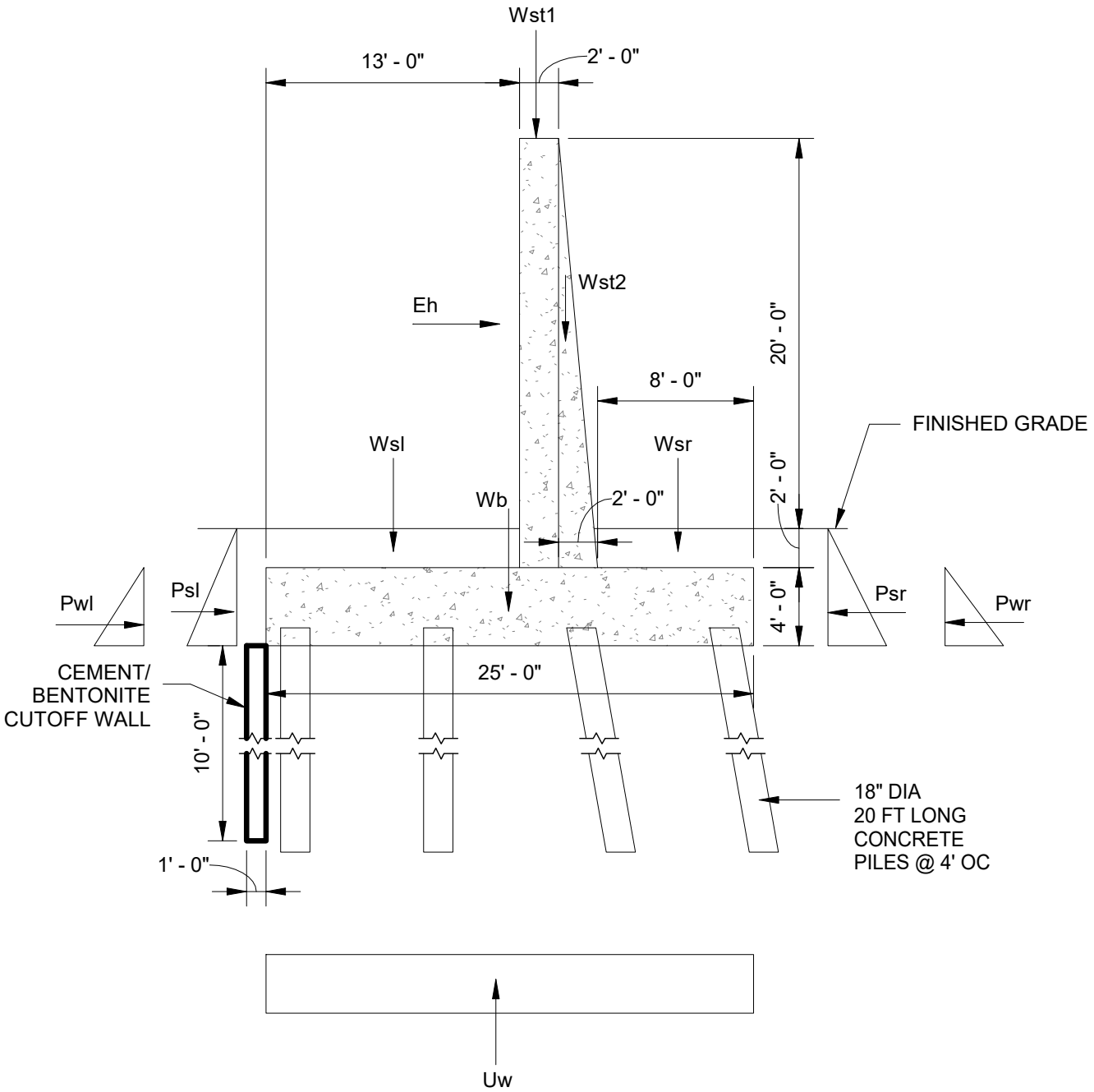

US ARMY CORPS OF ENGINEERS **MIAMI-DADE BACK BAY STORM RISK MANAGEMENT STUDY**	DESIGNED BY: Designer	ISSUE DATE: JAN 2020	CONTRACT NO.:
	DRAWN BY: Author	SOLICITATION NO.:	FILE NUMBER:
LOAD CASE C3 SEISMIC	CHECKED BY: Checker	**US Army Corps of Engineers ®**	
	SUBMITTED BY:		

Seismic Analysis ASCE 7-10 Ch. 15

Assume Site Class D

$S_s = 0.05$

$S_1 = 0.02$

$S_{MS} = F_a S_s = 1.6(0.05) = 0.08$

$S_{M1} = F_v S_1 = 2.4(0.02) = 0.048 = 0.05$

$S_{DS} = \frac{2}{3} S_{MS} = 2/3\,(0.08) = 0.053$

$S_{D1} = 2/3\, S_{M1} = 2/3\,(0.05) = 0.032$

From ASCE 7 Ch. 15, Use $R = 2.0$

From 15.4.1,

$C_s = 0.044\, S_{DS} I_e$ $\quad I_e = 1.25$ Risk Cat. III

$= 0.044(0.053)(1.25)$

$= 0.003$, C_s shall not be taken as less than 0.01

$V = 0.30\, S_{DS}\, W I_e = 0.3(0.053)(1.25)W$

$= 0.02W$

CASE C3: SEISMIC (PER EM 1110-2-2502)

SOIL PROPERTIES

γ_s =	120.00	PCF
Ø=	20.00	
c =	100.00	PSF
K_o =	0.5	

WATER PROPERTIES

γ_W =	64.00	PCF

FACTOR OF SAFETY

F.S. =	1.50

CONCRETE PROPERTIES

γ_C =	150	PCF
C_s =	0.04	

Uplift Forces

p1 =	575	psf
p2 =	572	psf

WALL SECTION GEOMETRY

Height of stem =	22	ft
Height of base =	4	ft
Width of Flood Side =	13	ft
Width of Protected Side =	8	ft
Width - Top of Stem =	2	ft
Width - Bottom of Stem =	4	ft
Height of Soil =	2	ft
Width out of page	4	ft
Dist Between Piles	7.33	ft
Height of Flood Water	16	ft
Height of Protected Water	6	ft
Number of Battered Piles In a Row	2	
Number of NonBatter Piles In a Row	2	
Number of Piles In a Row	4	
Number of Pile Rows	1	

FORCES

P_{wl} =	32.77	KIPS
P_{sl} =	4.32	KIPS
P_{sr} =	4.32	KIPS
P_{wr}=	4.61	KIPS
E_h =	1.992	KIPS
Rh=	30.15	KIPS
W_w =	39.94	KIPS
W_{sl} =	12.48	KIPS
W_b =	60.00	KIPS
W_{st1} =	26.40	KIPS
W_{st2} =	13.20	KIPS
W_{sr} =	7.68	KIPS
U_{w1} =	0.15	KIPS
U_{w2} =	57.20	KIPS
Rv=	102.50	KIPS
Vr	106.84	KIPS
eh	-5.87	
ev	14.11	

MOMENTS ABOUT PROTECTED SIDE TOE

	Arm	Overturning	Resisting	
From P_{wr}	5.33	174.76		
From P_{sl}	2	8.64		
From P_{sr}	2		8.64	
From P_{wl}	6		27.65	
From E_h	15	29.88		
Mh		213.28	36.29	-176.99
From W_w	18.5		738.82	
From W_{sl}	18.5		230.88	
From W_b	12.5		750.00	
From W_{st1}	11		290.40	
From W_{st2}	9.33		123.20	
From W_{sr}	4		30.72	
From U_{w1}	16.67	2.50		
From U_{w2}	12.50	715.00		
Mv		717.50	2164.02	1446.52
Mr		930.78	2200.30	1269.52

F.S. = 8.17

PILE LOADS

# PILES	4
Iy	268.89
Batter X	1
Batter Y	6
Batter	0.17

VERTICAL LOAD DISTRIBUTION

PILE	V/n [K]	Cx [FT]	(Vex/Iy) [K/FT]	(Vex/Iy)Cx [K/FT]	Pv [K]
4	25.62	11.00	0.61	6.76	32.39
3	25.62	3.67	0.61	2.25	27.88
2	25.62	-3.67	0.61	-2.25	23.37
1	25.62	-11.00	0.61	-6.76	18.86

HORIZONTAL LOAD DISTRIBUTION (ALL PILES)

PILE	Batter	Ph [K]	Net Ph [K]	Pv' [K]	Pv	Pa [K]	Pa [TONS]
4	0.00	0.00	5.78	0.00	32.39	32.90	16.45
3	0.00	0.00	5.78	0.00	27.88	28.47	14.24
2	0.17	3.89	1.88	11.30	34.67	34.72	17.36
1	0.17	3.14	2.63	15.81	34.67	34.77	17.39

NET Rh	23.11
NET Rh/PILE	5.78

HORIZONTAL LOAD DISTRIBUTION (BATTER PILES)

PILE	Batter	Ph [K]	Net Ph [K]	Pv' [K]	Pv	Pa [K]	Pa [TONS]
4	0.00	0.00	11.56	0.00	32.39	34.39	17.19
3	0.00	0.00	11.56	0.00	27.88	30.18	15.09
2	0.17	3.89	7.66	45.97	69.34	69.76	34.88
1	0.17	3.14	8.41	50.48	69.34	69.85	34.92

NET Rh	23.11
NET Rh/PILE	11.56

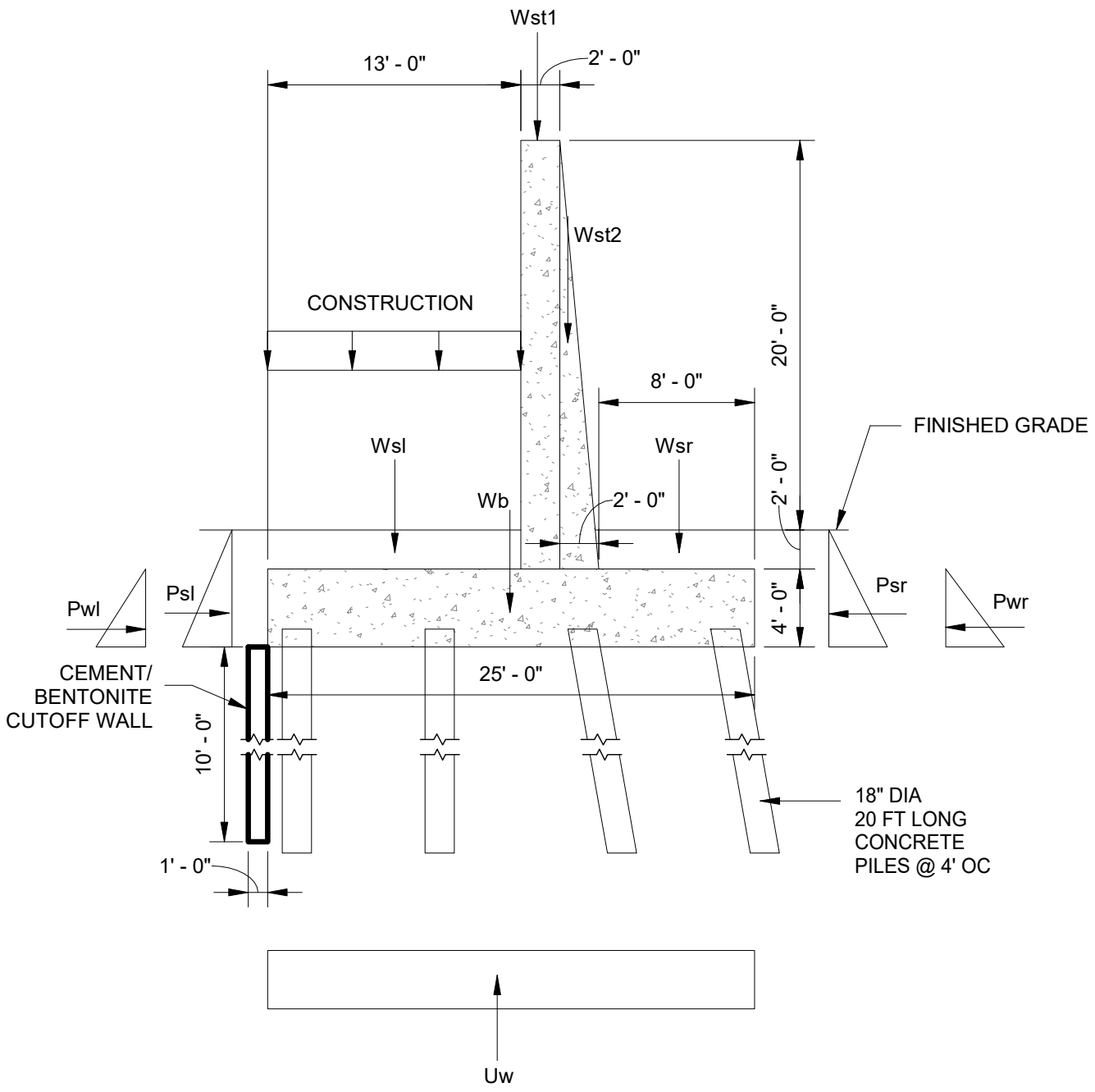

US ARMY CORPS OF ENGINEERS **MIAMI-DADE BACK BAY STORM RISK MANAGEMENT STUDY**	DESIGNED BY: Designer	ISSUE DATE: JAN 2020	CONTRACT NO.:
	DRAWN BY: Author	SOLICITATION NO.:	FILE NUMBER:
LOAD CASE C4 CONSTRUCTION	CHECKED BY: Checker	**US Army Corps of Engineers ®**	
	SUBMITTED BY:		

CASE C4 CONSTRUCTION (PER EM 1110-2-2502)

SOIL PROPERTIES

γ_s =	120.00	PCF
Ø=	20.00	
c =	100.00	PSF
K_o =	0.5	

WATER PROPERTIES

γ_W =	64.00	PCF

FACTOR OF SAFETY

F.S. =	1.50

CONCRETE PROPERTIES

γ_C =	150	PCF

Uplift Pressure

p=	0	PSF

WALL SECTION GEOMETRY

Height of stem =	22	ft
Height of base =	4	ft
Width of Flood Side =	13	ft
Width of Protected Side =	8	ft
Width - Top of Stem =	2	ft
Width - Bottom of Stem =	4	ft
Height of Soil =	2	ft
Width out of page	4	ft
Dist Between Piles	7.33	ft
Height of Flood Water	8	ft
Height of Protected Water	6	ft
Number of Battered Piles In a Row	2	
Number of NonBatter Piles In a Row	2	
Number of Piles In a Row	4	
Number of Pile Rows	1	

FORCES

P_{wl} =	8.19	KIPS
P_{sl} =	4.32	KIPS
P_{sr} =	4.32	KIPS
P_{wr}=	4.61	KIPS
Rh=	3.58	KIPS
W_w =	0.00	KIPS
W_{sl} =	12.48	KIPS
W_b =	60.00	KIPS
W_{st1} =	26.40	KIPS
W_{st2} =	13.20	KIPS
W_{sr} =	7.68	KIPS
U_w =	0.00	KIPS
Con	5.2	KIPS
Rv=	124.96	KIPS
Vr	124.96	KIPS
eh	1.62	
ev	12.18	

MOMENTS ABOUT PROTECTED SIDE TOE

	Arm	Overturning	Resisting	
From P_{wr}	2.67	21.85		
From P_{sl}	2	8.64		
From P_{sr}	2		8.64	
From P_{wl}	6		27.65	
Mh		30.49	36.29	5.80
From W_w	18.5		0.00	
From W_{sl}	18.5		230.88	
From W_b	12.5		750.00	
From W_{st1}	11		290.40	
From W_{st2}	9.33		123.20	
From W_{sr}	4		30.72	
From Uw	12.5		0.00	
From Con	18.5		96.2	
Mv		0.00	1521.40	1521.40
Mr		30.49	1557.69	1527.20

F.S. = 262.19

PILE LOADS

# PILES	4
Iy	268.89
Batter X	1
Batter Y	6
Batter	0.17

VERTICAL LOAD DISTRIBUTION

PILE	V/n [K]	Cx [FT]	(Vex/Iy) [K/FT]	(Vex/Iy)Cx [K/FT]	Pv [K]
4	31.24	11.00	-0.15	-1.66	29.58
3	31.24	3.67	-0.15	-0.55	30.69
2	31.24	-3.67	-0.15	0.55	31.79
1	31.24	-11.00	-0.15	1.66	32.90

HORIZONTAL LOAD DISTRIBUTION (ALL PILES)

PILE	Batter	Ph [K]	Net Ph [K]	Pv' [K]	Pv	Pa [K]	Pa [TONS]
4	0.00	0.00	-1.80	0.00	29.58	29.63	14.82
3	0.00	0.00	-1.80	0.00	30.69	30.74	15.37
2	0.17	5.30	-7.10	-42.59	-10.80	12.92	6.46
1	0.17	5.48	-7.28	-43.70	-10.80	13.02	6.51

NET Rh	-7.20
NET Rh/PILE	-1.80

HORIZONTAL LOAD DISTRIBUTION (BATTER PILES)

PILE	Batter	Ph [K]	Net Ph [K]	Pv' [K]	Pv	Pa [K]	Pa [TONS]
4	0.00	0.00	-3.60	0.00	29.58	29.80	14.90
3	0.00	0.00	-3.60	0.00	30.69	30.90	15.45
2	0.17	5.30	-8.90	-53.39	-21.60	23.36	11.68
1	0.17	5.48	-9.08	-54.50	-21.60	23.43	11.71

NET Rh	-7.20
NET Rh/PILE	-3.60

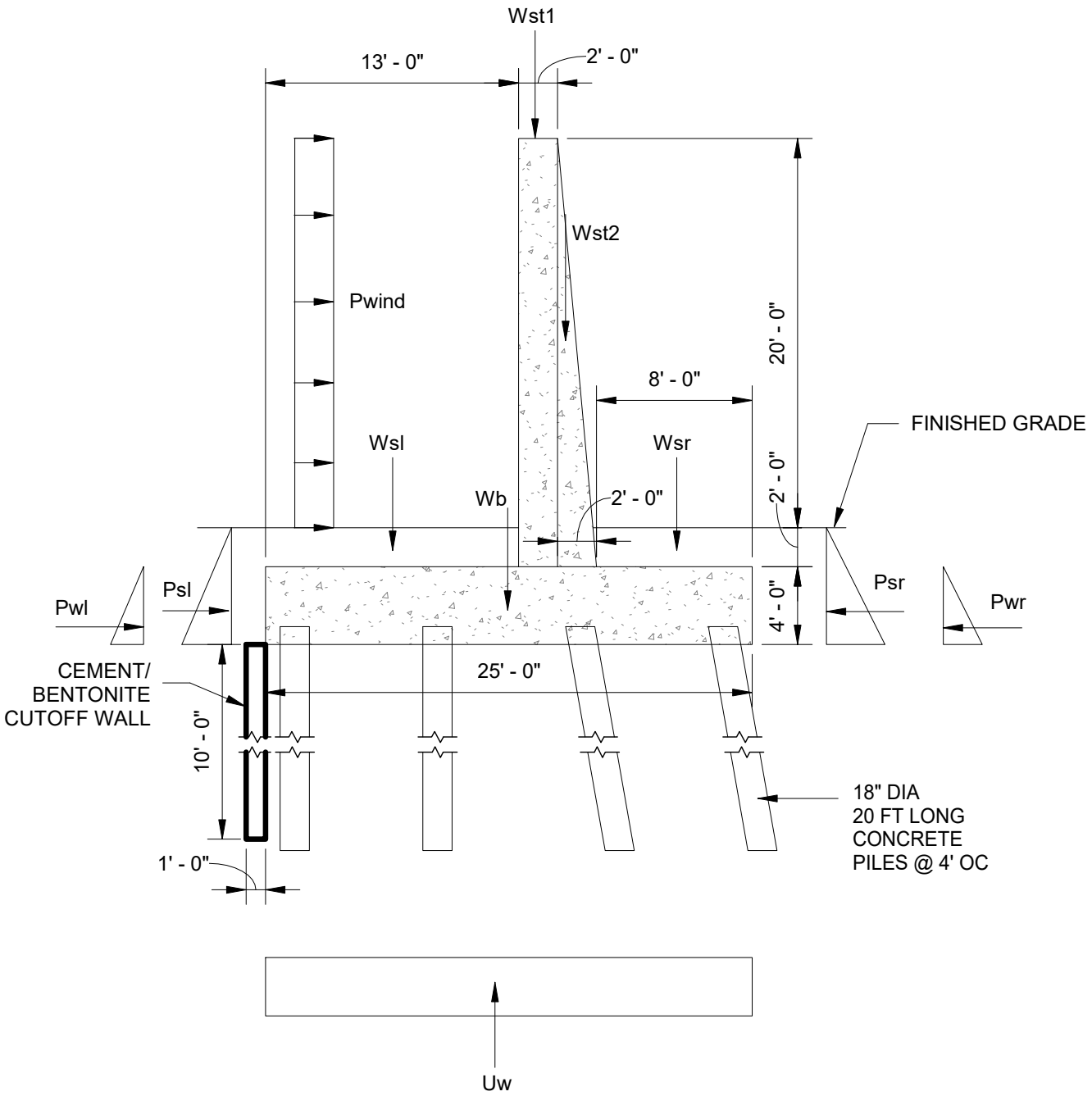

US ARMY CORPS OF ENGINEERS **MIAMI-DADE BACK BAY STORM RISK MANAGEMENT STUDY**	DESIGNED BY: Designer	ISSUE DATE: JAN 2020	CONTRACT NO.:
	DRAWN BY: Author	SOLICITATION NO.:	FILE NUMBER:
LOAD CASE C5 WIND	CHECKED BY: Checker	**US Army Corps of Engineers ®**	
	SUBMITTED BY:		

Wind Analysis ASCE 7-10 Ch. 26

V = 180 mph (Risk Category III)

$q = 0.00256\, k_z\, k_{zt}\, k_d\, V^2$

$k_z = 1.12$ Table 27.3-1, Exp D
$k_{zt} = 1.0$
$k_d = 0.85$ Table 26.6-1

$q = 0.00256\,(1.12)(1.0)(0.85)(180)^2 = 79.0$ PSF

$P = q_h\, G\, C_f$ 29.4-1

$G = 0.85$ (26.9.1)
$C_f = 1.3$ (29.4-1) $s/h = 1$, Aspect Ratio ≥ 45 very Long compared to Height

$P = (79.0)(0.85)(1.3)$

$= 87.3$ PSF

CASE C5: WIND (PER EM 1110-2-2502)

SOIL PROPERTIES

γ_s =	120.00	PCF
Ø=	20.00	
c =	100.00	PSF
K_o =	0.5	

WATER PROPERTIES

γ_W =	64.00	PCF

FACTOR OF SAFETY

F.S. =	1.50	

CONCRETE PROPERTIES

γ_C =	150	PCF
Pwind	87.3	PSF

Uplift Forces

p1 =	575	psf
p2 =	572	psf

WALL SECTION GEOMETRY

Height of stem =	22	ft
Height of base =	4	ft
Width of Flood Side =	13	ft
Width of Protected Side =	8	ft
Width - Top of Stem =	2	ft
Width - Bottom of Stem =	4	ft
Height of Soil =	2	ft
Width out of page	4	ft
Dist Between Piles	7.33	ft
Height of Flood Water	16	ft
Height of Protected Water	6	ft
Number of Battered Piles In a Row	2	
Number of NonBatter Piles In a Row	2	
Number of Piles In a Row	4	
Number of Pile Rows	1	

FORCES

P_{wl} =	32.77	KIPS
P_{sl} =	4.32	KIPS
P_{sr} =	4.32	KIPS
P_{wr}=	4.61	KIPS
Wind	6.984	KIPS
Rh=	35.14	KIPS
W_w =	39.94	KIPS
W_{sl} =	12.48	KIPS
W_b =	60.00	KIPS
W_{st1} =	26.40	KIPS
W_{st2} =	13.20	KIPS
W_{sr} =	7.68	KIPS
U_{w1} =	0.15	KIPS
U_{w2} =	57.20	KIPS
Rv=	102.50	KIPS
Vr	108.35	KIPS
eh	-5.93	
ev	14.11	

MOMENTS ABOUT PROTECTED SIDE TOE

	Arm	Overturning	Resisting	
From P_{wr}	5.33	174.76		
From Psl	2	8.64		
From Psr	2		8.64	
From Pwl	6		27.65	
From Wind	8.8	61.46		
Mh		244.86	36.29	-208.57
From Ww	18.5		738.82	
From Wsl	18.5		230.88	
From Wb	12.5		750.00	
From Wst1	11		290.40	
From Wst2	9.33		123.20	
From Wsr	4		30.72	
From U_{w1}	16.67	2.50		
From U_{w2}	12.50	715.00		
Mv		717.50	2164.02	1446.52
Mr		962.36	2200.30	1237.94
F.S. =		6.94		

PILE LOADS

# PILES	4
Iy	268.89
Batter X	1
Batter Y	6
Batter	0.17

VERTICAL LOAD DISTRIBUTION

PILE	V/n [K]	Cx [FT]	(Vex/Iy) [K/FT]	(Vex/Iy)Cx [K/FT]	Pv [K]
4	25.62	11.00	0.61	6.76	32.39
3	25.62	3.67	0.61	2.25	27.88
2	25.62	-3.67	0.61	-2.25	23.37
1	25.62	-11.00	0.61	-6.76	18.86

HORIZONTAL LOAD DISTRIBUTION (ALL PILES)

PILE	Batter	Ph [K]	Net Ph [K]	Pv' [K]	Pv	Pa [K]	Pa [TONS]
4	0.00	0.00	7.03	0.00	32.39	33.14	16.57
3	0.00	0.00	7.03	0.00	27.88	28.75	14.38
2	0.17	3.89	3.13	18.79	42.16	42.27	21.14
1	0.17	3.14	3.88	23.30	42.16	42.34	21.17

NET Rh	28.11
NET Rh/PILE	7.03

HORIZONTAL LOAD DISTRIBUTION (BATTER PILES)

PILE	Batter	Ph [K]	Net Ph [K]	Pv' [K]	Pv	Pa [K]	Pa [TONS]
4	0.00	0.00	14.05	0.00	32.39	35.30	17.65
3	0.00	0.00	14.05	0.00	27.88	31.22	15.61
2	0.17	3.89	10.16	60.95	84.32	84.93	42.46
1	0.17	3.14	10.91	65.46	84.32	85.02	42.51

NET Rh	28.11
NET Rh/PILE	14.05

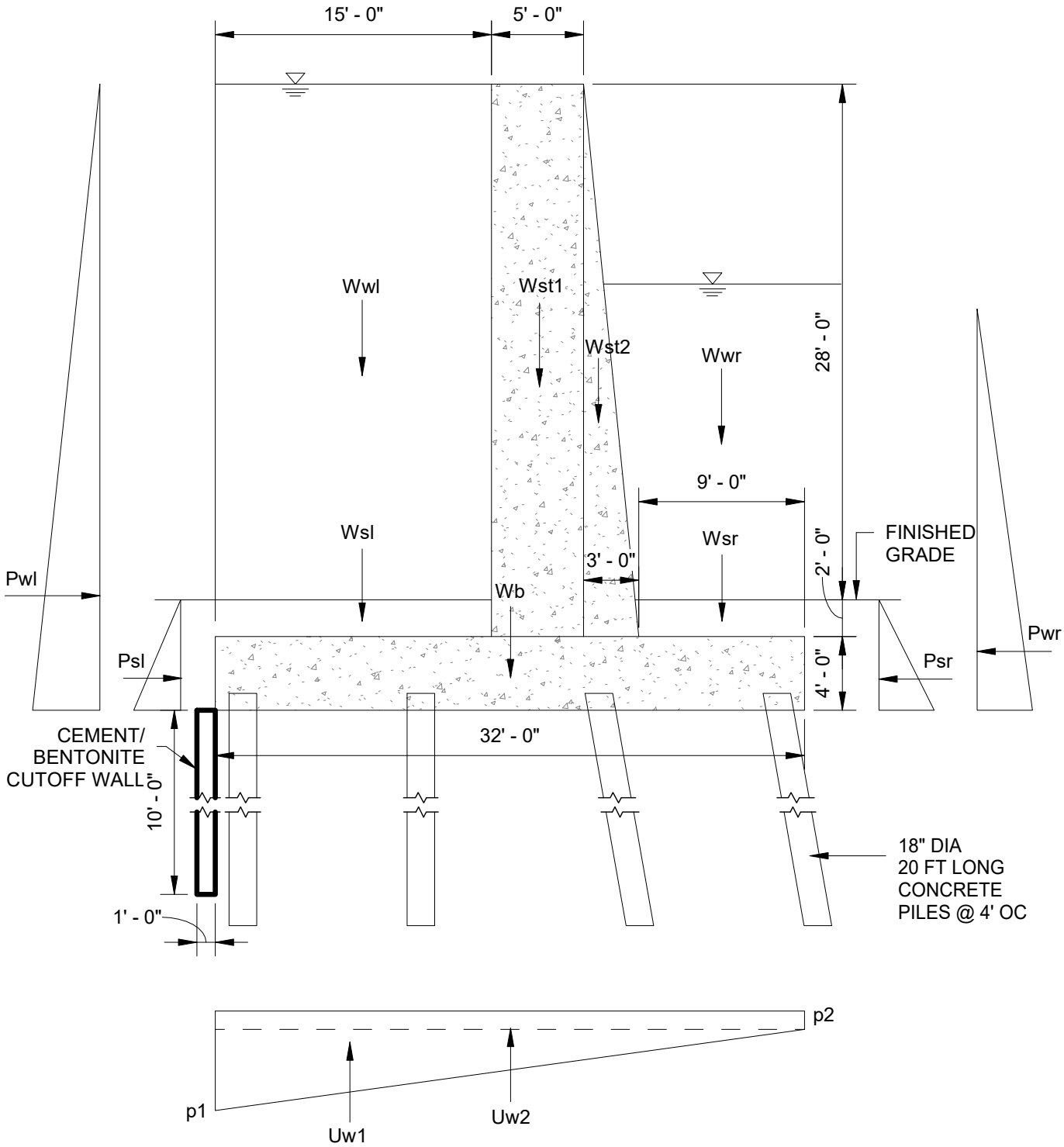

US ARMY CORPS OF ENGINEERS **MIAMI-DADE BACK BAY STORM RISK MANAGEMENT STUDY**	DESIGNED BY: Designer	ISSUE DATE: JAN 2020	CONTRACT NO.:
	DRAWN BY: Author	SOLICITATION NO.:	FILE NUMBER:
LOAD CASE C1 HIGH WATER 30FT WALL	CHECKED BY: Checker	**US Army Corps of Engineers ®**	
	SUBMITTED BY:		

CASE C1: HIGH WATER (PER EM 1110-2-2502)

SOIL PROPERTIES

γ_s =	120.00	PCF
Ø=	20.00	
c =	100.00	PSF
K_o =	0.5	

WATER PROPERTIES

γ_W =	64.00	PCF

CONCRETE PROPERTIES

γ_C =	150	PCF

UPLIFT PRESSURES

p1 =	610	psf
p2 =	605	psf

FACTOR OF SAFETY

F.S. =	1.50

WALL SECTION GEOMETRY

Height of stem =	30	ft
Height of base =	4	ft
Width of Flood Side =	15	ft
Width of Protected Side =	9	ft
Width - Top of Stem =	5	ft
Width - Bottom of Stem =	8	ft
Height of Soil =	2	ft
Width Along Alignment	4	ft
Dist Between Piles	9.67	ft
Height of Flood Water	34	ft
Height of Protected Water	6	ft
Number of Battered Piles In a Row	2	
Number of NonBatter Piles In a Row	2	
Number of Piles In a Row	4	
Number of Pile Rows	1	

FORCES

				MOMENTS ABOUT PROTECTED SIDE TOE				
					Arm	Overturning	Resisting	
W_{wl} =	115.20	KIPS		From W_{wl}	24.50		2822.40	
W_{wr} =	37.79	KIPS		From W_{wr}	4.50		170.04	
W_{sl} =	14.40	KIPS		From W_{sl}	24.50		352.80	
W_b =	76.80	KIPS		From W_b	16.00		1228.80	
W_{st1} =	90.00	KIPS		From W_{st1}	14.50		1305.00	
W_{st2} =	27.00	KIPS		From W_{st2}	11.00		297.00	
W_{sr} =	8.64	KIPS		From W_{sr}	4.50		38.88	
U_{w1} =	0.32	KIPS		From U_{w1}	21.33	6.83		
U_{w2} =	77.44	KIPS		From U_{w2}	16.00	1239.04		
Rv	**254.28**	KIPS			**Mv**	1245.87	6214.92	4969.05
P_{wl} =	147.97	KIPS		From P_{wl}	11.33	1676.97		
P_{sl} =	4.32	KIPS		From P_{sl}	2.00	8.64		
P_{sr} =	4.32	KIPS		From P_{sr}	2.00		8.64	
P_{wr} =	64.23	KIPS		From P_{wr}	7.47		479.55	
Rh	**83.74**	KIPS			**Mh**	1685.61	488.19	-1197.42
Vr	**267.71**	KIPS			**Mr**	2931.48	6703.10	3771.63
eh	-14.30	FT						
ev	19.54	FT			FS	4.15	OK	
xR	14.83							
Rratio	0.46	RESULTANT FALLS IN KERN (TABLE 4-3)						

PILE LOADS

# PILES	4
Iy	467.22
Batter X	1
Batter Y	6
Batter	0.17

VERTICAL LOAD DISTRIBUTION

PILE	V/n [K]	Cx [FT]	(Vex/Iy) [K/FT]	(Vex/Iy)Cx [K/FT]	Pv [K]
4	63.57	14.50	1.93	27.95	91.52
3	63.57	4.83	1.93	9.32	72.89
2	63.57	-4.83	1.93	-9.32	54.25
1	63.57	-14.50	1.93	-27.95	35.62

HORIZONTAL LOAD DISTRIBUTION (ALL PILES)

PILE	Batter	Ph [K]	Net Ph [K]	Pv' [K]	Pv	Pa [K]	Pa [TONS]
4	0.00	0.00	17.19	0.00	91.52	93.12	46.56
3	0.00	0.00	17.19	0.00	72.89	74.89	37.44
2	0.17	9.04	8.15	48.89	103.15	103.47	51.73
1	0.17	5.94	11.25	67.52	103.15	103.76	51.88

NET Rh	68.76
NET Rh/PILE	17.19

HORIZONTAL LOAD DISTRIBUTION (BATTER PILES)

PILE	Batter	Ph [K]	Net Ph [K]	Pv' [K]	Pv	Pa [K]	Pa [TONS]
4	0.00	0.00	34.38	0.00	91.52	97.76	48.88
3	0.00	0.00	34.38	0.00	72.89	80.59	40.29
2	0.17	9.04	25.34	152.04	206.29	207.84	103.92
1	0.17	5.94	28.44	170.67	206.29	208.24	104.12

NET Rh	68.76
NET Rh/PILE	34.38

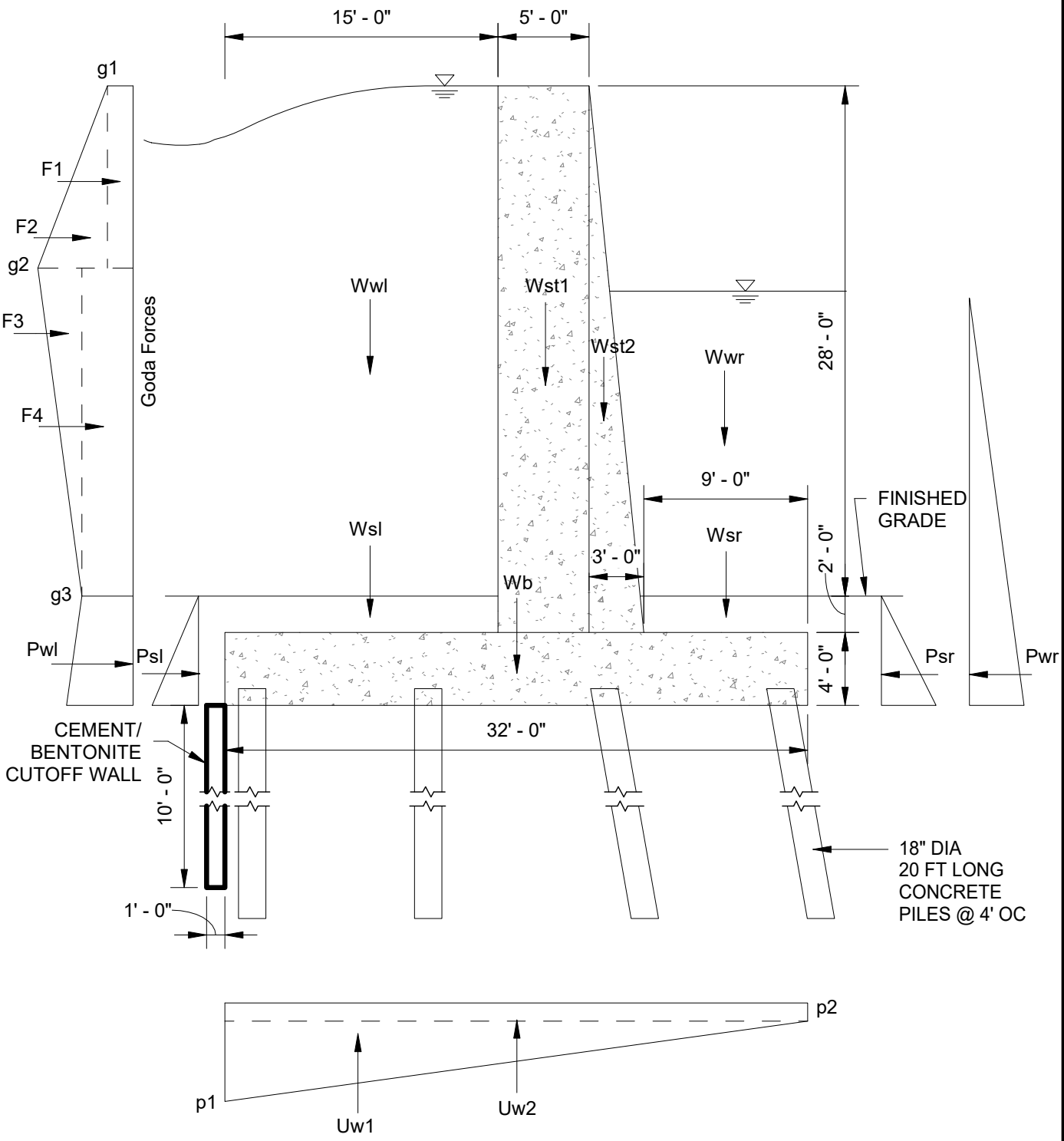

US ARMY CORPS OF ENGINEERS **MIAMI-DADE BACK BAY STORM RISK MANAGEMENT STUDY**	DESIGNED BY: Designer	ISSUE DATE: JAN 2020	CONTRACT NO.:
	DRAWN BY: Author	SOLICITATION NO.:	FILE NUMBER:
LOAD CASE C2 GODA WAVE 30 FT WALL	CHECKED BY: Checker	**US Army Corps of Engineers ®**	
	SUBMITTED BY:		

CASE C2: GODA WAVE (PER EM 1110-2-2502)

SOIL PROPERTIES

γ_s =	120.00	PCF
Ø=	20.00	
c =	100.00	PSF
K_o =	0.5	

WATER PROPERTIES

γ_W =	64.00	PCF

FACTOR OF SAFETY

F.S. =	1.50	

CONCRETE PROPERTIES

γ_C =	150	PCF

UPLIFT PRESSURE

p1 =	610	psf
p2 =	605	psf

WALL SECTION GEOMETRY

Height of stem =	30	ft
Height of base =	4	ft
Width of Flood Side =	15	ft
Width of Protected Side =	9	ft
Width - Top of Stem =	5	ft
Width - Bottom of Stem =	8	ft
Height of Soil =	2	ft
Width out of page	4	ft
Dist Between Piles	9.67	ft
Height of Flood Water	34	ft
Height of Protected Water	6	ft
Number of Battered Piles In a Row	2	
Number of NonBatter Piles In a Row	2	
Number of Piles In a Row	4	
Number of Pile Rows	1	

FORCES

Goda F_1 =	3.47	KIPS
Goda F_2 =	2.63	
Goda F_3 =	9.60	
Goda F_4 =	15.74	
P_{wl}=	147.97	KIPS
P_{sl} =	4.32	KIPS
P_{sr} =	4.32	KIPS
P_{wr} =	64.23	KIPS
Rh=	115.19	KIPS
W_{wl} =	115.20	KIPS
W_{wr} =	43.01	KIPS
W_{sl} =	14.40	KIPS
W_b =	76.80	KIPS
W_{st1} =	90.00	KIPS
W_{st2} =	27.00	KIPS
W_{sr} =	8.64	KIPS
U_{w1} =	0.32	KIPS
U_{w2} =	77.44	KIPS
Rv=	254.28	KIPS
Vr	279.15	
eh	-13.32	
ev	19.63	

MOMENTS ABOUT PROTECTED SIDE TOE

	Arm	Overturning	Resisting	
From F_1	18	62.50		
From F_2	17.33	45.62		
From F_3	10.67	102.4		
From F_4	8	125.95		
From P_{wl}	11.33	1676.97		
From Psl	2	8.64		
From Psr	2		8.64	
From Pwr	7.467		479.55	
Mh		2022.08	488.1888	-1533.891
From Wwl	24.5		2822.40	
From Wwr	4.5		193.54	
From Wsl	24.5		352.80	
From Wb	16		1228.80	
From Wst1	14.5		1305.00	
From Wst2	11		297.00	
From Wsr	4.5		38.88	
From Uw1	21.33	6.83		
From Uw2	16	1239.04		
Mv		1245.87	6238.42	4992.55
Mr		3267.95	6726.60	3458.66

F.S. = 3.25 OK

CASE C2 (EM1110-2-2502) CONT'D

Wave Pressure From Goda From CC_Wall Forces on Vertical Wall Rev3 H&H

P_1 =	0.546	ksf
P_2 =	0.217	ksf
P_3 =	0.246	ksf

Force			Arm	Moment
Goda F_1 =	3.47	KIPS	18	62.496
Goda F_2 =	2.63	KIPS	17.33333	45.6213333
Goda F_3 =	9.60	KIPS	10.66667	102.4
Goda F_4 =	15.74	KIPS	8	125.952

PILE LOADS

# PILES	4
Iy	467.22
Batter X	1
Batter Y	6
Batter	0.17

VERTICAL LOAD DISTRIBUTION

PILE	V/n [K]	Cx [FT]	(Vex/Iy) [K/FT]	(Vex/Iy)Cx [K/FT]	Pv [K]
4	63.57	14.50	1.98	28.68	92.25
3	63.57	4.83	1.98	9.56	73.13
2	63.57	-4.83	1.98	-9.56	54.01
1	63.57	-14.50	1.98	-28.68	34.89

HORIZONTAL LOAD DISTRIBUTION (ALL PILES)

PILE	Batter	Ph [K]	Net Ph [K]	Pv' [K]	Pv	Pa [K]	Pa [TONS]
4	0.00	0.00	25.09	0.00	92.25	95.60	47.80
3	0.00	0.00	25.09	0.00	73.13	77.31	38.66
2	0.17	9.00	16.09	96.55	150.56	151.42	75.71
1	0.17	5.82	19.28	115.67	150.56	151.79	75.89

NET Rh	100.37
NET Rh/PILE	25.09

HORIZONTAL LOAD DISTRIBUTION (BATTER PILES)

PILE	Batter	Ph [K]	Net Ph [K]	Pv' [K]	Pv	Pa [K]	Pa [TONS]
4	0.00	0.00	50.19	0.00	92.25	105.02	52.51
3	0.00	0.00	50.19	0.00	73.13	88.69	44.35
2	0.17	9.00	41.19	247.11	301.12	303.92	151.96
1	0.17	5.82	44.37	266.23	301.12	304.37	152.19

NET Rh	100.37
NET Rh/PILE	50.19

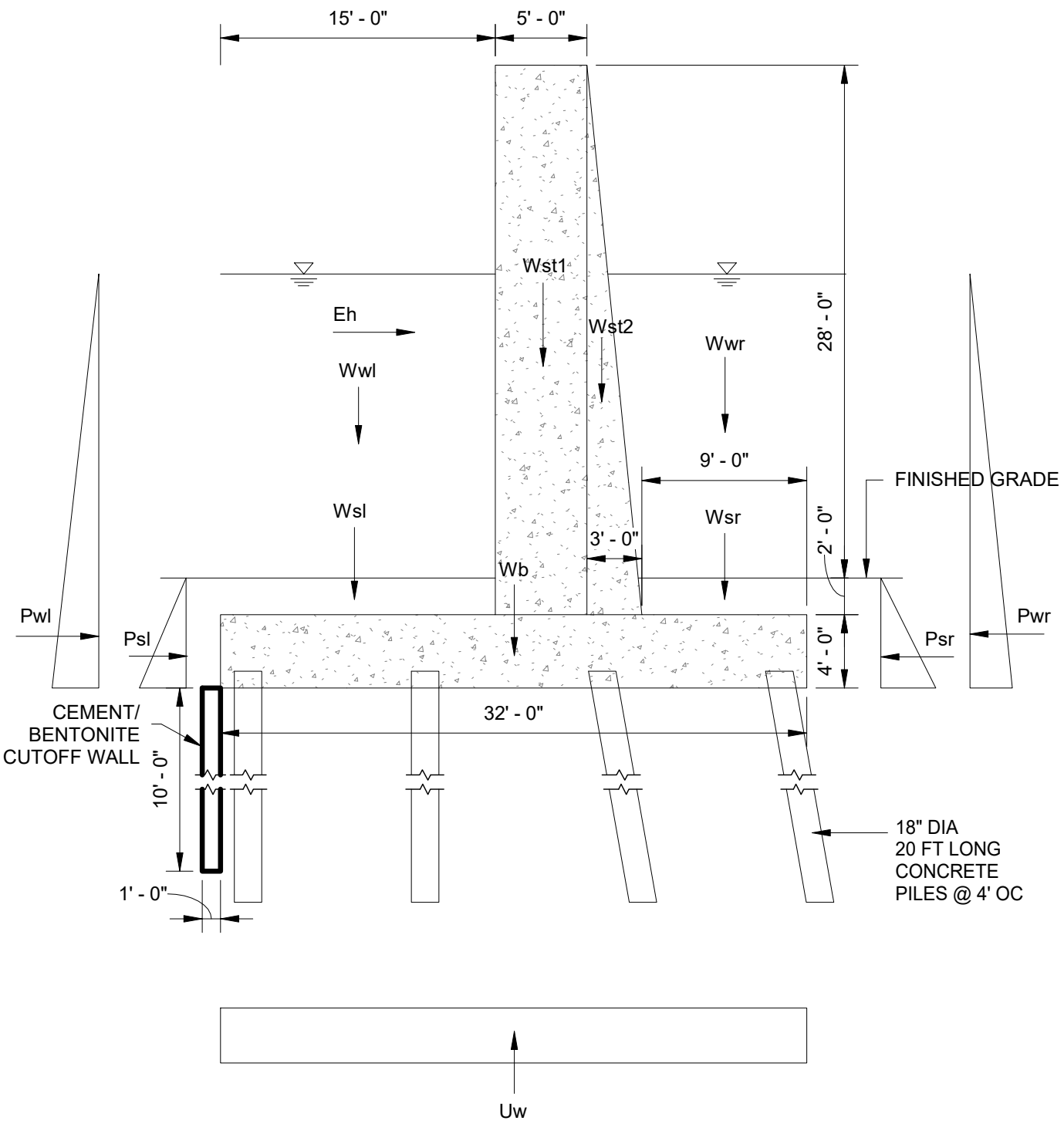

US ARMY CORPS OF ENGINEERS **MIAMI-DADE BACK BAY STORM RISK MANAGEMENT STUDY**	DESIGNED BY: Designer	ISSUE DATE: JAN 2020	CONTRACT NO.:
	DRAWN BY: Author	SOLICITATION NO.:	FILE NUMBER:
LOAD CASE C3 SEISMIC 30FT WALL	CHECKED BY: Checker	**US Army Corps of Engineers ®**	
	SUBMITTED BY:		

Seismic Analysis ASCE 7-10 Ch. 15

Assume Site Class D

$S_s = 0.05$

$S_1 = 0.02$

$S_{MS} = F_a S_s = 1.6(0.05) = 0.08$

$S_{M1} = F_v S_1 = 2.4(0.02) = 0.048 = 0.05$

$S_{DS} = \frac{2}{3} S_{MS} = 2/3\,(0.08) = 0.053$

$S_{D1} = 2/3\, S_{M1} = 2/3\,(0.05) = 0.032$

From ASCE 7 Ch. 15, Use $R = 2.0$

From 15.4.1,

$C_s = 0.044\, S_{DS} I_e$ $\quad I_e = 1.25$ Risk Cat. III

$= 0.044(0.053)(1.25)$

$= 0.003$, C_s shall not be taken as less than 0.01

$V = 0.30\, S_{DS}\, W I_e = 0.3(0.053)(1.25)W$

$= 0.02W$

CASE C3: SEISMIC (PER EM 1110-2-2502)

SOIL PROPERTIES

γ_s =	120.00	PCF
Ø=	20.00	
c =	100.00	PSF
K_o =	0.5	

WATER PROPERTIES

γ_W =	64.00	PCF

FACTOR OF SAFETY

F.S. =	1.50	

CONCRETE PROPERTIES

γ_C =	150	PCF
C_s =	0.04	

UPLIFT PRESSURE

p1 =	610	psf
p2 =	605	psf

WALL SECTION GEOMETRY

Height of stem =	30	ft
Height of base =	4	ft
Width of Flood Side =	15	ft
Width of Protected Side =	9	ft
Width - Top of Stem =	5	ft
Width - Bottom of Stem =	8	ft
Height of Soil =	2	ft
Width out of page	4	ft
Dist Between Piles	9.67	ft
Height of Flood Water	34	ft
Height of Protected Water	6	ft
Number of Battered Piles In a Row	2	
Number of NonBatter Piles In a Row	2	
Number of Piles In a Row	4	
Number of Pile Rows	1	

FORCES

P_{wl} =	64.23	KIPS
P_{sl} =	4.32	KIPS
P_{sr} =	4.32	KIPS
P_{wr}=	64.23	KIPS
E_h =	3.876	KIPS
Rh=	3.88	KIPS
W_{wl} =	62.98	KIPS
Wwr	44.08	KIPS
W_{sl} =	14.40	KIPS
W_b =	76.80	KIPS
W_{st1} =	90.00	KIPS
W_{st2} =	27.00	KIPS
W_{sr} =	8.64	KIPS
U_{w1} =	0.32	KIPS
U_{w2} =	77.44	KIPS
Rv=	202.38	KIPS
Vr	202.41	KIPS
eh	-19	
ev	18.37	

MOMENTS ABOUT PROTECTED SIDE TOE

	Arm	Overturning	Resisting	
From P_{wr}	7.47	479.55		
From Psl	2	8.64		
From Psr	2		8.64	
From Pwl	7.47		479.55	
From E_h	19	73.64		
Mh		561.83	488.19	-73.64
From Wwl	24.5		1542.91	
From Wwr	4.5		198.37	
From Wsl	24.5		352.80	
From Wb	16		1228.80	
From Wst1	14.5		1305.00	
From Wst2	11		297.00	
From Wsr	4.5		38.88	
From U_{w1}	21.33	6.83		
From U_{w2}	16.00	1239.04		
Mv		1245.87	4963.77	3717.90
Mr		1807.70	5451.96	3644.26

F.S. = 50.48 OK

PILE LOADS

# PILES	4
Iy	467.22
Batter X	1
Batter Y	6
Batter	0.17

VERTICAL LOAD DISTRIBUTION

PILE	V/n [K]	Cx [FT]	(Vex/Iy) [K/FT]	(Vex/Iy)Cx [K/FT]	Pv [K]
4	50.59	14.50	1.03	14.89	65.49
3	50.59	4.83	1.03	4.96	55.56
2	50.59	-4.83	1.03	-4.96	45.63
1	50.59	-14.50	1.03	-14.89	35.70

HORIZONTAL LOAD DISTRIBUTION (ALL PILES)

PILE	Batter	Ph [K]	Net Ph [K]	Pv' [K]	Pv	Pa [K]	Pa [TONS]
4	0.00	0.00	-2.42	0.00	65.49	65.53	32.77
3	0.00	0.00	-2.42	0.00	55.56	55.61	27.81
2	0.17	7.60	-10.02	-60.15	-14.52	17.64	8.82
1	0.17	5.95	-8.37	-50.22	-14.52	16.76	8.38

NET Rh	-9.68
NET Rh/PILE	-2.42

HORIZONTAL LOAD DISTRIBUTION (BATTER PILES)

PILE	Batter	Ph [K]	Net Ph [K]	Pv' [K]	Pv	Pa [K]	Pa [TONS]
4	0.00	0.00	-4.84	0.00	65.49	65.67	32.83
3	0.00	0.00	-4.84	0.00	55.56	55.77	27.88
2	0.17	7.60	-12.44	-74.67	-29.04	31.59	15.80
1	0.17	5.95	-10.79	-64.74	-29.04	30.98	15.49

NET Rh	-9.68
NET Rh/PILE	-4.84

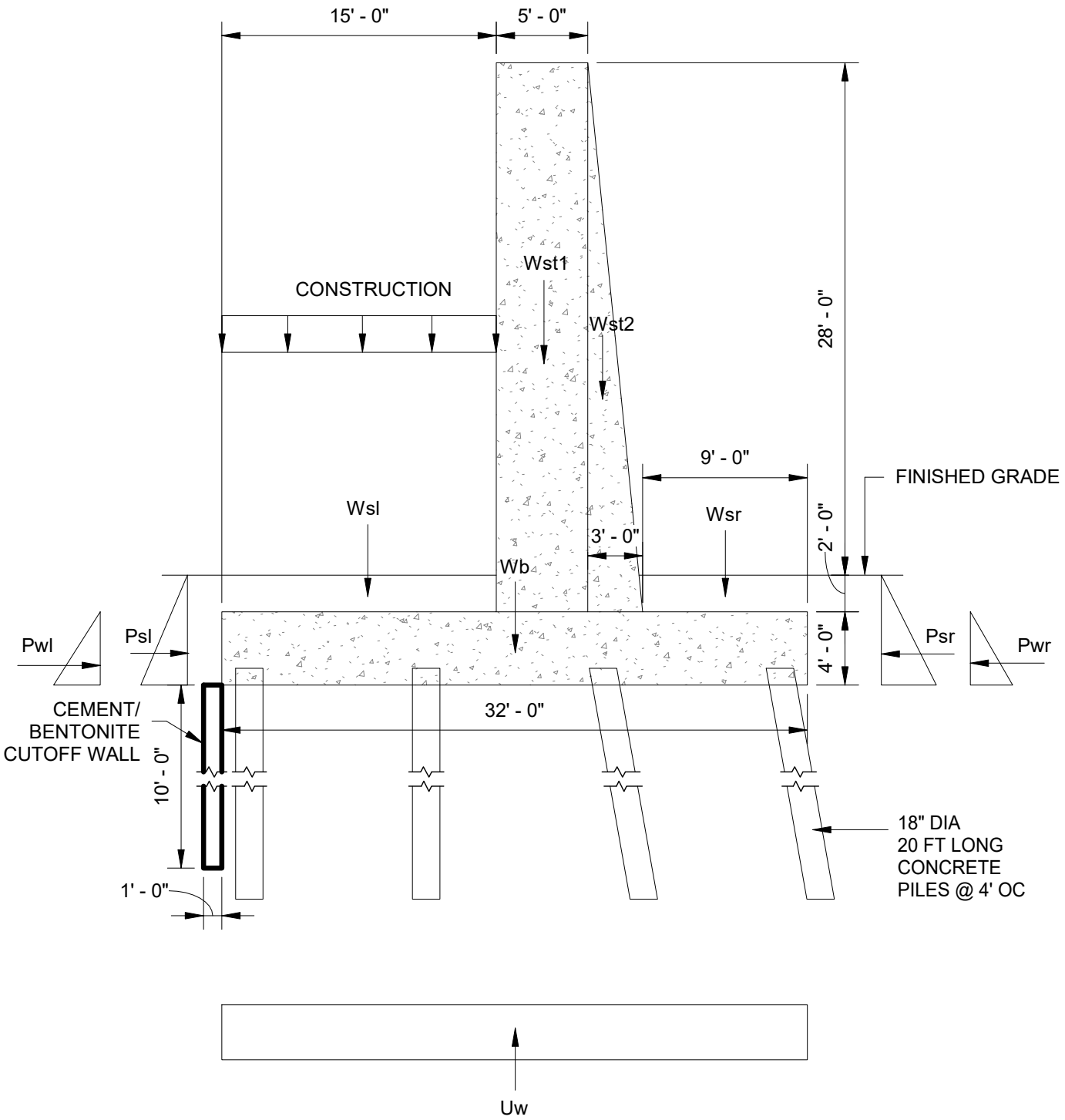

US ARMY CORPS OF ENGINEERS **MIAMI-DADE BACK BAY STORM RISK MANAGEMENT STUDY**	DESIGNED BY: Designer	ISSUE DATE: JAN 2020	CONTRACT NO.:
	DRAWN BY: Author	SOLICITATION NO.:	FILE NUMBER:
LOAD CASE C4 CONSTRUCTION 30FT WALL	CHECKED BY: Checker	**US Army Corps of Engineers ®**	
	SUBMITTED BY:		

CASE C4: CONSTRUCTION (PER EM 1110-2-2502)

SOIL PROPERTIES			WALL SECTION GEOMETRY		
γ_s =	120.00	PCF	Height of stem =	30	ft
Ø=	20.00		Height of base =	4	ft
c =	100.00	PSF	Width of Flood Side =	15	ft
K_o =	0.5		Width of Protected Side =	9	ft
WATER PROPERTIES			Width - Top of Stem =	5	ft
γ_W =	64.00	PCF	Width - Bottom of Stem =	8	ft
FACTOR OF SAFETY			Height of Soil =	2	ft
F.S. =	1.50		Width out of page	4	ft
CONCRETE PROPERTIES			Dist Between Piles	9.67	ft
γ_C =	150	PCF	Height of Flood Water	34	ft
UPLIFT PRESSURE			Height of Protected Water	6	ft
p1 =	610	psf	Number of Battered Piles In a Row	2	
p2 =	605	psf	Number of NonBatter Piles In a Row	2	
			Number of Piles In a Row	4	
			Number of Pile Rows	1	

FORCES			MOMENTS ABOUT PROTECTED SIDE TOE				
				Arm	Overturning	Resisting	
P_{wl} =	4.61	KIPS	From P_{wr}	11.33	52.22		
P_{sl} =	4.32	KIPS	From Psl	2	8.64		
P_{sr} =	4.32	KIPS	From Psr	2		8.64	
P_{wr}=	2.05	KIPS	From Pwl	6		12.29	
Rh=	2.56	KIPS		Mh	60.86	20.93	-39.94
W_w =	0.00	KIPS	From Ww	24.5		0.00	
W_{sl} =	14.40	KIPS	From Wsl	24.5		352.80	
W_b =	76.80	KIPS	From Wb	16		1228.80	
W_{st1} =	90.00	KIPS	From Wst1	14.5		1305.00	
W_{st2} =	27.00	KIPS	From Wst2	11		297.00	
W_{sr} =	8.64	KIPS	From Wsr	4.5		38.88	
Uw1 =	0.32	KIPS	From U_{w1}	21.33	6.83		
U_{w2} =	77.44	KIPS	From U_{w2}	16	1239.04		
Con	6	KIPS	From Con	24.5		147	
Rv=	139.40	KIPS		Mv	1245.87	3369.48	2123.61
Vr	139.4	KIPS		Mr	1306.73	3390.41	2083.68
eh	-15.6						
ev	15.23396			F.S. =	53.18	OK	

PILE LOADS

# PILES	4
Iy	467.22
Batter X	1
Batter Y	6
Batter	0.17

VERTICAL LOAD DISTRIBUTION

PILE	V/n [K]	Cx [FT]	(Vex/Iy) [K/FT]	(Vex/Iy)Cx [K/FT]	Pv [K]
4	34.85	14.50	-0.23	-3.31	31.54
3	34.85	4.83	-0.23	-1.10	33.75
2	34.85	-4.83	-0.23	1.10	35.95
1	34.85	-14.50	-0.23	3.31	38.16

HORIZONTAL LOAD DISTRIBUTION (ALL PILES)

PILE	Batter	Ph [K]	Net Ph [K]	Pv' [K]	Pv	Pa [K]	Pa [TONS]
4	0.00	0.00	-2.45	0.00	31.54	31.63	15.82
3	0.00	0.00	-2.45	0.00	33.75	33.83	16.92
2	0.17	5.99	-8.44	-50.64	-14.69	16.94	8.47
1	0.17	6.36	-8.81	-52.85	-14.69	17.13	8.56

NET Rh	-9.79
NET Rh/PILE	-2.45

HORIZONTAL LOAD DISTRIBUTION (BATTER PILES)

PILE	Batter	Ph [K]	Net Ph [K]	Pv' [K]	Pv	Pa [K]	Pa [TONS]
4	0.00	0.00	-4.90	0.00	31.54	31.91	15.96
3	0.00	0.00	-4.90	0.00	33.75	34.10	17.05
2	0.17	5.99	-10.89	-65.33	-29.38	31.33	15.67
1	0.17	6.36	-11.26	-67.54	-29.38	31.46	15.73

NET Rh	-9.79
NET Rh/PILE	-4.90

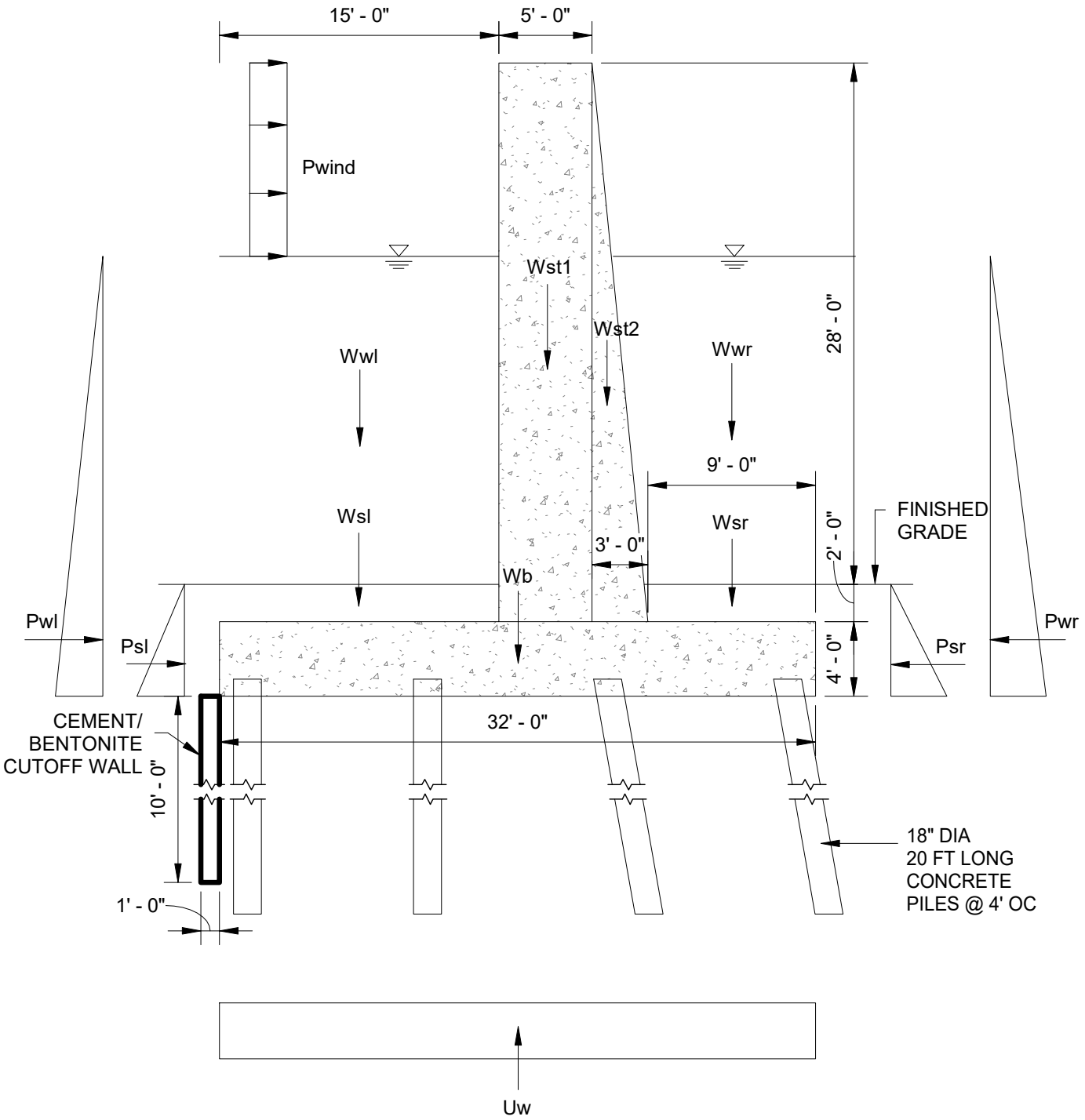

US ARMY CORPS OF ENGINEERS **MIAMI-DADE BACK BAY STORM RISK MANAGEMENT STUDY**	DESIGNED BY: Designer	ISSUE DATE: JAN 2020	CONTRACT NO.:
	DRAWN BY: Author	SOLICITATION NO.:	FILE NUMBER:
LOAD CASE C5 WIND 30FT WALL	CHECKED BY: Checker	**US Army Corps of Engineers ®**	
	SUBMITTED BY:		

Wind Analysis ASCE 7-10 Ch. 26

V = 180 mph (Risk Category III)

$q = 0.00256\, k_z\, k_{zt}\, k_d\, V^2$

$k_z = 1.12$ Table 27.3-1, Exp D
$k_{zt} = 1.0$
$k_d = 0.85$ Table 26.6-1

$q = 0.00256\,(1.12)(1.0)(0.85)(180)^2 = 79.0$ PSF

$P = q_h\, G\, C_f$ 29.4-1

$G = 0.85$ (26.9.1)
$C_f = 1.3$ (29.4-1) $s/h = 1$, Aspect Ratio ≥ 45 very Long compared to Height

$P = (79.0)(0.85)(1.3)$

$= 87.3$ PSF

CASE C5: WIND (PER EM 1110-2-2502)

SOIL PROPERTIES

γ_s =	120.00	PCF
Ø=	20.00	
c =	100.00	PSF
K_o =	0.5	

WATER PROPERTIES

γ_W =	64.00	PCF

FACTOR OF SAFETY

F.S. =	1.50

CONCRETE PROPERTIES

γ_C =	150	PCF
Pwind	87.3	PSF

UPLIFT PRESSURE

p1 =	610	psf
p2 =	605	psf

WALL SECTION GEOMETRY

Height of stem =	30	ft
Height of base =	4	ft
Width of Flood Side =	15	ft
Width of Protected Side =	9	ft
Width - Top of Stem =	5	ft
Width - Bottom of Stem =	8	ft
Height of Soil =	2	ft
Width out of page	4	ft
Dist Between Piles	9.67	ft
Height of Flood Water	34	ft
Height of Protected Water	6	ft
Number of Battered Piles In a Row	2	
Number of NonBatter Piles In a Row	2	
Number of Piles In a Row	4	
Number of Pile Rows	1	

FORCES

P_{wl} =	64.23	KIPS
P_{sl} =	4.32	KIPS
P_{sr} =	4.32	KIPS
P_{wr}=	64.23	KIPS
Wind	4.051	KIPS
Rh=	4.05	KIPS
W_{wl} =	62.98	KIPS
Wwr =	44.08	
W_{sl} =	14.40	KIPS
W_b =	76.80	KIPS
W_{st1} =	90.00	KIPS
W_{st2} =	27.00	KIPS
W_{sr} =	8.64	KIPS
U_{w1} =	0.32	KIPS
U_{w2} =	77.44	KIPS
Rv=	202.38	KIPS
Vr	202.42	KIPS
eh	-28.2	
ev	18.37	

MOMENTS ABOUT PROTECTED SIDE TOE

	Arm	Overturning	Resisting	
From P_{wl}	7.47	479.55		
From Psl	2	8.64		
From Psr	2		8.64	
From Pwr	7.47		479.55	
From Wind	28.2	114.2303		
Mh		602.42	488.19	-114.23
From Wwl	24.5		1542.91	
From Wwr	4.5		198.37	
From Wsl	24.5		352.80	
From Wb	16		1228.80	
From Wst1	14.5		1305.00	
From Wst2	11		297.00	
From Wsr	4.5		38.88	
From U_{w1}	21.33	6.83		
From U_{w2}	16.00	1239.04		
Mv		1245.87	4963.77	3717.90
Mr		1848.29	5451.96	3603.67

F.S. = 32.55 OK

PILE LOADS

# PILES	4
Iy	467.22
Batter X	1
Batter Y	6
Batter	0.17

VERTICAL LOAD DISTRIBUTION

PILE	V/n [K]	Cx [FT]	(Vex/Iy) [K/FT]	(Vex/Iy)Cx [K/FT]	Pv [K]
4	50.59	14.50	1.03	14.89	65.49
3	50.59	4.83	1.03	4.96	55.56
2	50.59	-4.83	1.03	-4.96	45.63
1	50.59	-14.50	1.03	-14.89	35.70

HORIZONTAL LOAD DISTRIBUTION (ALL PILES)

PILE	Batter	Ph [K]	Net Ph [K]	Pv' [K]	Pv	Pa [K]	Pa [TONS]
4	0.00	0.00	-2.38	0.00	65.49	65.53	32.77
3	0.00	0.00	-2.38	0.00	55.56	55.61	27.80
2	0.17	7.60	-9.98	-59.89	-14.26	17.40	8.70
1	0.17	5.95	-8.33	-49.96	-14.26	16.51	8.25

NET Rh	-9.50
NET Rh/PILE	-2.38

HORIZONTAL LOAD DISTRIBUTION (BATTER PILES)

PILE	Batter	Ph [K]	Net Ph [K]	Pv' [K]	Pv	Pa [K]	Pa [TONS]
4	0.00	0.00	-4.75	0.00	65.49	65.66	32.83
3	0.00	0.00	-4.75	0.00	55.56	55.76	27.88
2	0.17	7.60	-12.36	-74.14	-28.51	31.08	15.54
1	0.17	5.95	-10.70	-64.21	-28.51	30.46	15.23

NET Rh	-9.50
NET Rh/PILE	-4.75

CHAPTER 3 GATE ANALYSIS

3.1 SURGE BARRIER GATES

No preliminary structural analysis was performed for these features.

3.1.1 MITER GATES

Currently there are 3 Atlantic Intercoastal Waterway locks that use miter gate designs for the prevention of water with hydrostatic heads 5 to 15 feet. The width of these gates vary between 50 and 72 feet. Being that these gates are currently in use, their designs were utilized for guidance and preliminary structural layout. A pile foundation shall be used for these structures and pile arrangements similar to the existing designs are used for planning purposes. Actual forces and overturning analysis have not been conducted but existing design ensures that the layouts used can be developed with minor alterations as the project progresses.

3.1.2 SECTOR GATES

For the sector gate in the Miami River alignment, the New Bedford / Fair Haven (NBFH) Barrier was used as the "go by" structure for planning purposes. The requirements for the Miami River sector gate are very similar to the NBFH barrier with similar width, hydrostatic head requirements and geometry. The design utilizes a pile supported foundation and a pile arrangement to meet anticipated forces. The pile arrangement is based upon similar structures of size and weight. Actual forces and overturning analysis have not been conducted but existing design ensure that the layouts used can be developed with minor alterations as the project progresses.

3.2 STREET CLOSURES

No preliminary structural analysis was performed for these features. Currently there are four working street closures along the existing Norfolk, VA floodwall that are used as "go bys" for estimating and planning purposes. Sketches of these files are included as part of this sub appendix.

3.3 FLOODWALL IN WATER (MIAMI RIVER)

The tidal wall design is to be used in areas where the wall is subjected to increased wave and overtopping forces. These areas are located at the mouth of the Miami River. Preliminary hydrological analysis showed greater wave forces and a deeper channel depth in this area. This called for a need to design a maximum 28 foot (above grade) T-wall section. This design can withstand soil and hydrostatic head differentials of 20 feet or more and calculated maximum wave forces. There is an existing bulkhead wall that is protecting the coastline. The new tidal wall design shall not interfere with any existing structures. The structural design, deep foundations, construction and geometry are well suited for the application as a storm surge wall in the riverine environment of this project. The design ensures that the layouts used can be developed with minor alterations as the project progresses.

10% DESIGNS MITER GATES, SECTOR GATES, & FLOODWALLS

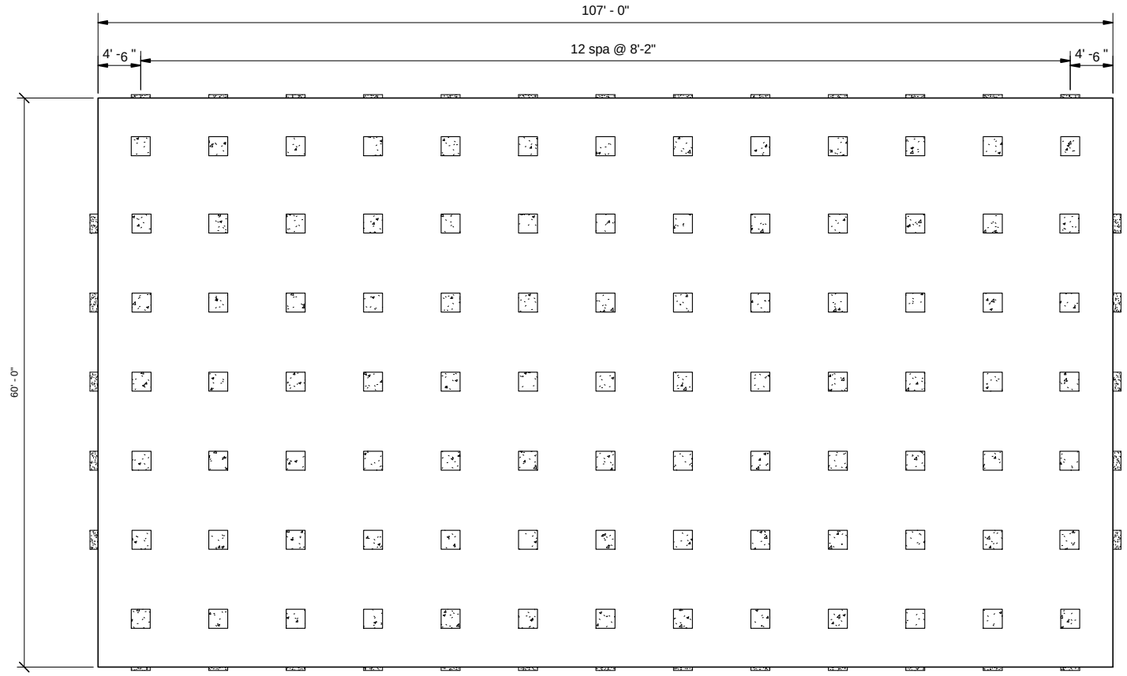

1 SINGLE TIDE GATE FOUNDATION PLAN

1/8" = 1'-0"

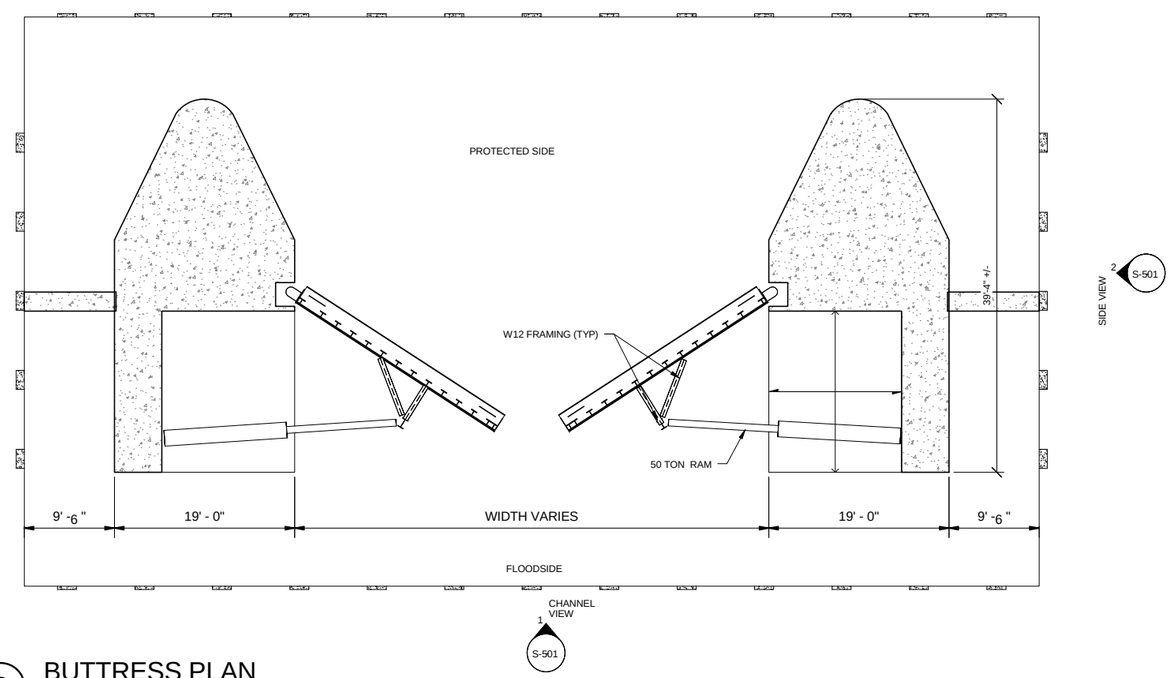

2 BUTTRESS PLAN

1/8" = 1'-0"

US Army Corps of Engineers ®
Norfolk District

MARK	DESCRIPTION	DATE	APPR

ISSUE DATE: DD-MMM-YYYY
PROJECT NO. PN00000
CONTRACT NO. Contract No.
NAO FILE NUMBER:

DESIGN BY: Designer
DRAWN BY: Author
SBMT BY: Approver
CKD BY: Checker
PLOT DATE:
PLOT SCALE: AS SHOWN
SIZE: 22" X 34"
FILE NAME:

US ARMY CORPS OF ENGINEERS
NORFOLK DISTRICT
Norfolk, VA

10% DESIGN SUBMITTAL

MIAMI-DADE BACK BAY COASTAL STORM RISK MANAGEMENT (CSRM) STUDY

FOUNDATION PLAN
MITER TIDE GATE

SHEET IDENTIFICATION
S-101
SHEET 0 OF 0

S-101-

ALL ELEVATIONS ARE NAVD 88

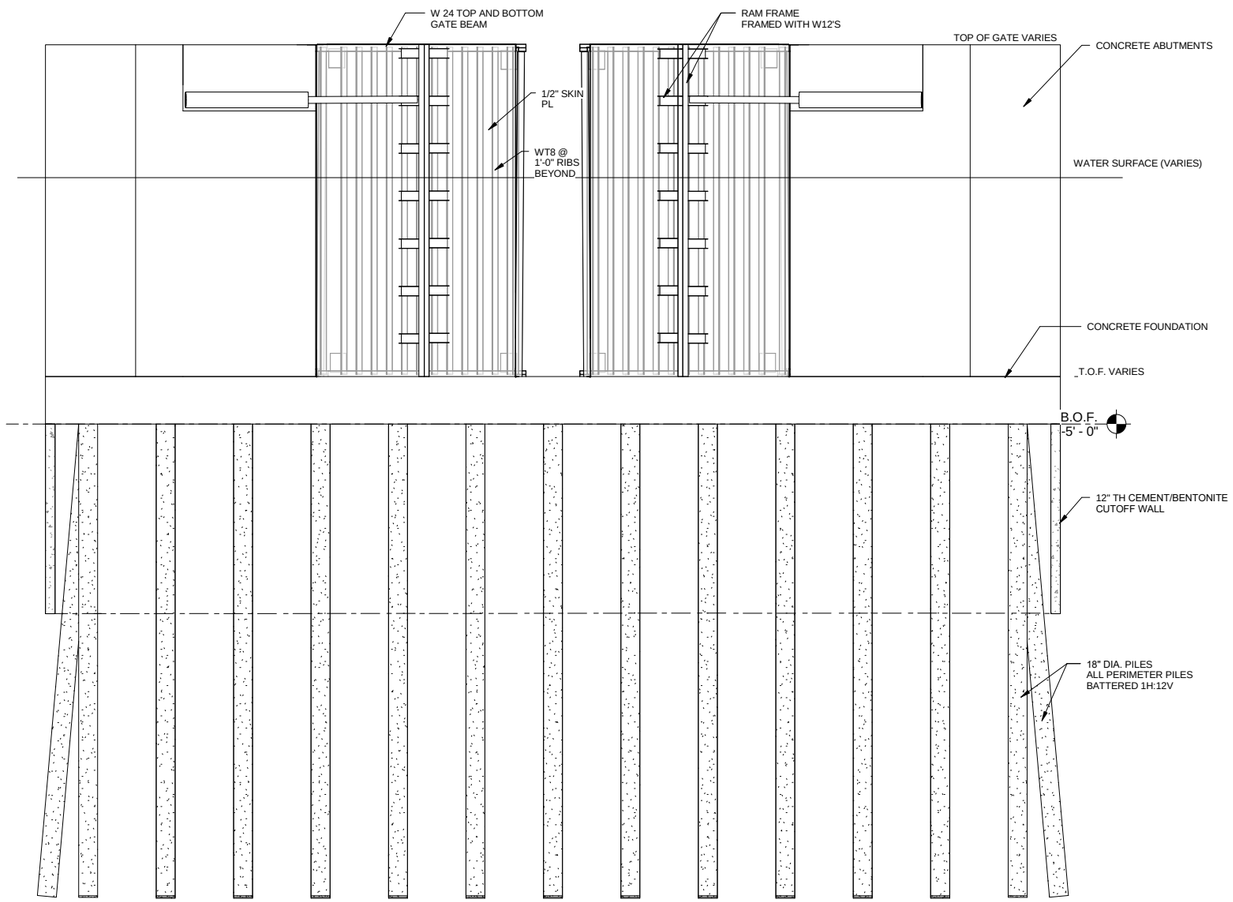

1 CHANNEL VIEW

1/8" = 1'-0"

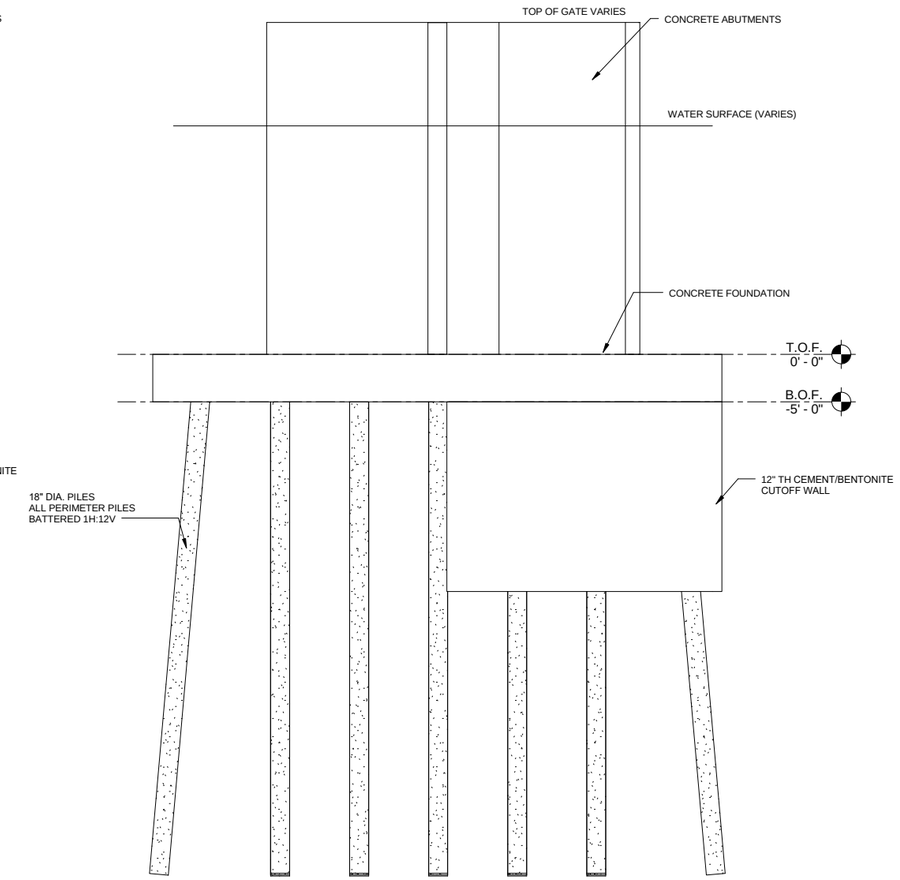

2 SIDE VIEW

1/8" = 1'-0"

US Army Corps of Engineers ®
Norfolk District

MARK	DESCRIPTION	DATE	APPR

ISSUE DATE: DD-MMM-YYYY
PROJECT NO. P#00000
CONTRACT NO. Contract No.
NAO FILE NUMBER:

DESIGN BY: Designer
DRAWN BY: Author
SBMT BY: Approver
CKD BY: Checker
PLOT DATE:
PLOT SCALE: ASIS+0VIN
SIZE: 22" X 34"
FILE NAME:

US ARMY CORPS OF ENGINEERS
NORFOLK DISTRICT
Norfolk, VA

10% DESIGN SUBMITTAL

MIAMI-DADE BACK BAY COASTAL STORM RISK MANAGEMENT (CSRM) STUDY

MITER TIDE GATE ELEVATIONS

SHEET IDENTIFICATION
S-501
SHEET 0 OF 0

S-501-

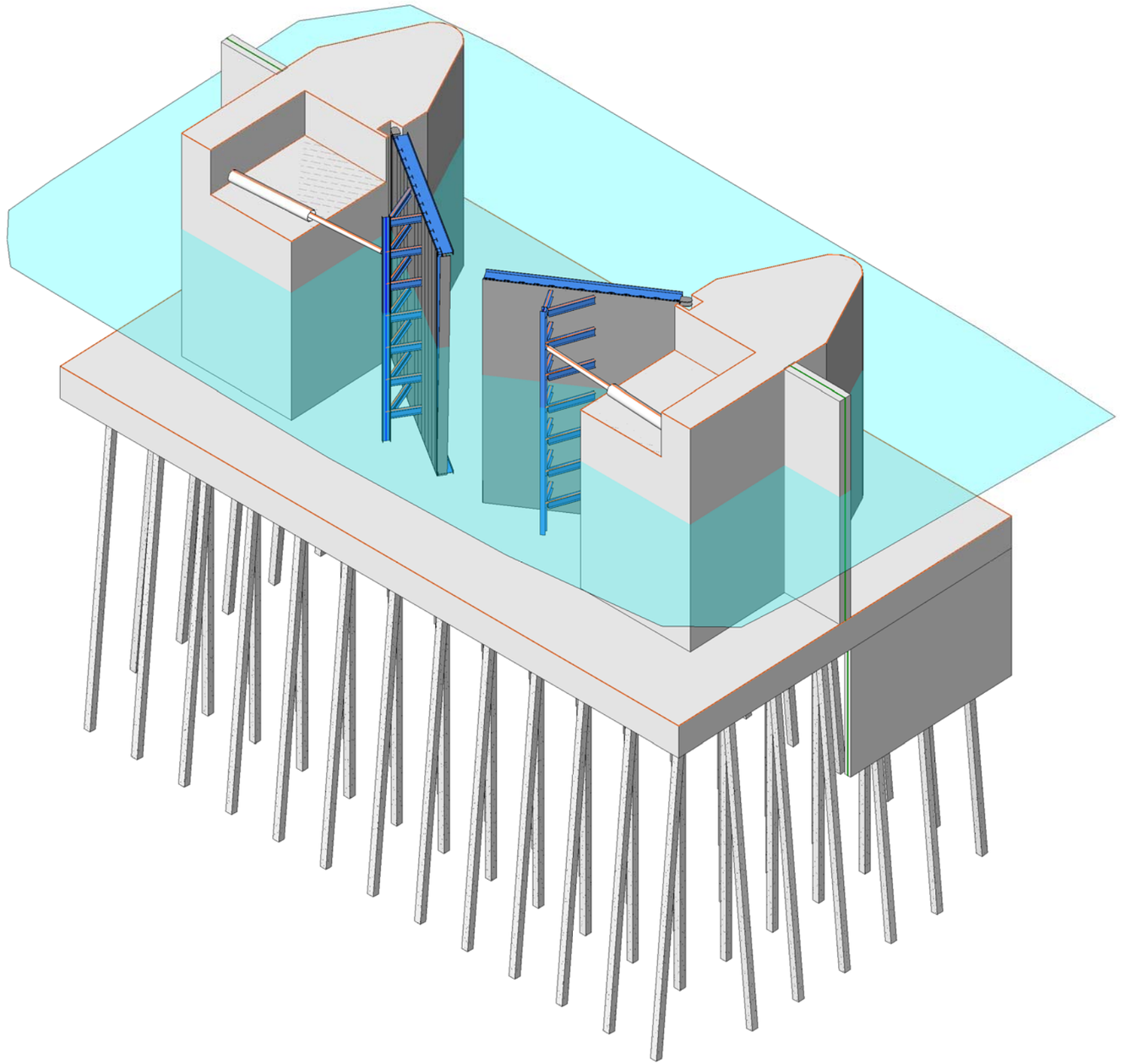

1 BIRD'S EYE VIEW MITER TIDE GATE

US Army Corps of Engineers ®
Norfolk District

MARK	DESCRIPTION	DATE	APPD

US ARMY CORPS OF ENGINEERS
NORFOLK DISTRICT
Norfolk, VA

10% DESIGN SUBMITTAL

DESIGN BY: Designer
DRAWN BY: Author
SBMT BY: Approver
SIZE: 22" X 34"
CKD BY: Checker
PLOT DATE:
PLOT SCALE: AS SHOWN
ISSUE DATE: DD-MMM-YYYY
PROJECT NO. PN00000
CONTRACT NO. Contract No.
NAD FILE NUMBER:
FILE NAME:

MIAMI-DADE BACK BAY COASTAL STORM RISK MANAGEMENT (CSRM) STUDY

BIRD'S EYE

SHEET IDENTIFICATION
S-601
SHEET OF 0

S-601-

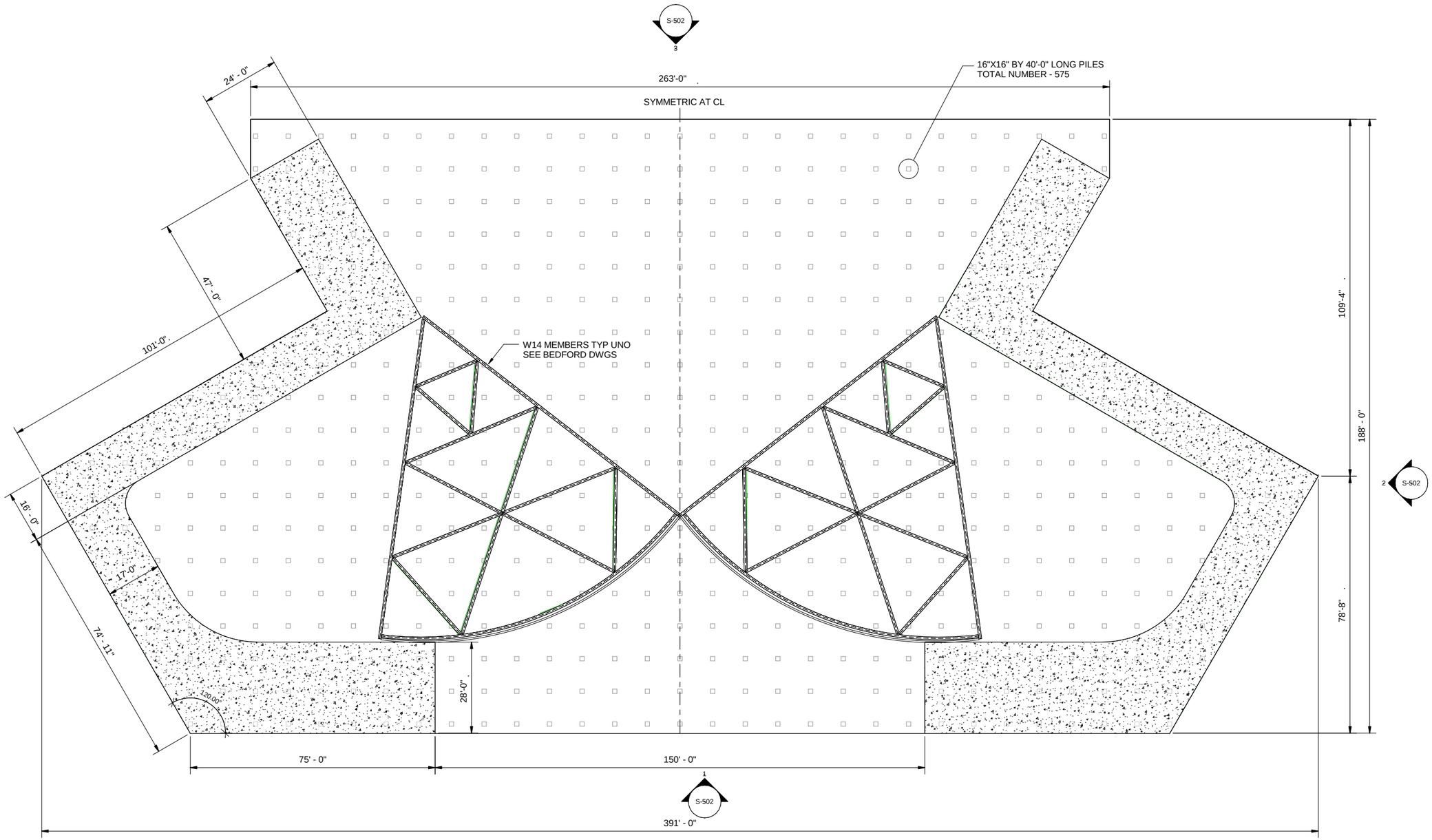

US Army Corps of Engineers ®

MARK	DESCRIPTION	DATE

DESIGNED BY: Designer
DRAWN BY: Drafter
CHECKED BY: Checker
SUBMITTED BY:
SIZE: ANSI D

ISSUE DATE: SUBMITTAL
PROJECT NO.: -
CONTRACT NO.: -
FILE NUMBER:
DATE & TIME STAMP:

US ARMY CORPS OF ENGINEERS
NORFOLK DISTRICT
NORFOLK, VA

10% DESIGN SUBMITTAL

MIAMI-DADE BACK BAY COASTAL STORM RISK MANAGEMENT (CSRM) STUDY

SECTOR GATE FOUNDATION PLAN

SHEET ID

S-102

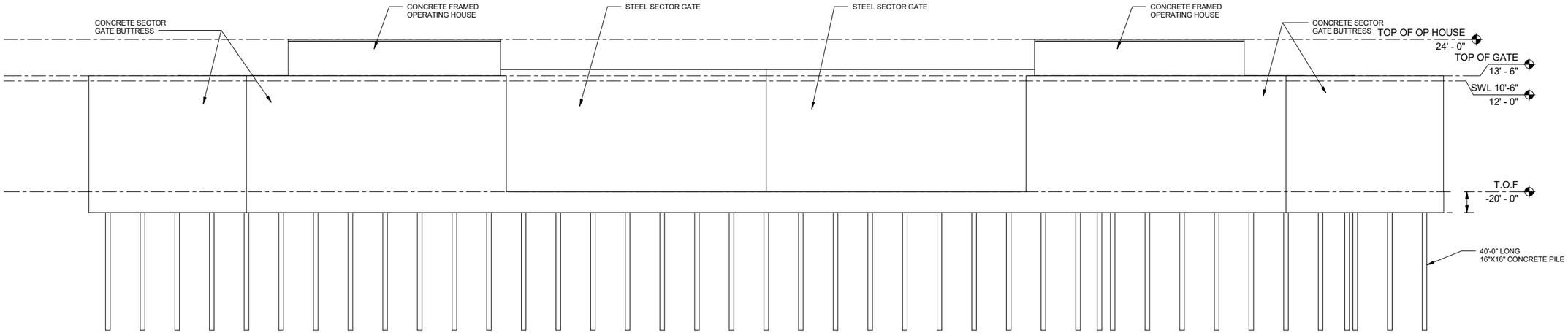

SOUTH FRAMING ELEVATION

SCALE: 1/16" = 1'-0"

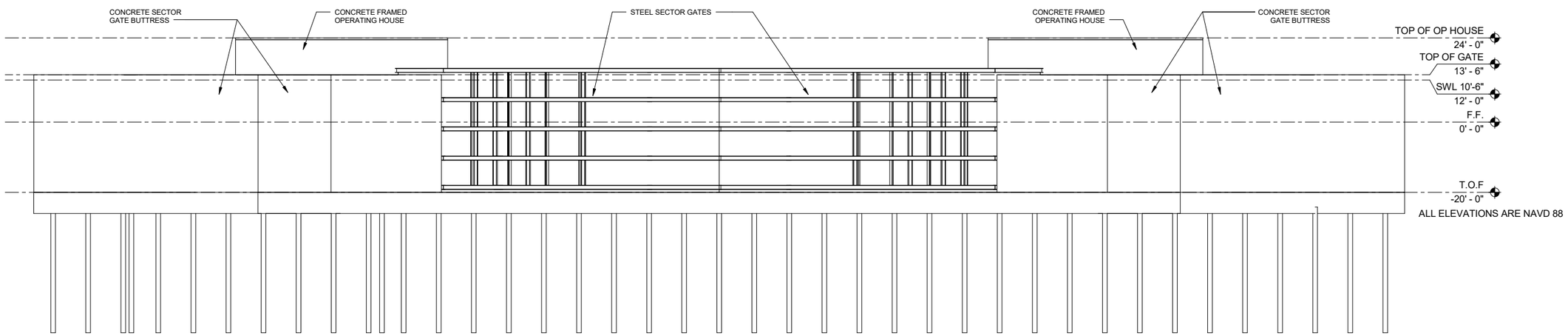

NORTH FRAMING ELEVATION

SCALE: 1/16" = 1'-0"

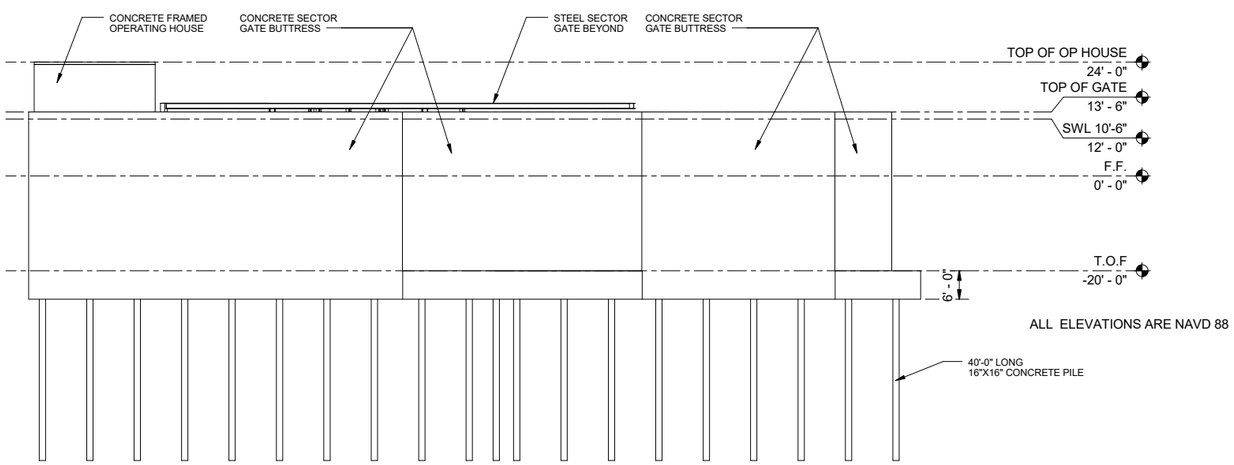

EAST FRAMING ELEVATION

SCALE: 1/16" = 1'-0"

US Army Corps of Engineers ®

MARK	DESCRIPTION	DATE

ISSUE DATE:
SUBMITTAL:
PROJECT NO.: -
CONTRACT NO.: -
FILE NUMBER:
DATE & TIME STAMP:

DESIGNED BY: Designer
DRAWN BY: Author
CHECKED BY: Checker
SUBMITTED BY:
SIZE: ANSI D

US ARMY CORPS OF ENGINEERS
NORFOLK DISTRICT
NORFOLK, VA

10% DESIGN SUBMITTAL

MIAMI-DADE BACK BAY COASTAL STORM RISK MANAGEMENT (CSRM) STUDY

TYPICAL STRUCTURAL ELEVATIONS

SHEET ID

S-502

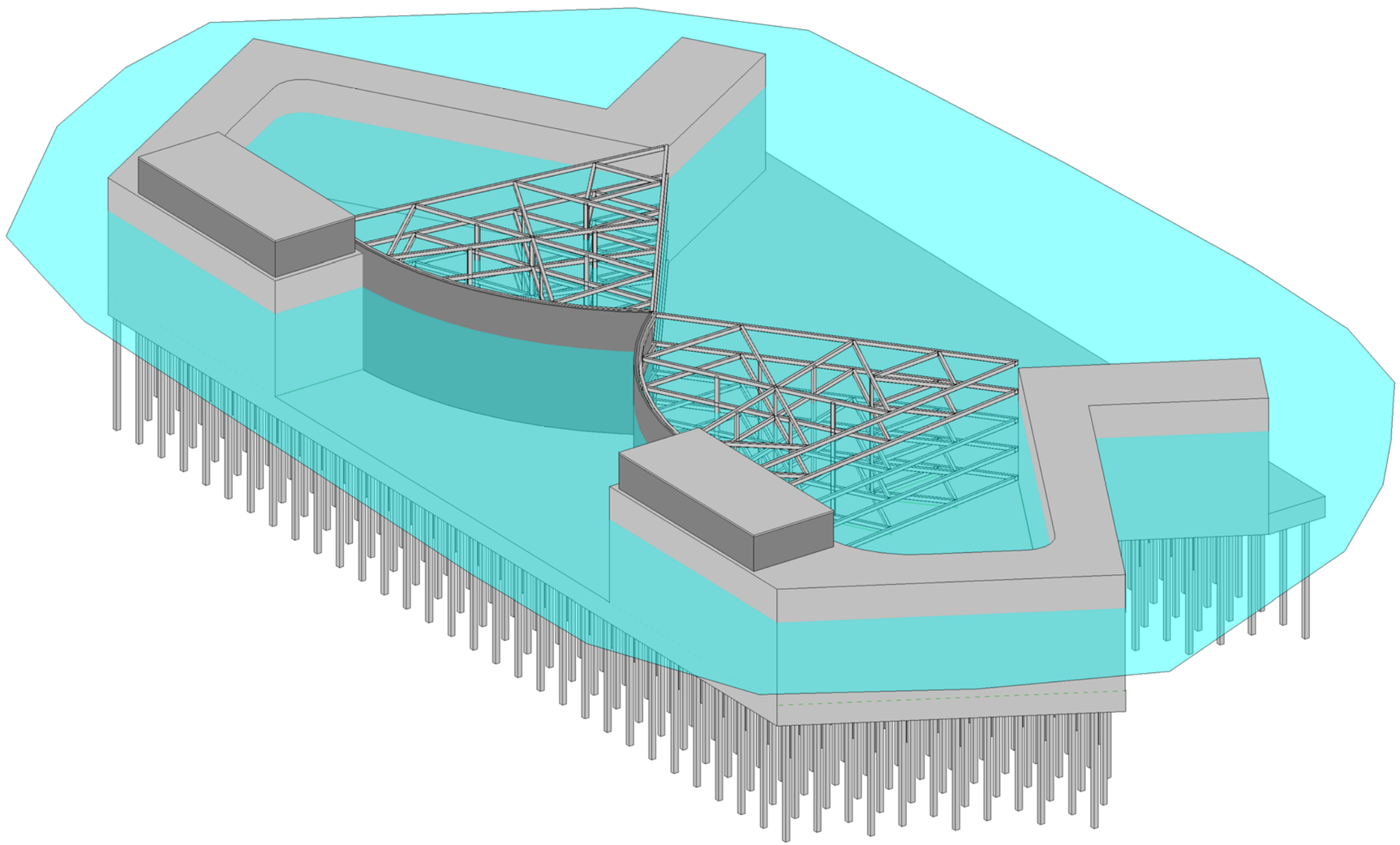

BIRD'S EYE VIEW

SCALE:

US Army Corps of Engineers ®

MARK	DESCRIPTION	DATE

DESIGNED BY: Designer
DRAWN BY: Author
CHECKED BY: Checker
SUBMITTED BY:
SIZE: ANSI D

ISSUE DATE: SUBMITTAL
PROJECT NO.: -
CONTRACT NO.: -
FILE NUMBER:
DATE & TIME STAMP:

US ARMY CORPS OF ENGINEERS
NORFOLK DISTRICT
NORFOLK, VA

10% DESIGN SUBMITTAL

MIAMI-DADE BACK BAY COASTAL STORM RISK MANAGEMENT (CSRM) STUDY

BIRD'S EYE VIEW

SHEET ID

S-602

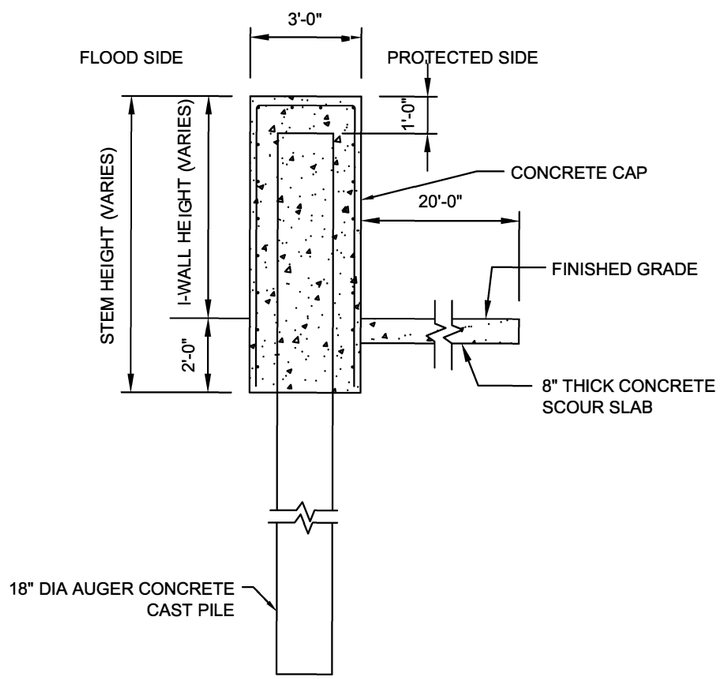

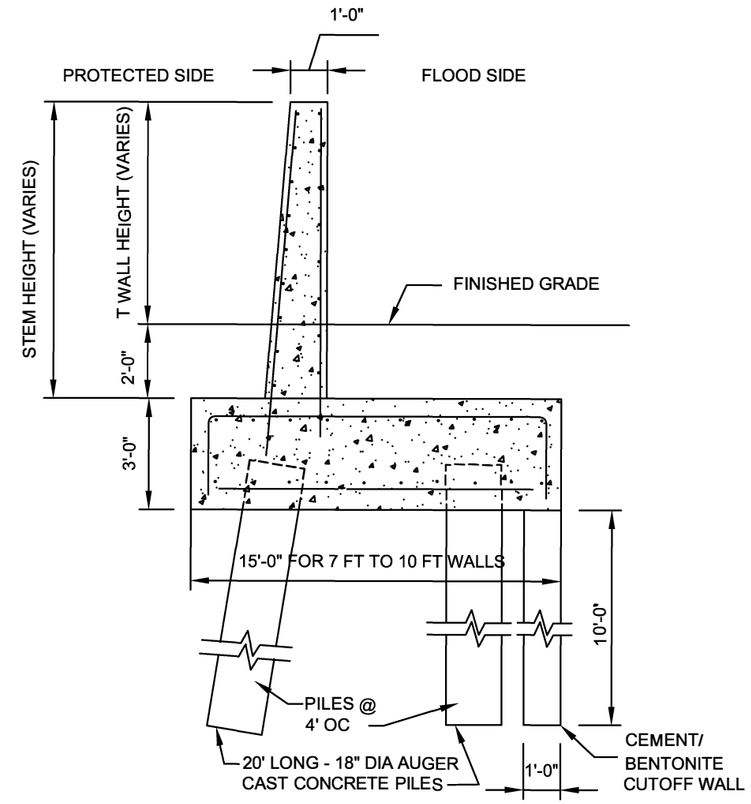

I - WALL QUANTITIES (ESTIMATED)			
I-WALL HEIGHT	STEM HEIGHT	CONCRETE VOL [CY/FT]	LENGTH OF PILE [FT]
3 FT	5 FT	0.6	20
4 FT	6 FT	0.7	20
5 FT	7 FT	0.8	20
6 FT	8 FT	0.9	20

T - WALL QUANTITIES (ESTIMATED)				
T-WALL HEIGHT	STEM HEIGHT	CONCRETE VOL STEM CY/FT	CONCRETE VOL BASE CY/FT	VOL OF CUTOFF WALL CY/FT
7 FT	9 FT	0.50	1.67	0.56
8 FT	10 FT	0.56	1.67	0.56
9 FT	11 FT	0.61	1.67	0.56
10 FT	12 FT	0.67	1.67	0.56

NOTES:

1. ALL CONCRETE SHALL HAVE A 28 DAY STRENGTH OF 4000 PSI.
2. ALL REINFORCEMENT SHALL HAVE AN Fy = 60 KSI
3. CEMENT/BENTONITE CUTOFF WALL SHALL BE BY EXCAVATION AND PUMPING.
4. "I-WALL HEIGHT" AND "T-WALL HEIGHT" REFER TO THE EXPOSED HEIGHT OF THE WALL ABOVE GROUND

US Army Corps of Engineers
Norfolk District

MARK	DATE	DESCRIPTION	BY	APP

DESIGNED XXX | CHECKED XXX | DATE XX-XXX-13
DRAWN XXX | SUBMITTED XXX | ECAD ASSH OWN
PROJECT NO. XXXXXXX | REPRODUCIBILITY XXX
FILE NO. XXXXXXX | CONTRACT NO. (IF ASSIGNED) YR-X-XXXX
Last saved on | Plot scale 1
File name

US ARMY CORPS OF ENGINEERS
NORFOLK DISTRICT
NORFOLK, VIRGINIA

10% DESIGN SUBMITTAL

MIAMI-DADE COUNTY COASTAL STORM RISK MANAGEMENT (CSRM) STUDY

PRELIMINARY I - WALL AND T - WALL STRUCTUTRAL SECTIONS

SHEET REFERENCE NUMBER
S-503A
SHEET XXX OF XXX

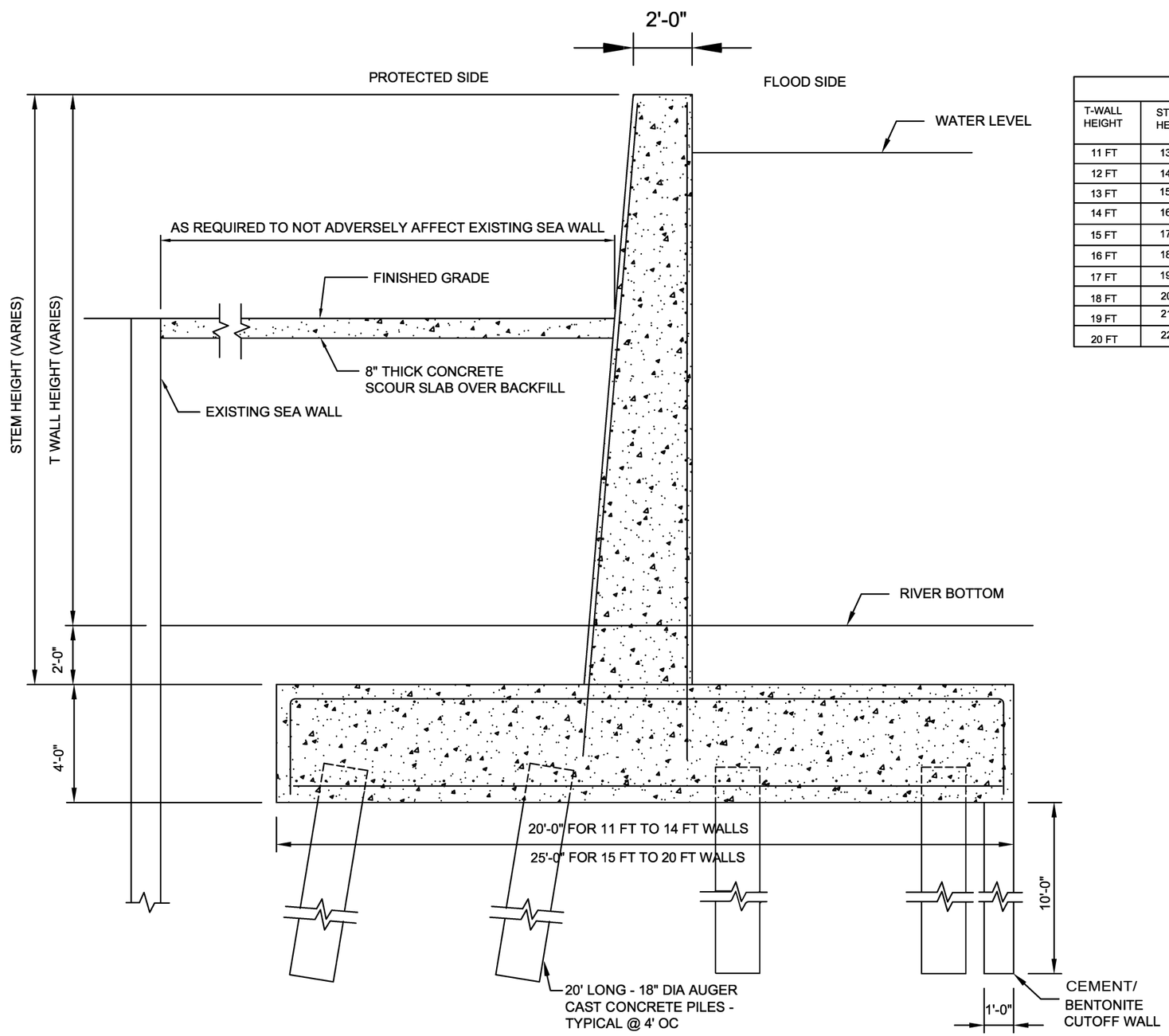

T - WALL QUANTITIES (ESTIMATED)				
T-WALL HEIGHT	STEM HEIGHT	CONCRETE VOL STEM CY/FT	CONCRETE VOL BASE CY/FT	VOL OF CUTOFF WALL CY/FT
11 FT	13 FT	1.44	2.96	0.37
12 FT	14 FT	1.56	2.96	0.37
13 FT	15 FT	1.67	2.96	0.37
14 FT	16 FT	1.78	2.96	0.37
15 FT	17 FT	1.89	3.70	0.37
16 FT	18 FT	2.00	3.70	0.37
17 FT	19 FT	2.11	3.70	0.37
18 FT	20 FT	2.22	3.70	0.37
19 FT	21 FT	2.33	3.70	0.37
20 FT	22 FT	2.44	3.70	0.37

NOTES:

1. ALL CONCRETE SHALL HAVE A 28 DAY STRENGTH OF 4000 PSI.
2. ALL REINFORCEMENT SHALL HAVE AN Fy = 60 KSI
3. CEMENT/BENTONITE CUTOFF WALL SHALL BE BY EXCAVATION AND PUMPING.
4. "I-WALL HEIGHT" AND "T-WALL HEIGHT" REFER TO THE EXPOSED HEIGHT OF THE WALL ABOVE GROUND

US Army Corps of Engineers
Norfolk District

MARK	DATE	DESCRIPTION	BY	APP

US ARMY CORPS OF ENGINEERS
NORFOLK DISTRICT
NORFOLK, VIRGINIA

DESIGNED: XXX
DRAWN: XXX
CHECKED: XXX
SUBMITTED: XXX
DATE: XX-XXX-13
SCALE: AS SHOWN
PROJECT NO. XXXXXXX
PROJECT ENGINEER: XXX
FILE: XXXXXX
CONTRACT NO. YR-X-XXXX
Last revised on:
File name:
Plot scale: 1:1

10% DESIGN SUBMITTAL

MIAMI-DADE COUNTY COASTAL STORM RISK MANAGEMENT (CSRM) STUDY

PRELIMINARY I - WALL AND T - WALL STRUCTUTRAL SECTIONS

SHEET REFERENCE NUMBER
S-503B
SHEET XXX OF XXX

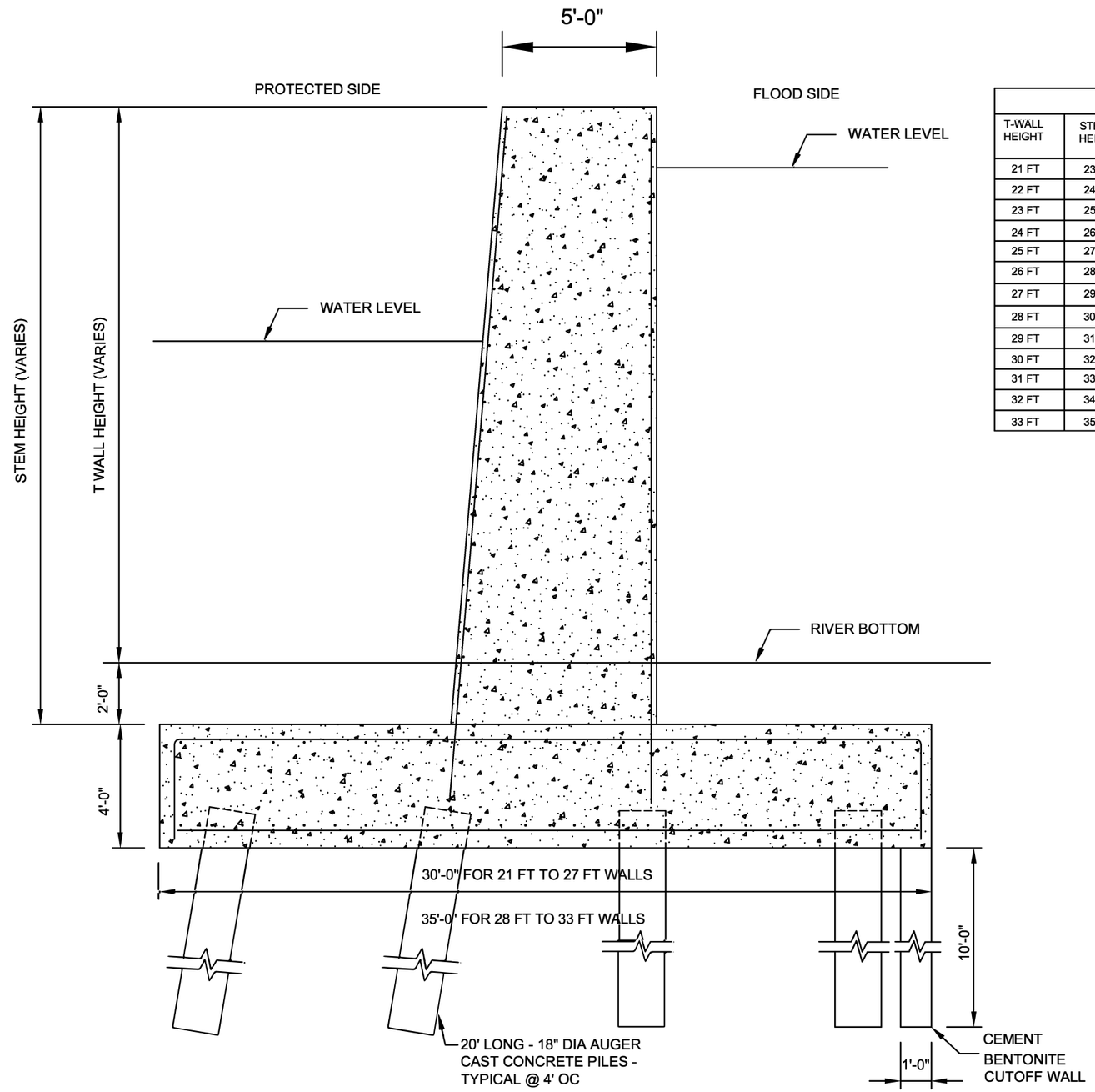

T - WALL QUANTITIES (ESTIMATED)				
T-WALL HEIGHT	STEM HEIGHT	CONCRETE VOL STEM CY/FT	CONCRETE VOL BASE CY/FT	VOL OF CUTOFF WALL CY/FT
21 FT	23 FT	5.54	4.44	0.37
22 FT	24 FT	5.78	4.44	0.37
23 FT	25 FT	6.02	4.44	0.37
24 FT	26 FT	6.26	4.44	0.37
25 FT	27 FT	6.50	4.44	0.37
26 FT	28 FT	6.74	4.44	0.37
27 FT	29 FT	6.98	4.44	0.37
28 FT	30 FT	7.22	5.19	0.37
29 FT	31 FT	7.46	5.19	0.37
30 FT	32 FT	7.70	5.19	0.37
31 FT	33 FT	7.94	5.19	0.37
32 FT	34 FT	8.19	5.19	0.37
33 FT	35 FT	8.43	5.19	0.37

NOTES:

1. ALL CONCRETE SHALL HAVE A 28 DAY STRENGTH OF 4000 PSI.
2. ALL REINFORCEMENT SHALL HAVE AN Fy = 60 KSI
3. CEMENT/BENTONITE CUTOFF WALL SHALL BE BY EXCAVATION AND PUMPING.
4. "I-WALL HEIGHT" AND "T-WALL HEIGHT" REFER TO THE EXPOSED HEIGHT OF THE WALL ABOVE GROUND

US Army Corps of Engineers
Norfolk District

MARK	DATE	DESCRIPTION	BY	APP

DESIGNED: XXX
DRAWN: XXX
CHECKED: XXX
SUBMITTED: XXX
DATE: XX-XXX-13
SCALE: AS SHOWN
PROJECT NO: XXXXXX
FILE NO: XXXXXX
NORFOLK FILE NO: XXX
CONTRACT/PROJ DWG NO: YR-X-XXXX
Plot scale: 1:1
Last verified on:
File name:

US ARMY CORPS OF ENGINEERS
NORFOLK DISTRICT
NORFOLK, VIRGINIA

10% DESIGN SUBMITTAL

MIAMI-DADE COUNTY COASTAL STORM RISK MANAGEMENT (CSRM) STUDY

PRELIMINARY I - WALL AND T - WALL STRUCTUTRAL SECTIONS

SHEET REFERENCE NUMBER
S-503C
SHEET XXX OF XXX

CHAPTER 4: APPENDIX DRAWINGS

SECTOR GATE
NEW BEDFORD - FAIR HAVEN, CONNECTICUT

THIS GATE HAS DIMENSIONS OF 152' IN WIDTH
AND 53' IN HEIGHT. THE MIAMI-DADE COUNTY CSRM GATE
SHALL BE 150' IN WIDTH AND 35' IN HEIGHT.
ADJUST COSTS ACCORDINGLY.

STANDARD STREET CLOSURE
NORFOLK FLOODWALL, NORFOLK, VA

DRAWINGS DEPICT STANDARD FEATURES OF
STREET CLOSURE GATES. SIZES REQUIRED
FOR COLLIER COUNTY CSRM VARY SEE TABLE BELOW.
ADJUST COST ACCORDINGLY.

US Army Corps of Engineers ®
Norfolk District

MARK	DESCRIPTION	DATE	APPD

ISSUE DATE: DD-MMM-YYY
DESIGN BY: Designer
DRAWN BY: Author
CKD BY: Checker
SBMT BY: Approver
PROJECT NO. PN00000
PLOT DATE:
CONTRACT NO. Contract No.
NAO FILE NUMBER:
PLOT SCALE: AS SHOWN
SIZE: 22" X 34"
FILE NAME:

US ARMY CORPS OF ENGINEERS
NORFOLK DISTRICT
NORFOLK, VA

10% DESIGN SUBMITTAL

MIAMI-DADE BACK BAY COASTAL STORM RISK MANAGEMENT (CSRM) STUDY

APPENDICES

SHEET IDENTIFICATION
S-REF1
SHEET XXX OF XXX

S-REF1-

NEW BEDFORD - FAIR HAVEN SECTOR GATE

US Army Corps of Engineers
Norfolk District

NO.	DESCRIPTION	DATE	APPRD.

DESIGNED XXX | CHECKED XXX | SIZE XX-XXX-13
DRAWN XXX | SUBMITTED XXX | SCALE AS SHOWN
PROJECT NO. XXXXXX | SUPERCEDES FILE NO. XXX
FILE NO. XXXXXX | CONTRACTOR'S DRAWING NO. YR-X-XXXX
Last saved on:
File name:
Plot scale: 1:1

NORFOLK DISTRICT
CORPS OF ENGINEERS
NORFOLK, VIRGINIA

10% DESIGN SUBMITTAL

MIAMI-DADE BACK BAY COASTAL STORM RISK MANAGEMENT (CSRM) STUDY

NEW BEDFORD-FAIR HAVEN SECTOR GATE

SHEET REFERENCE NUMBER
S-REF2
SHEET XXX OF XXX

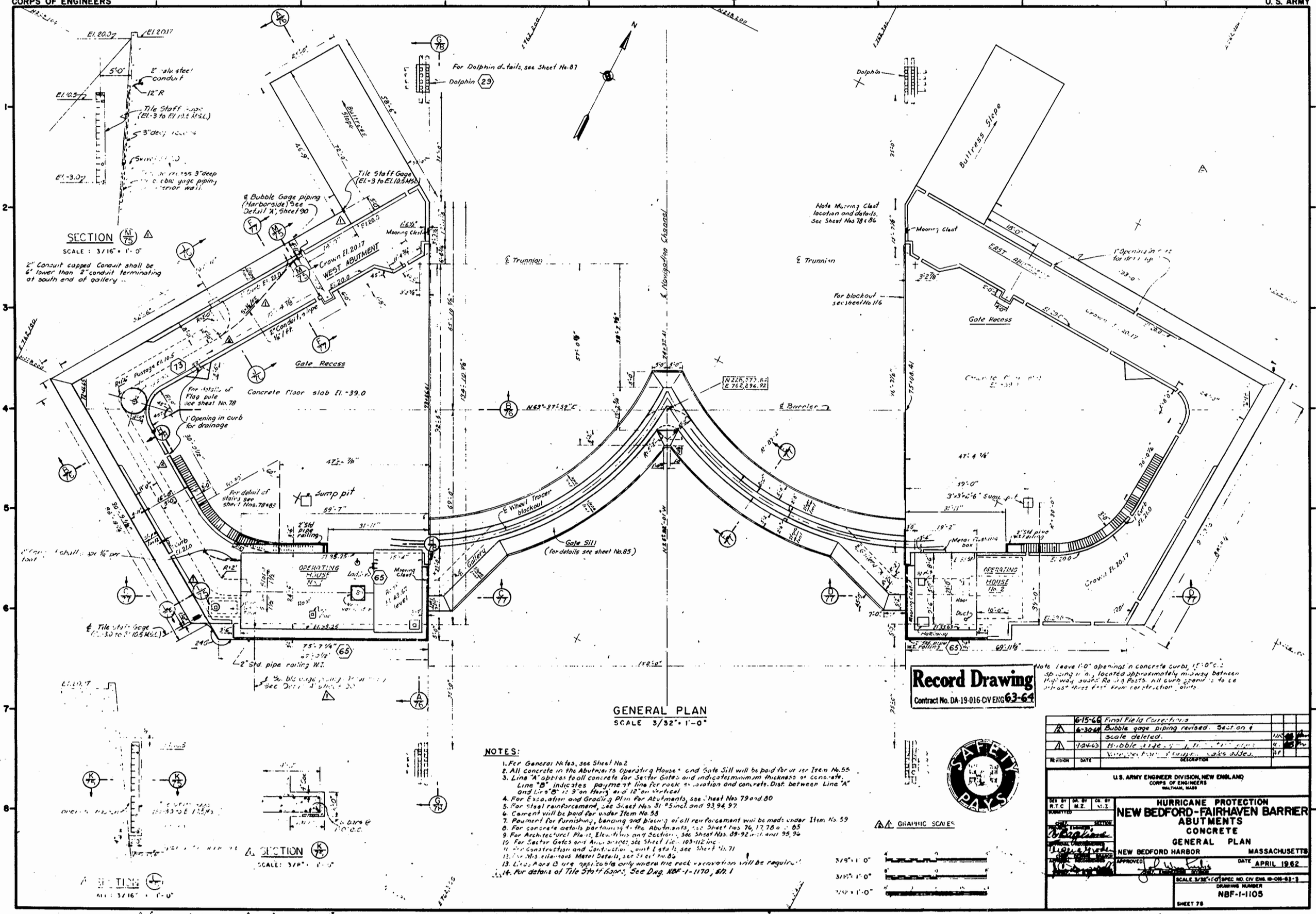

NOTES:

1. For General Notes, see Sheet No. 2
2. All concrete in the Abutments, Operating House, and Gate Sill will be paid for under Item No. 55
3. Line "A" applies to all concrete for Sector Gates and indicates minimum thickness of concrete. Line "B" indicates payment line for rock excavation and concrete. Dist. between Line "A" and Line "B" is 9" on Horiz. and 12" on Vertical
4. For Excavation and Grading Plan for Abutments, see Sheet Nos. 79 and 80
5. For Steel reinforcement, see Sheet Nos. 91 #5 incl. and 93, 94, 97
6. Cement will be paid for under Item No. 58
7. Payment for furnishing, bending and placing of all reinforcement will be made under Item No. 59
8. For concrete details pertaining to the Abutments, see Sheet Nos. 76, 77, 78 & 85
9. For Architectural Plans, Elevations and Sections, see Sheet Nos. 89-92 incl. and 95, 96
10. For Sector Gates and Appurtenances, see Sheet Nos. 103-112 inc.
11. For Construction and Contraction Joint Details, see Sheet No. 71
12. For Miscellaneous Metal Details, see Sheet No. 86
13. Lines A and B are applicable only where the rock excavation will be required
14. For details of Tile Staff Gages, See Dwg. NBF-1-1170, Sh. 1

INFORMATION DWG.

ENGINEERING LIBRARY WORKING COPY
RETURN TO FILE

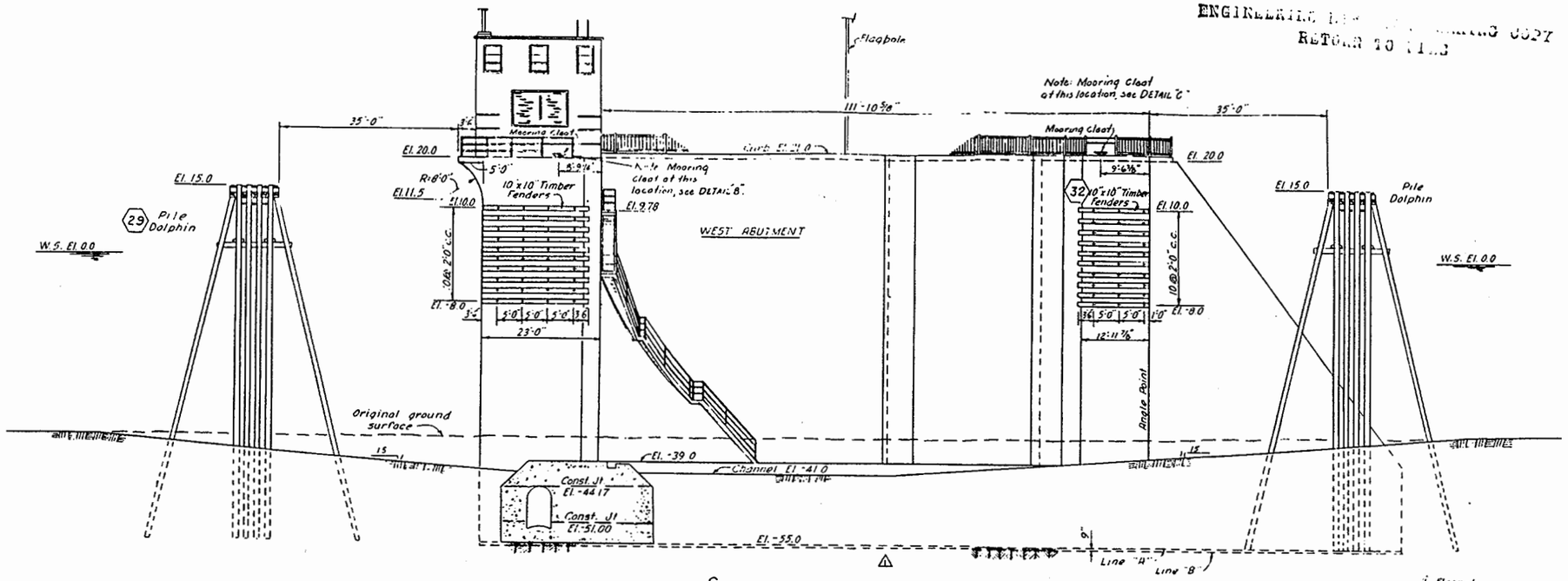

SECTION G/75
SCALE 3/32" = 1'-0"

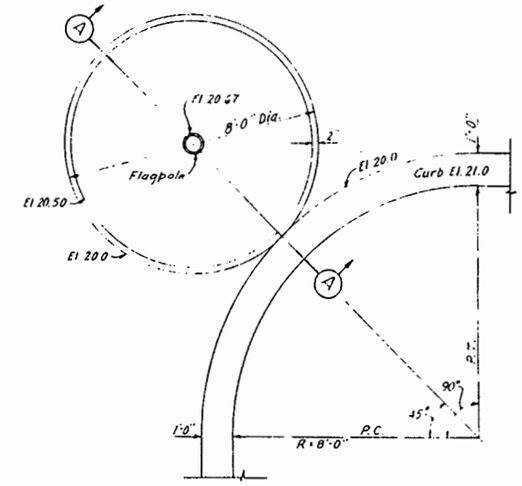

PLAN
SCALE 1/2" = 1'-0"

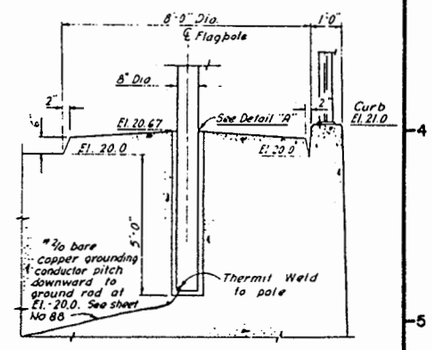

SECTION A-A
SCALE 1/2" = 1'-0"

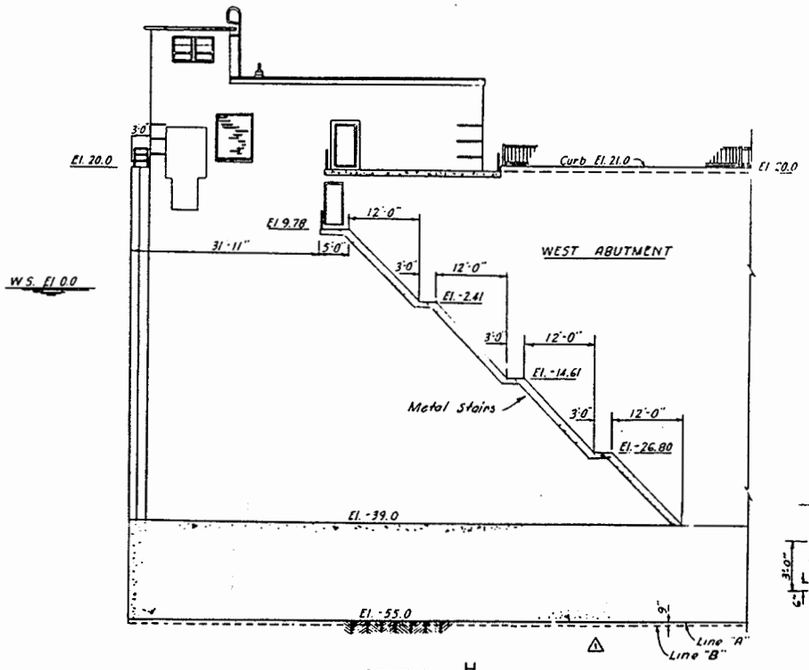

SECTION H/75
SCALE 3/32" = 1'-0"

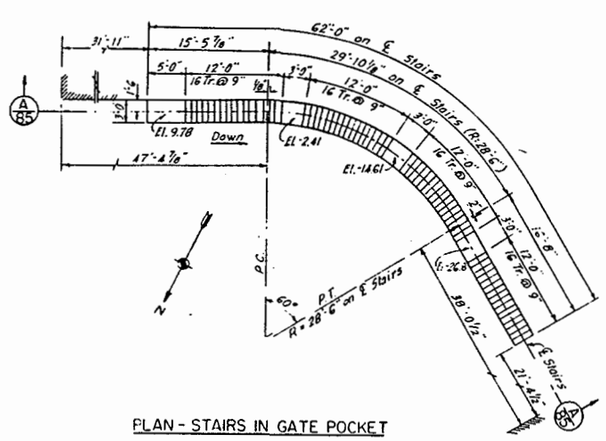

PLAN - STAIRS IN GATE POCKET
WEST ABUTMENT
SCALE 1/8" = 1'-0"

Note: Stairs in Gate Pocket, East Abutment, similar but opposite hand.

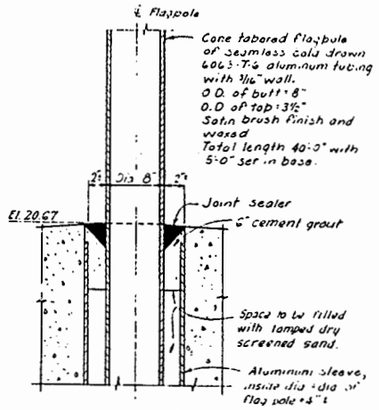

DETAIL "A"
SCALE 1 1/2" = 1'-0"

FLAGPOLE DETAILS
73

NOTES:
1. For general notes see Sheet No. 2
2. For notes applying to this Sheet, see Sheet No. 75
3. For fender details see sheet Nos 104 and 116
4. For mooring cleat details see Sheet No. 86

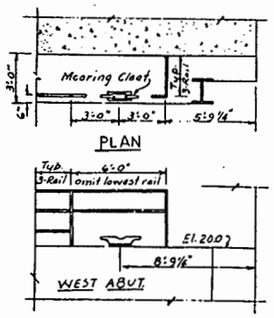

ELEVATION
DETAIL "B"
SCALE 1/4" = 1'-0"

Note: Location of Mooring Cleats EAST ABUT. - Op. hand.

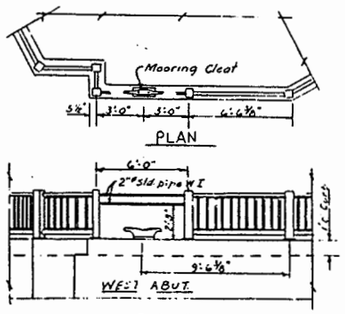

ELEVATION
DETAIL "C"
SCALE 1/4" = 1'-0"

GRAPHIC SCALES
SCALE 3/32" = 1'-0"
SCALE 1/8" = 1'-0"
SCALE 1/2" = 1'-0"

REVISION	DATE	DESCRIPTION	
1	11-20-62	Notes Deleted (Am #1)	

U.S. ARMY ENGINEER DIVISION, NEW ENGLAND
CORPS OF ENGINEERS
WALTHAM, MASS.

DES BY M.Z. | DR BY R.P.M. | CK BY RTC

SUBMITTED: CHIEF, DESIGN SECTION
PROJECT ENGINEER
APPROVAL RECOMMENDED: CHIEF, DESIGN BRANCH
APPROVAL RECOMMENDED: CHIEF, ENGINEERING DIVISION
APPROVED: CHIEF, ENGINEERING DIVISION

HURRICANE PROTECTION
NEW BEDFORD-FAIRHAVEN BARRIER
ABUTMENTS
CONCRETE
ELEVATION SECTIONS & DETAILS NO. 3
NEW BEDFORD HARBOR MASSACHUSETTS

DATE APRIL 1962
SCALE AS SHOWN | SPEC NO CIV ENG 19-016-63-3
DRAWING NUMBER NBF-1-1108
SHEET 78

INFORMATION DWG.

CORPS OF ENGINEERS — U. S. ARMY

BEAM SCHEDULE

WEIGHT OF 14 WFs

TRUSS NO.	(A'C)	(A'R)	(B L)	(B M)	(C E)	(C K)	(C'N)	(D Q)	(D P)	(E F)	(E G)	(E N)	(G N)	(H J)	(H N)	(R J)	(J K)	(J N)	(K N)	(L M)	(Q P)
I	78	78	53	53	61	53	53	53	53	53	87	53	87	87	87	53	87	87	87	53	53
II	184	184	53	53	111	53	68	53	53	61	87	53	87	87	87	61	142	87	87	53	53
III	184	184	53	53	119	78	78	53	53	61	87	53	87	87	87	61	167	87	87	53	53
IV	246	184	53	53	119	167	78	53	53	61	87	78	87	136	87	61	370	219	127	53	53
V	202	219	53	53	119	142	53	53	53	53	87	61	87	87	87	53	314	167	95	53	53

GUSSET & SCHEDULE

JOINT & THICKNESS

TRUSS NO.	(B)	(C)	(D)	(E)	(J)	(K)	(L)	(M)	(N)	(P)	(Q)
I	11/16"	11/16"	5/16"	5/16"	11/16"	5/16"	5/16"	5/16"	5/16"	11/16"	5/16"
II	5/16"	5/16"	5/16"	5/16"	5/16"	11/16"	11/16"	5/16"	5/16"	5/16"	5/16"
III	5/16"	5/16"	5/16"	11/16"	11/16"	5/16"	5/16"	5/16"	5/16"	5/16"	5/16"
IV	5/16"	1/2"	5/16"	5/16"	1/2"	1/2"	5/16"	5/16"	1/2"	5/16"	5/16"
V	11/16"	1 1/16"	5/16"	11/16"	1/2"	1 1/16"	5/16"	5/16"	1/2"	11/16"	5/16"

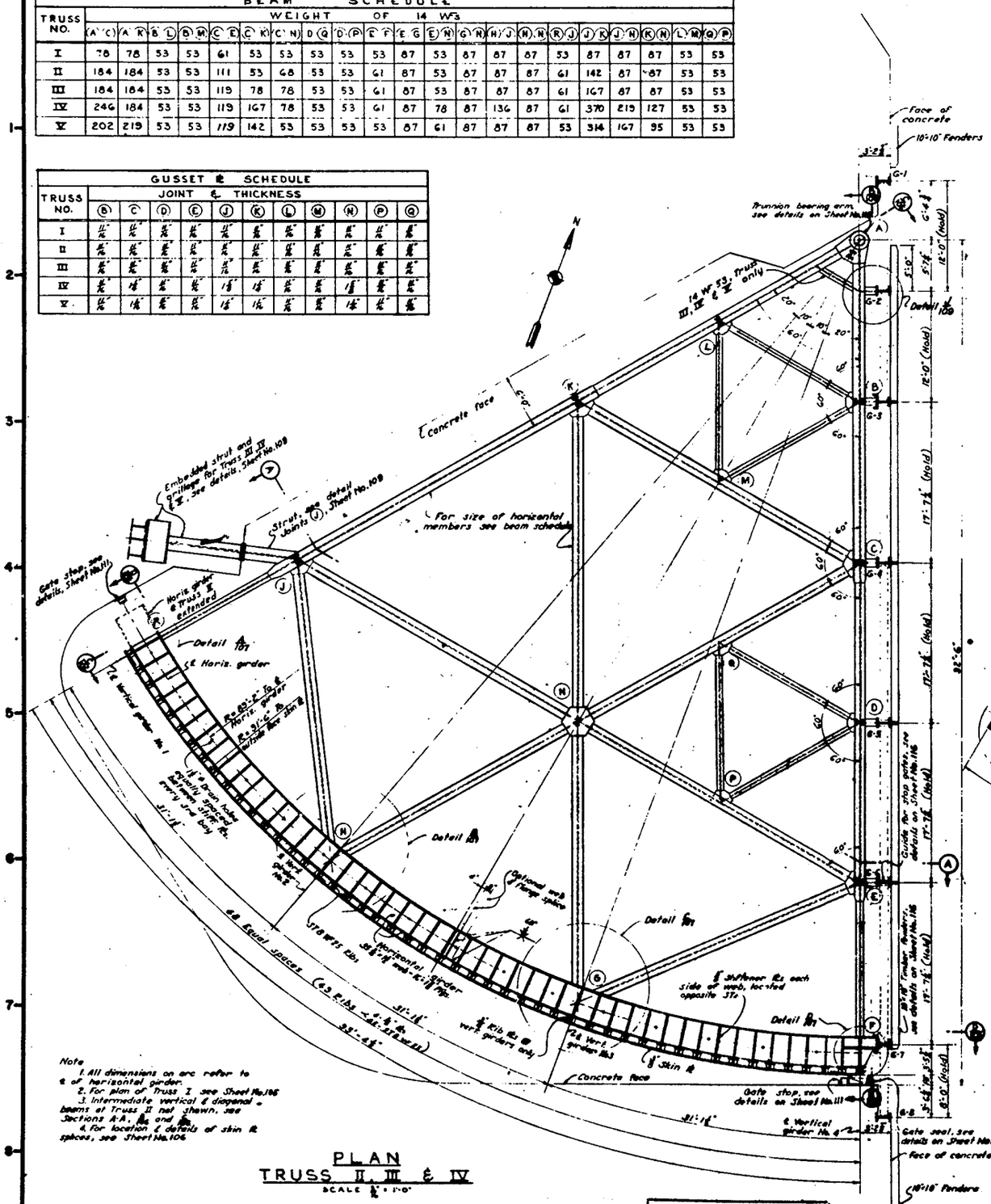

PLAN
TRUSS II, III & IV
SCALE 1/8" = 1'-0"

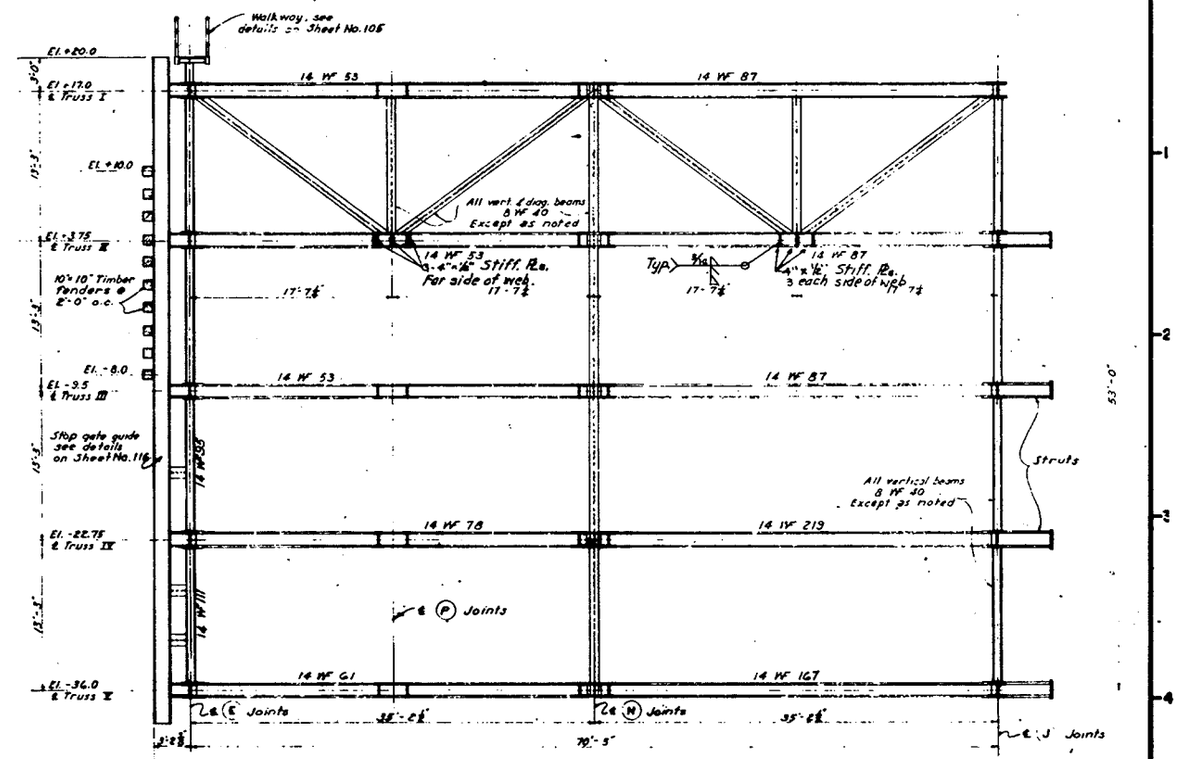

SECTION A-A
SCALE 1/8" = 1'-0"

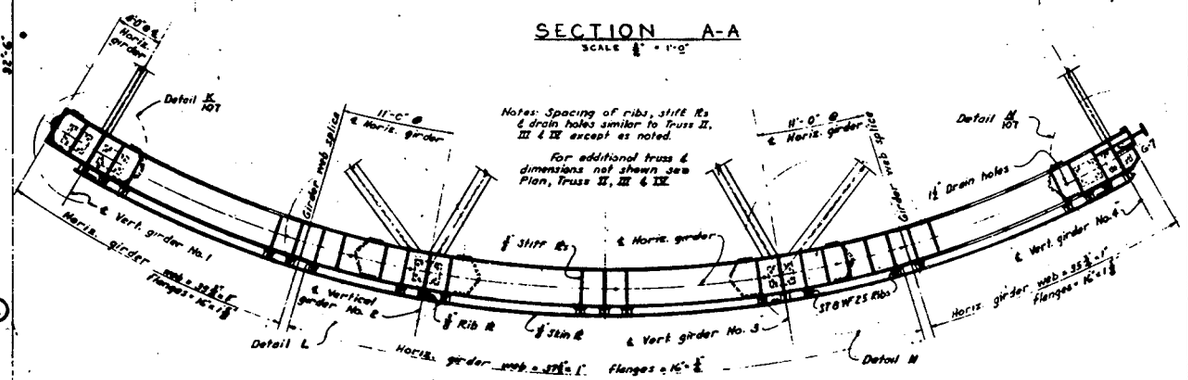

PLAN — TRUSS V
SCALE 1/8" = 1'-0"

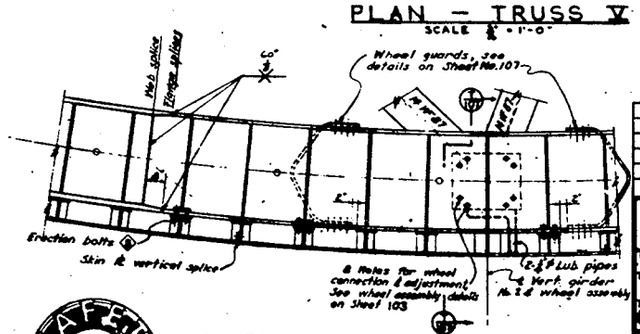

DETAIL L

DETAIL M — SIMILAR BUT OPP. HAND

SCALE 1/2" = 1'-0"

GRAPHIC SCALES

3/4" = 1'-0"

1/2" = 1'-0"

NOTES

1. West gate leaf shown, east leaf opposite hand.
2. Gate leaf shown in stowed position to receive stop gates.
3. All material shown on this Sheet shall be paid for under Item 52.

REVISION	DATE	DESCRIPTION	BY
	6-18-66	Final field corrections	

U.S. ARMY ENGINEER DIVISION, NEW ENGLAND
CORPS OF ENGINEERS
WALTHAM, MASS.

HURRICANE PROTECTION
NEW BEDFORD-FAIRHAVEN BARRIER
SECTOR GATES
STRUCTURAL
FRAMING DETAILS NO. I

NEW BEDFORD HARBOR — MASSACHUSETTS

APPROVED — DATE APRIL 1962

SCALE AS SHOWN | SPEC. NO. CTV E(m)-19-016-63-3

DRAWING NUMBER NBF-1-1134

SHEET 104

Record Drawing
Contract No. DA-19-016-CIVENG-63-64

SAFETY PAYS

INFORMATION DWG.

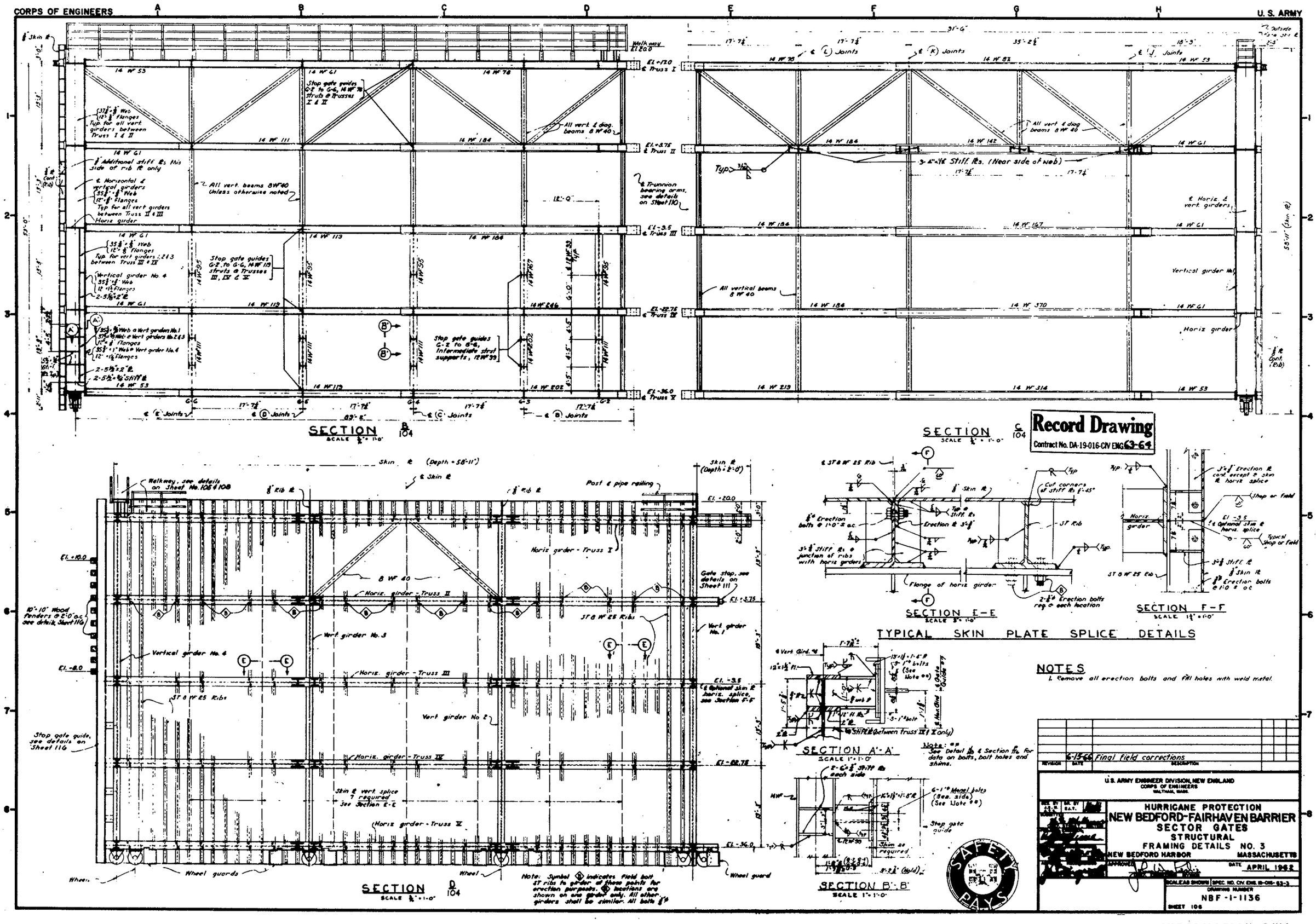

INFORMATION DWG.

NORFOLK FLOODWALL
GATE CLOSURES

US Army Corps of Engineers
Norfolk District

NO.	DATE	DESCRIPTION

DESIGNED: XXX
DRAWN: XXX
CHECKED: XXX
SUBMITTED: XXX
SIZE: XX-XXX-13
SCALE: AS SHOWN
PROJECT NO: XXXXXX
SUPPLEMENTAL FILE NO: XXX
FY-NO: XXXXXX
CONTRACT/SOLICITATION NO: YR-X-XXXX
Last saved on:
File name:
File scale: 1:1

NORFOLK DISTRICT
CORPS OF ENGINEERS
NORFOLK, VIRGINIA

10% DESIGN
SUBMITTAL
M

MIAMI-DADE BACK BAY COASTAL STORM
RISK MANAGEMENT (CSRM) STUDY

NORFOLK FLOODWALL
GATE CLOSURES

SHEET
REFERENCE
NUMBER
S-REF3
SHEET XXX OF XXX

REVISIONS			
SYM	DESCRIPTION	DATE	APPROVED

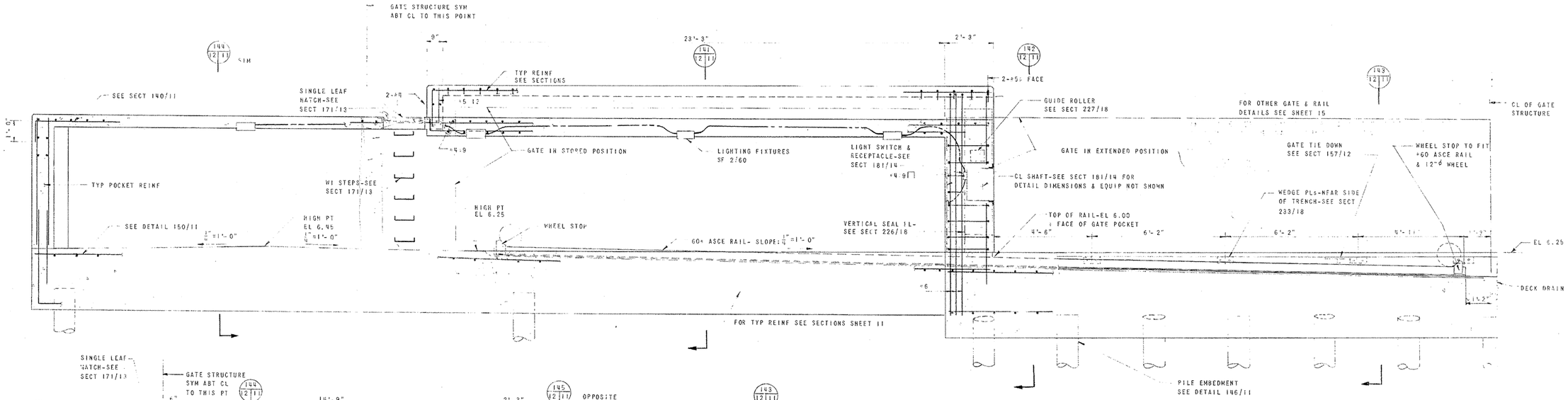

NOTE: FOR CONDUITS & SLEEVES SEE SHEET 8.

SECTION (155 / 11 12)
SCALE: 1/2"=1'-0"

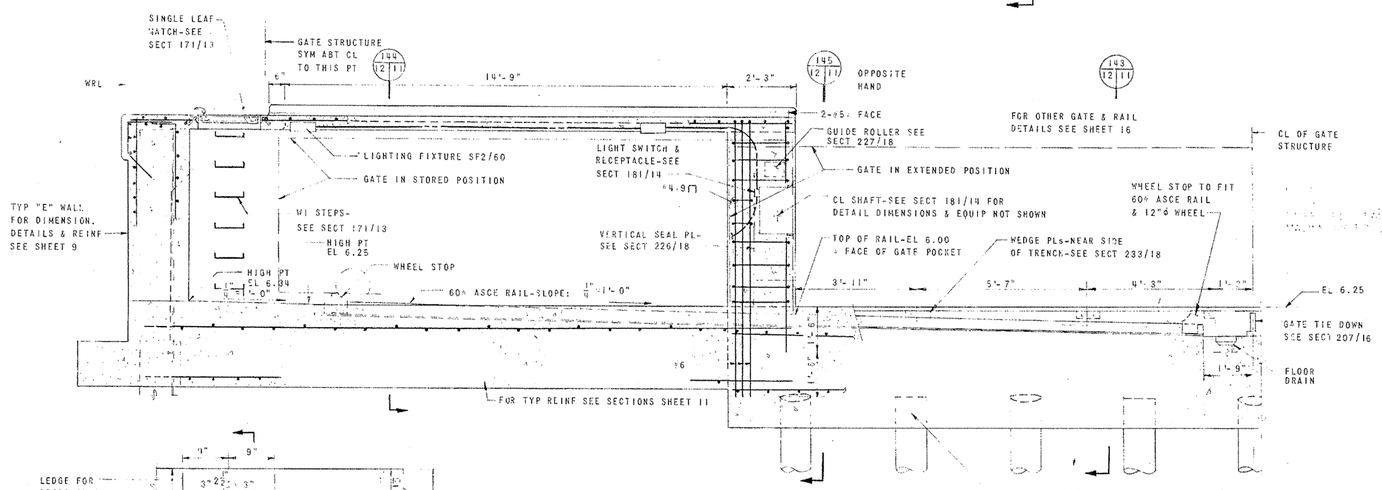

SECTION (156 / 11 12)
SCALE: 1/2"=1'-0"

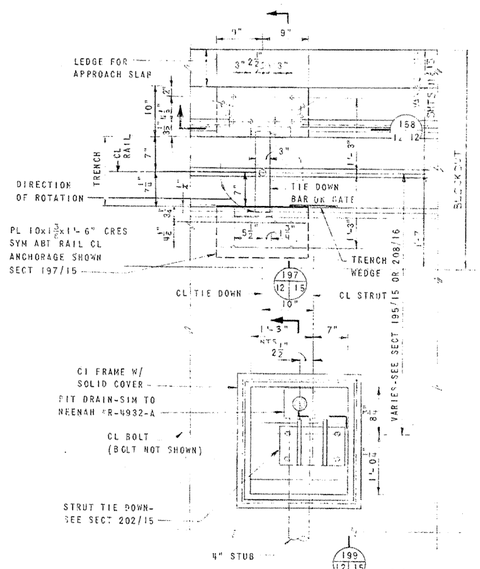

PLAN SECTION (157 / 11 12)
SCALE: 1"=1'-0"
13

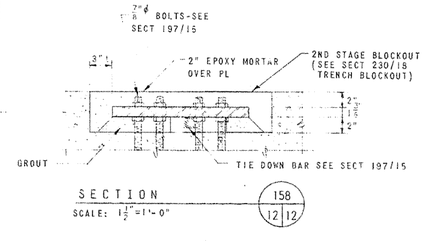

SECTION (158 / 12 12)
SCALE: 1 1/2"=1'-0"

NOTE:
GATE AND STRUT TIE DOWN SHOWN SECT 157/12 APPLIES AS SHOWN AND OPPOSITE HAND TO THE MAIN ST. GATE. THE STRUT TIE DOWN AS SHOWN WILL BE SIMILAR FOR THE RAMP "G" GATE. THE GATE TIE DOWN AS SHOWN WILL BE SIMILAR FOR THE NORTH SERVICE ROAD GATE.

NOTES:
1. ALL VERTICAL TIMBER PILES SHOWN ON THIS SHEET WILL BE PAID FOR UNDER CONTRACT PAYMENT ITEM 4a
2. ALL BATTERED TIMBER PILES SHOWN ON THIS SHEET WILL BE PAID FOR UNDER CONTRACT PAYMENT ITEM 4b
3. TEST PILE LOADING WILL BE PAID FOR UNDER CONTRACT PAYMENT ITEM 4c
4. ALL ELECTRICAL WORK AND LIGHTING SHOWN ON THIS SHEET WILL BE PAID FOR UNDER CONTRACT PAYMENT ITEM 9
5. EXCEPT AS OTHERWISE NOTED OR INDICATED, ALL WORK SHOWN ON THIS SHEET WILL BE PAID UNDER CONTRACT PAYMENT ITEM 1

GRAPHIC SCALES
1 1/2"=1'-0": 0, 3", 6", 9", 1', 2'
1/2"=1'-0": 0, 1', 2', 3', 6'

HAYES, SEAY, MATTERN & MATTERN ARCHITECTS & ENGINEERS ROANOKE, VIRGINIA	U. S. ARMY ENGINEER DISTRICT, NORFOLK CORPS OF ENGINEERS NORFOLK, VIRGINIA
DES. BY / CK'D BY / SUB. BY	FLOODWALL NORFOLK, VA. CENTRAL BUSINESS DISTRICT
APP. REC.	
CHIEF, STRUCTURAL SECTION	
APP. REC.	MAIN ST. & RAMP "G"
CHIEF, DESIGN BRANCH	GATE STRUCTURE - SECTIONS
APP. REC.	
CHIEF, ENGINEERING DIVISION	
APPROVED:	CODE IDENT. NO. / SIZE F / NORFOLK DISTRICT FILE NO. C-58-10-11(12)
COL., CORPS OF ENGRS, DISTRICT ENGINEER	SCALE: AS NOTED / JANUARY 1968 / SHEET 12 OF 32

REVISIONS			
SYM	DESCRIPTION	DATE	APPROVED

NOTES:

1. ALL VERTICAL TIMBER PILES SHOWN ON THIS SHEET WILL BE PAID FOR UNDER CONTRACT PAYMENT ITEM (8a).
2. ALL BATTERED TIMBER PILES SHOWN ON THIS SHEET WILL BE PAID FOR UNDER CONTRACT PAYMENT ITEM (8b).
3. TEST PILE LOADING WILL BE PAID FOR UNDER CONTRACT PAYMENT ITEM (8c).
4. ALL ELECTRICAL WORK AND LIGHTING SHOWN ON THIS SHEET WILL BE PAID FOR UNDER CONTRACT PAYMENT ITEM (9).
5. EXCEPT AS OTHERWISE NOTED OR INDICATED, ALL WORK SHOWN ON THIS SHEET WILL BE PAID UNDER CONTRACT PAYMENT ITEM (1).

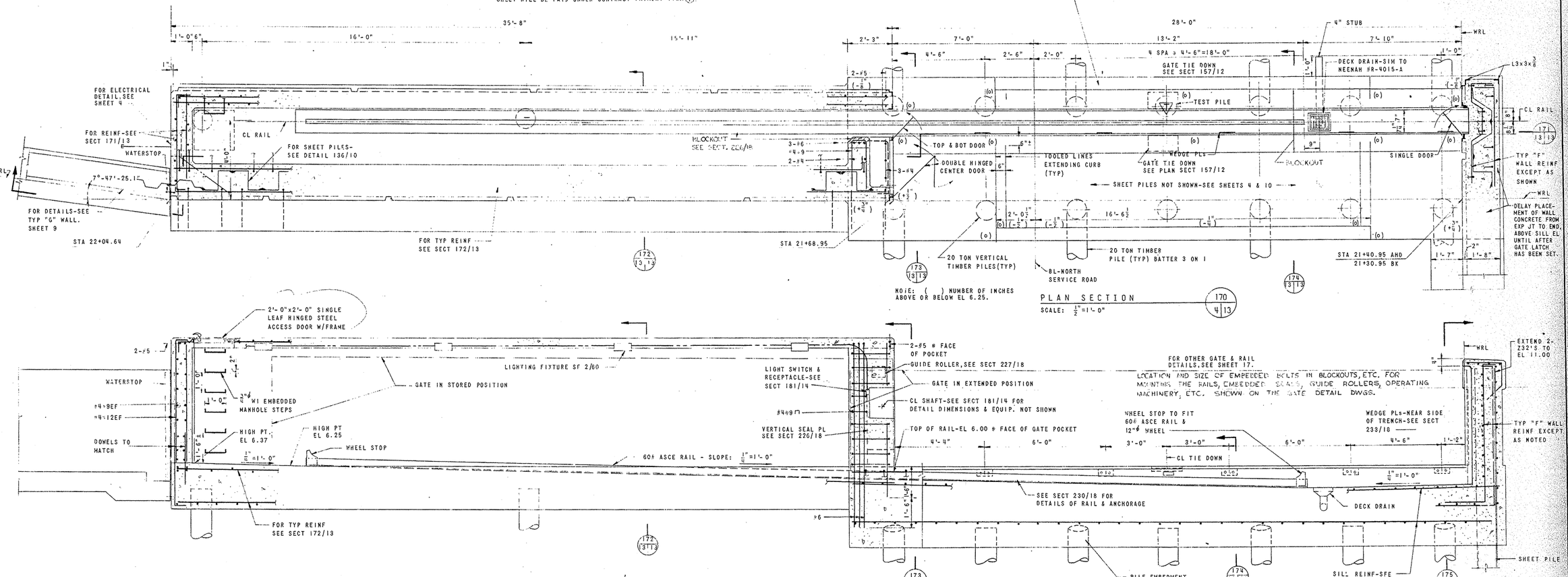

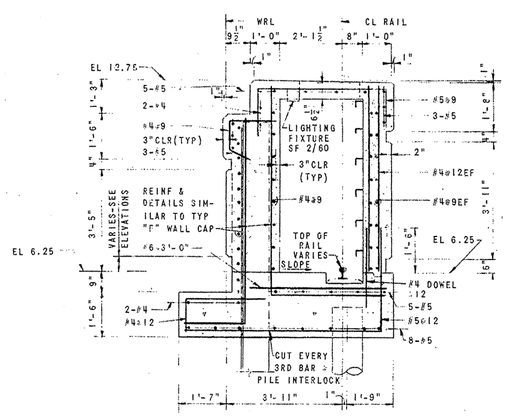

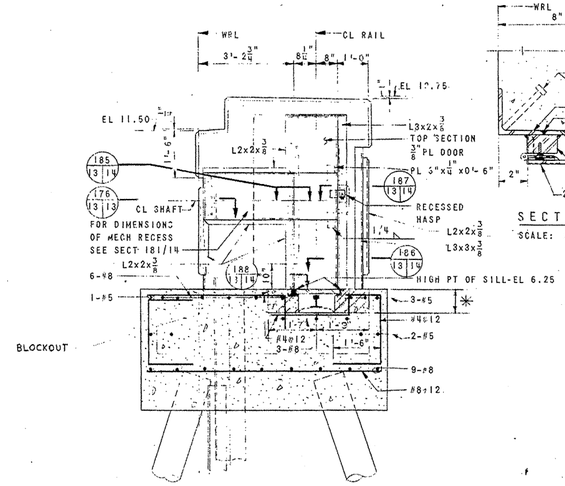

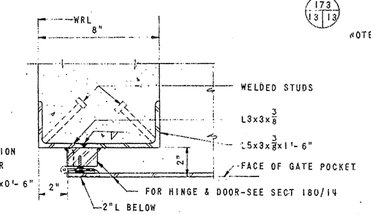

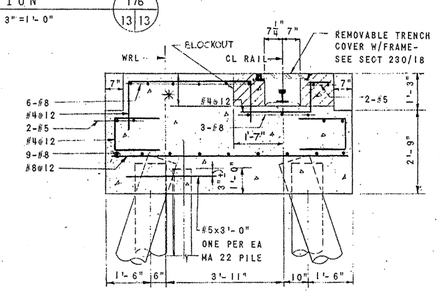

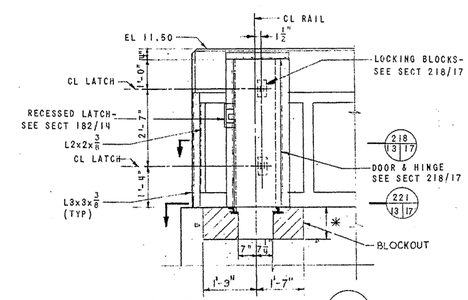

* BOTTOM ELEVATION OF BLOCKOUT SHALL COINCIDE WITH BOTTOM OF TRENCH.

GRAPHIC SCALES

3"=1'-0" 0 1" 2" 3" 6" 9" 1'

1/2"=1'-0" 0 1' 2' 3' 6'

HAYES, SEAY, MATTERN & MATTERN ARCHITECTS & ENGINEERS ROANOKE, VIRGINIA	U. S. ARMY ENGINEER DISTRICT, NORFOLK CORPS OF ENGINEERS NORFOLK, VIRGINIA
DES. BY / CK'D BY / SUB. BY	FLOODWALL NORFOLK, VA. CENTRAL BUSINESS DISTRICT
APP. REC.	
CHIEF, STRUCTURAL SECTION	NORTH SERVICE ROAD GATE STRUCTURE
APP. REC.	
CHIEF, DESIGN BRANCH	
APP. REC.	
CHIEF, ENGINEERING DIVISION	
APPROVED:	CODE IDENT. NO. / SIZE / NORFOLK DISTRICT FILE NO.
COL., CORPS OF ENGRS, DISTRICT ENGINEER	F / C-56-10-11(13)
	SCALE AS NOTED / JANUARY 1968 / SHEET 13 OF 72

REVISIONS			
SYM	DESCRIPTION	DATE	APPROVED

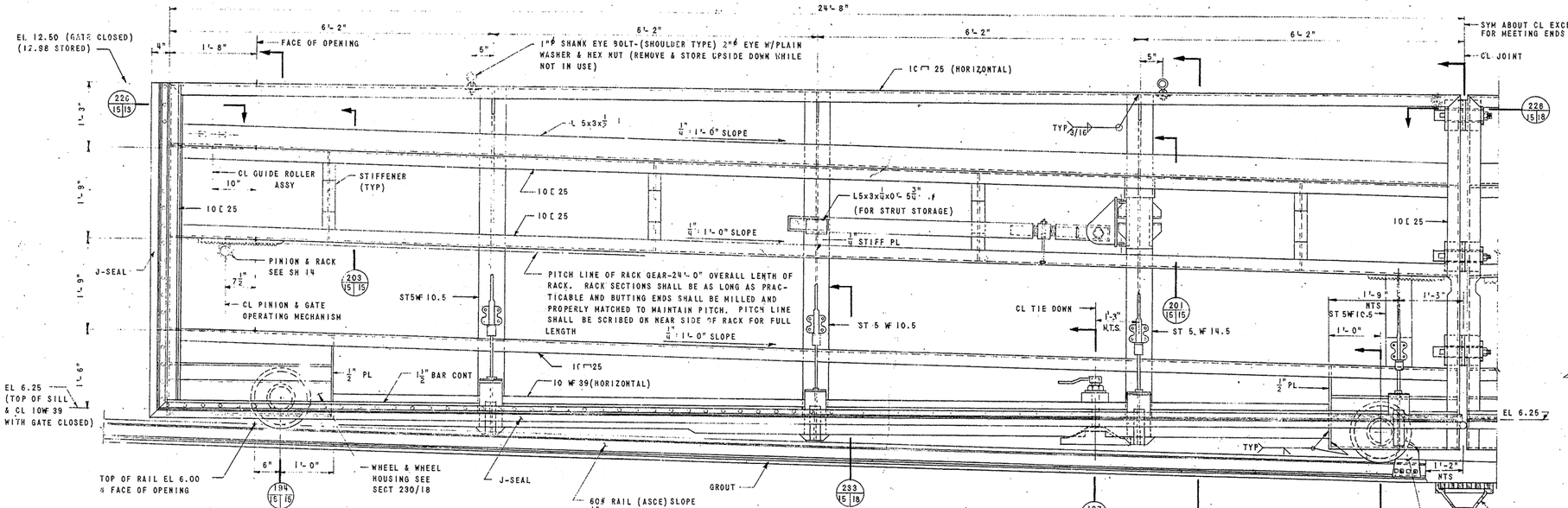

MAIN STREET GATE ELEVATION
SCALE: 1"=1'-0"
(PROTECTED SIDE VIEW SHOWING SOUTH(LEFT) LEAF, NORTH LEAF OPPOSITE HAND AND SIMILAR)

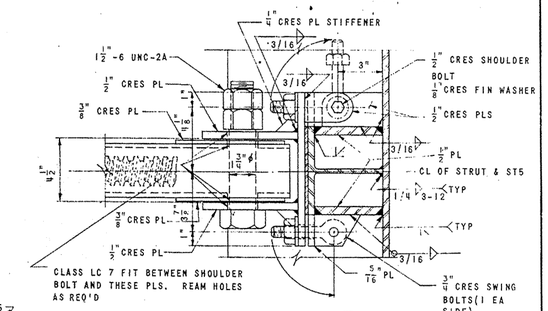

SECTION 200/15|15
SCALE: 3"=1'-0"

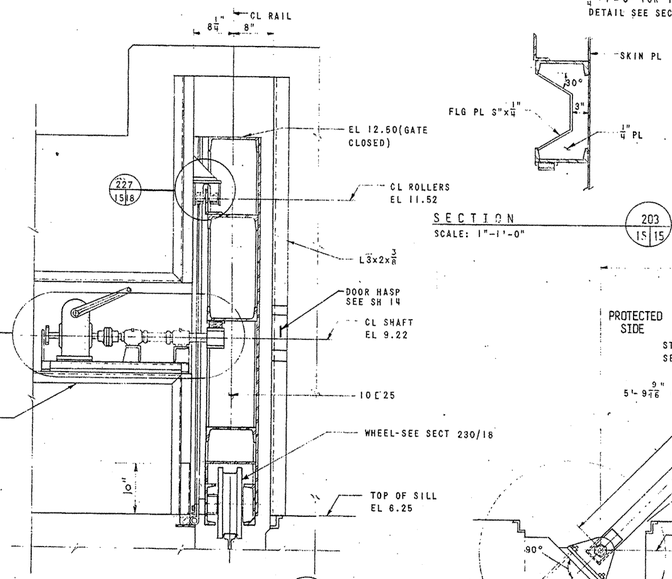

SECTION 203/15|15
SCALE: 1"=1'-0"

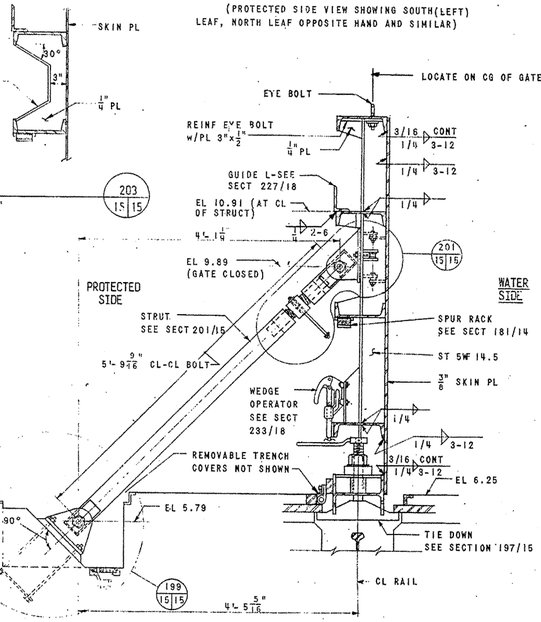

SECTION 195/15|15
SCALE: 1"=1'-0"

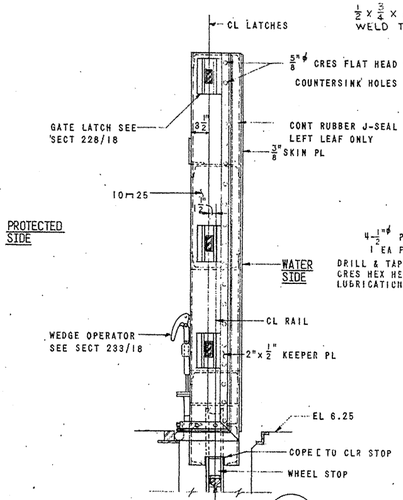

SECTION 196/15|15
SCALE: 1"=1'-0"

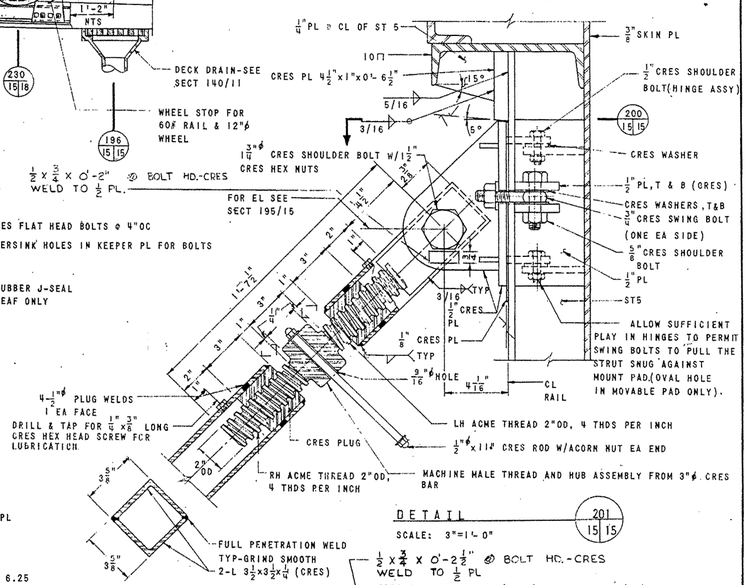

DETAIL 201/15|15
SCALE: 3"=1'-0"

SECTION 202/15|15
SCALE: 3"=1'-0"

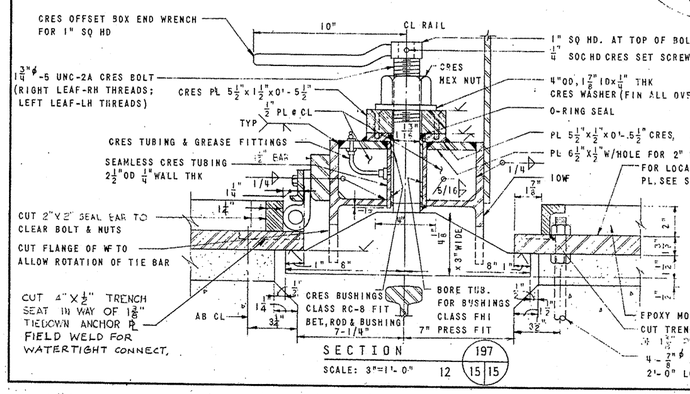

SECTION 197/15|15
SCALE: 3"=1'-0"

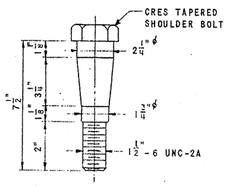

DETAIL 198/15|15
SCALE: 3"=1'-0"

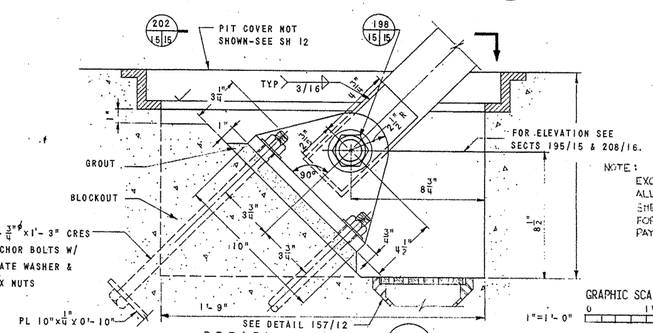

DETAIL 199/15|15
SCALE: 3"=1'-0"

NOTE:
EXCEPT AS OTHERWISE INDICATED, ALL WORK SHOWN ON THIS SHEET WILL BE PAID FOR UNDER CONTRACT PAYMENT ITEM 1.

GRAPHIC SCALES
1"=1'-0" 0 1' 2' 3'
3"=1'-0" 0 1" 2" 3" 6" 9" 1'

HAYES, SEAY, MATTERN & MATTERN ARCHITECTS & ENGINEERS ROANOKE, VIRGINIA	U. S. ARMY ENGINEER DISTRICT, NORFOLK CORPS OF ENGINEERS NORFOLK, VIRGINIA
DES. BY / CK'D BY / SUB. BY	FLOODWALL NORFOLK, VA. CENTRAL BUSINESS DISTRICT
APP. REC.	
CHIEF, MECHANICAL SECTION	
APP. REC.	MAIN STREET GATE ELEVATION
CHIEF, DESIGN BRANCH	
APP. REC.	
CHIEF, ENGINEERING DIVISION	
APPROVED:	
COL., CORPS OF ENGRS, DISTRICT ENGINEER	CODE IDENT. NO. F / NORFOLK DISTRICT FILE NO. C-56-10-11(15)
	SCALE: AS NOTED / JANUARY 1968 / SHEET 15 OF 32

REVISIONS			
SYM	DESCRIPTION	DATE	APPROVED

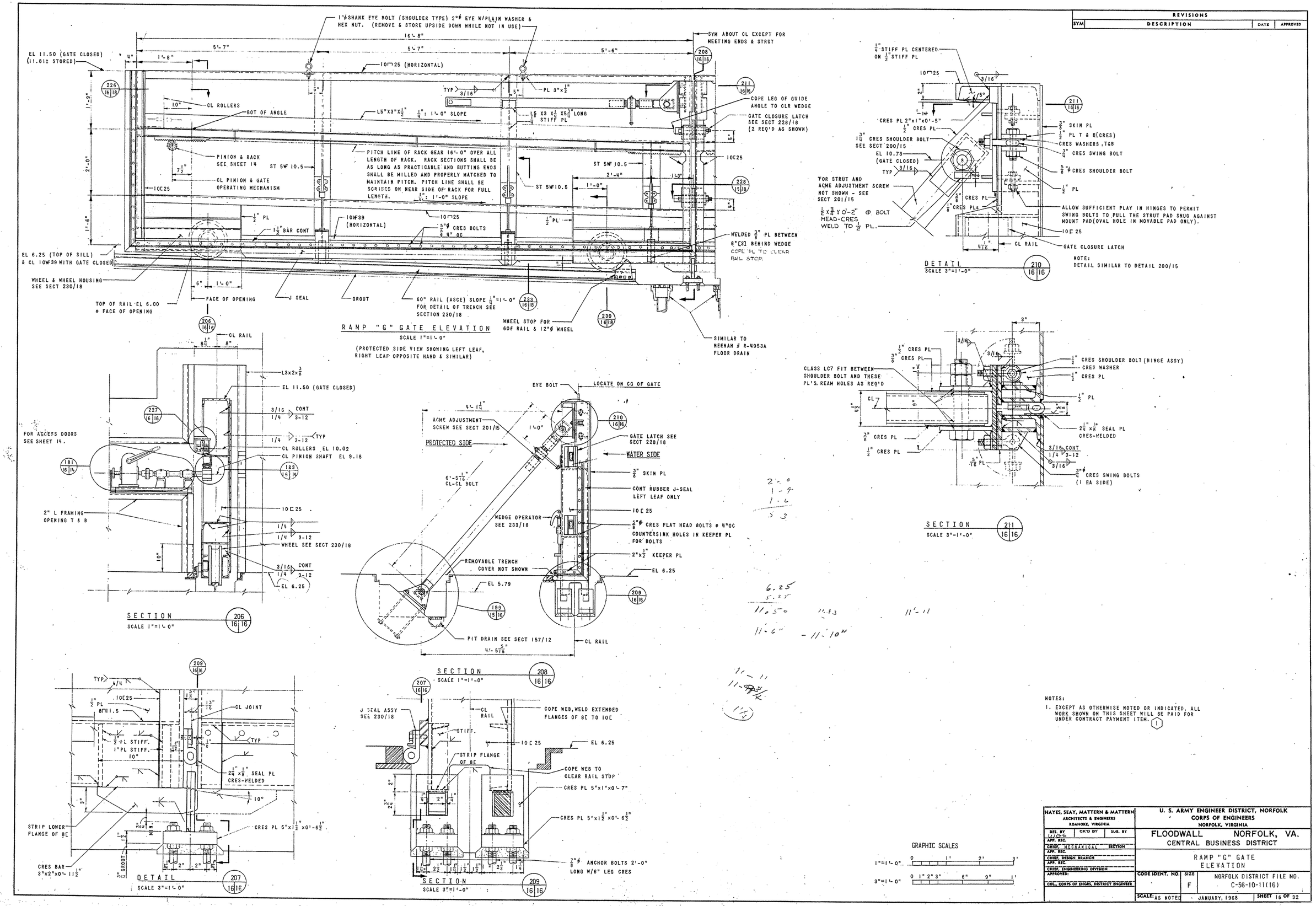

NOTES:

1. EXCEPT AS OTHERWISE NOTED OR INDICATED, ALL WORK SHOWN ON THIS SHEET WILL BE PAID FOR UNDER CONTRACT PAYMENT ITEM. (1)

HAYES, SEAY, MATTERN & MATTERN ARCHITECTS & ENGINEERS ROANOKE, VIRGINIA	U. S. ARMY ENGINEER DISTRICT, NORFOLK CORPS OF ENGINEERS NORFOLK, VIRGINIA	
DES. BY WGS / CK'D BY / SUB. BY	FLOODWALL NORFOLK, VA. CENTRAL BUSINESS DISTRICT	
APP. REC.		
CHIEF, MECHANICAL SECTION		
APP. REC.		
CHIEF, DESIGN BRANCH	RAMP "G" GATE ELEVATION	
APP. REC.		
CHIEF, ENGINEERING DIVISION		
APPROVED:	CODE IDENT. NO. / SIZE F	NORFOLK DISTRICT FILE NO. C-56-10-11(16)
COL, CORPS OF ENGRS, DISTRICT ENGINEER	SCALE: AS NOTED / JANUARY, 1968	SHEET 16 OF 32

REVISIONS			
SYM	DESCRIPTION	DATE	APPROVED

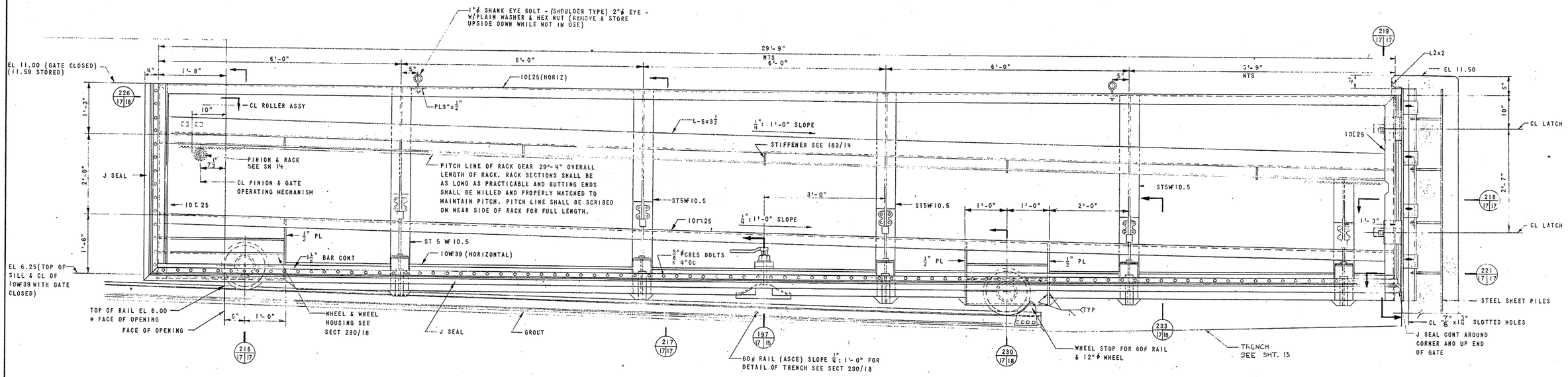

NORTH SERVICE ROAD GATE ELEVATION
SCALE 1"=1'-0"
(PROTECTED SIDE VIEW)

INSTALLATION NOTE:
LIMITED INSTALLATION CLEARANCE MAY REQUIRE REMOVAL OF RUBBER J-SEALS BEFORE INSTALLING THIS GATE LEAF.

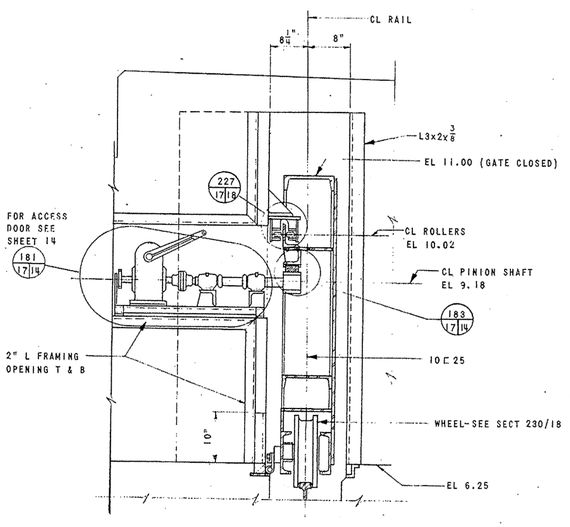

SECTION
SCALE 1"=1'-0"

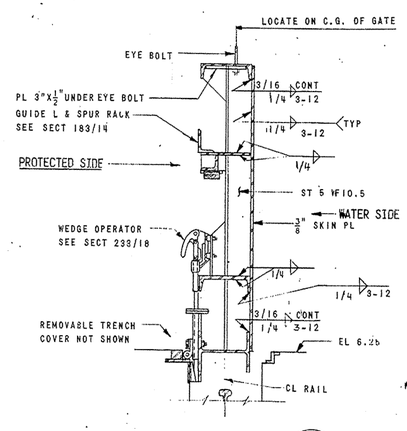

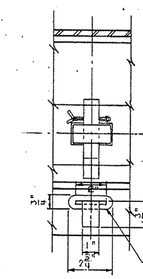

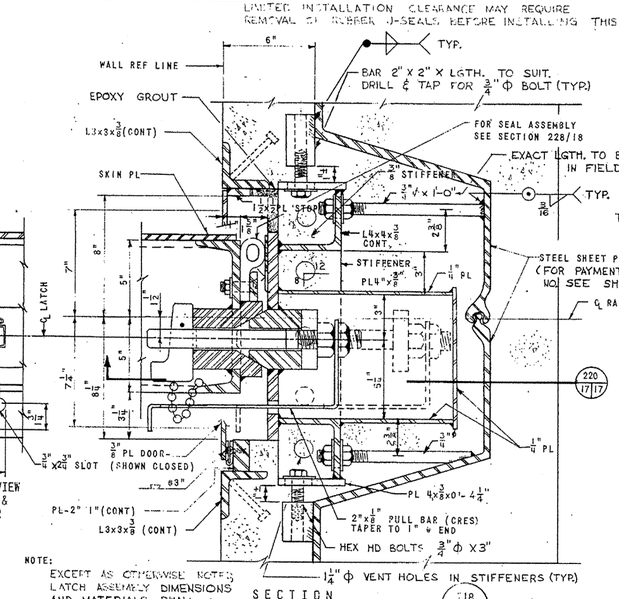

NOTE:
EXCEPT AS OTHERWISE NOTED LATCH ASSEMBLY DIMENSIONS AND MATERIALS SHALL CONFORM TO SECT. 228/18.

SECTION
SCALE 3"=1'-0"

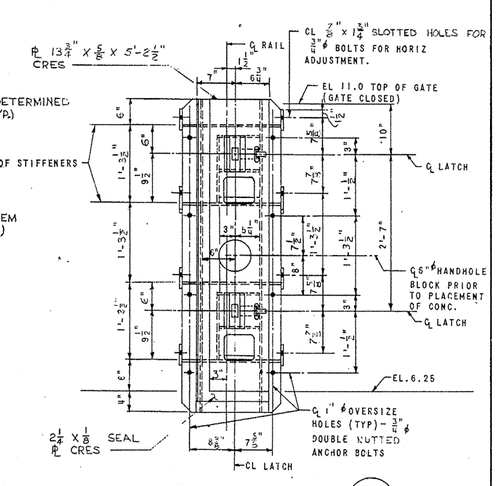

SECTION
SCALE: 1"=1'-0"

NOTE:
EXCEPT AS OTHERWISE INDICATED, ALL WORK SHOWN ON THIS SHEET WILL BE PAID FOR UNDER CONTRACT PAYMENT ITEM 1.

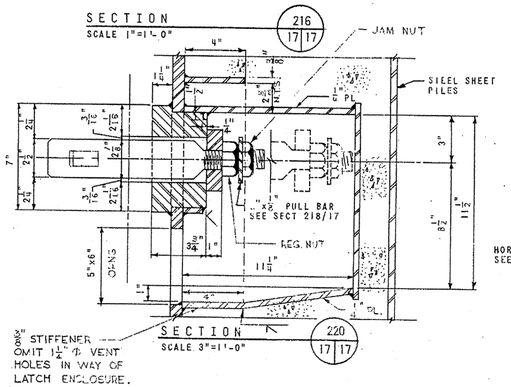

SECTION
SCALE 3"=1'-0"

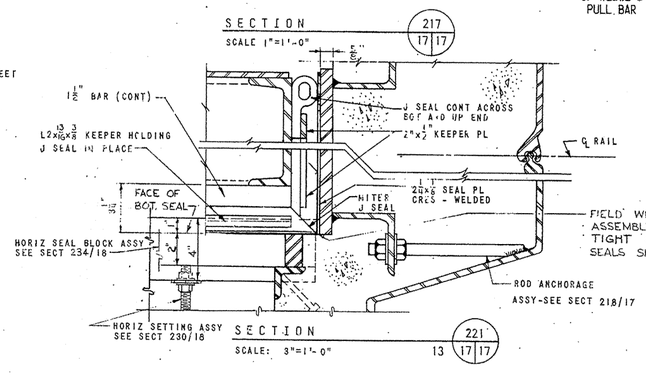

SECTION
SCALE: 3"=1'-0"

GRAPHIC SCALES
1"=1'-0" 0 1' 2' 3'
3"=1'-0" 0 1" 2" 3" 6" 9" 1'

HAYES, SEAY, MATTERN & MATTERN ARCHITECTS & ENGINEERS ROANOKE, VIRGINIA	U. S. ARMY ENGINEER DISTRICT, NORFOLK CORPS OF ENGINEERS NORFOLK, VIRGINIA
DES. BY / CK BY / SUB. BY / APP. REC. / CHIEF, MECHANICAL SECTION / APP. REC. / CHIEF, DESIGN BRANCH / APP. REC. / CHIEF, ENGINEERING DIVISION / APPROVED: / COL., CORPS OF ENGRS, DISTRICT ENGINEER	FLOODWALL NORFOLK, VA CENTRAL BUSINESS DISTRICT
	NORTH SERVICE ROAD GATE ELEVATION
CODE IDENT. NO. / SIZE F	NORFOLK DISTRICT FILE NO. C-56-10-11(17)
SCALE: AS NOTED	JANUARY 1968 / SHEET 17 OF 33

CHAPTER 5 REFERENCES

1. Norfolk Coastal Storm Risk Management Study. 2018. USACE Norfolk District.

2. USACE. 2011. Evaluation of I-walls. Engineer Technical Letter 1110-2-575. U.S. Army Corps of Engineers.

3. USACE. 2017. Design and Evaluation of I-Walls Including Sheet Pile Walls. Engineering and Construction Bulletin No. 2017-3. U.S. Army Corps of Engineers.

4. USACE. 2006. Coastal Engineering Manual (CEM). U.S. Army Corps of Engineers

5. USACE. 1989. Retaining and Flood Walls. Engineer Manual 1110-2-2502. U.S. Army Corps of Engineers.