U.S. ARMY CORPS OF ENGINEERS BUILDING STRONG®

Duluth Vessel Yard
Duluth, Minnesota

Environmental Assessment Repair and Improvement of the Duluth Vessel Yard Duluth, St. Louis County, Minnesota

June 2020

DULUTH VESSEL YARD

DRAFT
ENVIRONMENTAL ASSESSMENT
REPAIR AND IMPROVEMENT OF THE DULUTH VESSEL YARD

Cover Photo:
Corey Weston, Civil Engineer, USACE Duluth Area Office

Prepared for:

US Army Corps of Engineers
Detroit District (CELRE)
477 Michigan Ave.
Detroit, MI 48226

Prepared by:

US Army Corps of Engineers
Detroit District (CELRE)
477 Michigan Ave.
Detroit, MI 48226
Kevin A. Meyer, Ph.D.
+1-313-226-6748

St. Louis County, Minnesota
June 2020

DEPARTMENT OF THE ARMY
U.S. ARMY CORPS OF ENGINEERS, DETROIT DISTRICT
477 MICHIGAN AVENUE
DETROIT MI 48226-2550

19-Jun-20

PRELIMINARY FINDING OF NO SIGNIFICANT IMPACT
Environmental Assessment: Repair and Improvement of the Duluth Vessel Yard
Duluth, St. Louis County, Minnesota

The U.S. Army Corps of Engineers, Detroit District (Corps) has conducted an environmental analysis in accordance with the National Environmental Policy Act of 1969, as amended. The Environmental Assessment (EA) and 404(b)(1) evaluation dated 19 June 2020, for the Repair and Improvement of the Duluth Vessel Yard addresses the need to repair and improve the deteriorated piers at the Corps' Duluth Vessel Yard in Duluth, St. Louis County, Minnesota to meet the current and future operational needs of the Corps.

The EA and 404(b)(1) evaluation, incorporated herein by reference, evaluated various alternatives that would repair and improve the Duluth Vessel Yard to meet the current and future operations needs of the Corps in the study area. The recommended plan is Alternative 3 and includes:

- Building new mooring bit foundations and seawalls using Steel Sheet Pile (SSP);
- Installing new utility conduits;
- Backfilling areas within newly constructed seawalls;
    - North Pier – 1,600 cubic yards of riprap & 550 cubic yards of aggregate;
    - East Headwall – 700 cubic yards of riprap & 150 cubic yards of aggregate;
    - South Pier – 2,300 cubic yards of riprap & 700 cubic yards of aggregate.
- Grading and placing an aggregate base for new parking areas and work yards (Appendix B, Sheet C-101); Placing a concrete cap, concrete curbing, and fencing over the newly constructed piers (Appendix B, Sheet C-101), and; Installation of light poles and fixtures (Appendix D, Sheet E-110).

In addition to a "no action" plan (Alternative 1), two alternatives were evaluated. The alternatives included; In-kind replacement of piers in their existing footprint (Alternative 2), and Encasing the piers in steel sheet pile and a concrete cap (Alternative 3). The selected alternative and recommend plan is Alternative 3 and is the least impacting alternative meeting the project design criteria.

For all alternatives, the potential effects were evaluated, as appropriate. A summary assessment of the potential effects of the recommended plan are listed in Table 1. Environmental review indicates that no significant cumulative or long-term adverse environmental effects would be expected from implementing the proposed actions. Adverse effects would be minor, limited primarily to short-term noise and air emissions from equipment operation, minor disruption to local aquatic species, loss of benthic

(bottom dwelling) organisms in the immediate work area, a minimal increase in nighttime light levels at the water surface adjacent to the Vessel Yard Piers, and a minimal loss of aquatic habitat (< 1 acre in total). Use of the U.S. Fish and Wildlife Service (USFWS) Information for Planning and Consultation (IPaC) tool and Minnesota Department of Natural Resources (MNDNR) Natural Heritage Information System (NHIS) database identified twelve federally or state listed species that could occur within or near to the project area. None of these species have been observed recently within the project area and no critical habitat or any species will be impacted. Positive environmental impacts could include increased success of peregrine falcon nesting or hunting and increased success of aquatic predation. No impacts are expected to impact recreation, public infrastructure, or the historic nature of the Vessel Yard and the proposed actions will benefit and preserve these resources in the long-term by providing operational capacity to support the Corps mission in the region.

Table 1: Summary of Potential Effects of the Recommended Plan

	Insignificant effects	Insignificant effects as a result of mitigation*	Resource unaffected by action
Aesthetics	☐	☐	☒
Air quality	☒	☐	☐
Aquatic resources/wetlands	☐	☐	☒
Fish and wildlife habitat	☒	☐	☐
Threatened/Endangered species/critical habitat	☒	☐	☐
Historic properties	☐	☐	☒
Floodplains	☐	☐	☒
Land use	☐	☐	☒
Navigation	☐	☐	☒
Noise levels	☒	☐	☐
Public infrastructure	☐	☐	☒
Socio-economics	☐	☐	☒
Environmental justice	☐	☐	☒
Soils	☐	☐	☒
Water quality	☒	☐	☐
Climate change	☐	☐	☒

All practicable and appropriate means to avoid or minimize adverse environmental effects were analyzed and incorporated into the recommended plan. Best management practices (BMPs) as detailed in the EA will be implemented, if appropriate, to minimize impacts. No compensatory mitigation is required as part of the recommended plan.

Pursuant to section 7 of the Endangered Species Act of 1973, as amended, the U.S. Army Corps of Engineers determined that the recommended plan will have no effect on federally listed species or their designated critical habitat, with the exception of the northern long eared bat (*Myotic septentrionalis*). A USFWS letter dated 01.June.2020 indicates that the proposed action may affect the northern long-eared bat in a manner "consistent with the activities analyzed in the Service's January 5, 2016, Programmatic Biological Opinion (PBO)." As such, "any take that may occur as a result of the Action is not prohibited under the ESA Section 4(d) rule adopted for this species at 50 CFR §17.40(o)."

Pursuant to section 106 of the National Historic Preservation Act of 1966, as amended, the U.S. Army Corps of Engineers determined that historic properties would not be adversely affected by the recommended plan. The Minnesota SHPO concurred with the determination on 28 May 2020**.**

Pursuant to the Clean Water Act of 1972, as amended, the discharge of dredged or fill material associated with the recommended plan has been found to be compliant with section 404(b)(1) Guidelines (40 CFR 230). The Clean Water Act Section 404(b)(1) Guidelines evaluation is found in Appendix G of the EA.

A water quality certification pursuant to section 401 of the Clean Water Act will obtained from the Minnesota Pollution Control Agency (MPCA) prior to construction. All conditions of the water quality certification will be implemented in order to minimize adverse impacts to water quality.

The USACE completed a federal consistency determination, pursuant to the Coastal Zone Management Act of 1972, and sent it to the State of Minnesota on 29 April 2020. The USACE determined that the project is consistent to the maximum extent practicable with the enforceable policies of the approved State of Minnesota Coastal Zone Management Program. All conditions of the consistency determination shall be implemented in order to minimize adverse impacts to the coastal zone.

All applicable environmental laws have been considered and coordination with appropriate agencies and officials has been completed. The project complies with Executive Order 11988, Flood Plain Management, because there is no practicable alternative to construction within the floodplain and the project would not promote floodplain development nor restrict floodplain capacity. Implementing the proposed actions would not result in significant cumulative or long-term adverse environmental effects, would cause no or insignificant minor adverse impacts to the waters of the United States and associated natural resources, will not result in the filling of special

aquatic sites or wetlands, will not adversely affect cultural resources, navigation, water quality, aquatic resources, aesthetics, scenic and recreation values, federally-listed endangered or threatened species and their habitat, nor be injurious to the public interest.

All applicable laws, executive orders, regulations, and local government plans were considered in evaluation of alternatives. Based on the preliminary conclusions of the EA and Section 404(b)(1) evaluation, it appears that the recommended plan would not cause significant adverse effects on the quality of the human environment; therefore, preparation of an Environmental Impact Statement will not be required.

Draft Environmental Assessment
Repair and Improvement of Duluth Vessel Yard

Executive Summary

Summary

The United States Army Corps of Engineers, Detroit District (USACE) Duluth Vessel Yard, located at 901 Minnesota Avenue, Duluth, MN 55802, is an industrial vessel yard used to support the USACE mission and operations of the Duluth Area Office (DuAO). The pier structures of the Vessel Yard have been found to be in poor condition and in danger of continued damage or failure that would negatively impact the operational capability of the DuAO. This Environmental Assessment has been prepared in accordance with the National Environmental Policy Act (NEPA) to document potential impacts to the human environment resulting from Federal actions and determine whether preparation of an Environmental Impact Statement is required.

Purpose and Need

The purpose of the proposed action is to repair and improve the Duluth Vessel Yard piers and seawall to meet current and future operational requirements of the USACE. The piers and seawall are currently in poor condition, with several voids present, or likely present, underneath the existing concrete apron capping the structures. Storm events have caused lateral movement of the North Pier and voids and sinkholes behind the face of the South Pier. Given the industrial nature of the site and use of large vehicles both on the piers and in the water, the Vessel Yard piers do not currently meet the operational requirements of the USACE. Without repairs, these structures may lose their integrity and require USACE to find alternate sites for operational needs.

Study Authority

The proposed repair and improvement of the Vessel Yard is authorized under general operations and maintenance authority for Duluth-Superior Harbor. This EA includes a Section 404(b)(1) Evaluation, pursuant to the Clean Water Act, for placement of fill

material into the waters of the United States and a Coastal Zone Management Act Federal Consistency Determination.

Alternatives

As required by §§ 102(2)(C)(iii) and 102(2)(E) of NEPA, a variety of alternatives were considered and included both no action and various designs based on feedback from Duluth Area Office (DuAO) personnel. Alternatives were assessed to narrow down all potential alternatives to those reasonable and capable of achieving the purpose and need of the project. These included:

1. **No Action** – No Federal action would be taken, allowing continued deterioration of the existing structures.
2. **Alternative 2** – In-Kind replacement of Piers.
3. **Alternative 3** – Encasing the existing piers in steel sheet pile (SSP) and a concrete cap.

The proposed action is Alternative 3, encasing the existing piers in SSP and a concrete cap.

Environmental Assessment Conclusions

This Environmental Assessment concludes that the Duluth Vessel Yard repair and improvement project:

a. Has no significant cumulative or long-term adverse environmental impacts associated with project actions;
b. Is not likely to adversely affect any Federal or State listed species or critical or significant habitat;
c. Will produce benefits that outweigh the minor, temporary impacts that may results, and;
d. Does not constitute a major Federal action significantly affecting the quality of the human environment.

Public Involvement & Comment

This Environmental Assessment will be made available to the USEPA, USFWS, MPCA, MNDNR, MN SHPO, Native American interests, City of Duluth, and other Federal, state, and local agencies, interested groups, and individuals. Following this period and a review of the comments received, a final determination will be made by the District Engineer regarding the necessity of preparing an Environmental Impact Statement (EIS) for the Duluth Vessel Yard repair and improvement project, Duluth, Minnesota.

Preliminary Environmental Impact Statement Determination

Based on the results of this Environmental Assessment, it appears that the recommended plan would not cause significant adverse effects on the quality of the human environment; therefore, preparation of an Environmental Impact Statement (EIS) will not be required. Therefore, a Preliminary Statement of Findings/Finding of No Significant Impact (SOF/FONSI) is included with this Environmental Assessment. If the District Engineer determines that an EIS is not necessary, the Preliminary SOF/FONSI would be finalized and environmental compliance for the proposed Duluth Vessel Yard repair and improvement project would be complete.

Table of Contents

Executive Summary 1
Summary 1
Purpose and Need 1
Study Authority 1
Alternatives 2
Environmental Assessment Conclusions 2
Public Involvement & Comment 3
Preliminary Environmental Impact Statement Determination 3
List of Tables 8
List of Figures 8
List of Appendices/Attachments 8
Acronyms and Abbreviations 9
1. Study Information 10
1.1 Study Authority 10
1.2 Scope 12
1.3 Purpose and Need 12
1.4 Study Area 13
2. Description of Alternatives 13
2.1 Alternatives Including Proposed Action 13
2.1.1 Alternative 1: No Action Alternative 13
2.1.2 Alternative 2: In-Kind Replacement of Piers 14
2.1.3 Alternative 3: Encasing the existing piers in steel sheet pile (SSP) and a concrete cap 14
2.2 Description of Proposed Action 15
2.2.1 Top of New SSP and Structure Elevation 15
2.2.2 Installation of new SSP Seawalls 16
2.2.3 Installation of Braces and Mooring Supports 16
2.2.4 Backfill of annulus between SSP structures 17

2.2.5 Removal and installation of cap block system 17
2.2.6 Installation of new exterior lighting 17
2.2.6.1 North Pier Lighting 18
2.2.6.2 South Pier Lighting 18
2.2.7 Installation of new power stations 19
2.2.7.1 North Pier Power Stations 19
2.2.7.2 South Pier Power Stations 19
3. Affected Environment and Environmental Consequences 20
3.1 Physical and Natural Resources 20
3.1.1 Fish and Wildlife 21
3.1.1.1 Rusty Patched Bumble Bee 22
3.1.1.2 Lake Chub 23
3.1.1.3 American Eel 25
3.1.1.4 Lake Sturgeon 26
3.1.1.5 Shortjaw Cisco 28
3.1.1.6 Common Tern 29
3.1.1.7 Piping Plover 31
3.1.1.8 Peregrine Falcon 32
3.1.1.9 Red Knot 34
3.1.1.10 Northern Long-eared Bat 34
3.1.1.11 Gray Wolf 36
3.1.1.12 Canada Lynx 37
3.1.1.13 Invertebrates 38
3.1.2 Water Quality 39
3.1.3 Vegetation 41
3.1.3.1 Terrestrial Vegetation 41
3.1.3.2 Wetland Vegetation 42
3.1.3.3 Aquatic Vegetation 42
3.1.4 Air Quality 43
3.1.5 Physical Features 43
3.2 Historic and Cultural Resources 44

3.3 Socioeconomic Resources 44
3.3.1 Economic resources 44
3.3.2 Recreation 45
3.3.3 Aesthetics and Noise 45
3.4 17 Points of Environmental Quality 45
3.4.1 Noise 45
3.4.2 Displacement of People 46
3.4.3 Aesthetic Values 46
3.4.4 Community Cohesion 46
3.4.5 Desirable Community Growth 46
3.4.6 Desirable Regional Growth 46
3.4.7 Tax Revenues 47
3.4.8 Property Values 47
3.4.9 Public Facilities 47
3.4.10 Public Services 48
3.4.11 Employment 48
3.4.12 Business and Industrial Activity 48
3.4.13 Displacement of Farms 48
3.4.14 Man-made Resources 49
3.4.15 Natural Resources 49
3.4.16 Air Quality 49
3.4.17 Water Quality 49
3.5 Resources considered but eliminated from consideration 50
3.5.1 Prime Farmland 50
3.5.2 Food and Fiber Production 50
3.5.3 Real Estate 50
3.6 Cumulative Effects 51
3.6.1 Cumulative Effects on Natural Resources 51
3.6.2 Cumulative Effects on Physical Resources 51
3.6.3 Cumulative Effects to Historic and Cultural Resources 52
3.6.4 Cumulative Effects Summary 52

4. Preliminary Agency Review 53
4.1 Agency coordination 53
4.2 Minnesota Pollution Control Agency 53
4.2.1 Comments of note 53
4.2.2 USACE Response 53
4.3 Minnesota Department of Natural Resources 54
4.3.1 Comments of note 54
4.3.2 USACE Response 54
5. Major Findings and Conclusions 54
5.1 Regulatory Framework 54
5.2 National Environmental Policy Act 55
5.3 Conclusions 55
6. Public Review 57
6.1 Dissemination of Environmental Assessment 57
6.2 Preliminary EIS Determination 57
Literature Cited 59

List of Tables

Table 1: Determination for all Federal and State listed species that may occur within or within 1 mile of the project area. 22
Table 2: Cumulative effects summary for the creation, maintenance, and operation of the Duluth Vessel Yard. 52

List of Figures

Figure 1: The USACE Duluth Vessel Yard, Duluth-Superior Harbor, and the Federal Navigation Channel 12

List of Appendices/Attachments

Appendix A: 65% Design Documentation Report
Appendix B: Pier Repair & Improvement Plan Drawings
Appendix C: Lighting Design Report
Appendix D: Lighting & Electrical Plan Drawings
Appendix E: USFWS IPaC Endangered Species Review Coordination
Appendix F: Section 404(b)(1) Evaluation
Appendix G: CZMA Federal Consistency Determination

Acronyms and Abbreviations

BMPs	Best Management Practices
CFR	Code of Federal Regulations
CWA	Clean Water Act
CZMA	Coastal Zone Management Act
DuAO	Duluth Area Office
DSPA	Duluth Seaway Port Authority
e-mail	Electronic Mail
EA	Environmental Assessment
EIS	Environmental Impact Statement
ER	Engineering Regulation
ESA	Endangered Species Act
fc	Footcandles
LWD	Low Water Datum, 601.1 feet; International Great Lakes Datum, 1955
MNDNR	Minnesota Department of Natural Resources
MOA	Memorandum of Agreement
MPCA	Minnesota Pollution Control Agency
NEPA	National Environmental Policy Act
NHIS	National Heritage Information System (of Minnesota)
NHPA	National Historic Preservation Act
OHWL	Ordinary High Water Level
PDT	Project Delivery Team
PL	Public Law
ROD	Record of Decision
SHPO	State Historic Preservation Office
UFC	Unified Facilities Criteria
USACE	United States Army Corps of Engineers
U.S.C.	United States Code
USEPA	United States Environmental Protection Agency
USFWS	United States Fish and Wildlife Service

1. Study Information

The U.S. Army Corps of Engineers (USACE), Detroit District, Duluth Vessel Yard is an active vessel yard and staging area for USACE operations conducted out of the Duluth Area Office (DuAO). It is located at 901 Minnesota Avenue, Duluth, Minnesota (Figure 1) and is listed on the National Register of Historic Places. The Vessel Yard consists of two piers (North and South), a headwall structure, and several buildings including a residence formerly used by the Vessel Yard Master (Figure 1). The Vessel Yard piers have been in the current configuration since the completion of the South Pier around 1926 and the Residence was constructed in 1941. Portions of both piers and the headwall have been reconstructed periodically, with the most recent construction taking place in 1975.

In August, 2019 a USACE geostructural engineer conducted a survey of the Duluth Vessel Yard facilities and determined that the Vessel Yard piers do not meet the operational requirements of the USACE and are at risk of further deterioration, including failure of the structures. Therefore, USACE, Detroit District is proposing repairs and improvements to the Duluth Vessel Yard. Said improvements would support current and future operations needs of the Duluth Area Office (DuAO) in addition to preserving this Historic Place.

1.1 Study Authority

The proposed repair and improvement of the Vessel Yard is authorized under general operations and maintenance authority for Duluth-Superior Harbor. The National Environmental Policy Act (NEPA) is a Federal Regulation to ensure that environmental information of the highest quality is available to both decision makers and the general public to best inform the impact of actions on the human environment before any actions are taken. This is intended to allow for decisions to be made in the context of environmental consequences of proposed actions as well as to identify specific actions that protect, restore, and/or enhance the environment (42 U.S.C. §§ 4321 *et seq.*). NEPA provides a process-based framework for Federal Agencies to analyze proposed

U.S. Army Corps of Engineers, Detroit District
477 Michigan Ave.
Detroit, MI 48226
313-226-6444

Coordinate System: NAD 1983 2011 StatePlane Minnesota North FIPS 2201 Ft US
Datum: NAD 1983 2011

Figure 1: The USACE Duluth Vessel Yard is located at 901 Minnesota Ave., approximately 0.2 miles south of the Duluth entrance to Duluth-Superior Harbor and to the east of the Federal Navigation Channel (green line). Inset – Duluth-Superior harbor, Federal Navigation Channel (green line), and Vessel Yard (red box). The vessel yard includes two piers (north – yellow hashed, south - pink hashed), a headwall (blue dotted), and Vessel Yard Master's Residence (Blue box, currently unoccupied). Most of the Vessel Yard is paved or impermeable surfaces with the exception of two small grassy areas (green hashed).

actions as well as identify and assess reasonable alternatives that will avoid, reduce, or mitigate adverse impacts on the human environment (42 U.S.C. §1500.2). The NEPA process was initiated by the Project Delivery Team (PDT) and it was determined that an Environmental Assessment (EA) was an appropriate level of analysis for the proposed project.

1.2 Scope

This EA will review the proposed Vessel Yard repairs and improvements, including but not limited to, environmental review as required under NEPA, the Coastal Zone Management Act (CZMA), Endangered Species Act (ESA), Clean Water Act (CWA), National Historic Preservation Act (NHPA), and applicable executive orders. This is in accordance with NEPA § 1502.25.

1.3 Purpose and Need

The August, 2019 survey of the Vessel Yard by a USACE geostructural engineer and found both piers to be in poor condition and several areas where voids are present, or likely present, under the concrete apron capping the structures. Storm events have caused lateral movement of the North Pier and voids and sinkholes behind the face of the South Pier. Several prior sinkholes behind the face of the South Pier have required more than 10 yards of material to fill. These observations and conditions are cause for concern given the industrial nature of the site and the use of large vehicles both on the piers and in the water. The proposed repair and improvements are necessary because the voids and storm damage have reduced the lateral support and stability of the piers. Future storm events, regular industrial use, or expansion of voids and sinkholes could ultimately collapse portions of both piers and the headwall structure. This would result in reduced operational capacity of the Vessel Yard, the need to secure alternate mooring sites for vessels (and associated costs), and a safety hazard to USACE personnel and equipment. Proposed repairs and improvements are designed to meet the current and

future operational needs of the DuAO and USACE mission, including the Duluth-Superior Federal Navigation Project (Appendix A).

1.4 Study Area

Duluth-Superior Harbor is formed by the waters of the St. Louis River and is the second largest tributary of Lake Superior. The Harbor is separated from Lake Superior by Minnesota Point and Wisconsin Point. These are natural sand and gravel barriers that extend over ten miles along the western end of Lake Superior. The USACE, Detroit District, Duluth Vessel Yard is located on Minnesota Point on the eastern side of the Superior Basin of Duluth-Superior Harbor approximately 0.2 miles south of the Duluth entrance (Figure 1, inset). The proposed Federal project will be contained within the Federal property limits of the Vessel Yard. The Vessel Yard's footprint is approximately 4.25 acres, of this approximately 2.3 acres is open water, 0.2 acres is the north pier, and 0.85 acres is the south pier. The existing seawall including both piers and the east headwall extends approximately 1,950 linear feet.

The existing pier and headwall structures generally consist of timber substructures and cribbing with granular infill capped with reinforced concrete cap blocks. The cap blocks are, in turn, supporting mooring bollards for the mooring of ships, barges, and floating plants. Battered piles/wooden struts are intermittently spaces to provide lateral support. Repairs and reconstruction efforts over time appear to have used Wakefield sheeting to supplement the original structures.

2. Description of Alternatives

2.1 Alternatives Including Proposed Action

2.1.1 Alternative 1: No Action Alternative

NEPA requires that each project include a "No Action" Alternative and that this alternative is carried through the entire process, receiving full consideration. This alternative assumes that no project would be implemented; all structures would be left in their current state and existing processes would continue. The No Action Alternative

helps to establish a “baseline” for the system to measure the impact that actions of all other alternatives would have, including cumulative impacts. In this case, the No Action Alternative will be no Federal Action. No repairs would be conducted and no improvements would be installed or constructed. Alternative 1 was not selected due to the extensive deterioration of the existing structures posing a safety risk to users and continued operations. Additionally, it is likely that excessive costs would be incurred to maintain operational activities of the DuAO without addressing the increasing safety risks.

2.1.2 Alternative 2: In-Kind Replacement of Piers

Alternative 2 would involve the replacement of the existing piers with new structures that have a similar design and footprint. This would involve the demolition and removal of existing structures, filling of any voids or sinkholes to low water datum (LWD 601.1 feet; International Great Lakes Datum, 1955), and then construction of new seawalls, supports, and concrete capping structures. Additional improvements would be installed as part of the replacement design. Alternative 2 was not selected due to the project mooring loads and a lack of confidence in the ability of soils below the existing structures to support new construction.

2.1.3 Alternative 3: Encasing the existing piers in steel sheet pile (SSP) and a concrete cap.

Alternative 3 involves constructing new steel sheet pile (SSP) seawalls surrounding the existing piers, backfilling any space between the new and old SSP walls, and then constructing a new concrete cap that extends to the limits of the new SSP seawall. Additional improvements would be installed during construction as part of the new pier design. Alternative 3 is the proposed action as this method would stabilize the existing (deteriorating) piers in-place, reduce the risk of compromising the stability of adjacent dock walls or structures during construction by leaving them in place, restore and stabilize the substrate under the piers, and reduce the amount of demolition and excavation necessary.

2.2 Description of Proposed Action

The major elements of the proposed action (Alternative 3) include:

a. Building new mooring bit foundations and seawalls using SSP (Appendix B, Sheet C-101);
b. Installing new utility conduits (Appendix D, Sheet E-101);
c. Backfilling areas within newly constructed seawalls (Appendix B, Sheet C-301);
d. Grading and placing an aggregate base for new parking areas and work yards (Appendix B, Sheet C-101);
e. Placing a concrete cap, concrete curbing, and fencing over the newly constructed piers (Appendix B, Sheet C-101), and;
f. Installation of light poles and fixtures (Appendix D, Sheet E-110).

2.2.1 Top of New SSP and Structure Elevation

The design is intended to provide an increased elevation compared to existing structures to allow for operational capacity to be maintained at higher lake levels and under greater wave conditions (Appendix A). Final elevations will vary, but will generally be:

1) North Pier
   a) North Side: +9 feet LWD – 2 feet above the current top of wall elevation, SSP only
   b) West Side: +5 feet LWD – 4 inches above current top of concrete cap elevation, Concrete cap will match SSP elevation
   c) South Side: +5 feet LWD – 4 inches above current top of concrete cap elevation, Concrete cap will match SSP elevation
2) East Headwall: +5.33 feet LWD - 4 inches above current top of concrete cap elevation, Concrete cap and SSP elevation only, finished concrete pavement surfaces will remain the same due to fixed grades
3) South Pier All Sides: +5 feet LWD – 16 inches above current top of concrete cap elevation, Concrete cap and SSP only, finished aggregate surface within the center of the pier will remain the same due to finished floor elevations.

2.2.2 Installation of new SSP Seawalls

Prior to installation of new seawalls, minor excavation would occur at the LWD to remove deleterious materials that would impact driving of new SPP. SSP seawalls will then be embedded 15 feet below the design dredge depth elevation (40 feet below LWD 561.6 IGLD 1985; Appendix B, Sheet C-301) according to engineering recommendations. The project will use 50 foot long sheets of PZC SSP. The SSP will be placed as much as three feet beyond the existing structure. This alignment is to prevent the existing structures from being damaged or becoming an obstruction while driving the SSP. It will also increase the operational width of the piers to meet future operational needs, where possible (Appendix B, Sheet C-101). USACE currently does not have an easement to cross the property line on the north side of the north pier beyond what can be considered “Navigational Servitude” for the portion extending beyond the harbor Ordinary High Water Level (OHWL, 603.1 feet). Therefore, the SSP location will be such that the outside face of the new SSP wall will be just inside (i.e. within 3 inches) of the USACE property line (Appendix B, Sheet C-101).

2.2.3 Installation of Braces and Mooring Supports

New SSP seawalls will be supported with newly installed tie rods, wales, and braces. The north pier will have cross-lot tie rods placed as regular intervals using a Grade 75 1-3/4” diameter rod (Appendix A). The west end of the north pier will be supported by micropile supported deadmen and internal bracing. Both the east headwall and south pier will have micropile supported deadmen supporting the SSP with tie rods.

Moring foundations will use a continuous strip footing extending along the length of the pier. This strip footing will be supported by regularly-spaced mooring posts. It is expected that mooring bollard locations will be determined in the field based on operational requirements, and the anchorages for the bollards would be installed during placement of the pile cap concrete.

2.2.4 Backfill of annulus between SSP structures

The space between the outside face of the existing structure and the rear face of the new SSP will be backfilled with clean open graded riprap up to the LWD (Appendix B, Sheet C-301). This will help to stabilize existing structures and substrate. MnDOT Class 1 riprap has been selected as the proposed infill material. This material will then be capped using MnDOT 5Q aggregate to provide a working surface for the construction of concrete pavements, structural slabs, and foundations.

2.2.5 Removal and installation of cap block system

The existing cap block system will then be removed in its entirety over the piers and the cab blocks and ~25 lineal feet of the concrete pavements will be removed over the east headwall (Appendix B, Sheets CD101 and CD301). If any support systems or substrate is disturbed during removal of the concrete cap blocks, minor excavation will occur to remove these deleterious materials. This excavation may extend as deep as 1-2 feet below LWD. Additionally, on the south pier some existing PZ27 SSP at the southeast corner of the property will also be removed (Appendix B, Sheet CD101). The north pier will have a concrete structural slab installed and the east headwall and sour pier will have a reinforced concrete cap installed to the elevations indicated in Section 2.2.1 (dependent on the elevation of the SSP).

2.2.6 Installation of new exterior lighting

Existing light poles will be demolished and removed and new light poles and light fixtures will be installed on both piers in accordance with Unified Facilities Criteria (UFC) 4-150-02 and City of Duluth Zoning regulations for Mixed Use-Waterfront properties and Exterior Lighting regulation 50-31.1. These criteria establish a narrow range of acceptable light levels, between 5 and 10 footcandles (fc) of illumination, for a property of this type (Appendix C). The City of Duluth regulations also limit the height of any new light fixture poles of a maximum of 25 feet tall. To limit the impact on areas surrounding the Vessel Yard lights with lower Kelvin color temperatures will be used for fixtures facing the edges of the piers and water surface (Appendix C). All lights will be photocell

controlled to activate when ambient light levels fall below a safe threshold for work on the piers.

2.2.6.1 North Pier Lighting

The North Pier will have the number of light poles increased from four (current) to six. Each pole will have a single fixture of approximately 18k lumens facing towards the South Pier with a Backlight Control distribution pattern to limit light pollution on the non-working side of the pier (north of the pier). This configuration will provide an average illumination of 4.7 fc along the surface of the pier and a maximum/minimum ratio of 5.3:1 (Appendix C, Figure 4). Compared to current conditions (average 3.1 fc, max/min 1110:1; Appendix C, Figure 3), this represents an increase in the average illumination and a decrease in the max/min ratio.

Along the northern edge of the pier, the illumination falls below the 1fc limit required by zoning regulations. Along the southern edge of the pier, light does extend out past the edge of the pier and illumination levels were modelled to hit a water surface at an elevation of +2.9 LWD. The proposed lighting would fall below 1 fc at a distance of 30 feet from the edge of the pier at (Appendix C, Figure 4). Within this 30 foot area parallel to the southern edge of the North Pier, the proposed lighting would have an average illumination of 4.7fc with a maximum illumination of 6.8fc.

2.2.6.2 South Pier Lighting

The South Pier will have eight new light poles installed. Currently all light sources are wall-mounts on existing buildings or pole-mounted spot lights illuminating ship berths and power stations (Appendix C, Figure 3). Six of the new poles will have two light fixtures on them, one fixture facing the interior and one the exterior, both with backlight control distributions. The remaining two new poles will be on the end of the pier and have a single fixture with a corner cutoff light distribution on them facing towards the interior of the pier. The interior facing lights will have an illumination of approximately 35k lumens and the exterior lights will be approximately 18k lumens.

This lighting configuration will average 7.4 fc over a majority of the pier, with the top of the pier structures having an illumination of 5 fc along the north and south sides, but not the western end. The new configuration will also reduce the max/min ratio so that it is in compliance with the City zoning regulations (Appendix C).

2.2.7 Installation of new power stations

The proposed actions will also include the demolition of existing power stations and electrical conduits and the installation of new power stations for connecting vessels to shore based power on both the North and South Piers. Power stations will be connected to transformers through newly conduit installed beneath the pier work surface (Appendix D, Sheet E-101).

2.2.7.1 North Pier Power Stations

The North Pier will have 2 new power stations installed approximately equidistant along the southern edge of the pier (Appendix D, Sheet E-110). Each power station will have a wall mounted light to illuminate the electrical equipment. Simulations did not show an increase in light intensity on the water surface adjacent to the power stations as a result of the power station wall mounted lights. These power stations will require the installation of a new service transformer, lighting control, and main distribution panel which will be located on the landward side of the pier outside of the existing fence adjacent to the Vessel Yard Residence (Appendix D, Sheet E-101).

2.2.7.2 South Pier Power Stations

The South Pier will have six power stations installed or improved around the perimeter, three on the north side and three on the south (Appendix D, Sheet E-110). On the north side of the pier, two power stations will be located against existing buildings and the third will be near to the edge of the pier. On the south side all three power stations will be located away from buildings along the edge of the pier. Power stations located away from buildings will have low intensity spot lights mounted on 10 foot poles to eliminate any shadows along the edge of the pier that would be caused by the power station (Appendix D, Sheet E-110). Power stations located adjacent to buildings will rely on

existing exterior building lighting. Simulations did not show an increase in light intensity on the water surface adjacent to the power stations as a result of the pole mounted spot lights.

3. Affected Environment and Environmental Consequences

3.1 Physical and Natural Resources

Project operations would not result in significant adverse effects on fish and wildlife or habitat. The construction areas would be within the waters around the existing piers and headwall and on top of the piers themselves. These structures currently serve as an industrial slip and work area for the DuAO. Following completion of the proposed repairs and improvements, activities in the Vessel Yard would be similar in scope and nature to those that currently occur as part of existing operations.

Aquatic habitat around the piers is limited to the timber crib structures which are deteriorating. These areas would be replaced with SSP walls back-filled as described in Section 2.2. As such the proposed actions would reduce the total area of habitat available and potentially reduce the complexity of potential habitat, however any complexity will have resulted from deterioration of the existing structures and therefore not have been a component of said structures at the time of their construction. The aquatic area within the Federal property line is approximately 2.3 acres and construction activity will have a direct impact on <1 acre, surrounding the existing pier structures. However, even if the entirety of the aquatic area were to be impacted this would represent ~0.02% (2 hundredths of a percent) of the total area of the St. Louis River Estuary. Following project completion, the Vessel Yard would still provide aquatic habitat for benthic and sessile organisms and feeding areas for fish.

Terrestrial habitat in the Vessel Yard is limited and minimal in terms of diversity and structure. Most of the vessel yard is un-vegetated, being covered by buildings, impermeable parking areas, and concrete work yards. There are two areas on the

corners of the landward side of the property along Minnesota Ave. that are sparsely vegetated with grass and a few trees (Figure 1, green hashed boxes). The northern corner is approximately 8,000 square feet and currently has the former Vessel Yard Residence on it which is going to be converted into additional parking/impermeable surface (in accordance with historic preservation agreements). The southern corner is approximately 2,000 square feet. Combined, the terrestrial habitat available at the Vessel Yard is subject to regular disturbance and disruption due to the industrial activities occurring within, and supported by, the Vessel Yard. The proposed project actions would directly and indirectly impact terrestrial organisms, but these impacts would be temporary and limited to construction areas, staging areas, and vehicle pathways.

3.1.1 Fish and Wildlife

The St. Louis River estuary is an approximately 12,000 acre freshwater estuary that provides habitat to a variety of fish species, including multiple species of shiners (*Luxilus* spp. and *Notropis* spp.), bullhead (*Ameirus* spp.), bass (*Micropterus* spp. and *Ambloplites rupestris*), sunfishes (*Lepomis* spp. and *Pomoxis nigromaculatus*), redhorse (*Moxostoma* spp.), and native species such as American eel (*Anguilla rostrata*), walleye (*Sander vitreus*), muskellunge (*Esox masquinongy*), lake chub (*Couesius plumbeus*), lake sturgeon (*Acipenser fulvescens*), and northern pike (*Esox lucius*). Many of these species are important game species for both commercial and recreational fisheries and the lake sturgeon, walleye, and muskellunge specifically are species of focus for the removal of the fish consumption advisory for the Great Lakes Area of Concern Beneficial Use Impairment 2.

No known Federally Threatened or Endangered species are found within the Vessel Yard. A survey of the USFWS Information for Planning and Consultation (IPaC) system (Appendix E) and the Minnesota National Heritage Information System (NHIS) identified twelve federal or state listed species that could occur within or near to the project area (Table 1). The impacts to these species are discussed below.

Species	Common Name	Listing‡	Determination†
Bombus affinis	Rusty Patched Bumble Bee	FME	NE
Couesius plumbeus	Lake Chub	MSSC	MA-NLAA
Anguilla rostrata	American Eel	MSSC	MA-NLAA
Acipenser fulvescens	Lake Sturgeon	MSSC	MA-NLAA
Coregonus zenithicus	Shortjaw Cisco	MSSC	NE
Sterna hirundo	Common Tern	MT	MA-NLAA
Charadrius melodus	Piping Plover	FME	NE
Falco peregrinus	Peregrine Falcon	MSSC	NE
Calidris canutus rufa	Red Knot	FT	NE
Myotis septentrionalis	Northern Long-eared bat	FT/MSSC	MA-NLAA
Canis lupus	Gray Wolf	FT	NE
Lynx canadensis	Canada Lynx	FT/MSSC	NE

Table 1: Determination for all Federal and State listed species that may occur within or within 1 mile of the project area. ‡: FME – Federal and Minnesota Listed Endangered; MT – Minnesota Listed Threatened; MSSC – Minnesota Species of Special Concern. †: NE – No Effect; MA-NLAA – May Affect, not likely to adversely affect.

3.1.1.1 Rusty Patched Bumble Bee

The Rusty Patched Bumble Bee (*Bombus affinis*) prefers grasslands and tallgrass prairies of the Upper Midwest (USFWS, 2019). These sites need to include abandoned underground rodent cavities or clumps of grasses for nests and an overwintering site for hibernating queens. Sites should have access to flowers to provide food for the bees. Due to human activities, most grasslands and prairies have been converted (farmland, cities, roads), fragmented, and/or significantly reduced in size.

There is a single observation of the Rusty Patched Bumble Bee in the Duluth-Superior area from 1913. The specific location of this observation is not specified therefore the potential area encompasses the land surrounding the St. Louis River Estuary. The United States Fish and Wildlife Service (USFWS) Midwest Region Rusty Patched Bumble Bee map (USFWS, 2020) indicates that no observations or collections have occurred in the project area or surroundings since before the year 2000. The USFWS map further indicates that the closest area where the Rusty Patched Bumble Bee is likely present is west of the city of Cloquet, MN, a distance of approximately 20 miles from the project area. As such, the Rusty Patched Bumble Bee is not expected to be

found in the project area and surrounding environment. Further, the USFWS does not require additional coordination under Section 7 of the ESA.

The project actions will not directly impact any Rusty Patched Bumble Bees as none should be found in the Duluth Vessel Yard or in water where work is to be performed. The project area is surrounded by industrial and commercial developments and located within the highly urbanized the St. Louis River Estuary which has reduced available habitat for the Rusty Patched Bumble Bee. The project will not have an impact of the occurrence or health of native species or habitat that could support nesting or feeding bees.

The Rusty Patched Bumble Bee was federally listed as endangered on 11.January.2017 wherever it is found. No critical habitat was designated, or has been designated for the Rusty Patched Bumble Bee. As an endangered species, the Rusty Patched Bumble Bee is managed under Minnesota Statutes, section §84.0895 and associated rules (Minnesota Rules, part 6212.1800 to 6212.2300 and 6134). The determination for the Rusty Patched Bumble Bee, a Federal Endangered Species and a Minnesota Rare Feature is based on the following rationale:

1. The Rusty Patched Bumble Bee is not likely to occur in the project area, and;
2. Project actions should not directly or indirectly impact individuals, nests, and overwintering habitat.

Given the current distribution of these bees in Minnesota, it is not likely that bees are currently present within the project area. It is equally unlikely that they would re-colonize the project area following project actions. As such, the determination for the proposed project is "**No Effect**" on the Rusty Patched Bumble Bee.

3.1.1.2 Lake Chub

The Lake Chub (*Couesius plumbeus*) is a minnow with the most northward distribution of any minnow in North America. In Minnesota, the Lake Chub is found within the

nearshore portions of Lake Superior, primarily in stream mouths and areas with sand and scattered boulders. The Lake Chub is found throughout the St. Louis River Estuary and may even spawn in shallow areas. The Duluth Vessel Yard is relatively deep to provide clearance for larger vessels but does have a sandy organic silt benthos that could be habitat for Lake Chub. However, the higher percentage of fine material in the benthos, lack of boulders, and regular dredging to maintain operational depth in the Vessel Yard likely mean that this is not a primary habitat.

The Lake Chub was last observed in the St. Louis River Estuary in 2016 but is believed to be extant throughout the estuary and Lake Superior. Different populations of Lake Chub throughout Minnesota are potentially isolated and morphologically distinct from one another, including the population in the St. Louis River Estuary (Hatch and Schmidt, in prep.).

Direct impacts to the Lake Chub due to project actions include potential mortality and displacement from dredging equipment and SSP installation, and reduced feeding success due to increased turbidity. Since Lake Chub are mobile, their primary reaction to these activities will be avoidance of the project area, which will minimize the impact to their population.

The installation SSP will likely occur over multiple construction seasons, which could directly impact any potential spawning of Lake Chub that would occur within the Vessel Yard during that particular construction season. Spawning typically occurs in mid-June and early July; it is likely that construction would already be underway when spawning would begin so Lake Chub avoidance of the Vessel Yard would result in a small reduction in available spawning habitat.

The Lake Chub is a Minnesota Species of Special Concern due to indicators that the species range is shifting northward and that few species in the state are stable. It is considered a rare feature in the state. As such, the determination for the Lake Chub is based on the following rationale:

1. The Lake Chub is likely to occur in the project area;
2. Project actions could have direct impacts on individuals and spawning habitat, and;
3. Lake Chub are mobile and do not have designated critical habitat in the St. Louis River Estuary.

It is likely that Lake Chub occur in the project area and will be directly impacted by the project actions. However, the mobility of Lake Chub and the fact that project operations are set to begin before the time typical for spawning in the species, will limit these impacts. It is equally likely that Lake Chub will return to the project area follow project completion. As such, the determination for the proposed project is "**May Affect, but Not Likely to Adversely Affect**" the Lake Chub.

3.1.1.3 American Eel

As a catadromus species, the American Eel (*Anguilla rostrata*) spawns in the Sargasso Sea and then migrates into freshwater bodies as they mature. They spend their adult life in the freshwater systems before migrating back to the Sargasso Sea to spawn and die. The American Eel was likely introduced to Lake Superior, and the St. Louis River Estuary, through the construction of the Welland Canal to bypass Niagara Falls or the Ship Canal to connect the Mississippi Drainage to the Great Lakes. In the St. Louis River Estuary, the American Eel is likely to be found in areas with continuous flow, a mud or rock bottom, and daytime cover such as submerged logs, boulders, or manmade structures.

Given the expansive range and ties to development and life history of the American Eel, it is difficult to specify the variables required, or contributing to, migration to and survival in freshwater systems such as the St. Louis River Estuary. What is known is that all eels in the St. Louis River Estuary are female, and therefore this does not constitute a breeding population. Observations of the American Eel have been declining, with the

most recent observation being one individual collected in 2010. The population is still considered extant in the St. Louis River Estuary.

Direct impacts to the American Eel due to project actions include potential mortality and displacement from dredging equipment and SSP installation. Since the eels are mobile, their primary reaction to these activities will be avoidance of the project area, which will minimize the impact to their population.

The American eel is a Minnesota Species of Special Concern due the decline in the abundance of eels in Minnesota waters. The determination for the American Eel is based on the following rationale:

1. The American Eel has a historical occurrence in the project area;
2. Project actions could have direct and indirect impacts on individuals, and feeding habitat, and;
3. American Eels are mobile and do not have designated critical habitat in the St. Louis River Estuary.

It is possible that American Eels occur in the project area and will be directly impacted by the project actions. The mobility of eels and their nocturnal feeding activity will reduce any impacts that may occur during active construction. As such, the determination for the proposed project is "**May Affect, but Not Likely to Adversely Affect**" the American Eel.

3.1.1.4 Lake Sturgeon

The Lake Sturgeon (*Acipenser fulvescens*) is found throughout Minnesota year round, with adults preferring clear, large water bodies with sand, gravel, or rubble substrate on the bottom. Adults prefer deeper waters (>5 feet deep) but will venture into shallow waters for feeding or spawning. In the St. Louis River Estuary, lake sturgeon have been observed to spawn upriver within raceways and near the river margins (Schram et al., 1999).

Lake sturgeon are found throughout the St. Louis River Estuary and Lake Superior. From 1980-2000 lake sturgeon were reintroduced into the estuary and in 2009 spawning habitat near the Fond Du Lac Dam was restored. The Lake Superior population of Lake Sturgeon is now considered to be self-sustaining and sturgeon of multiple ages and year classes are found throughout the Estuary. The last confirmed observation of a lake sturgeon occurred in 2002 outside of the project site. Acoustic transmitter data from transmitters surgically implanted in sturgeon indicate that sturgeon passed through the Duluth Harbor entrance in 2018 and travel throughout the estuary (Estep, 2019).

Lake sturgeon may be directly impacted due to project actions, including potential mortality from interactions with dredging and SSP installation equipment and activities, and reduced feeding success due to removal of benthic prey via dredging. Since lake sturgeon are mobile, their primary reaction to these activities will be avoidance of the project area, which will minimize the impact to their population.

Indirect effects may include increased turbidity outside of the project area. Increases in turbidity could negatively impact, short-term, sturgeon foraging in nearby areas through the settling and burial of prey organisms.

The lake sturgeon is a Minnesota Species of Special Concern due to previous extirpation or reduction in the range and population of sturgeon throughout Minnesota. The determination for the lake sturgeon is based on the following rationale:

1. The lake sturgeon is likely to occur in the project area;
2. Project actions could have direct and indirect impacts on individuals and their prey, and;
3. Lake sturgeon are mobile and do not have designated critical habitat in the project area.

It is likely that lake sturgeon will occur in the project area and will be directly impacted by the project actions. However, the mobility of sturgeon and the fact that project operations would likely begin near the time typical for spawning in the species, reduces the likelihood that sturgeon would be present, or remain, in the project area during operations. It is also likely that lake sturgeon will return to the project area following project actions. As such, the determination for the proposed project is "**May Affect, but Not Likely to Adversely Affect**" the Lake Sturgeon.

3.1.1.5 Shortjaw Cisco

The shortjaw cisco (*Coregonus zenithicus*) is a deep, open water species native to Lake Superior. Shortjaw cisco migrate around the lake based on the depth; from 360-472 ft. in spring to 180-233 ft. in summer, and 240-295 ft. in winter (Scott and Crossman, 1973). Spawning is likely to occur in the shallower end of the shortjaw ciscos' range (121-240 ft.) in areas with a clay bottom (Becker, 1983).

A combination of overfishing, predation by the parasitic sea lamprey, and competition with introduced and invasive species have significantly reduced the abundance of shortjaw cisco in Lake Superior. A targeted population assessment of shortjaw cisco in Lake Superior conducted between 1999 and 2001 observed individuals in four out of five areas sampled but abundances were so low they were mathematically considered to be zero (Hoff and Todd, 2004). Near to the project area, two shortjaw ciscoes were last observed in 2009 in Lake Superior, northwest of the Duluth breakwater and harbor entrance.

Shortjaw cisco are unlikely to occur within Duluth-Superior harbor, and therefore are not likely to be impacted directly or indirectly by the project actions. If any were to be in the project area, their mobility would allow them leave and avoid the project area, minimizing any potential impact.

Due to their documented population decline, the shortjaw cisco is a Minnesota Species of Special Concern. The determination for the shortjaw cisco is based on the following rationale:

1. The shortjaw cisco is unlikely to occur in the project area;
2. Project actions are not likely to have direct or indirect impacts on individuals, their prey, or their habitat, and;
3. Shortjaw cisco are mobile and do not have designated critical habitat in the project area.

There are no reports of shortjaw cisco in Duluth-Superior harbor, combined with their preference for water more than 50 ft. deep make it highly unlikely that any shortjaw ciscos would be in the project area. Any that were to occur would be capable of swimming out of and away from the project area to avoid any impacts. As such, the determination for shortjaw cisco is "**No Effect.**"

3.1.1.6 Common Tern

The common tern (*Sterna hirundo*) is a piscivore that nests in large colonies, typically on isolated and sparsely vegetated islands. Edges of water bodies with sandy or gravelly beaches are also occasionally used. Common terns nest on the ground, so sites that have stable or receding water levels during nesting are required. Physical barriers, such as water, and open sight lines for observation and communication within the colony help to reduce predation. Nesting near water bodies also ensures a steady supply of food.

The St. Louis River Estuary is one of six primary breeding areas for the common tern in Minnesota. Interstate Island, approximately 1.8 miles from the project area, is the closest active nesting colony. Historically, common tern were observed nesting at both Hearding Island and the Duluth Port terminal, each ~1 mile away. Positive nesting at either of these sites has not been observed since 1988.

The project actions will not have a direct impact on common terns, as the Vessel Yard is not a nesting site (lacking sandy and gravelly beaches), not large enough to accommodate typical tern fishing behavior, and experiences industrial activity that would disrupt typical behaviors.

Indirect effects will include temporary increases in turbidity and noise generated from project activities. Increases in turbidity may decrease hunting success in waters near the project area, but this impact will be temporary and terns will be able to hunt in non-impacted areas. Noise from project activities may disrupt nesting, but no active nests are within 1 mile of the project area. The largest active colony is Interstate Island approximately 1.8 miles away so noise levels at this colony should be minimal.

The common tern is listed as threatened in the State of Minnesota. Threatened species are managed under Minnesota Statutes, section §84.0895 and associated rules (Minnesota Rules, part 6212.1800 to 6212.2300 and 6134) that prohibit the taking of threatened species without a permit. The determination for the common tern is based on the following rationale:

1. Common tern have a historical occurrence near the project area;
2. Nesting and rearing of chicks has historically occurred near the project area;
3. The St. Louis River Estuary is considered a primary breeding site for common tern;
4. Project actions will not directly impact common tern or common tern nesting colonies, and;
5. The project actions would not result in any changes in land use that would impact the common tern.

As such, the determination for the common tern is "**May Affect, but Not Likely to Adversely Affect**."

3.1.1.7 Piping Plover

Piping plover (*Charadrius melodus*) are migratory shorebirds that nest in northern breeding grounds in the spring on sandy beaches. Plover typically use beaches with sand, gravel, and pebble substrate, and little to no vegetation. Open, sandy beach habitat is limited in the St. Louis River Estuary due to urban growth, industrialization, erosion, and high water levels. Plover are in competition for use of the remaining habitat with other shorebirds, such as gulls, and humans who recreationally use sandy beaches and can disturb nesting and nests. In 2001, the USFWS designated Interstate Island in the St. Louis River Estuary as critical habitat for the piping plover. This island is approximately 1.8 miles southwest of the project area.

Plover are annually observed in the St. Louis River Estuary, with reports of individual birds at Schafer Beach, Minnesota Point, and the Wisconsin Point Bird Sanctuary. These sightings have not included any nesting behaviors. The last observation of a plover nest was the year 2000. Due to their nesting behavior, plover are highly susceptible to predation, which negatively impacts the population. Combined with the factors limiting available nesting habitat, there is only a small population in the St. Louis River Estuary with limited opportunity for recovery.

The Vessel Yard and surrounding area does not contain piping plover habitat or nesting habitat. There are small sandy beaches adjacent to the Vessel Yard and limited to no areas with coarse substrate such as gravel or cobble. As such, it is highly unlikely that the small number of plover in the estuary would utilize the project area in any capacity. Direct effects to plover will therefore be limited to nonexistent.

Plover may be indirectly impacted by noise generated through construction operations. The last plover observed near the project site was seen at Hearding Island in 2000. The distance between the Vessel Yard and Hearding Island is such that indirect impacts would be minimal to any plover at that location.

The piping plover was designated an endangered species in Minnesota in 1984. The following year, on 11.December.1985, the plover was added to the Federal Endangered Species List. Critical habitat for this species in the Great Lakes, including Minnesota and Wisconsin, was designated on 7.May.2011. As such, the piping plover is managed under the authority of the Federal Endangered Species Act of 1973 (ESA; PL 93-205, as amended) as well Minnesota Statutes, section §84.0895 and associated rules (Minnesota Rules, part 6212.1800 to 6212.2300 and 6134). The determination for this Minnesota Rare Feature is based on the following rationale:

1. The project area is an industrial vessel yard and does not meet any habitat requirement of piping plover (i.e. sandy beach, gravel or pebble substrate, little or no vegetation);
2. The project location is outside of designated critical habitat for piping plover in the St. Louis River Estuary;
3. No piping plover has been observed in or near the project area since the year 2000, and;
4. The project objectives will not result in the modification or creation of piping plover habitat.

Furthermore, other areas of the Duluth-Superior Harbor have suitable habitat, or have been the target for habitat restoration with Piping Plover in mind. As such, the determination with respect to piping plover is "**No Effect**."

3.1.1.8 Peregrine Falcon

The Peregrine Falcon (*Falco peregrinus*) nests in high, flat surfaces such as building and bridge ledges and eyries on cliffs. Peregrine Falcons typically prefer non-forested areas due to their hunting strategy of mid-flight pursuit and capture of birds. The St. Louis River Estuary provides both open, non-forested hunting areas (over the water), and ample high, flat locations on buildings and bridges for nesting. Nesting habitat in Minnesota is also where chicks are hatched and fledged. Some peregrine falcons

migrate south for the winter, but there are observations of falcons remaining in Minnesota over the winter.

The number of peregrine falcons in Minnesota has been steadily increasing since being listed as Federally endangered in 1984. As of 2015, 70 breeding pairs produced 145 chicks in the state of Minnesota. Peregrine falcons were last observed nesting in Greysolon Plaza, approximately 1 mile north of the Vessel Yard, in 2009.

The project actions will have limited direct effects on peregrine falcons that may occur near the project site. Work will primarily occur in the water, but the construction equipment and newly installed light poles could be a hazard to falcons during flight. The light poles in particular will provide perches for use by falcons (and their prey) to hunt from and potentially even nest. Indirect effects to falcons include disturbance of nesting and rearing due to noise and avoidance of the project area by prey species. Combined, the project actions could positively impact the future success of peregrine falcon nesting or hunting in the St. Louis River Estuary by providing additional perches for both activities through the installation of new light poles in the Vessel Yard.

The peregrine falcon was previously listed as a Federal and state endangered species. Due to recovery of the population, the status of the falcon was changed from endangered to threatened at the state level in 1996, it was federally delisted in 1999, and was changed from threatened to special concern in 2013. It is currently listed as a Minnesota Species of Special Concern. The determination for the peregrine falcon is based on the following rationale:

1. Peregrine falcons have a historical occurrence near the project area;
2. Nesting and rearing of chicks has historically occurred near the project area;
3. Peregrine falcons do not have designated critical habitat in the St. Louis River Estuary, and;
4. Project actions will provide new potential falcon habitat.

As such, the determination for the peregrine falcon is "**May Affect, but Not Likely to Adversely Affect**."

3.1.1.9 Red Knot

The Red Knot (*Calidris canutus rufa*, AKA Rufa Red Knot) is a migratory bird that may stopover on the shores of large lakes, such as Lake Superior. These stopovers would be shore in duration and involve feeding and resting before continuing on to their final destination. Therefore, any Red Knot in the St. Louis River Estuary would only be present on a seasonal basis for a short time frame.

This species does not have designated critical habitat. In Duluth, the red knot is typically seen at Park Point, near larger inland lakeshores, and at sewage treatment plants. Recent reports usually note 1-2 birds in the Duluth area, so it is unlikely that Red Knot would be present in the Project Area, if present at all in the Duluth-Superior Harbor.

The Red Knot was Federally listed as Threatened wherever found on 12.January.2015. It is not listed in the State of Minnesota. The determination for the Red Knot is based on the following rationale:

1. Red Knots have been observed in the Duluth Area near to the project site;
2. The St. Louis River Estuary only serves as stopover habitat on a seasonal basis;
3. Red Knots do not have designated critical habitat in the St. Louis River Estuary, and;
4. Project actions would not result in any impacts to Red Knot habitat or food.

Due to this rationale, the determination for the Red Knot is "**No Effect**."

3.1.1.10 Northern Long-eared Bat

The Northern Long-eared Bat (*Myotis septentrionalis*) is a medium-sized bat that hibernates overwinter (approximately August through May) and then emerges to forage for insects over water during the remainder of the year. When not hibernating, the

northern long-eared bat will roost in large trees with loose bark or cracks and crevices. On rare occasions northern long-eared bats will roost in structures that have cracks and crevices that mimic those on trees (barns, sheds, etc.).

Northern long-eared bats may be directly impacted due to project actions, including interactions with equipment and newly installed light poles while foraging and flying. Since bats are mobile, their primary reaction to these activities will be avoidance of the project area or equipment, which will minimize the impact to their population. No trees are going to be cut and no buildings changed as a result of project actions, which will not impact the roosting availability or behavior within or near to the Vessel Yard.

Indirect effects may include impacts to foraging success positively, negatively, or a combination. Prey insects may be attracted by the increase in ambient lighting from the installation of new light fixtures, which could concentrate prey and increase foraging success. The increase in light may also allow for insects to better avoid predation, reducing foraging success near to the Vessel Yard. Both of these impacts could occur simultaneously, resulting in no significant change in foraging success.

The northern long-eared bat was Federally listed as Threatened on 04.May.2015 wherever found. It is also listed in the State of Minnesota as a Species of Special Concern. The determination for the Northern Long-eared bat is based on the following rationale:

1. No know hibernacula (locations where bats hibernate) occur near to the project site;
2. There is no designated critical habitat for the Northern Long-eared Bat;
3. No trees will be cut as a result of project actions;
4. New light fixtures will be installed that will increase ambient light within the Vessel Yard;
5. New light poles will be installed, and;
6. Bats are mobile and capable of avoiding objects and equipment.

As such, the determination for the Northern Long-eared Bat is "**May affect, not likely to adversely affect**" (Appendix E).

3.1.1.11 Gray Wolf

The Gray Wolf (*Canis lupus*) is a keystone predator that can travel alone or in packs in a variety of habitats throughout North America, including temperate forests and grasslands. Within Minnesota there is designated critical habitat for the gray wolf in the north and northeast, including St. Louis County. The designated critical habitat does not extend into the City of Duluth. The 2017-2018 winter wolf survey conducted in Minnesota did not observe any wolves in the project or surrounding areas and further indicated that the City of Duluth was not an occupied pack range.

Due to the urban location of the Duluth Vessel Yard, and the security measures of the property, including a chain link fence, it is highly unlikely that there are any wolves or prey present at the project site or on the peninsula of Minnesota Point. As such, it is not anticipate that there will be any direct or indirect impacts to the gray wolf. As wolves are mobile, they would be capable of avoiding or leaving the project area which would further reduce any possible impacts.

The gray wolf was listed as Endangered in 1967. On 03.March.1978, this listing was amended, with the Minnesota population having its status changed to Threatened. The State of Minnesota were originally listed as a State Threatened species in 1984. Recovery of the population led to a reclassification as a State Species of Special concern in 1996, and then delisting in 2013. The determination for the Gray Wolf is based on the following rationale:

1. Critical habitat for the Gray Wolf has been designated in St. Louis County;
2. The City of Duluth and location of the Duluth Vessel Yard is not within the designated critical habitat for the Gray Wolf;

3. The urban environment and presence of physical barriers surrounding the project site should prevent any Gray Wolves, or their prey, from entering the project area, and;
4. Gray Wolves are mobile organisms that would likely avoid or leave the project area.

As such, the determination for the Gray Wolf is "**No Effect**."

3.1.1.12 Canada Lynx

The Canada Lynx (*Lynx canadensis*) is found throughout Canada and Alaska, with the southern edge of its range extending into the United States, including the northern Great Lakes. Their primary habitat are boreal forests with a coniferous component. Forests of this type are patchy in Minnesota and often interspersed with northern hardwood forests. In addition to its primary habitat, the distribution of Canada lynx is closely tied to that of its primary prey, the Showshoe Hare (*Lepus americanus*). Within Minnesota there is a resident population that interacts with a more migratory population coming from Canada and likely following populations of Showshoe hare. As the prey population fluctuates, the lynx population also fluctuates, including the abundance of migrants from Canada.

There is designated critical habitat for the Canada lynx in the State of Minnesota, including St. Louis County extending from the U.S.-Canada border all the way to Interstate I-35, just north of the project site. As such, there is a possibility for direct impacts due to the project actions. However, due to the urban location of the Duluth Vessel Yard, and the security measures of the property, including a chain link fence, it is highly unlikely that there are any lynx or prey present at the project site or on the peninsula of Minnesota Point. As such, it is not anticipate that there will be any direct or indirect impacts to the Canada lynx. As lynx are mobile, they would be capable of avoiding or leaving the project area which would further reduce any possible impacts.

The Canada Lynx was listed as Threatened on 24.March.2000 wherever found. The State of Minnesota listed this as a Species of Special Concern in 2013. The determination for the Canada Lynx is based on the following rationale:

1. Critical habitat for the Canada Lynx has been designated in St. Louis County;
2. The Duluth Vessel Yard is not within the designated critical habitat for the Canada Lynx;
3. The urban environment and presence of physical barriers surrounding the project site should prevent any Canada Lynx, or their prey, from entering the project area, and;
4. Canada Lynx are mobile organisms that would likely avoid or leave the project area.

As such, the determination for the Canada Lynx is "**No Effect**."

3.1.1.13 Invertebrates

Invertebrates include terrestrial and aquatic insects and planktonic (free-floating) and benthic organisms. Invertebrate insects and plankton (such as copepods, cladocerans, and rotifers), serve as important intermediaries in the food web between primary producers (algae) and higher organisms such as fish and birds and also contribute to the decomposition of organic matter in the environment (https://www.epa.gov/great-lakes-monitoring/great-lakes-zooplankton-monitoring). The benthic community consists of organisms that crawl along the bottom, attach to solid surfaces, or burrow into soft sediments (such as mussels, worms, and arthropods) and would be expected to be similar to the benthic community of nearby Superior Bay which has been extensively sampled (Trebitz et al., 2010).

Within the Duluth Vessel Yard there is limited habitat for invertebrates. A majority of the Vessel Yard is buildings or impervious surfaces and the waters surrounding the piers are regularly dredged to maintain depth for operations. A majority of invertebrates found

within the project area are therefore aquatic and would use the waters and bottomlands surrounding the piers.

Construction noise and activities would disrupt existing habitat at the site, temporarily reduce light penetration and primary production, and potentially interfere with respiration and feeding mechanisms invertebrates. Mobile organisms, such as insects would be able to leave the project area to avoid impacts, and return upon completion of the project. Planktonic and benthic organisms incapable of avoiding project activities would likely be destroyed. The loss of these organisms is expected to be insignificant given the small area effected in relation to the surface are of Duluth-Superior Harbor and other industrial piers and slips in the area. Both types of organisms would be able to re-colonize the Vessel Yard following completion of project activities, with recolonization occurring in a relatively short period of time. As such, the determination for the proposed project actions is "**May affect, but not likely to adversely affect**" invertebrates.

3.1.2 Water Quality

The St. Louis River Estuary is highly turbid, with sediments regularly suspended and/or resuspended in the water column. Typical suspended sediment concentrations in the St. Louis River Estuary are 8-17 mg/L with temporary spikes over 100 mg/L following large disturbances such as storms (Kreitinger et al., 2017). For reference, the suspended sediment concentrations in Lake Superior range from approximately 0.6-6 mg/L (Kovalenko et al., 2019). Sediments are naturally transported within the St. Louis River and can become resuspended by both wind and ships within the estuary (Erdman et al., 1994). Suspended sediments contribute to turbidity or "cloudiness" in the water column, which limits how far light can penetrate through the water.

Construction activities would result in temporary increase in turbidity due to demolition and construction activities disturbing the lake bottom and potentially disrupting existing structures that are already deteriorated or damaged. Previous studies have found that mechanically resuspended sediments in the navigation channel settle within 1-4 hours

of the disturbance (Erdman et al., 1994). Therefore, turbidity effects would dissipate over time and distance from the work area, and would not have significant long-term (cumulative) effects.

The installation of new poles and light fixtures will increase the area of water surface surrounding the piers that is illuminated at night (Appendix C, Figure 4). In a river estuary with high turbidity, light can decrease up to 60% in the first foot below the surface, which would almost entirely eliminate light by a depth of 6 feet (Liu et al., 2005). Therefore, the maximum impact from the new light will occur at the water surface, with the impact rapidly decreasing as the depth of water increases. The simulated lighting design conditions projected the area of water surface that would be illuminated to a minimum of 1 fc. This threshold was used as 1 fc represents approximately 0.01-1% of daytime sunlight. A change in light at this level is unlikely to have an appreciable impact on primary production (photosynthesis) or visually-oriented feeding (Aksnes and Giske, 1993) which are two of the primary components of water quality that could be impacted by additional light.

The project actions will illuminate the water surface along the entire southern and western edges of the North Pier. This illumination will extend away from the southern edge of the pier a distance of approximately 30 feet, at which point the light will fall below 1 fc. Within this 30 foot strip running parallel to the pier, the light level reaching the surface will have an average illumination of 4.7 fc with a maximum illumination of 6.8 fc (Appendix C, Figure 4). These concentrations of light represent approximately 0.047-4.7% and 0.068-6.8% of daytime sunlight at the water surface, respectively.

The South Pier would see a much more substantial change from current conditions where most of the pier is unlit (<1 fc of existing lighting) with a hotspot of 37 fc at a ship berth (Appendix C, Figure 3). The proposed actions would illuminate the entirety of the pier, with light spilling onto the water surface on the northern and southern sides of the South Pier a distance of approximately 50 feet from the edge of the pier (Appendix C, Figure 4). Due to the fixture orientation, no light would spill onto the water surface on

the western end of the pier (Appendix C, Figure 4). The light level reaching the surface would average 1.7 fc with a maximum illumination of 8.2 fc on the north side (at the ship berth) and 5.9 fc on the south side. These concentrations of light would be approximately 0.017-1.7%, 0.082-8.2%, and 0.059-5.9% of daytime sunlight at the water surface, respectively.

The proposed additions of new light poles and new light fixtures will increase the area of water surrounding the vessel yard that receives artificial light at night and seasonally (i.e. winter). The distribution of light would be relatively uniform with a few areas with a higher intensity compared to existing conditions. The illumination at the water surface resulting from the new light fixtures will be a small percentage of typical sunlight. Given the turbidity within the estuary, this increase in light at the surface will not penetrate very far into the water and therefore will have **No Effect** on the physiology or behavior of aquatic organisms within the Vessel Yard.

An evaluation of the effects of placing fill in the waters of the United States, pursuant to Section 404 of the Clean Water Act was conducted by USACE, Detroit District (Appendix F).

3.1.3 Vegetation

The Duluth Vessel Yard is an industrial yard consisting of buildings, piers covered with concrete caps, concrete parking areas and work yards, and in-water access to the piers. The coastal location of the Vessel Yard means that impacts could occur to terrestrial (upland), wetland (partially submerged), and aquatic vegetation.

3.1.3.1 Terrestrial Vegetation

No terrestrial vegetation was observed in the project area due to lack of suitable substrate. As noted in Section 3.2, there are two vegetated areas on the landward corners of the Vessel Yard property, but neither of these areas would be impacted by any of the proposed project actions. The deciduous Soapberry (*Shepherdia canadensis*) shrub is a Species of Special Concern in the State of Minnesota. According to a query

of the NHIS, soapberry may occur within 1 mile of the Duluth Vessel Yard. The primary habitat of the soapberry is coniferous (pine and hardwood) forest landscapes, typically on steep rocky bluffs, rocky ledges, and outcrops. The last observation of a soapberry was north of the Duluth Vessel Yard, likely in the forests or cliffs along the northern shore of Lake Superior. Given that all work will occur in-water or on previously constructed and developed pier structures, a lack of impervious surfaces in the Vessel Yard property, and the distribution and habitat of noted Species of Special Concern (soapberry), the proposed repairs and improvements to the Duluth Vessel Yard have been determined to have **No Effect** on terrestrial vegetation.

3.1.3.2 Wetland Vegetation

As an industrial vessel yard, there is no wetland habitat or species present at the Duluth Vessel Yard. Therefore, the proposed project actions will have **No Effect** on wetlands or wetland species.

3.1.3.3 Aquatic Vegetation

"Aquatic vegetation" is a combination of all primary producers that spend their entire life submerged in the water, and are depended on said water for nutrients necessary for growth and reproduction. The high turbidity in combination with abundant nutrients present in the St. Louis River Estuary and regular dredging to maintain depth in the Harbor have created an ecosystem that is largely dominated by planktonic (microscopic free-floating) primary producers, rather than benthic macrophytes (large, leafy primary producers; Sierszen et al., 2004). A high abundance of plankton further contributes to light attenuation (limiting light penetration), especially near the water surface. As such, no aquatic macrophytes have been observed in the project area due to a lack of suitable substrate and regular operational traffic in the water. Planktonic organisms will be redistributed and damaged by the project actions, but their high numbers and rapid reproduction make any mortality insignificant.

With respect to aquatic vegetation, there are no listed species or critical habitat found within the project area. Following completion of construction, regular operational

activities and turbidity in the St. Louis River Estuary will result in a similar composition of aquatic vegetation, plankton-dominated. As such, the projects actions will have **No Effect** on aquatic vegetation.

3.1.4 Air Quality

Construction activities would have temporary, minor negative impacts on air quality in the air immediately surrounding the Vessel Yard. All equipment would be required to meet emission standards. As such, all emissions from the proposed activities would meet applicable standards of the Clean Air Act.

3.1.5 Physical Features

The Duluth Vessel Yard is located within the coastal zone of Lake Superior. As such, USACE is required under the CZMA to ensure that all project actions are consistent with Minnesota's Lake Superior Coastal Program. A review of relevant regulations was conducted and USACE provided the MNDNR its determination, Subject "Coastal Zone Management Act Federal consistency Determination for Duluth Vessel Yard Repairs and Improvements, Duluth, MN," on 29.April.2020 (Appendix G). The USACE CZMA Federal consistency determination indicated that the proposed activity would be undertaken in a manner consistent to the maximum extent practicable with the enforceable policies of the Minnesota Coastal Management Program. This is in accordance with 15 CFR §930.

Sediment samples have been taken of the Federal Navigation Channel, including adjacent to the Vessel Yard. Sediment is characterized as fine grained sand with some silt and organic material. Sediments were tested for contaminants and found to meet standards to in-water placement.

A review of the NHIS identified two Minnesota Biological Survey Sites of Biodiversity Significance within 1 mile of the Duluth Vessel Yard. The first is the Duluth Lakewalk to Lester River, and the second is Hearding Island and Southworth Marsh. Both site were given a biodiversity significance rank of "below," which indicates that these sites lack

occurrences of rare features or species, but may have conservation value local level and/or be a potential site for restoration efforts. No construction equipment will be passing through or working in these areas, therefore the project actions will have **No Effect** on these Sites of Biodiversity Significance.

The NHIS query also identified an Igneous unit (Middle Proterozoic) located at Enger Park, west of the Vessel Yard, approximately 1 mile away. Enger Park is about ½ mile upland of the Harbor and no construction equipment will be passing through the boundaries of the Park. Therefore, it is determined that the project actions will have **No Effect** on this feature.

3.2 Historic and Cultural Resources

The Duluth Vessel Yard is listed on the National Register of Historic Places for its contribution to Great Lakes navigation. The piers are a contributing feature to the historic integrity of the Duluth Vessel Yard. The USACE will consult with the Minnesota State Historic Preservation Office, federally recognized tribes and other interested parties in determining the effect under Section 106 of the National Historic Preservation Act. An Assessment of Effects was provided to USACE for the proposed activities that concluded that no adverse effect would result.

3.3 Socioeconomic Resources

3.3.1 Economic resources

The Duluth Vessel Yard repairs and improvements would enable continued operations of the DuAO in support of the Federal Navigation project in Duluth-Superior Harbor. The proposed actions would have no effect on channel operations or traffic within the channel. The DuAO would need to relocated USACE vessels and barges to secondary sites during construction, which may require a contract or memorandum of agreement between USACE and the site owner(s). The Duluth Vessel Yard repair and improvement project would not have a significant adverse impact on desirable community growth, tax revenues, property values, public facilities, public services, regional growth, employment or the labor force, business and industrial activity, farmland, or man-made resources. The project will also not displace, or lead to the

displacement, or any residents, businesses, or agencies. Any temporary minor adverse impacts due to the proposed actions would be offset by the benefit to recreational, charter, and/or commercial vessels which are dependent on continued channel operations.

3.3.2 Recreation

The proposed repair and improvement project would have minimal effects on recreation and aesthetics in the Duluth-Superior area. There would be noise and aesthetic impacts to the area surrounding the project, however these impacts would be temporary. Recreational activities such as boating and fishing would have negative impacts to the localized area surrounding the Vessel Yard, but users would be able to avoid these impacts by moving away from the construction site to other areas of the harbor.

3.3.3 Aesthetics and Noise

The project activities may not be aesthetically appealing and will create a noise disturbance in the area surrounding the Vessel Yard. These disturbances are not expected to be significant, and will be temporary in nature. As such, esthetics and noise impacts resulting from the proposed actions will cause no long-term or cumulative effects.

3.4 17 Points of Environmental Quality

The 17 Points of Environmental Quality are defined by Section 122 of the Rivers, Harbors, and Flood Control Act of 1970 (Public Law, PL 91-611). Effects to each of the 17 points are discussed below.

3.4.1 Noise

The project actions will create a noise disturbance in the area surrounding the Vessel Yard that is beyond ambient level or that which is typical for Vessel Yard Operations. The noise disturbances would be temporary in nature, lasting only as long as it takes to conduct the repairs and improvements. All construction will occur within the Vessel

Yard, which will localize noise disturbances to that and surrounding properties. The greatest noise levels would be generated during the installation of the SSP, which is one of the first tasks to be complete and would occur early in the construction season. Use of construction equipment will be limited to daylight hours so as to reduce night-time residential noise levels. Once construction is complete, ambient noise would return to levels experienced prior to construction.

3.4.2 Displacement of People

The proposed action would not displace any residents.

3.4.3 Aesthetic Values

The proposed action will alter the physical appearance of the piers, which are a contributing feature to the historic integrity of the Duluth Vessel Yard. Consultation under Section 106 of the National Historic Preservation Act produced an Assessment of Effects that concluded that no adverse effect would result. As such, the proposed actions will not have any long term negative impacts on the aesthetic nature or value of the Duluth Vessel Yard.

3.4.4 Community Cohesion

The proposed action would not disrupt or alter community cohesion.

3.4.5 Desirable Community Growth

The proposed actions will maintain the operational capacity of the Duluth Vessel Yard, which supports the USACE mission in the Duluth-Superior Area. This includes the Duluth-Superior Federal Navigation Project which supports community growth and development. As such, the propose actions will support desirable community growth by keeping the Duluth Vessel Yard operating at maximum potential.

3.4.6 Desirable Regional Growth

The proposed actions will maintain the operational capacity of the Duluth Vessel Yard, which supports the USACE mission in the Duluth-Superior Area. This includes the

Duluth-Superior Federal Navigation Project which supports regional growth and development. As such, the propose actions will support desirable regional growth by keeping the Duluth Vessel Yard operating at maximum potential.

3.4.7 Tax Revenues

The proposed actions would have no adverse effect on tax revenues. Support to community and regional grown (See sections 3.4.5 and 3.4.6) provided by the Vessel Yard may provide a beneficial impact to tax revenues both locally and regionally. As such, the proposed actions may provide a positive benefit to tax revenues.

3.4.8 Property Values

The Duluth Vessel Yard provides operational support for the maintenance and operation of the Duluth-Superior Federal Navigation Project. Repair and improvement of the Vessel Yard maintains the value of the Federal property by protecting structures and maintaining the Historical nature of the property. The Navigation Project also provides a protective value to adjacent property as well as properties in the Duluth-Superior area. As such, the proposed actions should maintain or provide a long-term benefit to property values.

3.4.9 Public Facilities

The Vessel Yard is Federal property that is closed to the public as it is an active work area. Mooring space for ships is available to rent in agreement with USACE; currently the National Oceanic and Atmospheric Administration (NOAA) and University of Minnesota Duluth (UMD) dock research vessels on the South Pier. The proposed actions would directly benefit partner agencies that use the Vessel Yard piers to dock their ships by maintaining the piers for future use. The proposed actions would also indirectly benefit the Federal Navigation Channel, which is a public facility for commerce and recreation, by providing a functional hub for USACE operations to maintain said navigation channel.

3.4.10 Public Services

The Vessel Yard supports the public service of maintenance of the Federal Navigation Channel and breakwater entrances to Duluth-Superior Harbor. The proposed actions would benefit these public services by providing a local site for USACE operations that support this public service.

3.4.11 Employment

The proposed action will have a minor benefit to employment due to the need for construction workers to conduct the repairs and improvements. USACE will release an Invitation for Bid for the construction contract that will be open to small businesses. The selected contractor will be providing and supporting employment through the execution of the contract for the proposed actions.

3.4.12 Business and Industrial Activity

The Duluth-Superior Federal Navigation Project supports business and industrial activities regionally, throughout the Great Lakes, and internationally by providing safe access to, and passage through, the Great Lakes. This supports business such as the transport of goods and materials. As such, the proposed action will benefit business and industrial activity by maintaining the operational capacity of the Vessel Yard which is responsible, in part, for the Duluth-Superior Federal Navigation Project.

3.4.13 Displacement of Farms

The Farmland Protection Policy Act is designed to reduce or minimize the impact of Federal programs on permanently converting farmland for nonagricultural purposes and uses. The Farmland Protection Policy Act includes prime and unique farmland, state or local lands of importance, forests, pastures, and other land but excludes water and urban lands. Given that the project area for this project is entirely in the St. Louis River Estuary situated in the urban environment of the City of Duluth, no lands covered by the Farmland Protection Policy Act will be impacted by the project actions.

3.4.14 Man-made Resources

The Duluth-Superior Navigation Project is a man-made resource that includes, amongst other things, the Federal Navigation Channel, breakwater structures to access Duluth-Superior Harbor, and anchorage basins for vessels. The proposed actions will provide maintenance and benefit to this man-made resource by maintaining the operational capacity of the Vessel Yard which is responsible, in part, for the Duluth-Superior Federal Navigation Project.

3.4.15 Natural Resources

Review of the proposed Vessel Yard repair and improvement project indicates it would not result in significant adverse effects to natural resources (See Section 3).

3.4.16 Air Quality

Construction activities would have temporary, minor negative impacts on air quality in the air immediately surrounding the Vessel Yard. All equipment would be required to meet emission standards. As such, all emissions from the proposed activities would meet applicable standards of the Clean Air Act.

3.4.17 Water Quality

The proposed actions would not result in significant adverse effects on water quality, including municipal and private water supplies. No significant adverse effects to the aquatic ecosystem in the areas of diversity, productivity, stability, recreation, aesthetic, and economic value would occur. Appropriate steps taken to minimize the adverse effects on the water quality at the proposed site include the use of uncontaminated fill materials, installation of fill behind previously installed SSP, and project coordination with the MPCA, MNDNR, USFWS, and City of Duluth. A 401 Water Quality Certificate is being coordinated with the MPCA. On the basis of the “Guidelines for Specification of Disposal Sites for Dredged or Fill Material” (40 CFR part 230), it has been determined that the proposed fill activity is in compliance with Section 404 of the 1977 Clean Water Act (Appendix F).

3.5 Resources considered but eliminated from consideration

Additional resources were identified but eliminated from consideration and not carried through the EA assessment process. These resources were determined to not be impacted by the project actions, not applicable to the project area, or otherwise not impacted and therefore did not warrant further inclusion.

3.5.1 Prime Farmland

The Farmland Protection Policy Act is designed to reduce or minimize the impact of Federal programs on permanently converting farmland for nonagricultural purposes and uses. The Farmland Protection Policy Act includes prime and unique farmland, state or local lands of importance, forests, pastures, and other land but excludes water and urban lands. Given that the project area for this project is entirely in the St. Louis River Estuary situated in the urban environment of the City of Duluth, no lands covered by the Farmland Protection Policy Act will be impacted by the project actions. As such, this resource was excluded from further evaluation.

3.5.2 Food and Fiber Production

Given that the project area is entirely in the St. Louis River Estuary and will not be converting any agricultural lands for other uses or impacting commercial fishing operations, no impacts are expected to food and fiber production from the project actions. As such, this resource was excluded from further evaluation.

3.5.3 Real Estate

This project will not involve the acquisition or transfer of property and lands by Federal agencies. All lands are property of the Federal Government and all work will be contained within the property limits. As such, real estate will be impacted in a similar manner by all alternatives and was therefore excluded from further evaluation.

3.6 Cumulative Effects

Cumulative effects are assessed to determine if the sustainability of any of the resources are adversely affected if the proposed actions were implemented. The spatial boundary for the assessment encompasses the Duluth Vessel Yard and the temporal boundary for the assessment extends to the year 2070 which is a reasonable project life for the proposed actions. The preferred alternative (Alternative 3) is reasonable foreseeable although the timing and order of repairs may be altered based on funding, contractor bids and availability, and construction logistics.

3.6.1 Cumulative Effects on Natural Resources

The proposed actions would have no cumulative impact on the natural resources within the area. The Vessel Yard was industrialized in the past and has been maintained in its current state for some time. The proposed actions are designed to provide similar pier structures, with a slightly larger footprint, that will undergo maintenance and operations that are equivalent to existing operations. The proposed and any future actions to repair or maintain the Vessel Yard will use state of the art engineering and technology, which could potentially reduce the impact to natural resources, thereby decreasing the cumulative impact over time. As such, there will not be a negative cumulative impact to natural resources.

3.6.2 Cumulative Effects on Physical Resources

The proposed actions would cause a one-time expansion of the pier footprint within the Federal property limits of the Duluth Vessel Yard. Reasonably foreseeable actions would include the maintenance of the pier structures as-is considering that further expansion would limit the water-space available for vessels and maneuvering. These changes from existing conditions do not change the land use of zoning of the Vessel Yard, and future work would be to maintain said use and zoning. Construction work, and impacts, to physical resources would be limited in time and space to the work being conducted, which would not cause a cumulative impact. As such, the proposed actions will not cause a cumulative impact to physical resources.

3.6.3 Cumulative Effects to Historic and Cultural Resources

The proposed actions are intended to preserve the Historic nature of the Duluth Vessel Yard. Reasonably foreseeable future actions would be to achieve the same level of preservation to maintain the Vessel Yard as a Historic and Cultural Resource. Combined, the proposed and future actions will have no cumulative impact on Historic and Cultural Resources.

3.6.4 Cumulative Effects Summary

Along with direct and indirect effects, cumulative effects of the proposed actions were assessed according to the guidance of the President's Council on Environmental Quality. There have been documented impacts to resources from past, proposed, and reasonably foreseeable actions that are expected to produce both beneficial and detrimental effects (Table 2). The proposed actions and cumulative effects are expected to be negligible.

Potential Impact Area	Past Actions	Proposed Actions		Cumulative Impact
		Construction	Operation	
Climate	Adverse	No impact	No impact	No impact
Geology & Soils	Adverse	No impact	No impact	No impact
Water Quality	Adverse	Negligible	No impact	No impact
Air Quality	Adverse	Negligible	No impact	No impact
Land Use	Adverse	Negligible	No impact	No impact
Aquatic Communities	Adverse	Negligible	No impact	No impact
Terrestrial Communities	Adverse	Negligible	No impact	No impact
Archaeological & Historical Properties	Adverse	No impact	No impact	No impact
Recreation	No impact	No impact	No impact	No impact
Social Setting	No impact	No impact	No impact	No impact
Other Social Effects	No impact	No impact	No impact	No impact
Energy	Adverse	No impact	Beneficial	No impact

Table 2: Cumulative effects summary for the creation, maintenance, and operation of the Duluth Vessel Yard. Proposed Actions are limited to those included in this Environmental Assessment while cumulative impacts include all maintenance work required for the entire Vessel Yard property.

4. Preliminary Agency Review

4.1 Agency coordination

Details on the proposed repair and improvements to the Duluth Vessel Yard were provided in November, 2019 to the: U.S. Fish and Wildlife Service (USFWS), U.S. Environmental Protection Agency (USEPA), Minnesota Department of Natural Resources (MNDNR), Minnesota Pollution Control Agency (MPCA), Duluth Seaway Port Authority (DSPA), City of Duluth, St. Louis County Planning and Development (Minnesota), and various Native American Indian Tribes and interests. Comments were received from the St. Paul office of the MPCA, MNDNR Federal Consistency Coordinator in Two Harbors, MN, and City of Duluth Planning and Development Division. These comments are discussed below.

4.2 Minnesota Pollution Control Agency

The MPCA provided comments on 31.December.2019, indicating specific topics and information the MPCA would like to see addressed in the EA.

4.2.1 Comments of note

The dimensions of the pier expansions post-construction, relative to the existing footprint and the chronological steps and construction materials to be used for the repairs should be described. A timeline for construction should be described for each phase of the project. The MPCA also requests that the EA identifies the applicable water quality standards for this section of the St. Louis River according to Minnesota Administrative Rules and the CWA, discuss or describe best management practices (BMPs) for construction operations, and any authorizations that would likely be necessary for project compliance.

4.2.2 USACE Response

Applicable water quality standards and BMPs are covered in detail in the CWA Section 404(b)(1) Evaluation (Appendix F). Additional standards will be coordinated through a Section 401 Water Quality Certificate, a letter requesting said certification will be

submitted to the MPCA. Additional permits, as necessary, will be the responsibility of the construction contractor to obtain.

4.3 Minnesota Department of Natural Resources

The Federal Consistency Coordinator for Minnesota's Lake Superior Coastal Program contacted USACE to discuss the submission of a CZMA Federal Consistency Determination.

4.3.1 Comments of note

The MNDNR confirmed the relevant regulations for a Federal CZMA consistency determination with Minnesota's Lake Superior Coastal Program. The MNDNR indicated that the Regional Governmental Units (RGUs) for the proposed project would be the MNDNR and the City of Duluth.

4.3.2 USACE Response

Early coordination letters were provided to both RGUs indicated. USACE personnel separately contacted the MNDNR and City of Duluth to coordinate agency-specific considerations resulting RGU status.

5. Major Findings and Conclusions

5.1 Regulatory Framework

The proposed repair and improvements to the piers at the USACE Duluth Vessel Yard located in Duluth, MN have been reviewed pursuant to the following Acts and Executive Orders:

- Fish and Wildlife Act of 1956
- Fish and Wildlife Coordination Act of 1958
- National Historic Preservation Act of 1966
- National Environmental Policy Act of 1969
- Clean Air Act of 1970
- Executive Order 11593, Protection and Enhancement of the Cultural Environment, May 1971

- Coastal Zone Management Act of 1972
- Endangered Species Act of 1973
- Clean Water Act of 1977
- Executive Order 11988, Flood Plain Management, May 1977
- Executive Order 11990, Wetland Protection, May 1977
- Executive Orders 13112 & 13751, Invasive Species, February 1999 & December 2016
- Executive Order 13186, Responsibilities of Federal Agencies to Protect Migratory Birds, January 2001
- Executive Order 13352, Facilitation of Cooperative Conservation, August 2004

The proposed repair and improvement actions have been found to be in compliance with these Acts and Executive Orders. A Federal CZMA Determination was submitted to the MNDNR on 29.April.2020. A Clean Water Act Section 404(b)(1) evaluation of the environmental effects of the discharge of fill into waters of the U.S. has been prepared and found to be in compliance (Appendix F). A Section 401 Water Quality Certificate, or waiver thereof, will be obtained from the State prior to construction. A review of listed species has been completed, and findings have been documented in compliance with the Endangered Species Act.

5.2 National Environmental Policy Act

This Environmental Assessment has been prepared in accordance with the National Environmental Policy Act; the Council on Environmental Quality, *Regulations for Implementing the Procedural Provisions of the National Environmental Policy Act* (40 CFR Parts 1500-1508); and the USACE, *Policy and Procedure for Implementing NEPA* (33 CFR Part 230).

5.3 Conclusions

Review of the proposed Vessel Yard repair and improvement project indicates it would not result in significant adverse environmental effects. Furthermore, the project is not

expected to result in any significant cumulative or long-term adverse environmental effects. Adverse effects would be minor, including short term noise and air emissions from equipment operation, localized temporary turbidity from construction operations, elimination of <1 acre of marginal aquatic habitat surrounding the existing vessel yard piers, localized increased in light pollution, temporary displacement of fish, and destruction of benthic organisms in the immediate work area. The Vessel Yard repairs and improvements would prevent possible destruction of portions of the pier and headwall structures and provide a long-term base of operations for USACE operations and maintenance of Duluth-Superior Harbor. Areas adjacent to the piers would return to a state similar to existing conditions following construction, allowing for recolonization and use by fish and wildlife. Federal and State listed species that may occur in the project area are likely rare, capable of moving away from the Vessel Yard during construction activities, and not reliant on any habitat within the vessel yard for their continued survival. As such, the project actions are not likely to adversely impact any managed species or natural resources.

The Duluth Vessel Yard is listed on the National Register of Historic Places for its contribution to Great Lakes navigation. USACE will consult with the Minnesota State Historic Preservation, federally recognized tribes and other interested parties in determining the effect of the proposed actions under Section 106 of the National Historic Preservation Act.

The Duluth Vessel Yard is located in a commercial and recreational waterbody. As an active industrial site, the Vessel Yard is not open to the public, therefore impacts to recreation and aesthetics would be limited to construction activities during repairs and improvements. One mission of USACE in Duluth-Superior Harbor is to maintain a navigation channel for commerce, to that end, the proposed actions will support the long-term economic function of the harbor with minor, if any, negative impacts during construction.

This Environmental Assessment concludes that the Duluth Vessel Yard repair and improvement project:

a. Has no significant cumulative or long-term adverse environmental impacts associated with project actions;
b. Is not likely to adversely affect any Federal or State listed species or critical or significant habitat;
c. Will produce benefits that outweigh the minor, temporary impacts that may results, and;
d. Does not constitute a major Federal action significantly affecting the quality of the human environment.

6. Public Review

6.1 Dissemination of Environmental Assessment

This Environmental Assessment will be made available to the USEPA, USFWS, MPCA, MNDNR, MN SHPO, Native American interests, City of Duluth, and other Federal, state, and local agencies, interested groups, and individuals. Following this period and a review of the comments received, a final determination will be made by the District Engineer regarding the necessity of preparing an Environmental Impact Statement (EIS) for the Duluth Vessel Yard repair and improvement project, Duluth, Minnesota.

6.2 Preliminary EIS Determination

Based on the results of this Environmental Assessment, it appears that the recommended alternative would not cause significant adverse effects on the quality of the human environment; therefore preparation of an Environmental Impact Statement (EIS) is not required. Therefore, a Preliminary Statement of Findings/Finding of No Significant Impact (SOF/FONSI) is included with this Environmental Assessment. If the District Engineer determines that an EIS is not necessary, the Preliminary SOF/FONSI

would be finalized and environmental compliance for the proposed Duluth Vessel Yard repair and improvement project would be complete.

Literature Cited

Aksnes, D.L. and Giske, J. 1993. A theoretical model of aquatic visual feeding. Ecological Modelling 67(2-4): 233-250. https://doi.org/10.1016/0304-3800(93)90007-F

Becker, G. C. 1983. The fishes of Wisconsin. University of Wisconsin Press, Madison, Wisconsin. 1052 pp.

Breneman, D., Richards, C., Lozano, S. 2000 Environmental influences on benthic community structure in a Great Lakes Embayment. J. Great Lakes Res. 26(3): 287-304.

Environmental Protection Agency. 2019. Great Lakes Zooplankton Monitoring. Available online at: https://www.epa.gov/great-lakes-monitoring/great-lakes-zooplankton-monitoring. Last Accessed: 28.May.2020.

Erb, J., Humpal, C., and Sampson, B. 2018. Distribution and abundance of wolves in Minnesota, 2017-2018. Minnesota Department of Natural Resources. 12 pp. Available online at: https://files.dnr.state.mn.us/wildlife/wolves/2018/survey-wolf.pdf. Last Accessed: 29.May.2020.

Erdman, J.B., Stefan, H.G., and Brezonik, P.L. 1994. Analysis of wind- and ship-induced sediment resuspension in Duluth-Superior Harbor. J. Am. Water Res. Assoc. 30(6): 1043-1053. https://doi.org/10.1111/j.1752-1688.1994.tb03351.x

Estep, K.R. 2019 Genetic origins and movement of Lake Sturgeon *Acipenser fulvescens* in the St. Louis River and Western Lake Superior [Master's of Science]. [Steven's Point, Wisconsin]. University of Wisconsin. 118 p.

Hoff, M. H., and Todd, T. N. 2004. Status of the Shortjaw Cisco (*Coregonus zenithicus*) in Lake Superior. Annales Zoologici Fennici 41(1):147-154.

Kovalenko, K.E., Reavie, E.D., Bramburger, A.J., Cotter, A., and Sierszen, M.E. 2019. Nearshore-offshore trends in Lake Superior phytoplankton. J. Great Lakes Res. 45(6): 1197-1204. https://doi.org/10.1016/j.jglr.2019.09.016

Kreitinger, J., Gidley, P., Felt, D., Mahoney, M., Johnson, E., and Horner, P. 2017. Duluth Superior Harbor 21st Avenue West pilot project – Turbidity monitoring final report. U.S. Army Engineer Research and Development Center, Technical Analysis Memorandum.

Liu, W-C., Hsu, M-H., Chen, S-Y., Wu, C-R., and Kuo, A.Y. 2005. Water column light attenuation in Danshuei River Estuary, Taiwan. J. Am. Water Res. Assoc. 41: 425-435. doi:10.1111/j.1752-1688.2005.tb03746.x

Public Law, 91-611, Title I Rivers and Harbors. December 31, 1970.

Reed, J. M., L. W. Oring, and Alberico, J. A. 1991. Common Terns at Minnesota's largest colony: breeding site shift, population decline, and reproductive success. Loon 63:12-16, Spring 1991.

Schram, S.T., Lindgren, J., Evrard, L.M. 1999. Reintroduction of Lake Sturgeon in the St. Louis River, Western Lake Superior. North American Journal of Fisheries Management. 19(3): 815-823.

Scott, W. B., and Crossman, E. J. 1973. Freshwater fishes of Canada. Fisheries Research Board of Canada Bulletin 184, Ottawa, Canada. 966 pp.

Sierszen, M.E., Morrice, J.A., Moffett, M.F., and West, C.W. 2004. Benthic versus planktonic foundations of three Lake Superior coastal wetland food webs. J. Great Lakes Res. 30(1): 31-43.

Trebitz, A.S., West, C.W., Hoffman, J.C., Kelly, J.R., Peterson, G.S., Grigorovich, I.A. 2010. Status of non-indigenous benthic invertebrates in the Duluth-Superior Harbor and the role sampling methods in their detection. J. Great Lakes Res. 36(4): 747-756.

U.S. Department of the Interior, Fish and Wildlife Service. 1978. Reclassification of the Gray Wolf in the United States and Mexico, with determination of critical habitat in Michigan and Minnesota. Final Rule. Federal Register. March 9: 43(47): 9607-9615.

U.S. Department of the Interior, Fish and Wildlife Service. 2001. Endangered and threatened wildlife and plants; Final determination of critical habitat for the Great Lakes breeding population of the Piping Plover. Final Rule. Federal Register. May 7: 66(88): 22938-22969.

U.S. Department of the Interior, Fish and Wildlife Service. 2014. Rufa Red Knot background information and threats assessment. Available online at: https://www.fws.gov/northeast/redknot/pdf/20141125_REKN_FL_supplemental_doc_FINAL.pdf Last accessed: 29.May.2020.

U.S. Department of the Interior, Fish and Wildlife Service. 2014. Endangered and threatened wildlife and plants; Threatened Species Status for the Rufa Red Knot. Final Rule. Federal Register. December 11: 79(238): 73706--73748. Available online at: https://www.govinfo.gov/content/pkg/FR-2014-12-11/pdf/2014-28338.pdf#page=1 Last accessed: 29.May.2020.

Appendix A: 65% Design Documentation Report

FY20 DULUTH VESSEL YARD REPAIRS

O&M

DULUTH, MINNESOTA

65% DESIGN DOCUMENTATION REPORT

DRAFT

US Army Corps of Engineers

Detroit District

1. PROJECT DESCRIPTION 1
1.1 Background 1
1.2 Location 2
1.3 Authorization 2
2. REFERENCES 2
3. SUMMARY OF OBSERVATIONS 3
3.1 North Pier: 3
3.2 Headwall: 5
3.3 South Pier: 7
4. DATA COLLECTION 11
4.1 Survey Data Collection 11
5. DESIGN – FY20 11
5.1 Design Considerations 11
5.2 Pre-Installation Tasks and General Scope of Work 13
5.3 SSP Location Relative to Existing Improvements 13
5.4 Earth Retention System (ERS) Design 14
5.4.1 Design Guidance 14
5.4.2 Typical Design Section 14
5.4.3 Design Assumptions 14
5.4.4 Hydrostatic Loading 15
5.4.5 Lateral Earth Pressure 15
5.4.6 Design Surcharges 15
5.4.7 Ancillary Loadings 16
5.5 Results 16
5.5.1 SSP Design 16
5.5.2 SSP Restraint Design 16
5.6 Mooring Loads 17
5.6.1 Results 17
5.7 Mooring Bollard Foundations 18
5.8 Infill Stone 18
5.9 Proposed Ancillary Improvements 19

DRAFT

1. PROJECT DESCRIPTION

1.1 Background

The existing pier and headwall structures located on the subject property generally consist of timber substructures capped with reinforced concrete cap blocks which, in turn, are supporting mooring bollards which allow for vessels to be docked at the subject property. In brevity, existing structural components consist of a combination of timber cribbing with granular infill with timber piles placed at a regular spacing to support gravity loads generated from the concrete cap blocks. Intermittent battered piles/wooden struts were also placed to provide lateral resistance to the cribs and to likely provide resistance to lateral mooring loads. Both the north pier and headwall structure was originally constructed in around 1904 while the south pier was constructed in around 1926. During the construction of the south pier, the north pier was reconstructed as well. Both the north and south piers (and the associated headwall) have had varying degrees of reconstruction performed in the calendar years 1931, 1940, 1946, 1948 and 1975. See Figure 1 (below) for further information. The undersigned believes that Wakefield sheeting has likely been used to supplement the construction over time.

DRAFT

Figure 1 - Existing Duluth Vessel Yard. North pier in red, east headwall in green and south pier in purple (north is up).

1.2 Location

The project site is located on Lake Superior in Duluth, St. Louis County, Minnesota. The Vessel Yard is used in support of the Duluth AO daily operations including the Duluth Floating Plant. The Vessel Yard also provides mooring to the Environmental Protection Agency (EPA) Lake Explorer research vessel but also a research vessel owned by the University of Minnesota. Please refer to Figure 2 (below) regarding the general directional orientation of the Project Site with relation to the surrounding populated area.

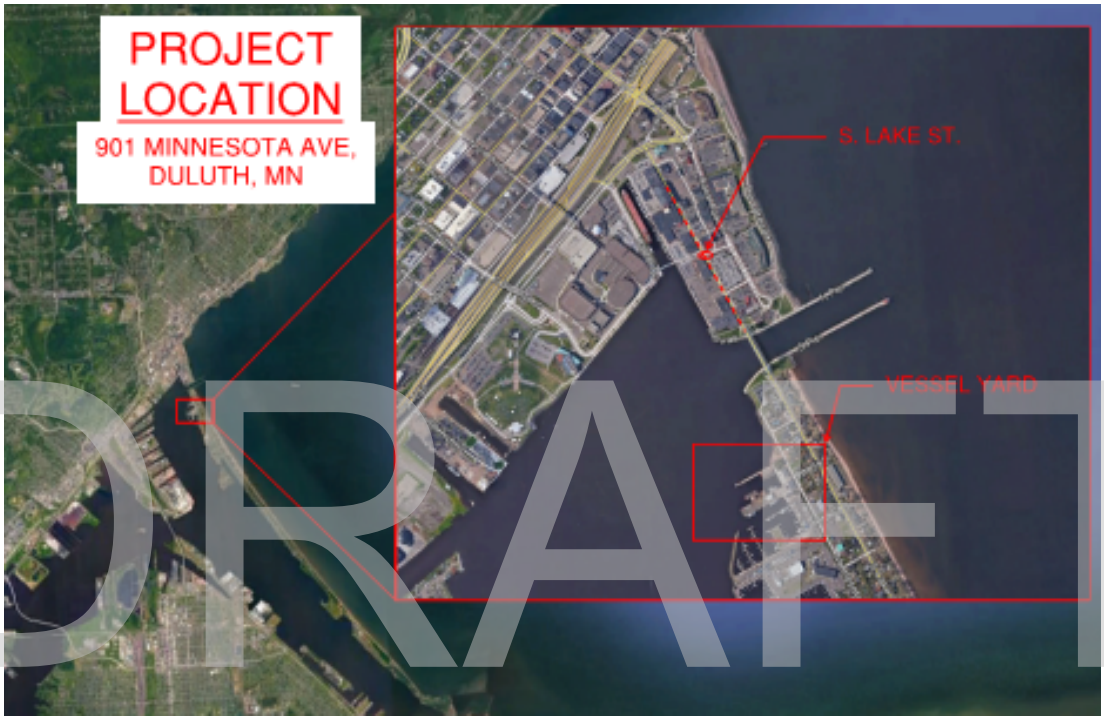

DRAFT

Figure 2 - Location Map

1.3 Authorization

The project was authorized by Rivers and Harbors Acts of June 3, 1896; March 2, 1907; May 28, 1908; July 27, 1916; March 2, 1919; January 21, 1927; July 30, 1930; August 30, 1930; July 16, 1952; and, October 4, 1961; and by the Water Resources Development Act of November 17, 1986.

2. REFERENCES

The following is a list of references that were considered at least in part during the design of the various project features:

- EM 1110-2-2504, “Design of Sheet Pile Walls”, 31 March 1994;
- EM 1110-2-1100, “Coastal Engineering Manual”; 30 April 2002;
- EM 1110-2-2906, “Design of Pile Foundations”, 15 January 1991;

- EM 385-1-1, "Safety and Health Requirements Manual", 30 November 2014;
- Design and Construction of Ports and Marine Structures – DeF. Quinn;
- AISC Steel Construction Manual 8th edition, 1989;
- NAVFAC DM7.01;
- Principles of Foundation Engineering, 4th ed. – Braja M. Das;
- FHWA "Lateral Support Systems and Underpinning" RD 97-130 Vols. 1-3
- Design of Welded Structures – Blodgett
- AWS - Structural Welding Code – Steel - D1.1 2015
- Building Code Requirements for Structural Concrete – ACI 318-14
- MnDOT Standard Specifications for Construction (most current edition);
- Applicable correspondence with the Duluth AO;

3. SUMMARY OF OBSERVATIONS

On August 7 through 9, 2019, USACE performed a site visit to the Vessel Yard to review the existing conditions of the Project Site and discuss with the AO the desired future operational needs of the site. A summary of the observations made at the site as well as the engineer's associated opinions regarding the proposed design is outlined below.

DRAFT

3.1 North Pier:

The north pier is in poor condition and currently does not meet the operational requirements of the Duluth AO. This is primarily because the mooring vessels larger than the scow to the south side of the north pier (beyond where the scow is currently located) is not possible. The undersigned was informed that when a vessel is moored to the bollards on the south side of the north pier, movement of the existing cap blocks is observed, which generally indicates that the bearing piles securing the mooring posts to the pier substructure have deteriorated to the point where the cap blocks are not fully secured. This is commonly due to deterioration of the piling at the "wet zone". Deterioration of wood structures due to repeated wetting/drying at a zone delimited by the long term water level is a causative phenomenon with similar types of construction.

Overall, visual observations show irregular joining between cap blocks as well as spalling of cap block corners at joints which point to evidence of prolonged movement of the cap blocks over time. On the north side of the pier, rotation of the wall outward is evident, indicating that loss of support from the underlying bearing piles due to deterioration of the piles at the waterline is occurring. Based on discussions with the yard manager, lateral movement in a N-S direction is also evident during high wave action, generally indicating loss of lateral strength of the pier, allowing the pier to rack perpendicular to the length of the pier.

During the engineer's site visit, the engineer performed periodic soundings of the concrete slab on the north pier. Many soundings appeared hollow in nature, which likely indicate that voids are present under the existing slab. This suspicion appears to be a plausible assumption based on the behavior of the structure (lateral racking) during significant wave

events as a loss of internal mass between the confines of the pier exacerbates the lateral movement of the pier.

Figure 3 - Photo of north pier looking west, rotation of north cap block/curb evident.

DRAFT

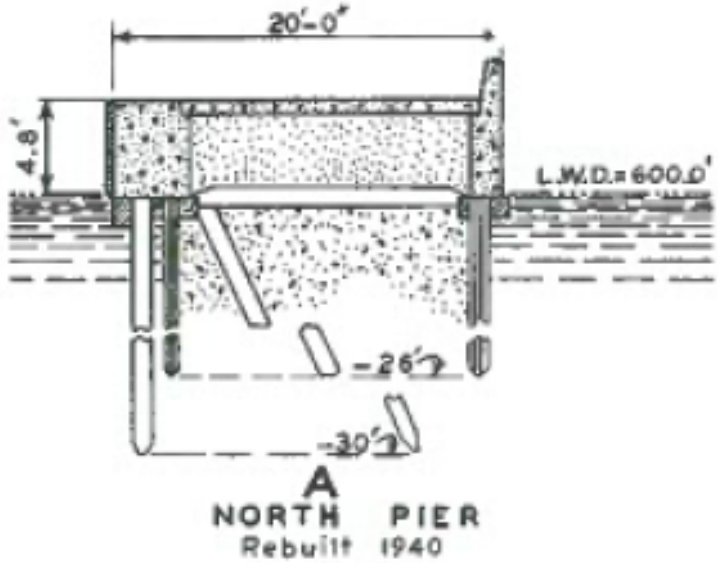

Figure 4 - Typical section through north pier looking west showing the existing construction.

Figure 5 - Typical section through north pier looking west. Note lateral movement of cap blocks in background.

DRAFT

3.2 Headwall:

The condition of the headwall concrete appears unremarkable based on its age. The general construction of the headwall is shown in Figure 7. We understand that the existing Portland Cement Concrete (PCC) apron behind the headwall was replaced in about the year 2010. upon review of the existing concrete apron (i.e., slabs) located behind the headwall, significant irregular cracking of the slabs was observed, particularly within the first 20 feet of the apron which roughly corresponds to the limit of the first slab beginning next to the back of the headwall. Periodic soundings performed by the undersigned in this area also appear to indicate voids are present under the concrete apron we well. Based on our discussions with the yard manager, we understand that coring of the slab was performed in this area and voids under the existing apron behind the headwall have been confirmed. Backfill materials were reported to be predominantly granular in nature (i.e., sand). Refer to Figures 6 and 7 on the following page.

In an effort to attempt to estimate the possible lateral extent of the voids behind the headwall, the undersigned used basic field measurements of determining the elevation of the existing slip bottom along with conventional Rankine AEP theory to come up with a rough guess estimate of where the active zone of the headwall would terminate at the exiting ground surface. Using a nominal internal friction angle of 30 degrees (which would be consistent with a granular soil in a loose condition), along with a measured retained height of 10 feet (based on field measurements), an active zone width of about 20 feet was determined. This estimation appears to be relatively consistent with the observations made in the field by the undersigned. Refer to Figure 9 on Page 8.

Figure 6 - Irregular cracking of concrete apron looking south (voids confirmed via sounding)

DRAFT

Figure 7 - Irregular cracking of concrete apron looking west (voids confirmed via sounding)

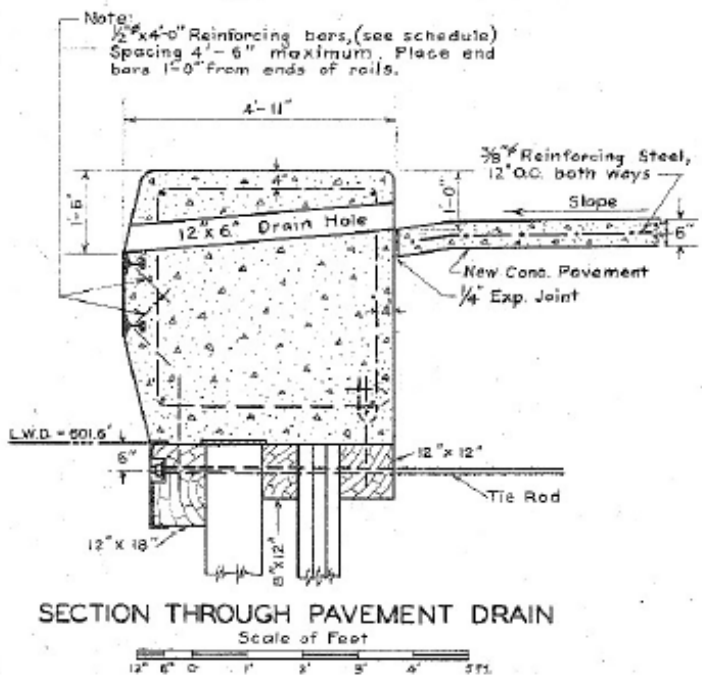

Figure 8 - Enlarged detail of cap block along the east headwall note timber supports terminating at the "wet line". South Pier has similar construction.

It is the undersigned's opinion that the Wakefield sheeting supporting the headwall soils has deteriorated to the point that loss of material is occurring (which in turn, support of the concrete aprons behind the headwall cap blocks). Similar to the north pier, some amount of lack of vertical support of the cap blocks can be reasonably be assured at this point, mainly due to deterioration of the timber bearing piles at the "wet zone". The undersigned believes that the condition has not manifested itself to the degree that the north pier is currently experiencing of the north pier likely due to the protected nature of the headwall.

3.3 South Pier:

The south pier is in a relatively acceptable condition and is currently meeting the operational requirements of the Duluth AO. However, an increasing amount of work is being performed by the AO filling large voids behind the existing pier face that appear – particularly after storm events. The yard manager indicates that sinkholes requiring over 2 yards of material to fill are not uncommon after storm events. Concrete aprons adjoining the pier face have been observed to be undermined with documented voids extending as much as 24 inches below the bottom of the concrete slab. At the northeast corner of the south pier where the south pier intersects the headwall, portions of the existing slab appear to be only supported by steel dowels installed during the original placement of the apron. Concrete breakout of the bottom edge of the apron slab was observed at some dowel locations. The unsupported nature of the slab and overall extent of the voids observed is cause for concern as the paved areas are trafficked by vehicles and a large forklift as part of daily vessel yard activities. Refer to Figure 9 on the following page.

DRAFT

Figure 9: Existing concrete apron at NEC of south pier adjacent to warehouse building. Limited observations appear to indicate voids and undermining (Looking west-northwest).

DRAFT

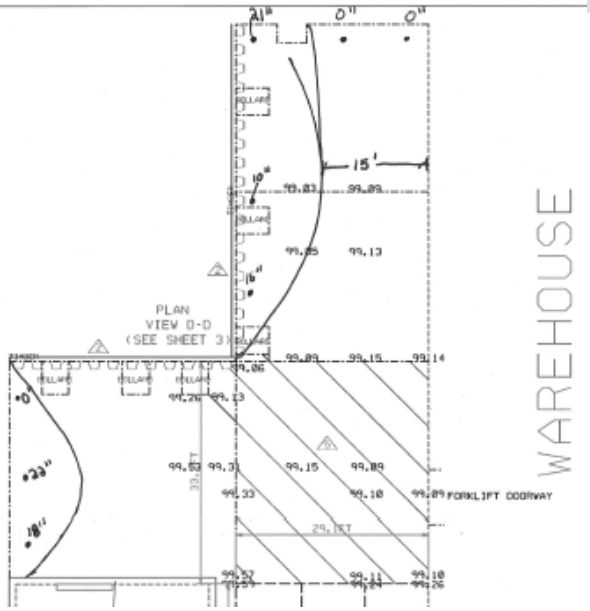

Figure 10: Approximate extent of voids under the existing apron on the south side of the warehouse building as reported by Duluth AO (north to the right).

Overall, the interior of the south pier consists of infill materials and its surface is unimproved. Therefore, precise visual observations of issues are difficult to make other

than the observations of areas of differing fill materials which seem to indicate that fill soils imported from off-site sources has been used to backfill voids behind the existing Wakefield sheering.

Within the existing warehouse building, visual observations indicate that the existing concrete slab is unremarkable in nature and shows distress that is typical for a slab of its age and usage. Based on our review of the historical plans, the warehouse building is pile supported but the slab is a conventionally supported slab on grade. Voids under the building slab have not been confirmed at this time.

With regards to the existing machine shop building at the southeast corner of the property, the existing slab on grade was covered with rough sawn timber some time ago, reportedly due to differential settlement of the slab. Based on historical drawings, the building appears to be pile supported. Condition of the slab cannot be reviewed.

The west end of the south pier is in particularly poor condition and the end of the pier is rotating into the harbor due to loss of support of the cap blocks from the underlying timber piling. Movement of the bollard foundations on the south side of the south pier has been observed during extreme storm events. The newer bollard foundations installed in around 1975 are not pile supported but rather are supported by conventional foundations bearing on existing infill material. As the condition of the infill material is not known and cannot be verified with any reasonable degree of certainly, and due to the increase in the loss of infill material over time, the future performance of these bollards is uncertain at this time.

With regards to the void present at the southeast corner of the project site, the presence of a void of such magnitude is concerning as the area has had PZ27 SSP installed during performance of the 1975 repairs. The amount of fill material lost in the undersigned's experience, cannot be solely attributed to loss through the interlocks. It has been mentioned that corrosion of the sheeting from microbiological action could be an avenue for the creation of penetrations in the sheeting itself leading to loss of infill material. This phenomenon is not known to the reviewer. However, with that being said, based on the undersigned's experience, loss of material through competent, functional and properly installed interlocked SSP is not a realistic explanation as to why significant voids were present under the slabs in the area of the old boathouse. Refer to Figures 11, 12 and 13 below on the following page:

DRAFT

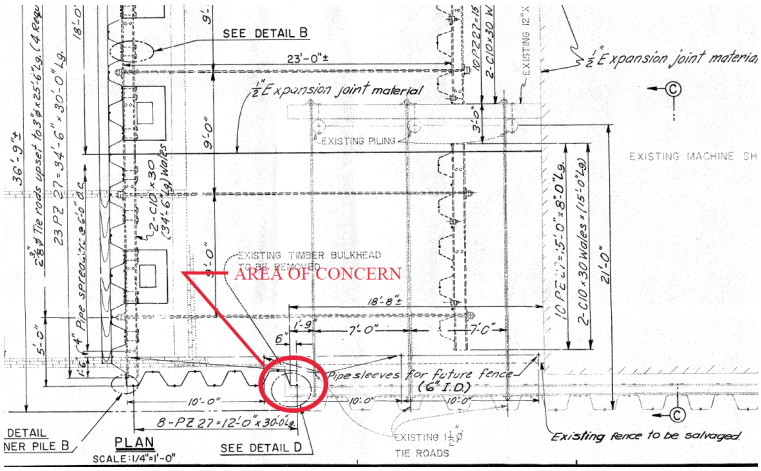

Figure 11: Plan view of SEC of site where 1975 work is merried to existing SSP already in place (north is up).

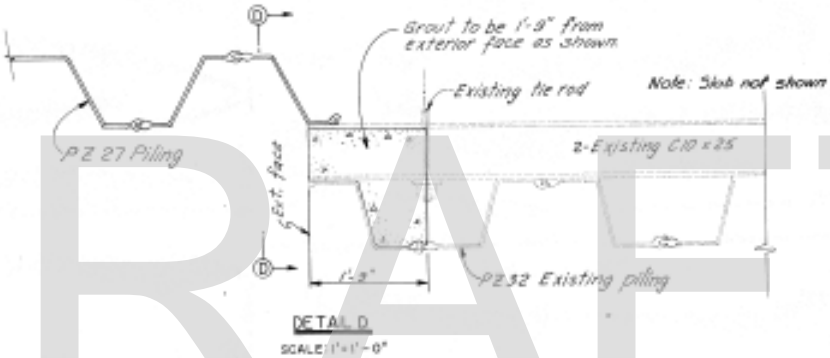

DRAFT

Figure 12: Enlarged view of the merrying detail (Detail D in figure 7 above). North is up.

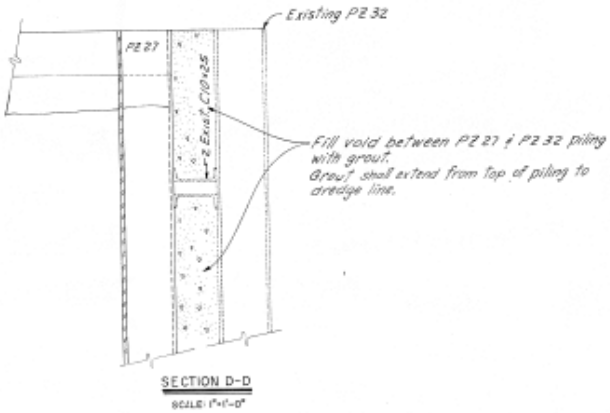

Figure 13: Section of Detail D from 1975 Plans showing the merrying methodology consisting of backfilling the annulus with unreinforced grout only.

Figure 14: Photo of detail D. PZ27-PZ32 sheet terminations in pink, property line in purple and cold rolled sheeting installed by property owner in green.

DRAFT

Until the existing apron in the immediate area of the SWC of the existing SSP is exposed for further investigation, it is of the undersigned's opinion that the PZ27 sheeting installed in 1975 was not terminated where the existing PZ32 sheeting ends. This likely left an avenue for the grout plug to deteriorate and subsequently create an open void that possibly led to soil to escape over time. This will be investigated further once the existing concrete pavements are removed.

4. DATA COLLECTION

4.1 Survey Data Collection

Bathymetric survey data used in the design was obtained by USACE in August and September of 2019. Topographic survey data was obtained throughout the fall and winter of 2019 as well as the spring of 2020. In the surveys, the grid coordinate system utilized was referenced to the Minnesota State Plane Coordinate System, Lambert Project, North Zone (2201), North American Datum 1983 (NAD83), US Foot. The vertical control references to Low Water Datum at elevation 601.1 International Great Lakes Datum of 1985 (IGLD85).

5. DESIGN – FY20

5.1 Design Considerations

There are some points that were to be considered during the design of the improvements for all of the subject project. **However, at this time, the DDR only reflects the proposed improvements to be performed for FY20 which will focus on the south pier only.** Nevertheless, the following points were made clear during the August 2019 site visit:

- The DAO desires that any design generated be permanent in nature and meets or exceeds the future operational needs of the AO.

- The amount of voids under existing, covered (i.e., paved) surfaces is likely extensive. Grouting of voids is deemed not feasible due to the cost, and overall inability to control and confine grout plumes to known problem areas. Quantities cannot be accurately estimated without carrying a high contingency. Even after grouting, there is still potential for existing soil arches which have not fully been mobilized to be present which increases the risk of void reoccurrence over time after repairs have been complete. As such, it is more beneficial to remove the existing hard surfaces and visually review affected areas.

- Due to the type of construction and with current water levels being almost 2 feet higher than the design LWD, proper underpinning of the existing cap blocks is not deemed feasible, particularly since the underlying bearing soils cannot be reasonably be improved as required to satisfy concerns regarding the reoccurrence of voids after construction is complete. Based on the above, the undersigned recommends removal of the existing concrete surfaces and cap blocks to properly chase out voids. This can be easily done via more conventional hoepack compaction once the pier faces are encapsulated with new SSP.

- Based on projected mooring loads (Duluth AO has indicated a proposed future operational mooring load of 50T), and lack of confidence in the ability of the subgrade soils within the piers to provide proper long term support to proposed new construction, providing new pile supported bollards is believed to be the best option at this time.

- As the existing dwelling at the northeast corner of the property is to be demolished, it has been recommended to consider incorporating the future use of the area into the proposed construction to facilitate its integration at a later date. The general intent is to convert the area to a parking lot at some later time. This portion of the site could possibly be used as a staging area for the FY20 Work if the structure is demolished in time. If the demolition is not performed in time, a City-owned parcel of land on the north side of the north pier will be used as a staging area.

Based on the extent of the necessary rework required to reestablish support for proposed new improvements along with a desired new (future planning) dredge depth of EL. -20 LWD, the undersigned believes that internally braced steel sheet pile (SSP) walls are most feasible for the project, particularly since new pile supported bollards are required.

The top of the new SSP and new concrete cap block structure for the south pier will be set at EL. +5.33 LWD, or 16 inches above the current top of concrete cap elevation. Note that this elevation is for the new sheet pile and cap blocks only. The finished aggregate surface (and any future ancillary concrete surfaces to be removed and replaced over time) within the center of the pier remains the same due to fixed finish floor elevations. One way drains will

DRAFT

be installed at regular intervals within the concrete cap to alleviate trapped surface water accumulations.

5.2 Pre-Installation Tasks and General Scope of Work

As the new SSP is to be installed in front of the existing improvements for most of the south pier, it is not believed that any major tasks are required to be performed prior to the majority of the SSP installation other than the removal of ancillary structures such as fenders and verification of the driveline for obstructions (such as stone). However, for a portion of the SSP to be installed near the southeast corner of the project site, the demolition of a portion of the existing pier edge will be required to allow for the SSP to be installed with a straight alignment. See Figure 15 below.

Figure 15: Photo of SEC of Project Site. Note south SSP driveline (pink) extending into existing improvements as to create a straight alignment.

DRAFT

Additional required tasks to allow for the subsequent construction of the proposed new improvements, which are likely to be performed after placement of the new SSP include backfilling of the annulus between new and old with clean open graded riprap up to near the design LWD, as well as the removal of the existing cap block system and a portion of existing concrete pavements as noted on the Project Drawings mainly due to the presence of voids which will require further investigation and proper backfilling.

In all areas, minor excavation is anticipated to be performed near/at the LWD to remove deleterious materials and those portions of the existing improvements that are deteriorated such that they are disturbed during removal of the concrete cap blocks. Some minor excavation may be required to clear drivelines to allow for proposed support piles to be properly advanced. We expect that improvements could extend as deep as 1 to 2 feet below the LWD, but overall, excavations are not expected to extend deeper than this elevation.

5.3 SSP Location Relative to Existing Improvements

The alignment of the SSP wall will be established to allow for about a 2-foot clear space between the outside face of the existing structures to the rear face of the new SSP. Overall,

the goal of establishing this offset was to not have the existing structures (if any) become an obstruction while driving the SSP, and also increase the operational width of the piers and headwalls to meet future operational needs where possible. However, as previously mentioned above, the SSP along the south side of the south pier will be advanced as close as reasonably possible to the face of the existing pier surface to maximize the operational width of the south slip area. It is the desire of the AO to continue the southern SSP alignment in a straight line which will require the partial demolition of the existing pier edge during SSP installation.

5.4 Earth Retention System (ERS) Design

5.4.1 Design Guidance

The Earth Retention System (ERS) was designed using Civiltech "Shoring Suite" software - a proprietary piece of software used by the undersigned for the design and analysis of similar structures. The USACE publication titled "Design of Sheet Pile Walls" - EM1110-2-2504 was also considered at least in part during the design process. Soil parameters were generated based on existing geotechnical information.

Ancillary steel members comprising the earth retention system (such as connections) were designed using ASD methodology as outlined in the AISC Steel Construction Manual (8th edition) while considering the above mentioned EM. Tie rods were designed using Post Tensioning Institute (PTI) guidelines outlined in the PTI document "Recommendations for Prestressed Rock and Soil Anchors". Drilled in place piles used to support the perimeter grade beam (which in turn supports both the bollards and the SSP) were designed using Federal High Administration (FWHA) methodology outlined in FHWA publication FHWA-SA-97-070 – "Micropile Design and Construction Guidelines".

DRAFT

5.4.2 Typical Design Section

A design section was prepared for each portion of the subject pier as needed to meet the needs of the project. Each design section was developed and analyzed for internal stability via to determine depth, restraint size, and maximum moment and shear for a particular SSP wall. The section analyzed and designed for each area generally accounts for the highest backfill and lowest dredge line elevation, which obviously would induce the highest restraint forces. Each profile was analyzed using a maximum groundwater differential of 4 feet and accounts for appropriate surcharge loads.

5.4.3 Design Assumptions

The following load conditions were considered in order to determine SSP sizing, the associated embedment depth(s) and the sizing of the ancillary structural items supporting the SSP:

- Hydrostatic loading (specifically, a perched water condition);
- Lateral earth pressures;
- Surcharge loadings (i.e., traffic loading, dead loads from surcharges and dead loads from ice loading);

5.4.4 Hydrostatic Loading

To determine the extent of hydrostatic loading on the structure, historical water level data for Lake Superior was gathered from USACE sources. The data shows that over the past five years, water levels are trending upwards on Lake Superior and have varied from -0.8 LWD to +1.8 LWD. For the purpose of this design analysis, the water level of Lake Superior is assumed to be at EL. -1.5 LWD for calculation purposes only.

On the land side/interior of the SSP, a free draining material was selected for the backfill material between the existing improvements and the proposed sheet pile wall. Additionally, it was assumed that the water level on either side of the SSP would be equal long term. However, a maximum elevation differential of 4 feet was considered in the design calculations which would account for short term imbalanced loading that could possibly occur (albeit unlikely).

DRAFT

5.4.5 Lateral Earth Pressure

Lateral earth pressure loads due to fill material and in situ soils were applied to the structure using the most current available geotechnical information. Historical documents generally indicate that the pier infill consists of sand and gravel fills. Required factors of safety were determined in accordance with industry standards. Soil parameters used in determining lateral earth pressure loads can be found within the calculation package. Both active and passive soil pressures were developed using log spiral methodology in accordance with accepted published geotechnical engineering standards.

Final embedment lengths, brace loads and design (allowable) sheeting section modulus were selected based on a final global stability factor of Safety (FS) of 1.5 while rounding up the steel sheeting to the next 5 foot length due to economy as SSP is most commonly ordered (and sold) in 5-foot intervals (which accounts for cut-off).

5.4.6 Design Surcharges

A design surcharge load for SSP design purposes was selected based on the larger of the following values:

- Uniform traffic surcharge of 250 psf (ref. AASHTO 11.19.10.2);
- Uniform ice loading of 150 psf.

Surcharge loads are applied uniformly across the entire active zone of the SSP wall. Overall, the application of a 250 psf uniform live load surcharge is judged more than adequate based on the intended use of the project site. Overall, the magnitude of the load was selected based on experience with similar structures and also to account for surcharges generated by maintenance and/or construction vehicles, the storage of equipment and fills. All surcharge loads will be modeled and applied to vertical surfaces using the Boussinesq theory. For design of the pile caps, only an ice load was considered as trafficking of the cap is not possible.

5.4.7 Ancillary Loadings

The undersigned has discussed the topic of hydraulic action and ice thrust loading with H&H (i.e., Eric Tauriainen). The undersigned was informed that due to the positioning of the vessel yard in the harbor, no site specific considerations are required for lateral loading applied to the SSP from either ice loading (i.e., ice load shove) or hydraulic action (i.e., wave load).

5.5 Results

5.5.1 SSP Design

A hot rolled SSP with a section modulus equivalent to a PZC18 SSP profile has been selected for this project. The section modulus used for the design of the SSP has been selected to resist the calculated maximum bending moments and shears associated with the proposed construction, but also considers the requirement of maintaining deflections of the SSP within a reasonable value, based on structures of similar nature. Based on research performed by Goldberg et al, it has been estimated that for sands and gravels, corresponding vertical deformations within the zone of influence can range from 0.67 to 1.33 times the calculated horizontal deflection. As the SSP will in turn, be supporting future improvements, we believe that a maximum mid-point deflection criteria of 1.5 inches, or less, is desirable in order to maintain vertical deformations to 2 inches or less. The majority of the anticipated deflections are expected to occur once most of the backfilling behind the SSP has occurred prior to the SSP being fully restrained. On average, in order to achieve an overall FS of 1.5, a minimum embedment of 10 feet below the future design dredge depth elevation is required for all SSP to be installed for the subject project. The undersigned believes that due to the propensity for encountering obstructions, hot rolled SSP will be specified for the project.

5.5.2 SSP Restraint Design

The SSP will be restrained at regular intervals along its length using all-thread bars (i.e., tierods) secured to a pile supported concrete cap block. The tierod design was based on Post Tensioning Institute (PTI) recommendations for prestressed soil and rock anchors and assumes that for permanent construction, tierod loads shall be maintained at 60% of the guaranteed ultimate strength (GUTS) of the tierod. As the

DRAFT

SSP is regularly supported along its horizontal length, no wale is required. As previously mentioned elsewhere, the concrete cap blocks will be pile supported. In order to maximize skin friction and in turn, resist applied loadings, drilled in place piles will be used. Battered piles will be used to resist (at least in part) lateral loadings and horizontal components of moments created at the pile head from bollard loading. Remaining lateral loads will be resisted by the pile heads themselves. Piles installed for the project will generally consist of 10.75 in. dia., 0.5 in. thick-walled concrete filled pipe piles drilled into place.

5.6 Mooring Loads

Although mooring loads are typically quite complex requiring calculations using proprietary software, the type of ship being moored is typically known when such calculations are performed. In this case, in order to meet future operational requirements and still meet the project requirement of an unknown vessel with "a maximum vessel displacement of 1600 tons", more simplistic estimates of mooring loads were required to be performed using published guidelines. The undersigned believes that a more simplistic approach while adding an uncertainty factor to the design would be adequate provided that reasonable assumptions outlined in the applicable technical references is applied to the design.

Based on discussions with DAO (and documented in electronic correspondence), mooring bollards are to be designed for future operational needs assuming a vessel with a maximum operational displacement of 1600 tons. For simplicity the following assumptions were made:

- Maximum vessel displacement: 1600 t;
- Assumed maximum variation in wave height: 3 ft.;
- Calculated projected area of vessel above waterline: 1600 sf (calculated in CAD using a PDF of the vessel "Lake Explorer");
- Uncertainty factor: 33 percent (typically used for temporary increases in loads per ASCE 7-10);
- Maximum applied wind loading: Assume Type IIB storm mooring per UFC 4-159-03: 64 Knots;
- Shape Factor: 1.3 (see Design and Construction of Ports and Marine Structures" page 295);

5.6.1 Results

Based on the above information, a resulting wind pressure was calculated for the subject project which corresponded to a required mooring bollard capacity of 50T. To backcheck the calculation, another method was used to estimate mooring loading. This method consisting of backcalculating a load using ultimate chain strength and a corresponding recommended vessel size. If we assume conservatively that there is a minimum of 2 lines securing the vessel, a minimum design lateral load to be considered for each mooring post was generated. Note that an uncertainty factor of

DRAFT

33 percent was added to account for transient loadings that could temporarily increase the load on the mooring post. Maximum angles of pull used to generate lateral loading on the support piles were consistent with the bollard manufacturer's published recommendations.

5.7 Mooring Bollard Foundations

Overall, based on the new, higher, estimated mooring loads and lack of confidence in the ability of the existing subgrade soils within the piers to provide proper long term support of new foundations, new pile supported bollards is believed to be the best option for this project. Rather than using individual mooring foundations, the foundation upon which the bollards will be secured will be a continuous pile supported grade beam foundation extending along the outside perimeter of the pier. The piles will consist of drilled in place micropiles and the layout of the micropiles will be as such as to resist not only the lateral load from the SSP but also the applied mooring load at each mooring point. The purpose of the use of drilled in place micropiles is to maximize skin friction which will be substantially higher than what can be achieved with driven piles. Battered micropiles will be designed to resist all horizontal components of the applied load (both from the mooring bollard as well as the lateral resistance required for the SSP) to allow the vertical piles to be concerned with only the vertical component of the applied loads.

The concrete foundation was designed using the most current ACI standards for reinforced concrete design (ACI 318R). Drilled in place piles used to support the proposed grade beam (as well as to resist the applied loads from the bollards and the SSP) were designed using Federal Highway Administration (FWHA) methodology outlined in FHWA publication FHWA-SA-97-070 – "Micropile Design and Construction Guidelines", NAVFAC publication D7.01 as well as standard geotechnical engineering guidelines outlined in publicly available published works. At each bollard location, a set of four (4) piles will be installed to form a couple to resist the higher mooring loads to be applied. Intermediate supports consisting of a two pile set located at third points between the bollard pile caps will be constructed to primarily resist lateral loads from the SSP.

The design will assume a simple supported case where the member is pile supported at a regular interval along its length parallel to the pier/headwall face while considering the dead load of the member, a dead load surcharge applied to the top of the member, as well as the horizontal loading from the SSP restraints. A secondary calculation would also be performed where a maximum factored mooring load would be applied at a pile cap. Maximum design loads determined using these methods would be used to calculate the required flexural and shear reinforcement within the grade beam at the pile cap locations.

5.8 Infill Stone

For infill of the annulus between the new SSP and the existing structures, a clean, well graded aggregate is desired. In order to reduce ambiguity with respect to the requirement to determine and provide the successful Contractor gradations and provide an easily available material that is cost effective, MnDOT Class 1 riprap was selected as the proposed infill

DRAFT

material. To cap the infill material and to provide a working surface for the construction of concrete pavements, structural slabs and foundations, MnDOT 5Q aggregate is proposed to be used.

5.9 Proposed Ancillary Improvements

Proposed ancillary improvements generally consist of the installation of new electrical appurtenances such as charging stations, meter boxes and light poles where required as well as the installation of potable water piping. New fenAdering and associated hardware will also be installed which will be specified by DAO. Although some site concrete will be removed as part of the project, no site concrete will be replaced at this time.

DRAFT

Appendix B: Pier Repair & Improvement Plan Drawings

US Army Corps
of Engineers®
DETROIT DISTRICT

ST. LOUIS COUNTY
DULUTH, MN
FY19 DULUTH
VESSEL YARD REPAIRS

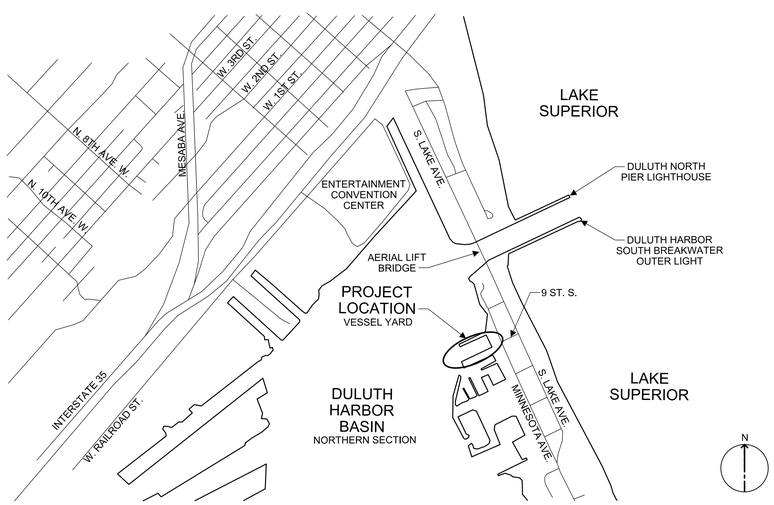

VESSEL YARD - VICINITY MAP
SCALE: 1" = 1000'

SOLICITATION NO.: W911XK##X00##
CONTRACT NO.:
ISSUE DATE: 22 MAY 2020

TIMOTHY C. SMITH P.E., CHIEF GEOTECHNICAL & STRUCTURES BRANCH

WILLIAM D. MERTE P.E., CHIEF COST & GENERAL ENGINEERING BRANCH

PHILLIP C. ROSS P.E., CHIEF ENGINEERING & CONSTRUCTION OFFICE

MARIE STRUM P.E., CHIEF ENGINEERING & TECHNICAL SERVICES

THE PROJECT WAS DESIGNED BY THE DETROIT DISTRICT OF THE U.S. ARMY CORPS OF ENGINEERS. THE INITIALS OR SIGNATURES AND REGISTRATION DESIGNATIONS OF INDIVIDUALS APPEAR ON THESE PROJECTS DOCUMENTS WITHIN THE SCOPE OF THEIR EMPLOYMENT AS REQUIRED BY ER 1110-1-8152

US Army Corps of Engineers®

MARK	DESCRIPTION	DATE

DESIGNED BY: M. DESJARDINS
DRAWN BY: B. KORZETZ
CHECKED BY:
SUBMITTED BY:
SIZE: ANSI D
ISSUE DATE: 22 MAY 2020
SOLICITATION NO.: W911XK##X00##
CONTRACT NO.:
PROJECT NUMBER: DS
FILENAME: DLVSLYARD_G-001.dgn

U.S. ARMY CORPS OF ENGINEERS
DETROIT DISTRICT
477 MICHIGAN AVE
DETROIT, MI 48226

VALUE ENGINEERING

ST. LOUIS COUNTY
DULUTH, MN
FY19 DULUTH
VESSEL YARD REPAIRS

COVER SHEET

SHEET ID
G-001

GENERAL NOTES

CONTRACT DRAWING INDEX

ID	DESCRIPTION
G-001	COVER SHEET
GI001	SHEET INDEX AND GENERAL NOTES
GI002	STANDARD ABBREVIATIONS
V-101	OVERALL EXISTING CONDITIONS
V-102	EXISTING CONDITIONS SOUTH PIER - EASTERLY END
V-103	EXISTING CONDITIONS SOUTH PIER - WESTERLY END
V-301	EXISTING CROSS SECTIONS
CD101	OVERALL DEMOLITION PLAN
CD102	SITE DEMOLITION PLAN SOUTH PIER EASTERLY END
CD103	SITE DEMOLITION PLAN SOUTH PIER WESTERLY END
CD301	SITE DEMOLITION CROSS SECTIONS
C-101	REQUIRED OVERALL SITE PLAN
C-102	REQUIRED CIVIL PLAN SOUTH PIER - EASTERLY END
C-103	REQUIRED CIVIL PLAN SOUTH PIER - WESTERLY END
C-301	REQUIRED CIVIL SECTIONS
C-501	REQUIRED CIVIL DETAILS
E-101	ELECTRICAL PLAN
E-110	LIGHTING PLAN
E-300	ELECTRICAL ONE-LINE
E-500	ELECTRICAL DETAILS
ED-101	EXISTING ELECTRICAL & DEMOLITION PLAN
ED-300	ELECTRICAL ONE-LINE DEMOLTION PLAN

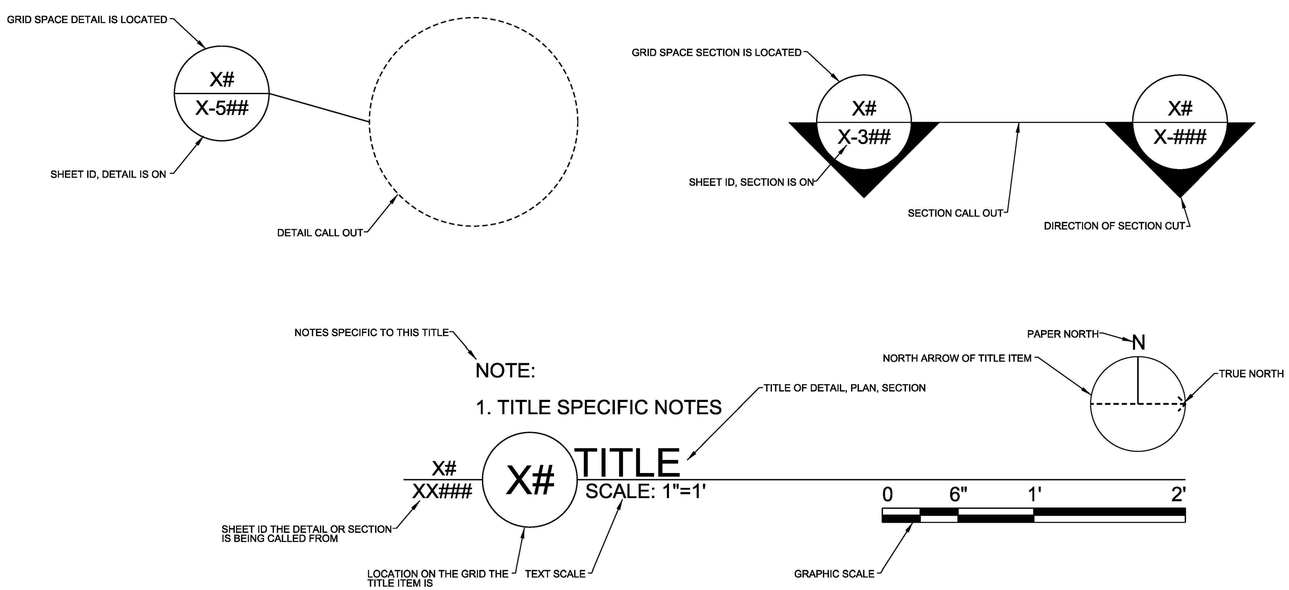

US Army Corps of Engineers®

MARK	DESCRIPTION	DATE

DESIGNED BY: M. DESJARDINS
DRAWN BY: B. KORZETZ
CHECKED BY:
SUBMITTED BY: PM
SIZE: ANSI D
ISSUE DATE: 22 MAY 2020
SOLICITATION NO.: W91YX##XX0##
CONTRACT NO.:
PROJECT NUMBER: DS
FILENAME: DLVSLYARD_GI001.dgn

U.S. ARMY CORPS OF ENGINEERS
DETROIT DISTRICT
477 MICHIGAN AVE
DETROIT, MI 48226

VALUE ENGINEERING

ST. LOUIS COUNTY
DULUTH, MN
FY19 DULUTH
VESSEL YARD REPAIRS

SHEET INDEX AND GENERAL NOTES

SHEET ID
GI001

ABBREVIATIONS

ABBREVIATION	MEANING
L	ANGLE
A/C	AIR CONDITIONING
A/C UNIT	AIR CONDITIONING UNIT
AB	ANCHOR BOLT
ABV	ABOVE
AC	ALTERNATING CURRENT
ACC	ACCESSIBLE
ACI	AMERICAN CONCRETE INSTITUTE
ACR	ACRYLIC PLASTIC
ACS DR	ACCESS DOOR
ACS PNL	ACCESS PANEL
ACSR	ALUMINUM CABLE STEEL REINFORCED
ACST	ACOUSTIC
ACT	ACOUSTICAL CEILING TILE
ADDM	ADDENDUM
ADH	ADHESIVE
ADJ	ADJACENT, ADJOINING, ADJUSTABLE
ADO	AUTOMATIC DOOR OPERATOR
AFF	ABOVE FINISHED FLOOR
AGGR	AGGREGATE
AHR	ANCHOR
AHU	AIR HANDLING UNIT
AI	AREA INLET
AIC	AMPERE INTERRUPTING CAPACITY
AISC	AMERICAN INSTITUTE OF STEEL CONSTRUCTION
A.L.	ACTIVE LEAF
ALT	ALTERNATE
ALUM	ALUMINUM
AMB	AMBIENT
AMP	AMPERE
ANOD	ANODIZE
ANSI	AMERICAN NATIONAL STANDARDS INSTITUTE
APPD	APPROVED
APPROX	APPROXIMATE
ARCH	ARCHITECT
ARI	AMERICAN REFRIGERATION INSTITUTE
ASB	ASBESTOS
ASC	ABOVE SUSPENDED CEILING
ASPH	ASPHALT
ATC	ACOUSTICAL TILE CEILING
AUTO	AUTOMATIC
AVG	AVERAGE
AWG	AMERICAN WIRE GAUGE
AWT	ACOUSTICAL WALL TREATMENT
BB	BULLETIN BOARD
BC	BOOKCASE
BD	BOARD
BDRY	BOUNDARY
BEJ	BRICK EXPANSION JOINT
BEV	BEVEL
BITUM	BITUMINOUS
BJT	BED JOINT
BL	BUILDING LINE
BLDG	BUILDING
BLW	BELOW
BM	BENCHMARK
BO	BOTTOM OF
BOT	BOTTOM
BP	BACK PLASTER(ED)
BRCG	BRACING
BRDG	BRIDGING
BRG	BEARING
BRG PL	BEARING PLATE
BRK	BRICK
BRKT	BRACKET
BRZ	BRONZE
BS	BOTH SIDES
BSMT	BASEMENT
Btu	BRITISH THERMAL UNIT
BtuH	BTU PER HOUR
BTWN	BETWEEN
BUR	BUILT-UP ROOFING
BW	BOTH WAYS
CAB	CABINET
CAP	CAPACITY
CB	CATCH BASIN
CCT	CUBICLE CURTAIN TRACK
CCTV	CLOSED CIRCUIT TELEVISION
CE	COVER ELEVATION
CEM	CEMENT
CEM PLAS	CEMENT PLASTER
CER	CERAMIC
CFI	CONDUCTIVE FLOORING
CFLG	COUNTERFLASHING
CFM	CUBIC FEET PER MINUTE
CG	CORNER GUARD
CH BD	CHALKBOARD
CHFR	CHAMFER
CHIM	CHIMNEY
CHK	CHECK
CHR PL	CHROME PLATED
CI	CAST IRON
CI	CURB INLET
CIP	CAST-IN-PLACE
CIRC	CIRCULAR
CJ	CONTROL JOINT
CJ	CONSTRUCTION JOINT
CKT	CIRCUIT
CKT BRKR	CIRCUIT BREAKER
CL	CENTER LINE
CLG	CEILING
CLG HT	CEILING HEIGHT
CLGL	CLEAR GLASS
CLL	CONTRACT LIMIT LINE
CLO	CLOSET
CLOS	CLOSURE
CLR	CLEAR(ANCE)
CLWG	CLEAR WIRED GLASS
cm	CENTIMETER(S)
CMP	CORRUGATED METAL PIPE
CMPST	COMPOSITE
CMU	CONCRETE MASONRY UNIT
CND	CONDUIT
CNL	CONDUCTIVE NEOPRENE LATEX
CNR	CORNER
CNTR	COUNTER
CO	CLEANOUT
CO2	CARBON DIOXIDE
COL	COLUMN
COM	COMMON
COMB	COMBUSTION
COMPT	COMPARTMENT
CONC	CONCRETE
CONN	CONNECT
CONSTR	CONSTRUCTION
CONT	CONTINUE
CONTR	CONTRACTOR
CORR	CORRIDOR
COV	COVER
CPRS	COMPRESSIBLE
CPT	CARPET
CRCMF	CIRCUMFERENCE
CRES	CORROSIVE RESISTANT STEEL
CRG	CROSS GRAIN
CRS	COURSE(S)
CS	CAST STONE
CSK	COUNTERSUNK
CSMT	CASEMENT
CT	CERAMIC TILE
CT	CURRENT TRANSFORMER
C TO C	CENTER TO CENTER
CTR	CENTER
CU	CONDENSING UNIT
Cu	COPPER
CU FT	CUBIC FEET
CUH	CABINET UNIT HEATER
CU YD	CUBIC YARDS
CV	CEILING VENT
CVH	CONDUCTIVE VINYL HOMOGENEOUS (SHEET TYPE)
CW	COLD WATER
CYL	CYLINDER
d	PENNY (AS IN NAIL - 10D)
DAT	DATUM
DB	DRY BULB
DBL	DOUBLE
DBL ACT DR	DOUBLE ACTING DOOR
DCJ	DOWELED CONTROL JOINT
DCJT	DUMMY CONTROL JOINT
DEG	DEGREE
DEMO	DEMOLITION
DEPR	DEPRESSION
DEPT	DEPARTMENT
DET	DETAIL
DF	DRINKING FOUNTAIN
DH	DOUBLE HUNG
DH	DUCT HEATER
DIA	DIAMETER
DIAG	DIAGONAL
DIM	DIMENSION
DISC	DISCONNECT
DISP	DISPENSER
DISTR PNL	DISTRIBUTION PANEL
DIV	DIVISION
DL	DEAD LOAD
DMPF	DAMPPROOFING
DMPR	DAMPER
DMT	DEMOUNTABLE
DN	DOWN
DR	DOOR
DR	DRAIN
DRB	DRAINBOARD
DR CL	DOOR CLOSER
DS	DOUBLE STRENGTH (GLASS)
DS	DOWNSPOUT
DT	DRAIN TILE
DVTL	DOVETAIL
DWG	DRAWING
DWLS	DOWELS
DWR	DRAWER
DWTR	DUMBWAITER
DX	DIRECT EXPANSION
E	EAST
EA	EACH
EAT	ENTERING AIR TEMPERATURE
EF	EACH FACE
EJ	EXPANSION JOINT
EL	ELEVATION - GRADE OR BUILDING
ELEC	ELECTRIC
EM	EXPANDED METAL
EMD	ESTIMATED MAXIMUM DEMAND
EMER	EMERGENCY
ENCL	ENCLOSE(URE)
ENTR	ENTRANCE, ENTERING
EP	ELECTRICAL PANELBOARD
EPRF	EXPLOSION PROOF
EPY	EPOXY COATING
EQ	EQUAL
EQUIP	EQUIPMENT
ESCAL	ESCALATOR
EST	ESTIMATE(D)
EWC	ELECTRIC WATER COOLER
EWT	ENTERING WATER TEMPERATURE
EXC	EXCAVATE
EXH	EXHAUST
EXH A	EXHAUST AIR
EXST	EXISTING
EXP	EXPANSION
EXP	EXPOSED
EXP BT	EXPANSION BOLT
EXT	EXTERIOR
F	FAHRENHEIT
FA	FIRE ALARM
FA	FRESH AIR
FAC	FIRE APPARATUS CLOSET
FAI	FRESH AIR INTAKE
F BRK	FIRE BRICK
FC	FOOT CANDLE
FC BRK	FACE BRICK
FCG	FACING
FCJ	FLOOR CONSTRUCTION JOINT
FCO	FLOOR CLEANOUT
FCU	FAN COIL UNIT
FD	FLOOR DRAIN
FDMPR	FIRE DAMPER
FDTN	FOUNDATION
FE	FIRE EXTINGUISHER
FEB	FIRE EXTINGUISHER BRACKET
FEC	FIRE EXTINGUISHER CABINET
FF	FACTORY FINISH
FGL	FIBERGLASS
FH	FIRE HYDRANT
FH	FLAT HEAD
FHC	FIRE HOSE CABINET
FHMS	FLAT HEAD MACHINE SCREW
FHR	FIRE HOSE RACK
FHS	FIRE HOSE STATION
FHWS	FLAT HEAD WOOD SCREW
FIG	FIGURE
FIN	FINISH
FIN FLR	FINISH FLOOR
FIXT	FIXTURE
FJT	FLUSH JOINT
FLASH	FLASHING
FLR	FLOOR
FLEX	FLEXIBLE
FLG	FLOORING
FLR PL	FLOOR PLATE
FLUOR	FLUORESCENT
FN	FENCE
FOC	FACE OF CONCRETE
FOF	FACE OF FINISH
FOM	FACE OF MASONRY
FOS	FACE OF STUD
FP	FIRE PARTITION
FP	FIREPROOF
FPM	FEET PER MINUTE
FR	FIRE RESISTANT
FR	FRAME
FRG	FORGED
FRMG	FRAMING
FRT	FIRE-RETARDANT
FS	FULL SIZE
FSTNR	FASTEN(ER)
FT	FEET
FTG	FOOTING
FURG	FURRING
FUT	FUTURE
FW	FIRE WATER
FWC	FABRIC WALL COVERING
G	NATURAL GAS
GA	GAGE
GAL	GALLON(S)
GALV	GALVANIZED
GALV STL	GALVANIZED STEEL
GB	GRAB BAR
GC	GENERAL CONTRACTOR
GEN	GENERAL
GF	GROUND FACE
GFCI	GROUND FAULT CIRCUIT INTERRUPTER
GFE	GOVERNMENT-FURNISHED EQUIPMENT
GFE/CI	GOVERNMENT-FURNISHED EQUIPMENT CONTRACTOR INSTALLED
GI	GALVANIZED IRON
GIP	GALVANIZED IRON PIPE
GKT	GASKET(ED)
GL	GLASS
GL BLK	GLASS BLOCK
GLF	GLASS FIBER
GLZ	GLAZING
GLZ CMU	GLAZED CONCRETE MASONRY UNITS
G	GROUND
GOVT	GOVERNMENT
GPM	GALLONS PER MINUTE
GPT	GYPSUM TILE
GRAN	GRANITE
GR LN	GRADE LINE
GRTG	GRATING
GST	GLAZED STRUCTURAL TILE
GSU	GLAZED STRUCTURAL UNITS
GT	GROUT
GWT	GLAZED WALL TILE
GYP	GYPSUM
GYP BD	GYPSUM BOARD
GYP PLAS	GYPSUM PLASTER
HB	HOSE BIBB
HC	HOLLOW CORE
HCD	HALON CONTAINMENT DAMPER
HCP	HANDICAPPED
HD	HEAD
HD	HEAVY DUTY
HDBD	HARDBOARD
HD JT	HEAD JOINT
HDR	HEADER
HDW	HARDWARE
HDWD	HARDWOOD
HES	HIGH EARLY-STRENGTH CEMENT
HEX	HEXAGON
HH	HANDHOLE
HK	HOOK(S)
HM	HOLLOW METAL
HNDRL	HANDRAIL
HORIZ	HORIZONTAL
HP	HIGH PRESSURE
HP	HORSEPOWER
HPT	HIGH POINT
HR	HOUR
HS	HIGH STRENGTH
HSGYP	HIGH-STRENGTH GYPSUM PLASTER
HSKPG	HOUSEKEEPING
HT	HEIGHT
HTG	HEATING
HTR	HEATER
HVAC	HEATING, VENTILATING AND AIR CONDITIONING
HYDR	HYDRAULIC
Hz	HERTZ
IC	INTERCOM
ID	INSIDE DIAMETER
IESNA	ILLUMINATING ENGINEERING SOCIETY OF NORTH AMERICA
ILK	INTERLOCK
IN	INCH
INCIN	INCINERATOR
INCL	INCLUDED
INSF	INSULATING FILL
INSUL	INSULATION
INT	INTERIOR
INTM	INTERMEDIATE
INV	INVERT
IP	IRON PIPE
IPS	IRON PIPE SIZE
I.P.S.	INSIDE PIPE SIZE
JAN CLO	JANITOR'S CLOSET
J-BOX	JUNCTION BOX
JCT	JUNCTION
JST	JOIST
JT	JOINT
KIP	KILOPOUND (1000 POUNDS)
KIT	KITCHEN
KOP	KNOCKOUT PANEL
KPL	KICKPLATE
km	KILOMETER
kV	KILOVOLTS
kVA	KILOVOLT AMPERES
kVAR	KILOVOLT AMPERES REACTIVE
kW	KILOWATT
KWY	KEYWAY
LAB	LABORATORY
LAD	LADDER
LAM	LAMINATE
LAT	LEAVING AIR TEMPERATURE
LAU	LAUNDRY
LAV	LAVATORY
LB	LAG BOLT
LB	POUND
LBL	LABEL
LBR	LUMBER
LC	LIGHT CONTROL
LD	LOAD
LDG	LOADING
LG	LENGTH
LH	LEFT HAND(ED)
LIN	LINEAR
LKR	LOCKER
LL	LIVE LOAD
LLD	LEAD-LINED DOOR
LM	LUMEN
LMST	LIMESTONE
LNTL	LINTEL
LONG	LONGITUDINAL
LP	LIGHTPROOF
LPD	LIGHTPROOF DOOR
LPL	LIGHTPROOF LOUVER
LPT	LOW POINT
LR	LIVING ROOM
LS	LAWN SPRINKLER
LT	LIGHT
LT WT	LIGHTWEIGHT
LTG	LIGHTING
LTNG	LIGHTNING
LVR	LOUVER
LWC	LIGHTWEIGHT CONCRETE
LWT	LEAVING WATER TEMPERATURE
m	METER(S)
M&B	MATCHED AND BEADED
MACH	MACHINE
MAS	MASONRY
MATL	MATERIAL(S)
MAX	MAXIMUM
MB	MACHINE BOLTS
MBR	MEMBER
MC	MEDICINE CABINET
MCJ	MASONRY CONTROL JOINT
MCO	METAL-CASED OPENING
MDS	METAL DIVIDER STRIP
MECH	MECHANICAL
MECH RM	MECHANICAL ROOM
MED	MEDIUM
MEMB	MEMBRANE
MES	METAL EDGE STRIP
MFD	METAL FLOOR DECKING
MFG	MANUFACTURING
MFR	MANUFACTURER
MG	MOTOR GENERATOR
MGT	MATTE-GLAZED TILE
MH	MANHOLE
MI	MALLEABLE IRON
MIN	MINIMUM
MIRR	MIRROR
MISC	MISCELLANEOUS
ML	METAL LATH
ML	MONOLITHIC
MLDG	MOULDING
MLWK	MILLWORK
mm	MILLIMETER(S)
MNIC	MATERIAL NOT IN CONTRACT (INSTALLATION BY CONTRACTOR)
MO	MASONRY OPENING
MOD	MODULAR
MOD.	MODIFIED
MOT	MOTOR
MP	MOVABLE PARTITION
MR	MOP RECEPTOR
MRB	MARBLE BASE
MRD	METAL ROOF DECKING
MS	MACHINE SCREWS
MT	METAL THRESHOLD
MT	MOUNT
MTD	MOUNTED
MTFR	METAL FURRING
MTL	METAL
MVBL	MOVABLE
MULL	MULLION
N	NORTH
NAT	NATURAL
NC	NORMALLY CLOSED
NEC	NATIONAL ELECTRICAL CODE
NEMA	NATIONAL ELECTRICAL MANUFACTURERS ASSOCIATION
NFPA	NATIONAL FIRE PROTECTION ASSOCIATION
Ni	NICKEL
NIC	NOT IN CONTRACT
NL	NAILABLE
N.L.	NEOPRENE LATEX
NM	NONMETALLIC
NO	NORMALLY OPEN
NO	NUMBER
NOM	NOMINAL
NR	NOISE REDUCTION
NRC	NOISE REDUCTION COEFFICIENT
N'REQD	NOT REQUIRED
NTS	NOT TO SCALE
OA	OUTSIDE AIR
OBSC	OBSCURE
OBW	OBSERVATION WINDOW
OC	ON CENTER
OCEW	ON CENTER EACH WAY
OD	OUTSIDE DIAMETER
OFC	OFFICE
OGL	OBSCURE GLASS
OH	OVERHEAD
OHMS	OVALHEAD MACHINE SCREW
OHWS	OVALHEAD WOOD SCREW
OPH	OPPOSITE HAND
OPNG	OPENING
OPP	OPPOSITE
OPQ	OPAQUE
OPS	OPERATIONS
OS & Y	OUTSIDE SCREW AND YOKE
OWGL	OBSCURE WIRED GLASS
P	POLE
PA	PUBLIC ADDRESS
PAR	PARALLEL
PB	PANIC BAR
PBD	PARTICLE BOARD
PBS	PUSH BUTTON STATION
PC	PIECE
PCC	PRECAST CONCRETE
PCF	POUNDS PER CUBIC FOOT
PCP	CEMENT PLASTER (PORTLAND)
PD	PAVEMENT DRAIN
PED	PEDESTAL
PERF	PERFORATE(D)
PERIM	PERIMETER
PH	PHASE
PHAR	PHARMACY
PI	POINT OF INTERSECTION
PIPU	PREFAB ISOLATION POWER UNIT
PIV	POST INDICATING VALVE
PL	PLATE
PL	PROPERTY LINE
PLAM	PLASTIC LAMINATE
PLAS	PLASTER
PLAT	PLATFORM
PLBG	PLUMBING
PLF	POUNDS PER LINEAR FOOT
PLG	PILING
PL GL	PLATE GLASS
PLYWD	PLYWOOD
PNL	PANEL
PT	PAINT(ED)
POL	POLISHED
PORC	PORCELAIN
PORT	PORTABLE
PPGL	POLISHED PLATE GLASS
PPM	PARTS PER MILLION
PR	PAIR
PREFAB	PREFABRICATE(D)
PREFIN	PREFINISHED
PREFMD	PREFORMED
PRKG	PARKING
PROJ	PROJECT
PRV	PRESSURE-REGULATING VALVE
PS	PIPE SPACE
P.S.	PRESSED STEEL
PS CONC	PRESTRESSED CONCRETE
PSF	POUNDS PER SQUARE FOOT
PSI	POUNDS PER SQUARE INCH
PT	PNEUMATIC TUBE
PT.	POINT
PT CONC	POST-TENSIONED CONCRETE
PTD	PAPER TOWEL DISPENSER
PTN	PARTITION
PTR	PAPER TOWEL RECEPTACLE
PV	PAVED
PVC	POLYVINYL CHLORIDE
PVG	PAVING
PW	PASS WINDOW
QT	QUARRY TILE
QT.	QUART
QTR	QUARTER
1/4 RND	QUARTER ROUND
QTY	QUANTITY
R	RADIUS
R	RANGE
R	RISER
RA	RETURN AIR
RAB	RABBETED
RA GR	RETURN AIR GRILLE
RAR	RETURN AIR REGISTER
RB	RUBBER BASE, RESILIENT BASE
RBL	RUBBLE STONE
RBR	RUBBER
RC	REMOTE CONTROL
RCP	REINFORCED CONCRETE PIPE
RCVR	RECEIVER
RD	ROOF DRAIN
RDG INS	RIGID INSULATION
RECPT	RECEPTACLE
REC ROOM	RECREATION ROOM
RECT	RECTIFIER
REF	REFERENCE
REFL	REFLECT
REFR	REFRIGERATION
REG	REGISTER
REG	REGLET
REINF	REINFORCE
REM	REMOVE(ABLE)
REQD	REQUIRED
RESIL	RESILIENT
RET	RETURN
REV	REVISION
RFG	ROOFING
RH	RELATIVE HUMIDITY
RH	RIGHT HAND
RH	ROOF HATCH
RK	RACK
RLG	RAILING
RM	ROOM
RND	ROUND
RO	ROUGH OPENING
ROW	RIGHT OF WAY
RP	RETRACTABLE PARTITION
RPM	REVOLUTIONS PER MINUTE
RPRT	RAISED PATTERN RUBBER TILE
RTF	RUBBER TILE FLOOR
RVS	REVERSE
RVT	RIVET
RWC	RAINWATER CONDUCTOR
S	SOUTH
SA	SUPPLY AIR
SB	SPLASH BLOCK
S.B.	SECURITY BARS
SC	SOLID CORE
SCHED	SCHEDULE
SCRN	SCREEN
SCT	STRUCTURAL CLAY TILE
SD	STORM DRAIN
SDI	STEEL DOOR INSTITUTE
SECT	SECTION
SEQ	SEQUENCE
SFGL	SAFETY GLASS
SFTU	STRUCTURAL FACING TILE UNIT
SFU	STRUCTURAL FACING UNIT
SG	SHEET GLASS
SHLDR	SHOULDER
SHT	SHEET
SHTHG	SHEATHING
SHV	SHELVING
SIM	SIMILAR
SJI	STEEL JOIST INSTITUTE
SKLT	SKYLIGHT
SLNT	SEALANT
SLV	SLEEVE
SM	SHEET METAL
SMS	SHEET METAL SCREWS
SOV	SHUT OFF VALVE
SPC	SPACER
SPCL	SPECIAL
SPD	SOUNDPROOF DOOR
SPEC	SPECIFICATION
SPF	SOUNDPROOF
SP FIN	SPECIAL FINISH
SPH	SPACE HEATER
SPKR	SPEAKER
SQ	SQUARE
SQHD	SQUARE HEAD
S&R	SHELF AND ROD
SS	SERVICE SINK
SS	STANDING SEAM (ROOF)
SST	STAINLESS STEEL
STA	STATION
STD	STANDARD
STG	SEATING
STL	STEEL
STOR	STORAGE
ST PR	STATIC PRESSURE
STR	STRINGER
STRUCT	STRUCTURAL
STWY	STAIRWAY
SUB FL	SUBFLOOR
SUSP	SUSPENDED
SV	SHEET VINYL
SW	SWITCH
SWBD	SWITCHBOARD
SYMM	SYMMETRICAL
SYNTH	SYNTHETIC
SYS	SYSTEM
T	TREAD
TAN	TANGENT
TB	TOWEL BAR
TC	TERRA COTTA
TEL	TELEPHONE
TEMP	TEMPERATURE
TEMP	TEMPORARY
TER	TERRAZZO
TERM	TERMINAL
T&G	TONGUE AND GROOVE
TGL	TOGGLE
TH	TRUSS HEAD
THK	THICK(NESS)
THRES	THRESHOLD
TK BD	TACKBOARD
TKS	TACKSTRIP
TO	TOP OF
TOL	TOLERANCE
TOPO	TOPOGRAPHY
TOS	TOP OF SLAB
TOS	TOP OF STEEL
TOW	TOP OF WALL
TPD	TOILET PAPER DISPENSER
TPTN	TOILET PARTITION
TRANS	TRANSOM
TRANS	TRANSVERSE
TSTAT	THERMOSTAT
TV	TELEVISION
TYP	TYPICAL
UC	UNIT COOLER
UGND	UNDERGROUND
UH	UNIT HEATER
UL	UNDERWRITERS LABORATORIES
UNEX	UNEXCAVATED
UNFIN	UNFINISHED
UPS	UNINTERRUPTABLE POWER SUPPLY
UR	URINAL
UTIL	UTILITY
UV	UNIT VENTILATOR
V	VOLT
VAR	VARNISH
VB	VINYL BASE
VCT	VINYL COMPOSITION TILE
VCT	VITRIFIED CLAY TILE
VD	VAULT DOOR
VENT	VENTILATOR(TION)
VERT	VERTICAL
VEST	VESTIBULE
VF	VINYL FABRIC
VG	VERTICAL GRAIN
VH	VINYL HOMOGENEOUS
VJ	V-JOINT(ED)
VNR	VENEER
VOL	VOLUME
VR	VAPOR RETARDER
VRM	VERMICULITE
VS	VENT STACK
V.T.	VOLTAGE TRANSFORMER
VTR	VENT THRU ROOF
VWC	VINYL WALL COVERING
W	WEST
W/	WITH
WB	WET BULB
WBL	WOOD BLOCKING
WC	WATER CLOSET
W/C	WHEELCHAIR
WCO	WOOD-CASED OPENING
WD	WOOD
WD	WOOD DOOR
WDSP	WASTE DISPOSER
WDW	WINDOW
WF	WIDE FLANGE
WGL	WIRED GLASS
WH	WALL HUNG
WH	WATER HEATER
WHB	WHEEL BUMPER
WHM	WATT-HOUR METER
WI	WROUGHT IRON
WKSH	WORK SHOP
WM	WIRE MESH
W/O	WITHOUT
WP	WATERPROOF(ING)
WP	WEATHERPROOF
WP	WORKING POINT
WR	WASTE RECEPTACLE
WRB	WARDROBE
WS	WATERSTOP
W.S.	WASTE STACK
WSCT	WAINSCOT
WT	WEIGHT
WTH	WIDTH
W/W	WALL TO WALL
WWF	WELDED WIRE FABRIC
WWM	WELDED WIRE MESH
WWR	WELDED WIRE REINFORCEMENT
XFMR	TRANSFORMER
YD	YARD
YD	YARD DRAIN

US Army Corps of Engineers®

MARK	DESCRIPTION	DATE

DESIGNED BY: M. DESJARDINS
DRAWN BY: B. KORZETZ
CHECKED BY:
SUBMITTED BY: ??
SIZE: ANSI D
ISSUE DATE: 22 MAY 2020
SOLICITATION NO.: W911XK##X00##
CONTRACT NO.:
PROJECT NUMBER: DS
FILENAME: DLVSLYARD_GI002.dgn

U.S. ARMY CORPS OF ENGINEERS
DETROIT DISTRICT
477 MICHIGAN AVE
DETROIT, MI 48226

ST. LOUIS COUNTY
DULUTH, MN
FY19 DULUTH
VESSEL YARD REPAIRS

STANDARD ABBREVIATIONS

SHEET ID
GI002

...\Active Projects\OM-Duluth, MM (476605)-FY19 Vessel Yard Repairs\3 - CADD\CAD_BIM_Sheets\
4:20:30 PM 5/20/2020 PD: LRE_pdf.pltcfg DS: LRE_Screen.dscript.dscript

65% BCOES REVIEW

DULUTH HARBOR BASIN

GENERAL NOTES

1. NOTE 1
2. NOTE 2
3. NOTE 3

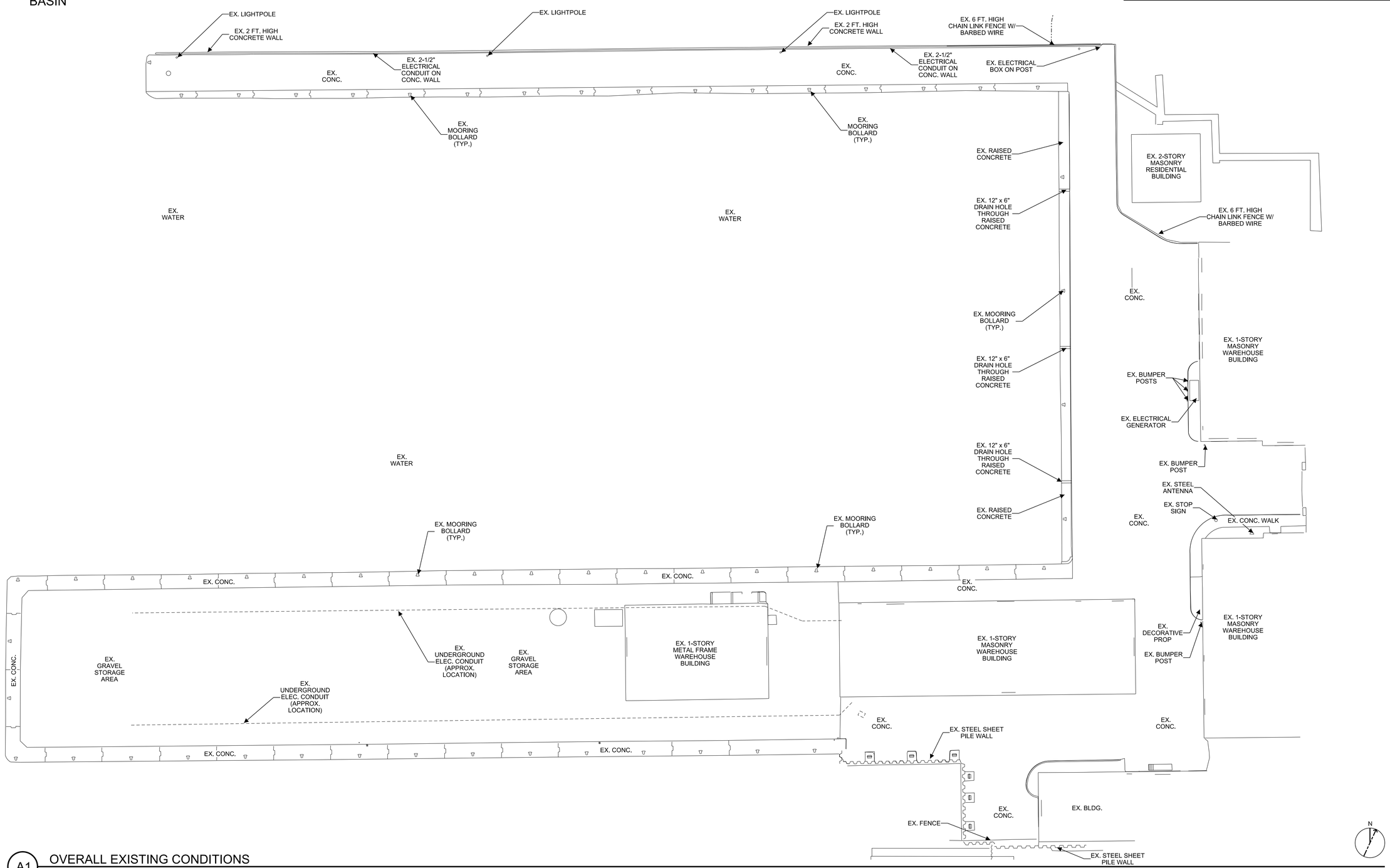

A1 OVERALL EXISTING CONDITIONS

SCALE: 1= 20'

US Army Corps of Engineers®

MARK	DESCRIPTION	DATE

DESIGNED BY: M. DESJARDINS
DRAWN BY: B. KORZETZ
CHECKED BY:
SUBMITTED BY:
SIZE: ANSI D
ISSUE DATE: 22 MAY 2020
SOLICITATION NO.: W911XK##X00##
CONTRACT NO.:
PROJECT NUMBER: DS
FILENAME: DLUSLYARD_V-101.dgn

U.S. ARMY CORPS OF ENGINEERS
DETROIT DISTRICT
477 MICHIGAN AVE
DETROIT, MI 48226

VALUE ENGINEERING

ST. LOUIS COUNTY
DULUTH, MN
FY19 DULUTH
VESSEL YARD REPAIRS

OVERALL EXISTING CONDITIONS PLAN

SHEET ID

V-101

...\Active Projects\OM-Duluth, MM (476605)-FY19 Vessel Yard Repairs\3 - CADD\CAD_BIM_Sheets\
4:22:24 PM 5/20/2020 PD: LRE_pdf.pltcfg DS: LRE_Screen.dscript.dscript

65% BCOES REVIEW

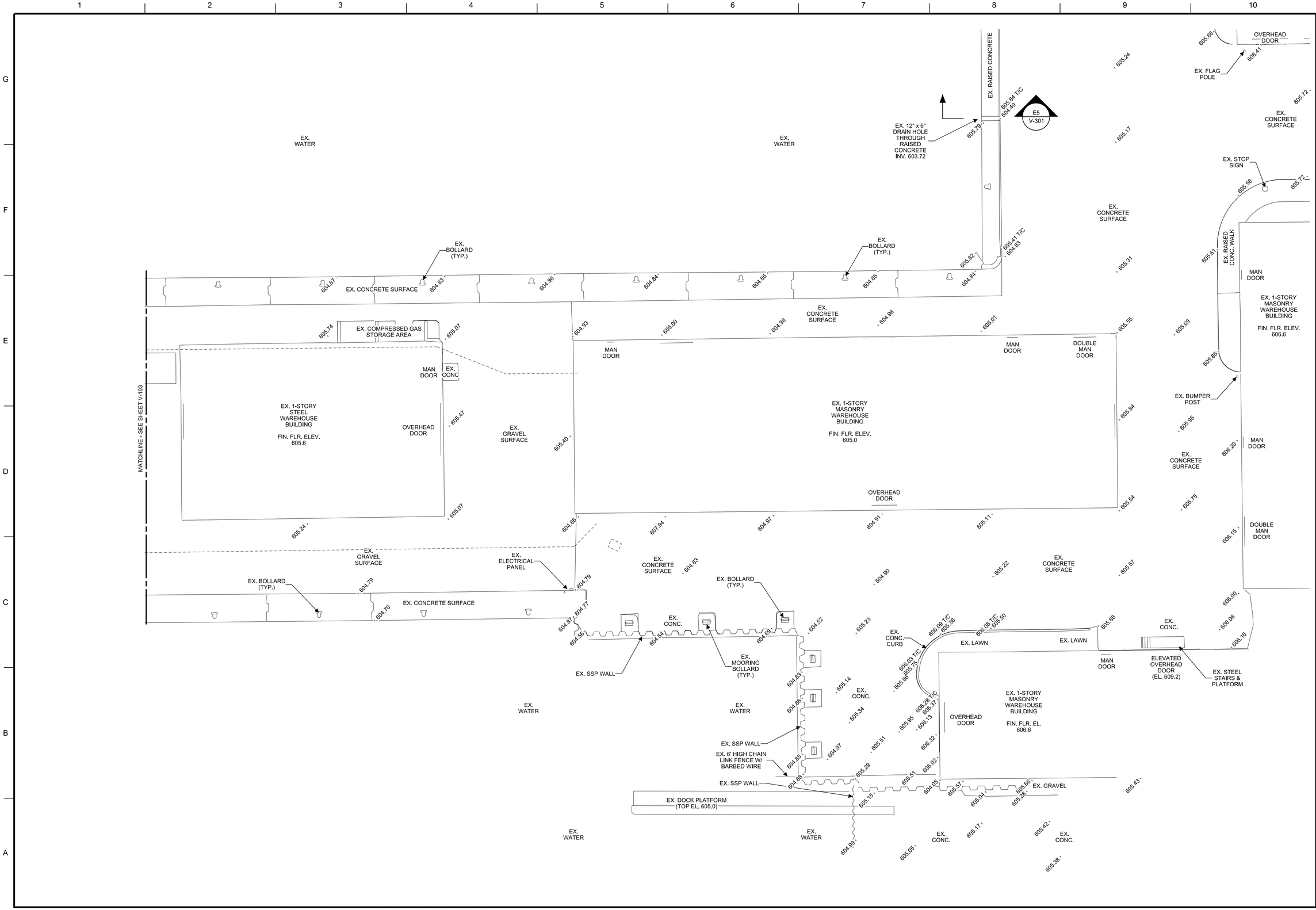

US Army Corps of Engineers®

MARK	DESCRIPTION	DATE

DESIGNED BY: M. DESJARDINS
DRAWN BY: B. KORZETZ
CHECKED BY:
SUBMITTED BY:
SIZE: ANSI D
ISSUE DATE: 22 MAY 2020
SOLICITATION NO.: W911XK##X00###
CONTRACT NO.:
PROJECT NUMBER: DS
FILENAME: DLVSLYARD_V-102.dgn

U.S. ARMY CORPS OF ENGINEERS
DETROIT DISTRICT
477 MICHIGAN AVE
DETROIT, MI 48226

ST. LOUIS COUNTY
DULUTH, MN
FY19 DULUTH
VESSEL YARD REPAIRS

EXISTING CONDITIONS
SOUTH PIER - EASTERLY END

SHEET ID
V-102

...\Active Projects\OM-Duluth, MM (476605)-FY19 Vessel Yard Repairs\3 - CADD\CAD_BIM_Sheets\
4:24:32 PM 5/20/2020 PD: LRE_pdf.pltcfg DS: LRE_Screen.dscript.dscript

65% BCOES REVIEW

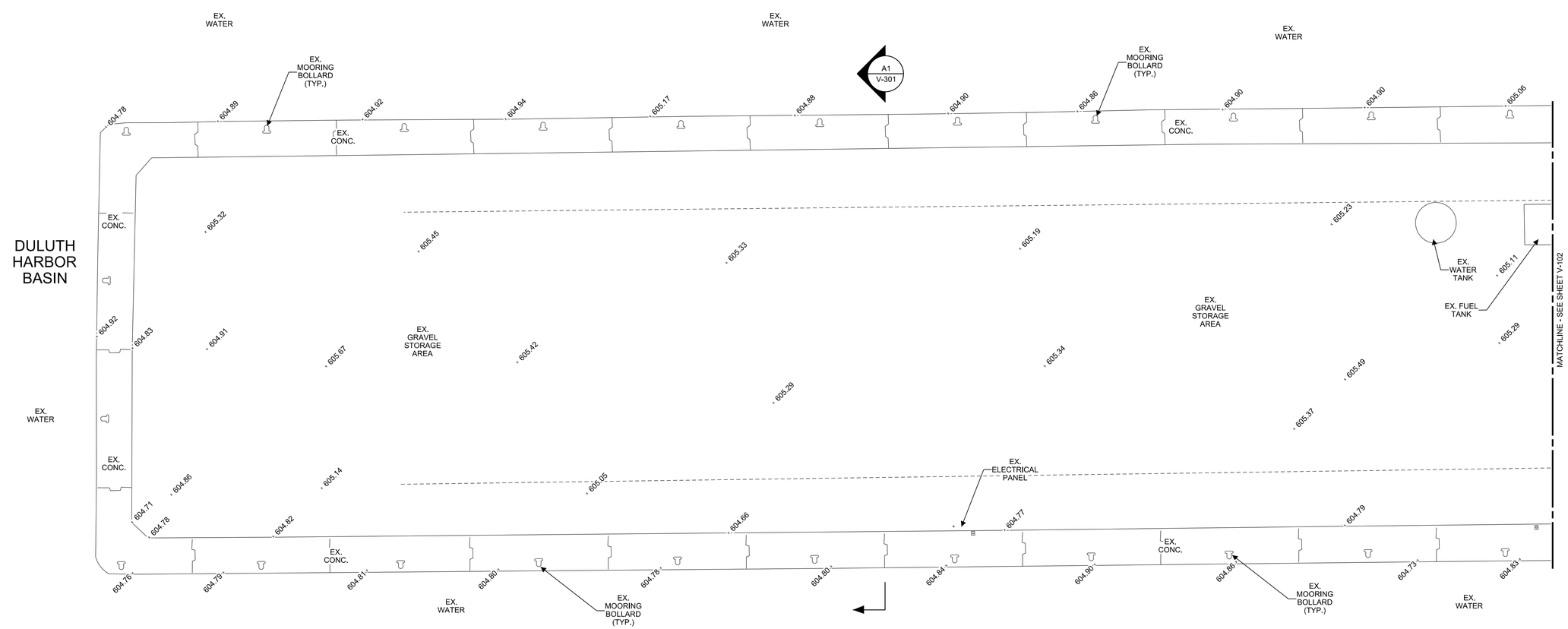

US Army Corps of Engineers®

MARK	DESCRIPTION	DATE

DESIGNED BY: M. DESJARDINS	ISSUE DATE: 22 MAY 2020
DRAWN BY: B. KORZETZ	SOLICITATION NO.: W911XK##X00##
CHECKED BY:	CONTRACT NO.:
SUBMITTED BY:	PROJECT NUMBER: DS
SIZE: ANSI D	FILENAME: DLVSLYARD_V-103.dgn

U.S. ARMY CORPS OF ENGINEERS
DETROIT DISTRICT
477 MICHIGAN AVE
DETROIT, MI 48226

VALUE ENGINEERING

ST. LOUIS COUNTY
DULUTH, MN
FY19 DULUTH
VESSEL YARD REPAIRS

EXISTING CONDITIONS
SOUTH PIER - WESTERLY END

SHEET ID

V-103

...\Active Projects\OM-Duluth, MM (476605)-FY19 Vessel Yard Repairs\3 - CADD\CAD_BIM_Sheets\
4:26:17 PM 5/20/2020 PD: LRE_pdf.pltcfg DS: LRE_Screen.dscript.dscript

65% BCOES REVIEW

GENERAL NOTES

1. NOTE 1
2. NOTE 2
3. NOTE 3

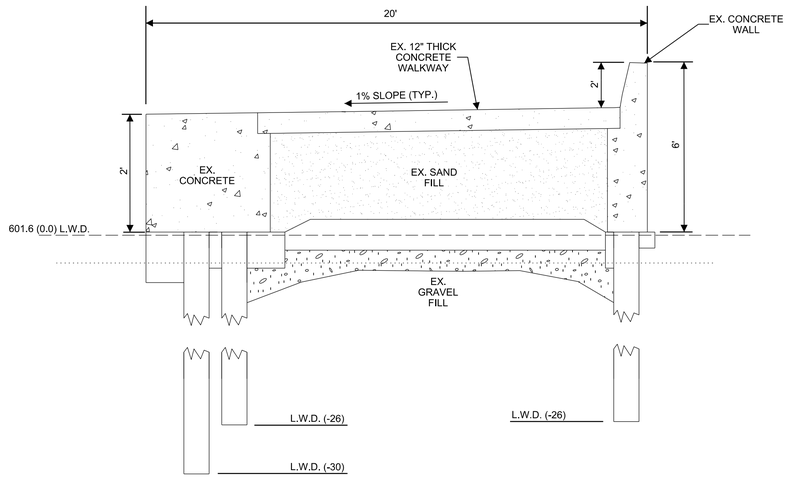

E1 EXISTING NORTH PIER CROSS SECTIONS
SCALE: 1" = 3'

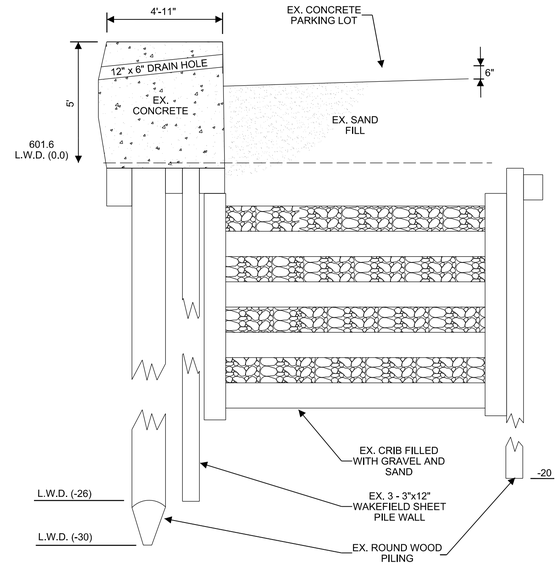

E5 EXISTING PIERHEAD CROSS SECTION
SCALE: 1" = 3'

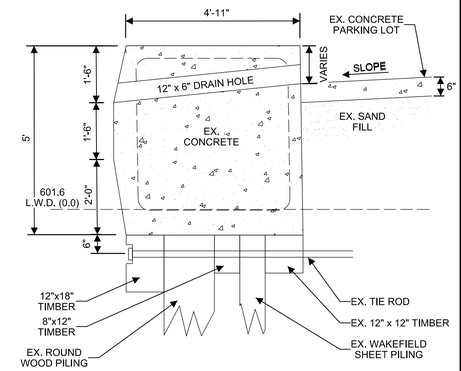

E9 EX. DRAIN HOLE CROSS SECTION
SCALE: 1" = 2'

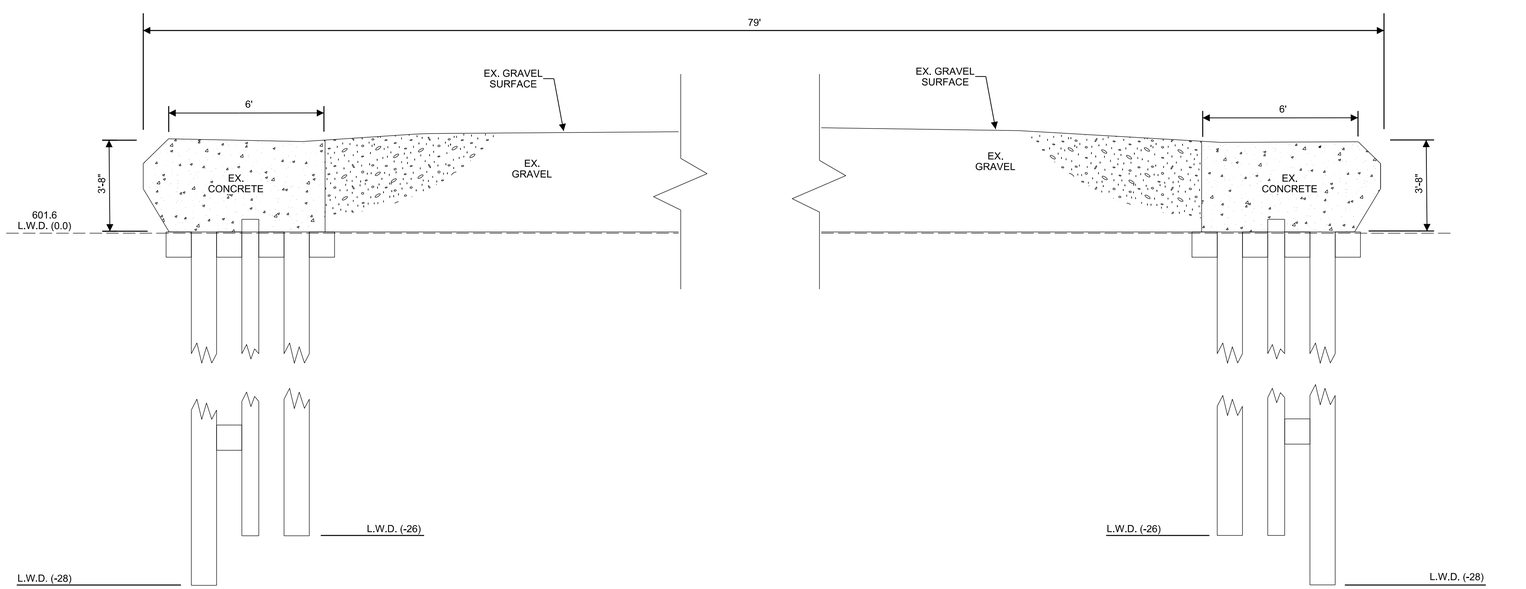

A1 EXISTING CROSS SECTION - SOUTH PIER
SCALE: 1" = 3'

US Army Corps of Engineers®

MARK	DESCRIPTION	DATE

DESIGNED BY: M. DESJARDINS
DRAWN BY: B. KORZETZ
CHECKED BY:
SUBMITTED BY: ST
SIZE: ANSI D
ISSUE DATE: 22 MAY 2020
SOLICITATION NO.: W911XK##X00##
CONTRACT NO.:
PROJECT NUMBER: DS
FILENAME: DLVSLYARD_V-301.dgn

U.S. ARMY CORPS OF ENGINEERS
DETROIT DISTRICT
477 MICHIGAN AVE
DETROIT, MI 48226

VALUE ENGINEERING

ST. LOUIS COUNTY
DULUTH, MN
FY19 DULUTH
VESSEL YARD REPAIRS

EXISTING CROSS SECTIONS

SHEET ID
V-301

65% BCOES REVIEW

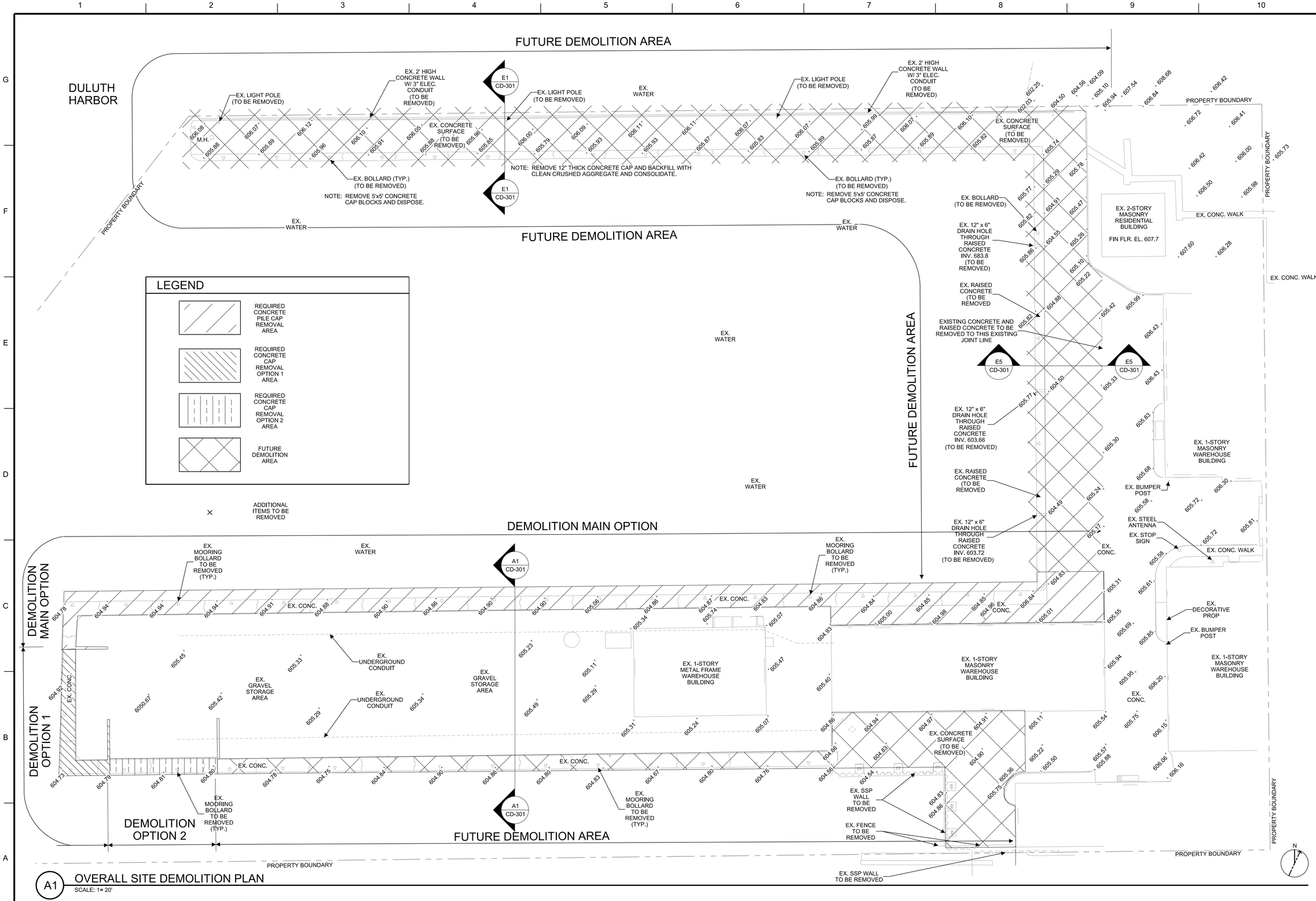

A1 OVERALL SITE DEMOLITION PLAN
SCALE: 1= 20'

...\Active Projects\OM-Duluth, MM (476605)-FY19 Vessel Yard Repairs\3 - CADD\CAD_BIM_Sheets\
11:23:28 AM 5/21/2020 PD: LRE_pdf.pltcfg DS: LRE_Screen.dscript.dscript

65% BCOES REVIEW

US Army Corps of Engineers®

MARK	DESCRIPTION	DATE

DESIGNED BY: M. DESJARDINS
DRAWN BY: B. KORZETZ
CHECKED BY:
SUBMITTED BY:
SIZE: ANSI D
FILENAME: DLVSLYARD_CD101.dgn
ISSUE DATE: 22 MAY 2020
SOLICITATION NO.: W911XK##X0##
CONTRACT NO.:
PROJECT NUMBER: DS

U.S. ARMY CORPS OF ENGINEERS
DETROIT DISTRICT
477 MICHIGAN AVE
DETROIT, MI 48226

ST. LOUIS COUNTY
DULUTH, MN
FY19 DULUTH
VESSEL YARD REPAIRS

OVERALL DEMOLITION PLAN

SHEET ID
CD101

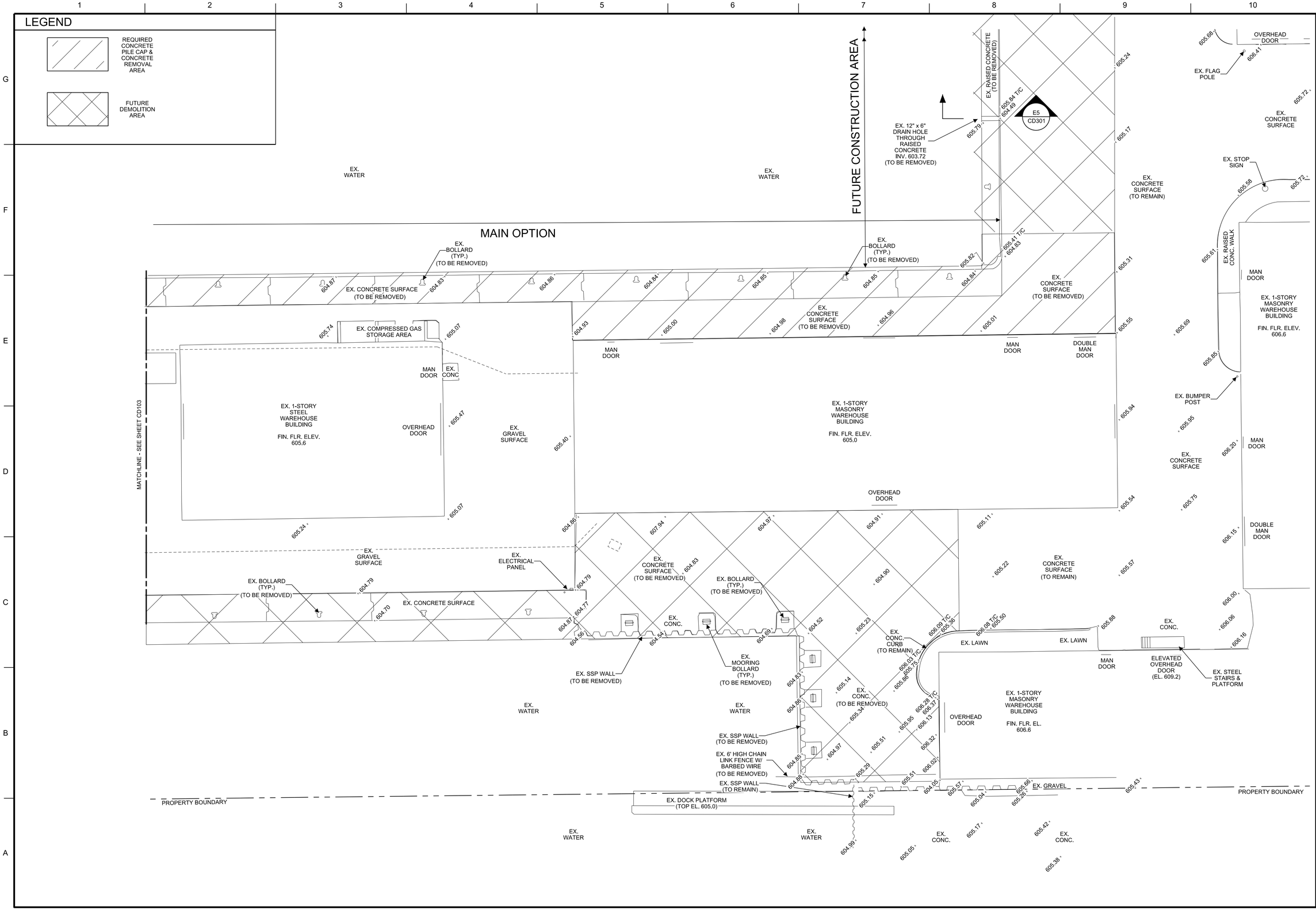

US Army Corps of Engineers®

MARK	DESCRIPTION	DATE

DESIGNED BY: M. DESJARDINS	ISSUE DATE: 22 MAY 2020
DRAWN BY: B. KORZETZ	SOLICITATION NO.: W911XK##X00##
CHECKED BY:	CONTRACT NO.:
SUBMITTED BY:	PROJECT NUMBER: DS
SIZE: ANSI D	FILENAME: DLVSLYARD_CD102.dgn

U.S. ARMY CORPS OF ENGINEERS
DETROIT DISTRICT
477 MICHIGAN AVE
DETROIT, MI 48226

ST. LOUIS COUNTY
DULUTH, MN
FY19 DULUTH
VESSEL YARD REPAIRS

SITE DEMOLITION PLAN
SOUTH PIER - EASTERLY END

SHEET ID
CD102

...\Active Projects\OM-Duluth, MM (476605)-FY19 Vessel Yard Repairs\3 - CADD\CAD_BIM_Sheets\
1:54:38 PM 5/21/2020 PD: LRE_pdf.pltcfg DS: LRE_Screen.dscript.dscript

65% BCOES REVIEW

LEGEND

- REQUIRED CONCRETE PILE CAP REMOVAL AREA
- REQUIRED CONCRETE CAP REMOVAL OPTION 1 AREA
- REQUIRED CONCRETE CAP REMOVAL OPTION 2 AREA
- FUTURE DEMOLITION AREA

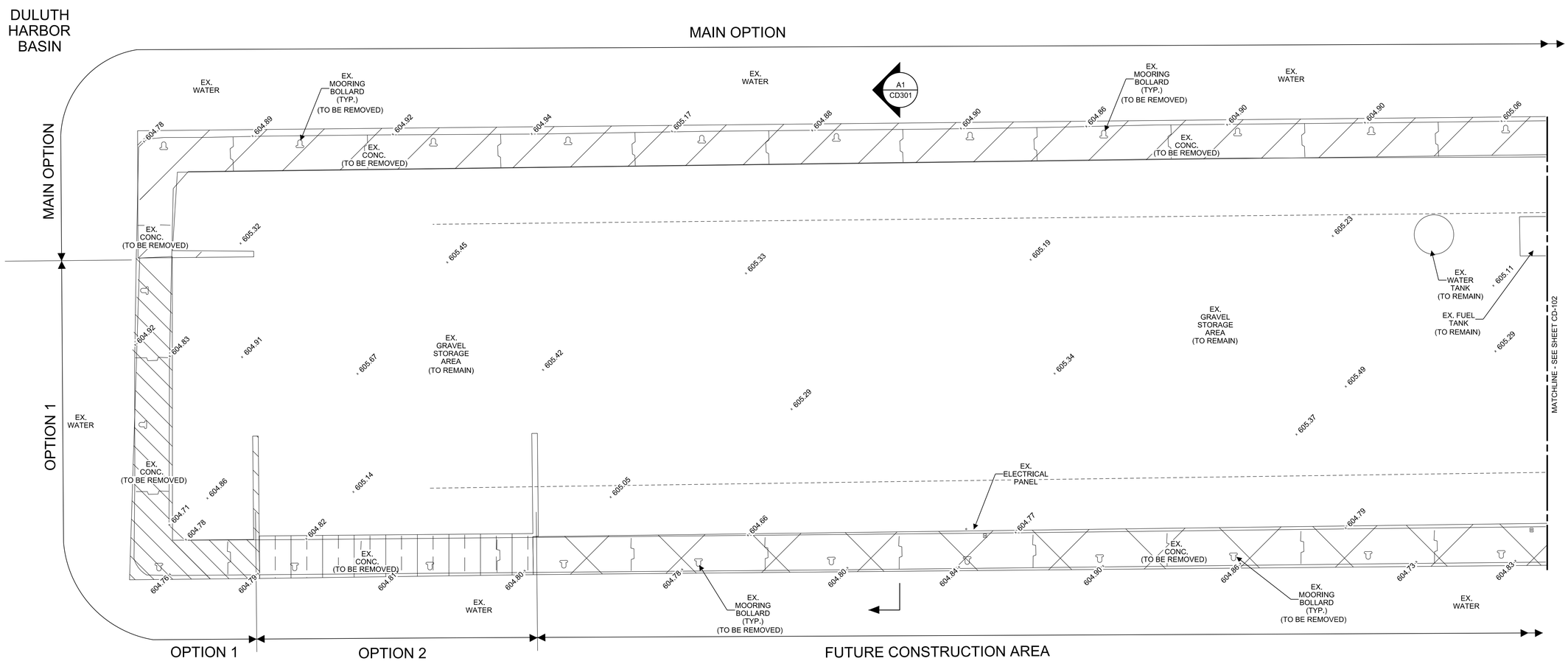

US Army Corps of Engineers®

MARK	DESCRIPTION	DATE

DESIGNED BY: M. DESJARDINS	ISSUE DATE: 22 MAY 2020
DRAWN BY: B. KORZETZ	SOLICITATION NO.: W911XK##X00##
CHECKED BY:	CONTRACT NO.:
SUBMITTED BY:	PROJECT NUMBER: DS
SIZE: ANSI D	FILENAME: DLVSLYARD_CD103.dgn

U.S. ARMY CORPS OF ENGINEERS
DETROIT DISTRICT
477 MICHIGAN AVE
DETROIT, MI 48226

VALUE ENGINEERING

INCREASE PRINT LIMIT: 400%

ST. LOUIS COUNTY
DULUTH, MN
FY19 DULUTH
VESSEL YARD REPAIRS

SITE DEMOLITION PLAN
SOUTH PIER - WESTERLY END

SHEET ID

CD103

...\Active Projects\OM-Duluth, MM (476605)-FY19 Vessel Yard Repairs\3 - CADD\CAD_BIM_Sheets\
1:58:00 PM 5/21/2020 PD: LRE_pdf.pltcfg DS: LRE_Screen.dscript.dscript

65% BCOES REVIEW

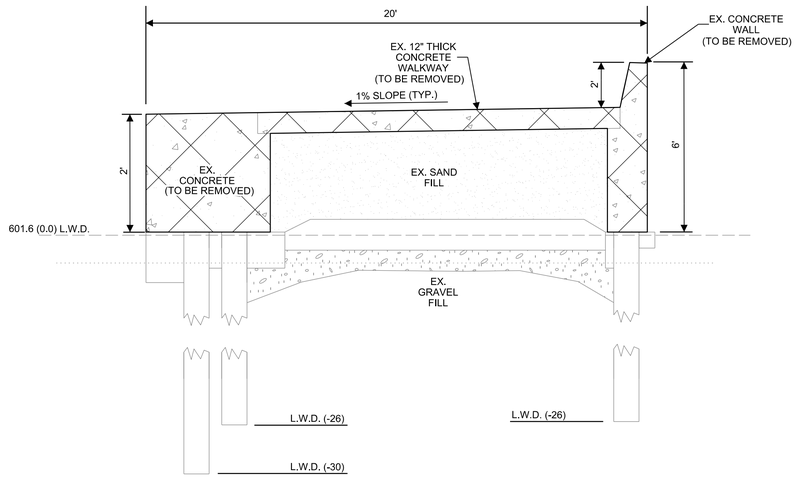

E1 FUTURE DEMOLITION NORTH PIER CROSS SECTION
SCALE: 1" = 3'

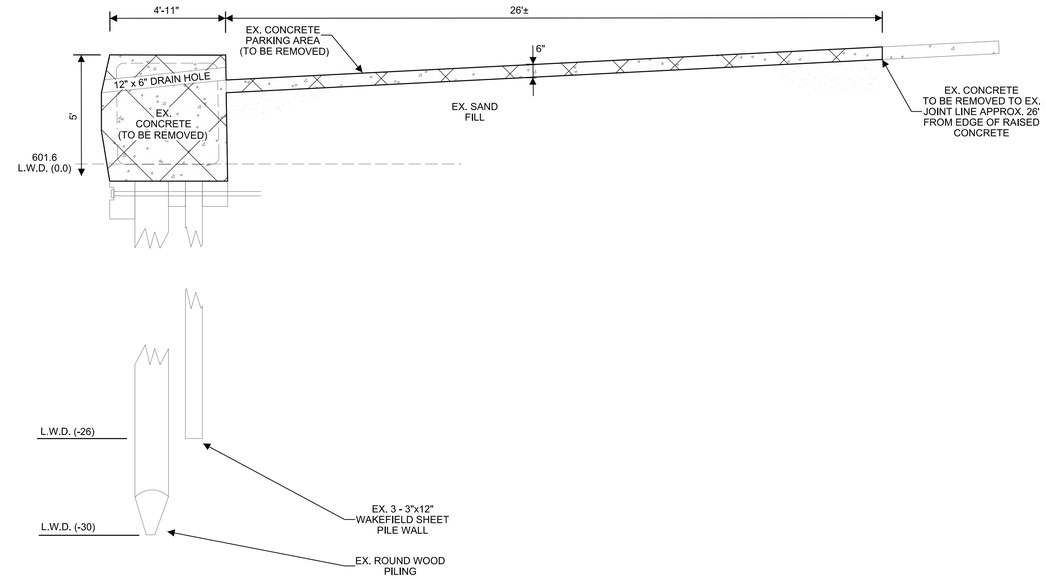

E5 FUTURE DEMOLITION PIERHEAD CROSS SECTION
SCALE: 1" = 3'

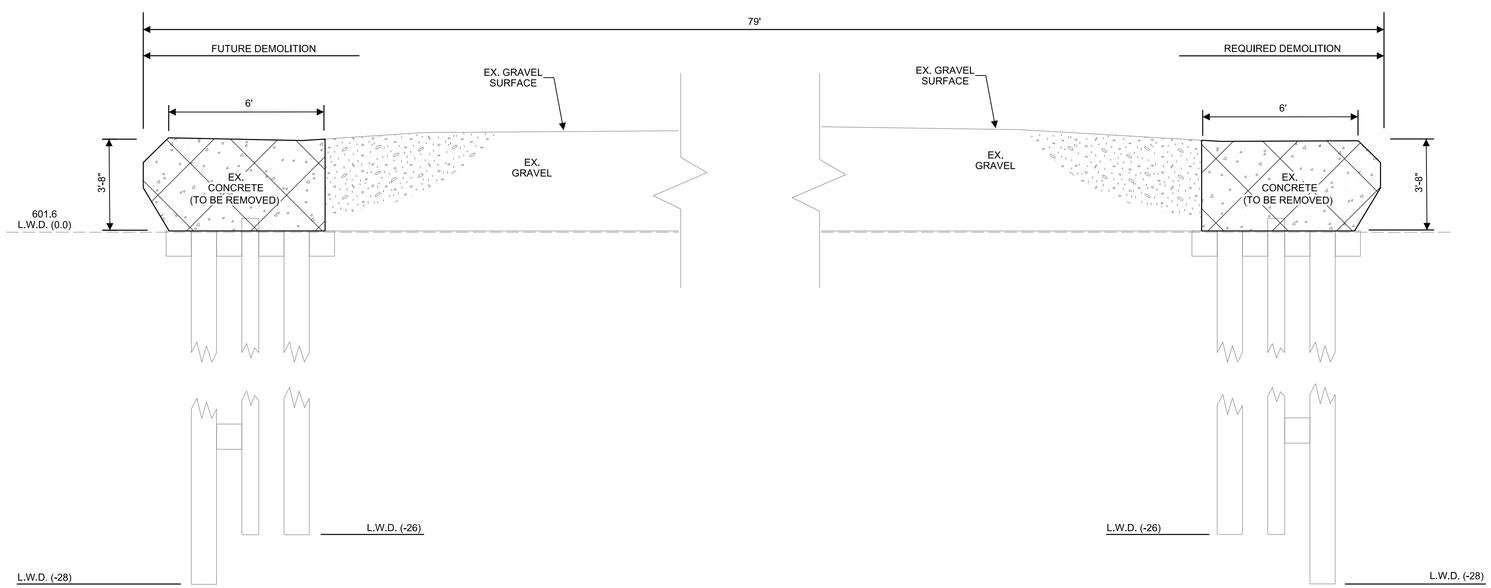

A1 REQUIRED AND FUTURE DEMOLITION CROSS SECTION - SOUTH PIER
SCALE: 1" = 3'

US Army Corps of Engineers®

MARK	DESCRIPTION	DATE

DESIGNED BY: M. DESJARDINS
DRAWN BY: B. KORZETZ
CHECKED BY:
SUBMITTED BY: ST
SIZE: ANSI D
ISSUE DATE: 22 MAY 2020
SOLICITATION NO.: W911XK##X00##
CONTRACT NO.:
PROJECT NUMBER: DS
FILENAME: DLVSLYARD_CD301.dgn

U.S. ARMY CORPS OF ENGINEERS
DETROIT DISTRICT
477 MICHIGAN AVE
DETROIT, MI 48226

VALUE ENGINEERING

ST. LOUIS COUNTY
DULUTH, MN
FY19 DULUTH
VESSEL YARD REPAIRS

SITE DEMOLITION CROSS SECTIONS

SHEET ID
CD301

65% BCOES REVIEW

DULUTH HARBOR BASIN

FUTURE CONSTRUCTION AREA

E1 C-301

PROPERTY BOUNDARY

REQUIRED FUTURE CONCRETE

REQUIRED FUTURE SSP WALL C/L SHALL BE 3'± FROM EDGE OF EX. CONCRETE WALL

EX. WATER

EX. 2-STORY MASONRY RESIDENTIAL BUILDING

EX. 6 FT. HIGH CHAIN LINK FENCE W/ BARBED WIRE

EX. CONC.

EX. 1-STORY MASONRY WAREHOUSE BUILDING

E5 C-301

EX. BUMPER POSTS

EX. ELECTRICAL GENERATOR

EX. BUMPER POST

EX. STEEL ANTENNA

EX. STOP SIGN

EX. CONC. WALK

LEGEND

- MAIN OPTION AREA
- OPTION 1 AREA
- OPTION 2 AREA
- FUTURE CONSTRUCTION AREA

MAIN OPTION

A1 C-301

REQUIRED TEE HEAD BOLLARD 50 TON CAPACITY (TYP.)

REQUIRED SSP WALL C/L SHALL BE 3'± FROM EDGE OF EX. CONCRETE WALL

REQUIRED CONCRETE PIER CAP

REQUIRED CONCRETE

EX. 1-STORY METAL FRAME WAREHOUSE BUILDING

EX. GRAVEL STORAGE AREA

EX. DECORATIVE PROP

REQUIRED SSP WALL C/L SHALL BE 1'± FROM EDGE OF EX. CONCRETE WALL

REQUIRED SSP WALL C/L SHALL BE LANDWARD OF THE ORIGINAL LOCATION OF EX. SSP WALL

REQUIRED SSP WALL C/L SHALL MAINTAIN ORIGINAL LOCATION OF EX. SSP WALL

MAIN OPTION

OPTION 1

OPTION 2

PROPERTY BOUNDARY

N

0 20' 40'

A1 OVERALL REQUIRED & FUTURE PLAN

SCALE: 1= 20'

US Army Corps of Engineers®

MARK	DESCRIPTION	DATE

DESIGNED BY: M. DESJARDINS
DRAWN BY: B. KORZETZ
CHECKED BY:
SUBMITTED BY:
SIZE: ANSI D
FILENAME: DLVSLYARD_C-101.dgn
ISSUE DATE: 22 MAY 2020
SOLICITATION NO.: W911XK##X00###
CONTRACT NO.:
PROJECT NUMBER: DS

U.S. ARMY CORPS OF ENGINEERS
DETROIT DISTRICT
477 MICHIGAN AVE
DETROIT, MI 48226

VALUE ENGINEERING

ST. LOUIS COUNTY
DULUTH, MN
FY19 DULUTH
VESSEL YARD REPAIRS

OVERALL REQUIRED PLAN

SHEET ID

C-101

...\Active Projects\OM-Duluth, MM (476605)-FY19 Vessel Yard Repairs\3 - CADD\CAD_BIM_Sheets\
11:28:50 AM 5/21/2020 PD: LRE_pdf.pltcfg DS: LRE_Screen.dscript.dscript

65% BCOES REVIEW

LEGEND

FUTURE WORK AREA

EX. WATER
EX. WATER
FUTURE SSP - C/L SSP TO BE MIN. 3' OFF OF EX. CONCRETE
FUTURE TEE HEAD BOLLARD (TYP.)
FUTURE CONSTRUCTION CONCRETE
FUTURE CONSTRUCTION CONCRETE
EX. CONCRETE SURFACE
EX. FLAG POLE
OVERHEAD DOOR
605.68
606.41
605.24
E5
C-301
605.17
605.72
EX. CONCRETE SURFACE
EX. CONCRETE SURFACE
EX. STOP SIGN
605.58
605.72
REQUIRED SSP - C/L SSP TO BE MIN. 3' OFF OF EX. CONCRETE
REQUIRED TEE HEAD BOLLARD 50 TON CAPACITY (TYP.)
REQUIRED SSP - C/L SSP TO BE MIN. 3' OFF OF EX. CONCRETE
REQUIRED TEE HEAD BOLLARD 50 TON CAPACITY (TYP.)
REQUIRED SSP - EXTENDING 25' BEYOND SSP INTERSECTION
24'-0" (TYP.)
604.87
24'-0" (TYP.)
25'-0"
REQUIRED CONSTRUCTION CONCRETE
REQUIRED CONSTRUCTION CONCRETE
REQUIRED CONSTRUCTION CONCRETE
REQUIRED 8" VERTICAL STEP IN CONCRETE
REQUIRED 8" VERTICAL STEP IN CONCRETE
5'
7'-0"
12'-0"
604.93
605.31
23'-1"
605.55
605.61
EX. RAISED CONC. WALK
MAN DOOR
EX. 1-STORY MASONRY WAREHOUSE BUILDING
FIN. FLR. ELEV. 606.6
605.74
EX. COMPRESSED GAS STORAGE AREA
605.07
MAN DOOR
124' - 6"
MAN DOOR
DOUBLE MAN DOOR
605.69
EX. CONCRETE SURFACE
605.85
MAN DOOR
EX. CONC
EX. 1-STORY STEEL WAREHOUSE BUILDING
FIN. FLR. ELEV. 605.6
OVERHEAD DOOR
605.47
EX. GRAVEL SURFACE
605.40
EX. 1-STORY MASONRY WAREHOUSE BUILDING
FIN. FLR. ELEV. 605.0
605.94
605.95
EX. BUMPER POST
605.20
MAN DOOR
EX. CONCRETE SURFACE
MATCHLINE - SEE SHEET C-103
OVERHEAD DOOR
605.07
605.24
605.54
605.75
604.86
607.94
604.97
604.91
605.11
DOUBLE MAN DOOR
605.15
EX. GRAVEL SURFACE
EX. ELECTRICAL PANEL
FUTURE CONSTRUCTION CONCRETE
FUTURE CONSTRUCTION CONCRETE
605.22
EX. CONCRETE SURFACE
605.57
604.79
604.79
604.99
606.00
606.06
606.16
FUTURE CONSTRUCTION CONCRETE
EX. CONC. CURB
606.09 T/C
606.36
606.09 T/C
605.50
605.88
EX. CONC.
EX. LAWN
EX. LAWN
FUTURE TEE HEAD BOLLARD (TYP.)
FUTURE SSP - C/L SSP TO BE MIN. 1' OFF OF EX. CONCRETE
FUTURE TEE HEAD BOLLARD (TYP.)
FUTURE TEE HEAD BOLLARD (TYP.)
FUTURE CONSTRUCTION CONCRETE
606.03 T/C
605.75
605.86
MAN DOOR
ELEVATED OVERHEAD DOOR (EL. 609.2)
EX. STEEL STAIRS & PLATFORM
EX. WATER
EX. WATER
606.28 T/C
606.37
606.13
606.32
606.02
OVERHEAD DOOR
EX. 1-STORY MASONRY WAREHOUSE BUILDING
FIN. FLR. ELEV. 606.6
FUTURE TEE HEAD BOLLARD (TYP.)
605.15
605.51
604.05
605.57
605.04
605.66
605.26
EX. GRAVEL
605.43
PROPERTY BOUNDARY
PROPERTY BOUNDARY
EX. DOCK PLATFORM (TOP EL. 605.0)
EX. SSP WALL
EX. WATER
EX. WATER
604.99
605.05
EX. CONC.
605.17
605.42
EX. CONC.
605.38

US Army Corps of Engineers®

MARK	DESCRIPTION	DATE

DESIGNED BY: M. DESJARDINS
DRAWN BY: B. KORZETZ
CHECKED BY:
SUBMITTED BY:
SIZE: ANSI D
ISSUE DATE: 22 MAY 2020
SOLICITATION NO.: W911XK##XX0##
CONTRACT NO.:
PROJECT NUMBER: DS
FILENAME: DLVSLYARD_C-102.dgn

U.S. ARMY CORPS OF ENGINEERS
DETROIT DISTRICT
477 MICHIGAN AVE
DETROIT, MI 48226

VALUE ENGINEERING
WORKS PART!... DON'T REP'S
FOR REVIEW ONLY

ST. LOUIS COUNTY
DULUTH, MN
FY19 DULUTH
VESSEL YARD REPAIRS

REQUIRED CIVIL PLAN
SOUTH PIER - EASTERLY END

SHEET ID
C-102

...\Active Projects\OM-Duluth, MM (476605)-FY19 Vessel Yard Repairs\3 - CADD\CAD_BIM_Sheets\
11:18:59 AM 5/21/2020 PD: LRE_pdf.pltcfg DS: LRE_Screen.dscript.dscript

65% BCOES REVIEW

LEGEND

- OPTION 1 WORK AREA
- OPTION 2 WORK AREA
- FUTURE WORK AREA

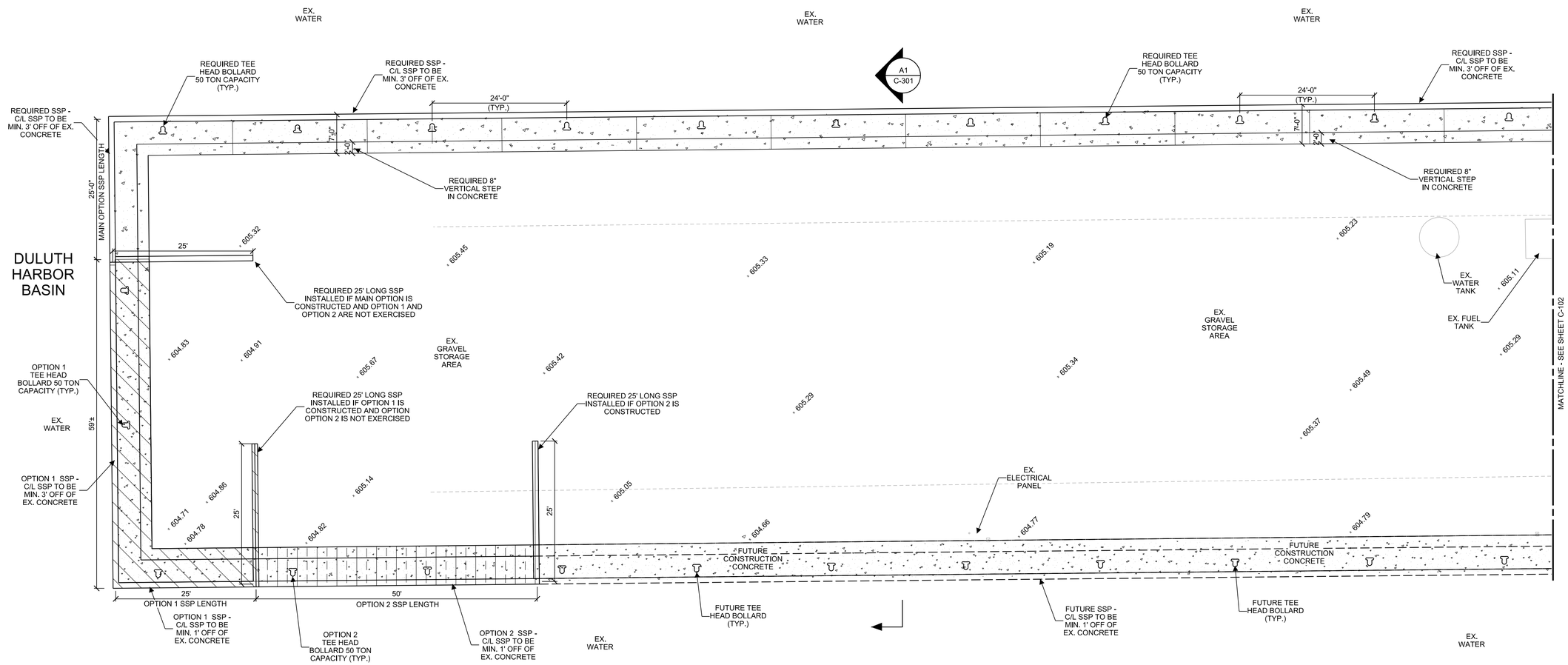

US Army Corps of Engineers®

MARK	DESCRIPTION	DATE

DESIGNED BY: M. DESJARDINS
DRAWN BY: B. KORZETZ
CHECKED BY:
SUBMITTED BY:
SIZE: ANSI D
ISSUE DATE: 22 MAY 2020
SOLICITATION NO.: W911XK##X00##
CONTRACT NO.:
PROJECT NUMBER: DS
FILENAME: DLVSLYARD_C-103.dgn

U.S. ARMY CORPS OF ENGINEERS
DETROIT DISTRICT
477 MICHIGAN AVE
DETROIT, MI 48226

VALUE ENGINEERING

ST. LOUIS COUNTY
DULUTH, MN
FY19 DULUTH
VESSEL YARD REPAIRS

REQUIRED CIVIL PLAN
SOUTH PIER - WESTERLY END

SHEET ID
C-103

...\Active Projects\OM-Duluth, MM (476605)-FY19 Vessel Yard Repairs\3 - CADD\CAD_BIM_Sheets\
11:20:12 AM 5/21/2020 PD: LRE_pdf.pltcfg DS: LRE_Screen.dscript.dscript

65% BCOES REVIEW

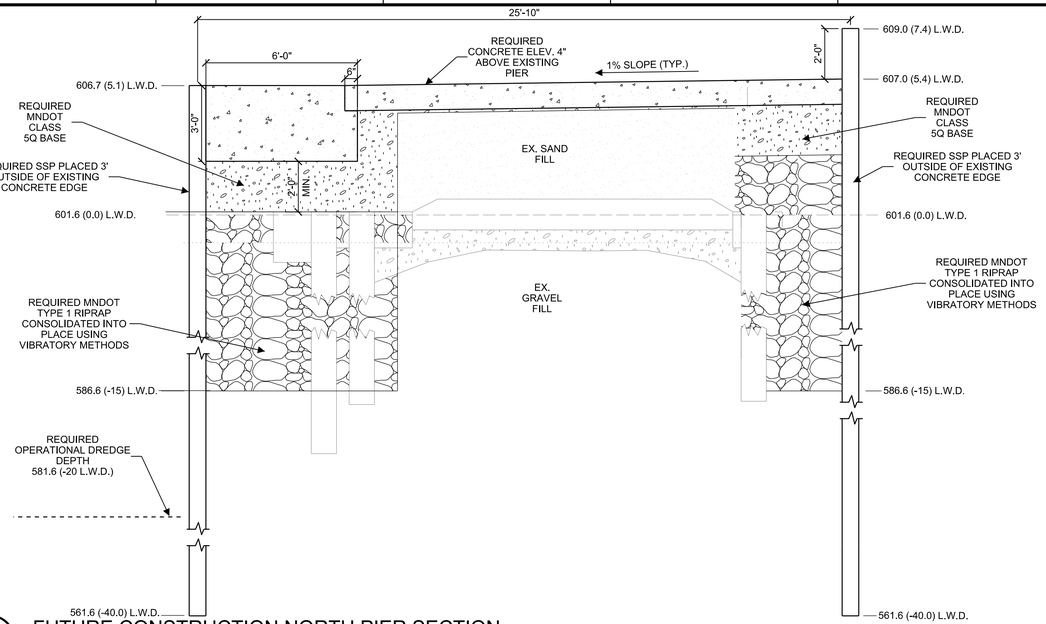

E1 FUTURE CONSTRUCTION NORTH PIER SECTION

SCALE: 1" = 3'

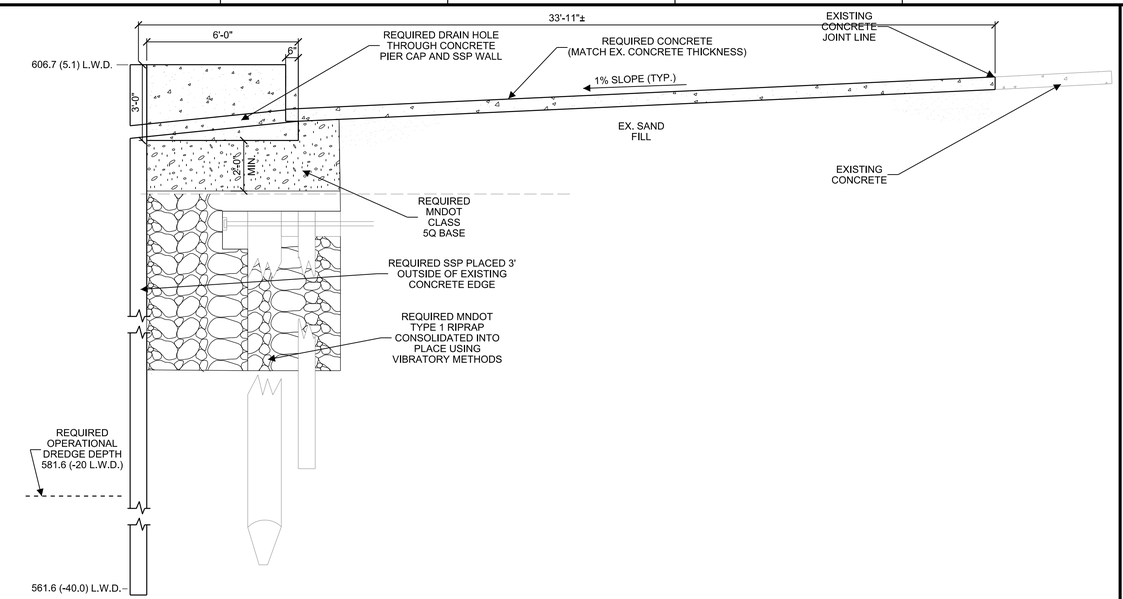

E6 FUTURE CONSTRUCTION PIERHEAD SECTION

SCALE: 1" = 3'

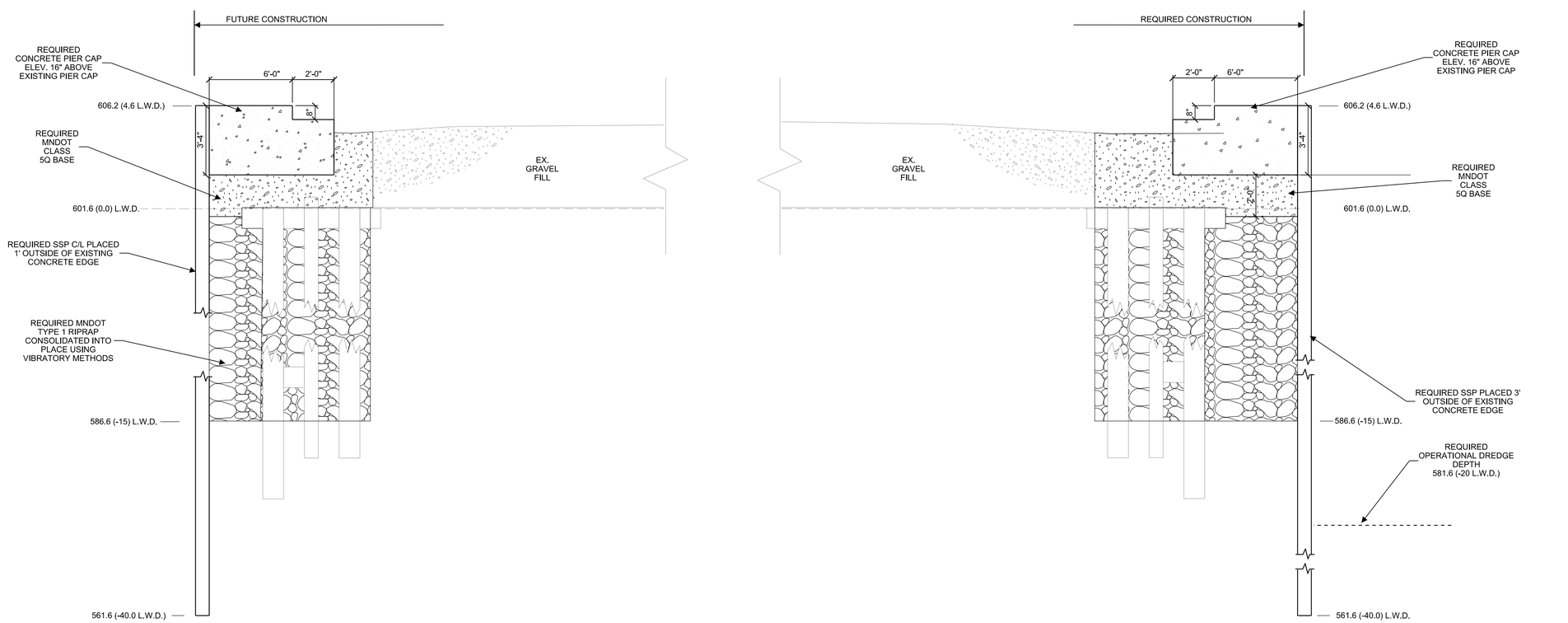

A1 REQUIRED & FUTURE SOUTH PIER SECTION

SCALE: 1" = 3'

US Army Corps of Engineers®

MARK	DESCRIPTION	DATE

ISSUE DATE: 22 MAY 2020
SOLICITATION NO.: W911XK##X00###
CONTRACT NO.:
PROJECT NUMBER: DS

DESIGNED BY: M. DESJARDINS
DRAWN BY: B. KORZETZ
CHECKED BY:
SUBMITTED BY:
SIZE: ANSI D
FILENAME: DLVSL YARD C-301.dgn

U.S. ARMY CORPS OF ENGINEERS
DETROIT DISTRICT
477 MICHIGAN AVE
DETROIT, MI 48226

VALUE ENGINEERING

ST. LOUIS COUNTY
DULUTH, MN
FY19 DULUTH
VESSEL YARD REPAIRS

REQUIRED CIVIL SECTIONS

SHEET ID

C-301

...\Active Projects\OM-Duluth, MM (476605)-FY19 Vessel Yard Repairs\3 - CADD\CAD_BIM_Sheets\
11:35:09 AM 5/21/2020 PD: LRE_pdf.pltcfg DS: LRE_Screen.dscript.dscript

65% BCOES REVIEW

Tee Head Bollard

The Tee Head Bollard is the world's favorite design choice. It accommodates mooring lines from all vessel sizes and types, at higher angles than Single or Double Bitt models. Its uses the minimum of valuable space along the quay.

- Up to 300t capacity on request
- Compact footprint
- Choice of materials to suit climate and application
- Accepts very steep line angles
- Perfect for multi-use facilities

Dimensions

Bollard capacity (metric tonnes)	A (mm)	B (mm)	C (mm)	D (mm)	E (mm)	F (mm)	G (mm)	H (mm)	I (mm)	J (mm)	K (mm)	L (mm)	M (mm)	Bolt Size	Bolt Qty.
10	240	304	380	330	50	–	–	230	107	–	–	280	140	M24	4
15	270	333	416	339	55	–	–	255	90	–	–	306	131	M24	4
20	282	349	436	359	55	–	229	304	0	137	–	325	141	M24	5
30	294	364	455	379	60	–	235	319	0	145	–	335	152	M30	5
50	390	456	570	482	70	–	305	412	0	186	–	430	197	M36	5
75	445	520	650	550	75	–	290	442	125	242	–	500	225	M42	6
100	492	616	770	630	85	297	475	545	0	193	295	600	245	M42	7
125	511	669	836	715	100	351	541	615	0	207	313	636	297	M48	7
150	530	718	898	748	110	358	559	658	0	219	334	678	299	M48	7
200	598	765	956	825	120	347	557	687	111	290	358	716	347	M56	8

Bollard capacity (metric tonnes)	A (in)	B (in)	C (in)	D (in)	E (in)	F (in)	G (in)	H (in)	I (in)	J (in)	K (in)	L (in)	M (in)	Bolt Size	Bolt Qty.
10	9½	12	15	13	2	–	–	9	4¼	–	–	11	5½	1	4
15	10¾	13¼	16¾	13¾	2¼	–	–	10	3½	–	–	12	5¼	1	4
20	11¼	13¾	17¼	14¼	2¼	–	9	12	0	5¼	–	12¾	5¾	1	5
30	11¾	14¾	17¾	14¾	2¾	–	9¼	12½	0	5¾	–	13¾	6	1¼	5
50	15¾	18	22½	19	2¾	–	12	16¾	0	7¾	–	16¾	7¾	1¼	5
75	17½	20½	25¾	21¾	3	–	11¾	17¾	4¾	9½	–	19¾	8¾	1¾	6
100	19¾	24¼	30¼	24¾	3¾	11¾	18¾	21½	0	7¾	11¾	23¾	9¾	1¾	7
125	20¼	26¾	32¾	28¾	4	13¾	21¼	24¼	0	8¼	12¾	25	11¾	1¾	7
150	20¾	28¼	35¾	29½	4¾	14¼	22	25¾	0	8¾	13¾	26¾	11¾	1¾	7
200	23½	30¼	37¾	32½	4¾	13¾	21¾	27	4¾	11¾	14¼	28¼	13¾	2¼	8

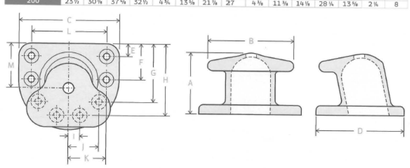

Version 001b / Copyright TekMarine Systems LLC, 2016

600 SERIES

RECTANGULAR CHAIN

Unique Duramax® rectangular solid bumper is extruded with a continuous chain throughout the length of the piece. Standard loaders on ends are 6 inches long, but longer lengths are available upon request.

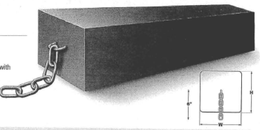

CODE NO.	DURAMAX® PART NO.	BASE WIDTH (W)	HEIGHT (H)	CHAIN SIZE	WT./FT.	PROOF COIL CHAIN LOAD LIMIT	ALLOY CHAIN LOAD LIMIT
DB-604	802060401	5"	5"	1/2"	14 LBS.	4250 LBS.	11250 LBS.
DB-605	802060501	6 1/2"	5"	1/2"	18 LBS.	4250 LBS.	11250 LBS.
DB-606	802060601	6 1/2"	6"	1/2"	22 LBS.	4250 LBS.	11250 LBS.
DB-608	802060801	8"	8"	1/2"	36 LBS.	4250 LBS.	11250 LBS.
DB-609	802060901	10"	8"	5/8"	46 LBS.	6375 LBS.	16500 LBS.
DB-610	802061001	10"	10"	5/8"	85 LBS.	6375 LBS.	16500 LBS.
DB-612	802061201	12"	12"	5/8"	85 LBS.	6375 LBS.	16500 LBS.
DB-614	802061401	14"	14"	5/8"	110 LBS.	6375 LBS.	16500 LBS.

*Max. length for white and grey are 20 FT.

option 1

700 SERIES

CYLINDRICAL CHAIN

Unique Duramax® cylindrical solid bumper is extruded with a continuous chain throughout the length of the piece. Standard loaders on ends are 6 inches long, but longer lengths are available upon request.

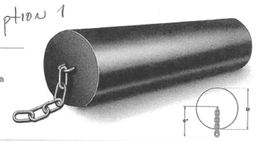

CODE NO.	DURAMAX® PART NO.	OUTSIDE DIAM. (D)	CHAIN SIZE	APPROX. WT./FT.	PROOF COIL CHAIN LOAD LIMIT	ALLOY CHAIN LOAD LIMIT
DB-705	802070501	5"	1/2"	12 LBS.	4250 LBS.	11250 LBS.
DB-706	802070601	6"	1/2"	16 LBS.	4250 LBS.	11250 LBS.
DB-707	802070701	7"	1/2"	23 LBS.	4250 LBS.	11250 LBS.
DB-708	802070801	8"	5/8"	30 LBS.	6375 LBS.	16500 LBS.
DB-709	802070901	9"	5/8"	37 LBS.	6375 LBS.	16500 LBS.
DB-710	802071001	10"	3/4"	47 LBS.	9125 LBS.	23000 LBS.
DB-711	802071101	11"	3/4"	55 LBS.	9125 LBS.	23000 LBS.
DB-712	802071201	12"	1"	68 LBS.	12400 LBS.	36750 LBS.

*Max. length for white and grey are 20 FT.

Est. 10' Long

Bishop Lifting Products, Inc. www.Lifting.com

Liftmax® Lifting Devices — Pad Eyes

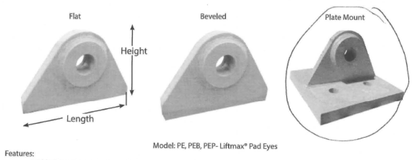

Model: PE, PEB, PEP- Liftmax® Pad Eyes

Features:

- Welded into place where needed
- Flat, beveled, and plate base models available
- Sizes designed to fit Crosby shackle dimensions
- Cold galvanized finish
- Design & Fabricated to ASME BTH-1 design standard
- Proof Tested to 125%

Capacity (tons)	Model: Flat	Model: Beveled	Model: Plate Mount	Fits Shackle Size G-209/G-2130	Weight approx. (Lbs.)
1	PE-00100	PEB-00100	PEP-00100	3/8"	1.25
1.5	PE-00150	PEB-00150	PEP-00150	7/16"	1.3
2	PE-00200	PEB-00200	PEP-00200	1/2"	1.75
3.25	PE-00325	PEB-00325	PEP-00325	5/8"	3
4.75	PE-00475	PEB-00475	PEP-00475	3/4"	4
6.5	PE-00650	PEB-00650	PEP-00650	7/8"	6
8.5	PE-00850	PEB-00850	PEP-00850	1"	8
9.5	PE-00950	PEB-00950	PEP-00950	1-1/8"	9
12	PE-01200	PEB-01200	PEP-01200	1-1/4"	9.5
13.5	PE-01350	PEB-01350	PEP-01350	1-3/8"	13.5
17	PE-01700	PEB-01700	PEP-01700	1-1/2"	17
25	PE-02500	PEB-02500	PEP-02500	1-3/4"	17.5
35	PE-03500	PEB-03500	PEP-03500	2"	20
55	PE-05500	PEB-05500	PEP-05500	2-1/2"	25

* Cheek plates (spacers) not included on all models.

GENERAL NOTES

1. NOTE 1
2. NOTE 2
3. NOTE 3

US Army Corps of Engineers®

MARK	DESCRIPTION	DATE

DESIGNED BY: M. DESJARDINS
DRAWN BY: B. KORZETZ
CHECKED BY:
SUBMITTED BY:
SIZE: ANSI D
ISSUE DATE: 22 MAY 2020
SOLICITATION NO.: W911XK##XX0##
CONTRACT NO.:
PROJECT NUMBER: DS
FILENAME: DLVSLYARD_C-501.dgn

U.S. ARMY CORPS OF ENGINEERS
DETROIT DISTRICT
477 MICHIGAN AVE
DETROIT, MI 48226

VALUE ENGINEERING

ST. LOUIS COUNTY
DULUTH, MN
FY19 DULUTH
VESSEL YARD REPAIRS

REQUIRED CIVIL DETAILS

SHEET ID

C-501

65% BCOES REVIEW

Appendix C: Lighting Design Report

PREPARED BY: LIONEL FOX

U.S. ARMY CORPS OF ENGINEERS

NASHVILLE DISTRICT

LIGHTING DESIGN REPORT

USEACE DULUTH AREA OFFICE

DULUTH VESSEL YARD PIER REPAIRS

USACE VESSEL YARD

City of Duluth, Minnesota in Saint Louis County

Executive Summary

The USACE Vessel Yard located in the harbor of Duluth, MN, will be undergoing a rehabilitation of its concrete and earthen filled piers. The piers are original to the facility, dating to the early part of the twentieth century. Shore power stations and area lighting has been added to the piers over the years and these electrical items will be replaced as part of the rehabilitation.

The lighting study will utilize a modern, computer-based simulation of new and existing lighting fixtures, coupled with a 3D map of the completed design of the facility to determine the lighting levels and select the final fixtures.

Table of Contents

1. Project Description 1-4
   1.1. Purpose and Scope of Report. 1-4
   1.2. Design Philosophy 1-4
   1.3. Assumptions and Design Challenges 1-4
   1.4. Assumptions 1-4
   1.5. Design Challenges 1-5
2. Design Requirements and Standards 2-5
   2.1. DoD/USACE Requirements 2-5
   2.2. City of Duluth, MN, Zoning Regulations: 2-6
3. Design Parameters 3-6
4. Existing Lighting Conditions 4-7
   4.1. Existing Lighting 4-7
   4.2. Simulation Results 4-8
5. Proposed Lighting Conditions 5-8
   5.1. North Pier 5-8
   5.2. South Pier 5-8
   5.3. Fixture Schedule 5-0
6. Simulation Results 6-0
7. Simulation Outputs 7-0

Figures

FIGURE 1: CITY OF DULUTH REQUIREMNTS FOR MINIMUM AND MAXIMUM ILLUMINATION 2-6
FIGURE 2: LIGHTING FIXTURE SCHEDULE 5-0
FIGURE 3: EXISTING LIGHTING CONDITIONS 6-0
FIGURE 4: FINAL LIGHTING CONDITIONS 6-1

1. Project Description

1.1. Purpose and Scope of Report.

1.1.1. Purpose

The purpose of this document is to capture the design process, and changes to, the site's exterior lighting. The goal is to achieve the minimum level of illuminance mandated by the Department of Defense Unified Field Criteria for U.S. Army shipping piers while minimizing the amount of illumination that reaches the top of the surrounding water or adjacent properties, in order to meet the zoning requirements for a waterfront, mixed use facility as set forth by the City of Duluth.

1.1.2. Scope

The lighting report covers the replacement of existing pole-mounted area lights on the North Pier, new pole-mounted pole lights on the South Pier, and spot lighting at select new shore power stations.

1.2. Design Philosophy

The goal is to achieve the Department of Defense (DoD) minimum required illumination levels for shipping piers while minimizing the amount of illumination that reaches the top of the surrounding water or adjacent properties. Fixtures that have the International Dark Skies Fixture Seal of Approval with minimal B.U.G (Backlighting, Uplighting, Glare) ratings have been selected.

1.3. Assumptions and Design Challenges

1.4. Assumptions

Exact model numbers/lumens of all existing lighting fixtures are unknown. The vessel yard received lighting upgrades as part of energy optimization project in FY17 but not all lights were replaced. Data sheets are available for the lights installed as part of that package but exact details of some fixtures are unknown. Therefore the simulation of the existing lighting is only an estimation, as the photometric data used in the model for unknown fixtures was selected based on an educated guesswork.

Additionally, for the fixtures from 2017, the manufacturer (Lithonia) no longer provides .ies files; files for the updated versions of the same fixtures have been substituted, but lumen values vary +/- 8% between the older and newer versions of some of the models.

1.5. Design Challenges

Overall, the minimum lighting level dictated by UFC 4-150-02 for U.S. Army shipping piers and the maximum level set of the City of Duluth zoning regulations leave only a five footcandle window to work within. This is a narrow margin for an area as large of the shipping piers. A large number of poles with lower lumen fixtures would meet both requirements but would require more poles than would be practical for the type of work conducted at the vessel yard. The preference was given to slightly under lighting some areas of the piers, particularly at the ends where vessels are not usually moored, than to over light the piers in an effort to reach the UFC minimum over every square foot of both piers.

The North Pier is a narrow structure; reaching the required level of illuminance without illuminating the water is challenging. Currently the pier has only four fixtures, which leaves sections of the pier between the poles below the required lighting levels. Maintaining only four fixtures proved not to be practical, as increasing the brightness of the fixtures to fully illuminate the stretches between the poles caused high levels of illumination at the water level. It was necessary to use a larger number of lower power lights, six versus four, to reach uniform illuminance without unduly increasing light at the water level.

The nature of the work done on the south pier prohibits any light poles from being placed in the center of the pier; all poles must be along the outside edge of the pier. Additionally, the barge *Howard J. Schwartz* regularly operates its crane while moored, which mandates a radius of 75' be kept clear of poles around its berth for the crane boom. This may mandate folding or collapsible lighting poles on the northern side of the South Pier.

2. Design Requirements and Standards

2.1. DoD/USACE Requirements

2.1.1. UFC 4-150-02:

UFC 4-150-02 *Dockside Utilities for Ship Service*, Section 7-5.2: Lighting states:

Satisfactory illumination should be ensured for night operations. For open watering areas on the pier where ship loading or unloading occurs, a lighting intensity of at least 5 footcandles (54 lux) should be maintained. The illumination level of 5 footcandles (54 lux) should also be provided for areas of warehouses or storage buildings.

Therefore, 5 footcandles was used as a target illuminance level for the top surface of the the North and South Piers.

2.2. City of Duluth, MN, Zoning Regulations:

2.2.1. Classification:

The Vessel yard is zoned as MU-W: Mixed Use-Waterfront.

2.2.2. 50-31.1: Exterior Lighting

Zoning regulation section 50-31.1 governs exterior lighting in the City of Duluth. The following restrictions are pertinent to the design of the Vessel yard's exterior lighting:

2.2.3. Minimum and Maximum Illumination Values

Table 50-31-1: Minimum and Maximum Illumination Values (in Footcandles)

Use	Maximum Illumination on Property	Maximum Illumination at Property Line (Excluding Rights-of-Way)	Maximum Illumination at Right-of-Way	Maximum/ Minimum Ratio in an Illuminated Area
Residential Uses and Agricultural and Animal Related Uses	5	.5	1.0	10:1
All Other Uses	10	1.0	2.0	15:1

Figure 1: City of Duluth Requiremnts for Minimum and Maximum Illumination

2.2.4. Pole Height

MU-W zones are restricted to a maximum light fixture pole height of 25 feet.

3. Design Parameters

3.1.1. Software

Visual Lighting by Acuity Brands, release 2.09.0105.

3.1.2. Light Loss Factor

A light loss factor of .81 was used, to account for the multiplicative effects of age of fixture over time (10%) and dirt/obstructions on the lens (10%).

3.1.3. Color Temperature

The existing lighting fixtures for which the model numbers are known are mostly 50,000 K. Site personnel have expressed desire that new lighting be in the 30,000k range for less of an impact on the surrounding areas.

3.1.4. Site Conditions

The expected finished site conditions were used in the lighting model, including the finished design elevations of the piers and parking area. The removal of the unused yard master's house was also reflected.

No attempt was made to model light sources from adjacent properties or from the moored ships. The ambient light level modeled was the worst case, 0 lumens, for a moonless overcast night. Lighting on the exterior of the yard facing the street was not modeled, as it is out of scope for this project and will not impact light levels on the piers or at the water's surface.

3.1.5. Elevations

A low water datum elevation of 601.6 was used as elevation 0 for the lighting model. Calculation zones for the water top lighting levels were taken at L.W.D. +2.4, which was the high water mark recorded in the last ten years at the on-site NOAA weather and tide station.

3.1.6. Simulation Parameters

Several sampling point grid sizes were used due to the size of the area being simulated. Calculations zones along the edge of the piers were given a tighter point density of 2' x 2' to accurately capture the working conditions at the pier edge while the open areas of the harbor were run on a 4' x 4' due to their large areas.

4. Existing Lighting Conditions

4.1. Existing Lighting

All existing fixtures are LED. On the north pier, there are currently four poles with large area lights that have a type IV distribution. The same fixtures are at the corners of the warehouse on the south pier. The majority of existing lighting on the south pier is provided by wall packs or wall mount area lights. There is an additional high intensity LED that illuminates the *Howard J. Schwartz* berth and shore power

station. Another set of pole mounted spot lights illuminate the area around the shore power station for the *Blue Heron* at the far end of the south side of the pier.

4.2. Simulation Results

The existing lighting of both piers is not uniform; there is a tendency for hot spots under poles and wall packs. Areas of one footcandle illuminance or great extended in excess of 30 feet from the edge of the North Pier. The type IV distribution pattern of the light fixtures also casts light off of the non-working side due to the amount of backlighting inherent in the distribution.

The majority of the South Pier beyond the Weld Shop is not lit, with the exception of the UMD shore power station. The area around the warehouse is brightly illuminated, with well over 10 footcandle due to their intensity and low mounting height relative to their power of the type IV area lights at the corners of the building. Areas of illuminance of over one footcandle extend over 30 feet from the edges of the South Pier.

5. Proposed Lighting Conditions

5.1. North Pier

The number of poles will be increased from four to six; each pole will still have one fixture at roughly 18k lumens. The fixtures modeled have a Backlighting Control distribution pattern to limit the amount of light that is cast off of the non-working side of the pier. Small wall pack fixture will be mounted at the two power stations to light the electrical equipment.

5.2. South Pier

The south pier will have eight new poles; the two at the far end of the pier will feature a single fixture, while the other six will have two, one each facing the interior of the pier and the other the outer edge of the pier. The fixtures at the end of the pier will use either a left or right corner cutoff distribution pattern to limit the amount of light cast off of the end of the pier. This extreme end of the pier is not lit to five footcandles but it is not an area that is normally used for mooring vessels. The remaining poles feature two different fixtures, both with backlight control distribution, but with the inner facing light at ~35k lumen to illuminate the broad expanse of the gravel filled portion of the pier, while the outer will be only ~18k lumens to light the edge without casting unnecessary light on the water's surface. Each power station that is located on the edge of the pier will have two low intensity spot lights on 10 foot poles to eliminate any shadowed areas along the edge of the pier caused by power station itself. The power stations located alongside the weld shop and warehouse will rely on the existing building lighting.

5.3. Fixture Schedule

Schedule							
Label	QTY	Manufacturer	Catalog Number	Description	Lumens per Lamp	LLF	Wattage
New S Pier Interior Pole Mount Area Light	6	Lithonia Lighting	DSX2 LED P3 30K BLC MVOLT	DSX2 LED P3 30K BLC MVOLT	21503	0.81	217
New S Pier Exterior Pole Mount Area Light	6	Lithonia Lighting	DSX1 LED P7 30K BLC MVOLT	DSX1 LED P7 30K BLC MVOLT	15779	0.81	183
New S Pier Pole Mount Right Cutoff Area Light	1	Lithonia Lighting	DSX2 LED P3 30K RCCO MVOLT	DSX2 LED P3 30K RCCO MVOLT	16000	0.81	217
New S Pier Pole Mount Light Left Cutoff Area Light	1	Lithonia Lighting	DSX2 LED P3 30K LCCO MVOLT	DSX2 LED P3 30K LCCO MVOLT	16000	0.81	217
New N Pier Pole Mount Area Light	6	Lithonia Lighting	DSX1 LED P7 30K BLC MVOLT	DSX1 LED P7 30K BLC MVOLT	15779	0.81	183
Power Station Spot Lights	10	Lithonia Lighting	DSXF1 LED P1 30K HMF	DSXF1 LED P1 30K HMF	Absolute	0.81	21
Power Station Wall Pack	2	Lithonia Lighting	LIL LED 30K MVOLT	LIL Wallpack (Standard)	833	0.81	8.36

Figure 2: Lighting Fixture Schedule

6. Simulation Results

See attached reports in next section for detailed views.

6.1.1. Overall View Existing Lighting

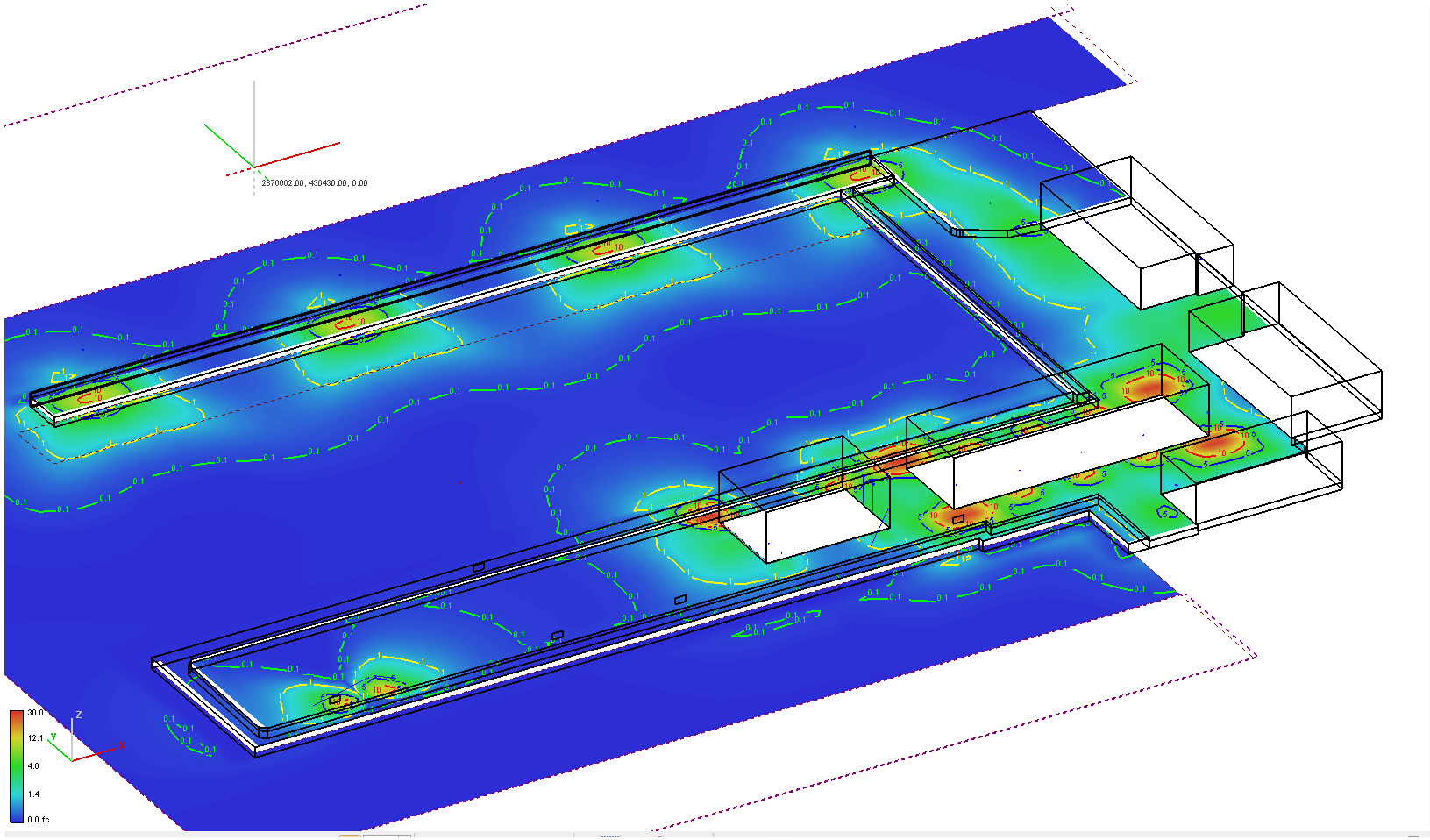

Figure 3: Existing Lighting Conditions

6.1.2. Overall View New Lighting

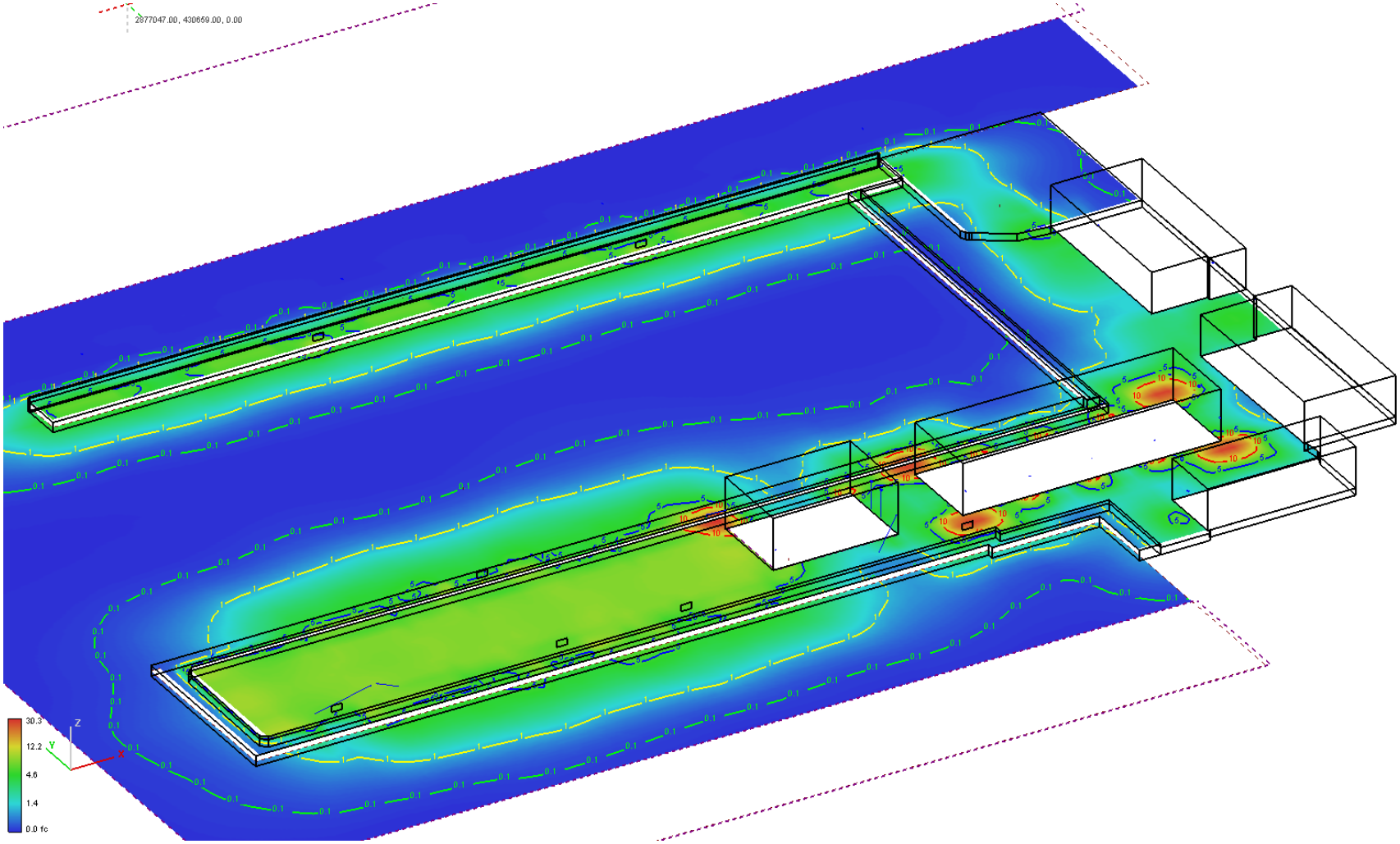

Figure 4: Final Lighting Conditions

6.1.3. North Pier

Along the surface of the pier, in the original configuration the maximum calculated illuminance was 11.1 fc, with an average of 3.1 fc and a max/min ratio of 1110:1. These values indicated the uneven lighting provided by only four fixtures over such a large area. The new six pole configuration provides an average value of 4.7 fc and the Max/Min ratio is reduced to 5.3:1. The illumination on the north edge of the pier falls below 1 fc before it reaches the properly line, as required by zoning regulations.

The light at the water's surface was evaluated in a rectangular area 30' wide running parallel to south edge of the pier. 30' was selected as the calculation zone boundary as is beyond the point that light levels fall below one footcandle along the full length of the pier. With the existing lighting, this area averages 1.3 fc with a maximum value of 6.1 fc. The new lighting does increase the average to 4.7 fc, as it lights the full length of the pier, but there is only a marginal increase in the maximum to 6.8 fc.

6.1.4. South Pier

As the majority of the working area past the welding shop was unlit in the existing configuration, the area averages less than a footcandle with the existing lighting, but has a hot spot of 37 fc due to the strong spot light at the *HSJ* berth. The new lighting layout averages 7.4 fc over the area past the weld shop, while dropping the Max/Min ratio under the 10:1 limit required by the city zoning regulations. The majority of the top of the pile wall structure reaches the 5 fc mark, with the exception of the far end of the pier, past where ships are moored.

The water's surface on each side of the pier was evaluated out to a distance of 50' from the pier; both sides of the pier average 1.7 fc over this area along its length. The maximum level is 8.2 fc on the north side, cause by the *HSJ* spot light, while the south side sees 5.9 fc.

7. Simulation Outputs

See attached reports:

Existing Lighting	New Lighting
Duluth Vessel Yard Exterior Lighting - E:	Duluth Vessel Yard Exterior Lighting - N

Appendix D: Lighting & Electrical Plan Drawings

DULUTH HARBOR BASIN

GENERAL NOTES

1. UNDERGROUND CONDUIT LOCATIONS ARE APPROXIMATE; CONTRACTOR TO LOCATE.
2. EXACT CONFIGURATION OF 480 VAC SERVICE LEAVING WAREHOUSE BUILDING UNKNOWN; CONTRACTOR TO DETERMINE AND UPDATE ELECTRICAL PLAN AND ONE-LINE DRAWINGS.
3. ALL EXISTING CABLE AND CONDUIT TO SHORE POWER STATIONS TO BE DEMOLISHED. 480 VAC JUNCTION BOXES AT WHAREHOUSE AND 240 VAC TRANSFORMERS IN THE WELD SHOP MARK THE LIMITS OF DEMOLITION WITH THE EXCEPTION OF ANY SEPARATELY METERED FEEDS FOR UMD OR EPA BERTHS.

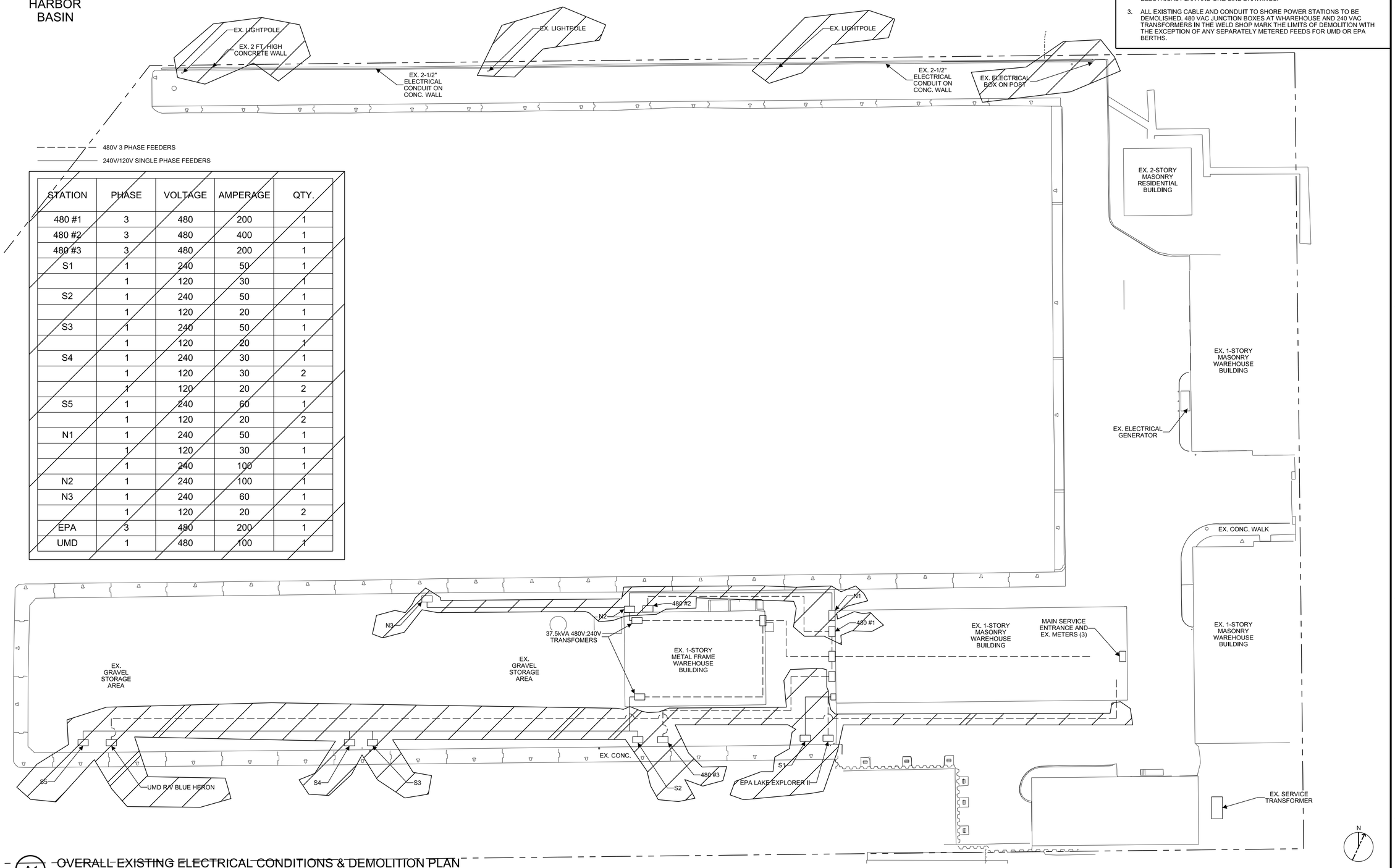

STATION	PHASE	VOLTAGE	AMPERAGE	QTY.
480 #1	3	480	200	1
480 #2	3	480	400	1
480 #3	3	480	200	1
S1	1	240	50	1
	1	120	30	1
S2	1	240	50	1
	1	120	20	1
S3	1	240	50	1
	1	120	20	1
S4	1	240	30	1
	1	120	30	2
	1	120	20	2
S5	1	240	60	1
	1	120	20	2
N1	1	240	50	1
	1	120	30	1
	1	240	100	1
N2	1	240	100	1
N3	1	240	60	1
	1	120	20	2
EPA	3	480	200	1
UMD	1	480	100	1

A1 OVERALL EXISTING ELECTRICAL CONDITIONS & DEMOLITION PLAN

SCALE: 1= 20'

US Army Corps of Engineers®

MARK	DESCRIPTION	DATE

DESIGNED BY: L. FOX
DRAWN BY: D. LAMBERT
CHECKED BY:
SUBMITTED BY:
SIZE: ANSI D
ISSUE DATE: 22 MAY 2020
SOLICITATION NO.: W911XK##X00###
CONTRACT NO.:
PROJECT NUMBER: DS
FILENAME: DLUSLYARD_ED-101.dgn

U.S. ARMY CORPS OF ENGINEERS
DETROIT DISTRICT
477 MICHIGAN AVE
DETROIT, MI 48226

VALUE ENGINEERING
CHECK PRINT - JUNE 1, 1997

ST. LOUIS COUNTY
DULUTH, MN
FY19 DULUTH
VESSEL YARD REPAIRS

EXISTING ELECTRICAL & DEMOLITION PLAN

SHEET ID
ED-101

...\Active Projects\OM-Duluth, MM (476605)-FY19 Vessel Yard Repairs\3 - CADD\CAD_BIM_Sheets\
3:14:00 PM 5/21/2020 PD: LRE_pdf.pltcfg DS: LRE_Screen.dscript.dscript

65% BCOES REVIEW

GENERAL NOTES

1. LETTER DENOTES FIXTURE TYPE. ALL LUMINARIES TO BE PHOTOCELL CONTROLLED.
2. INSTALL 240V LIGHTING CONTROL PANEL(S) AS INDICATED. POWER FROM NEAEST SHORE POWER STATION. SPOT LIGHTS AT POWER STATION ARE TO POWERED DIRECTLY FROM THAT STATION RATHER THAN THE CENTRAL PANEL.
3. INSTALL 4 #XXX IN XX" CONDUIT FOR LIGHTING BRNACH CIRCUITS. MINIMUM 24" BURIAL DEPTH.

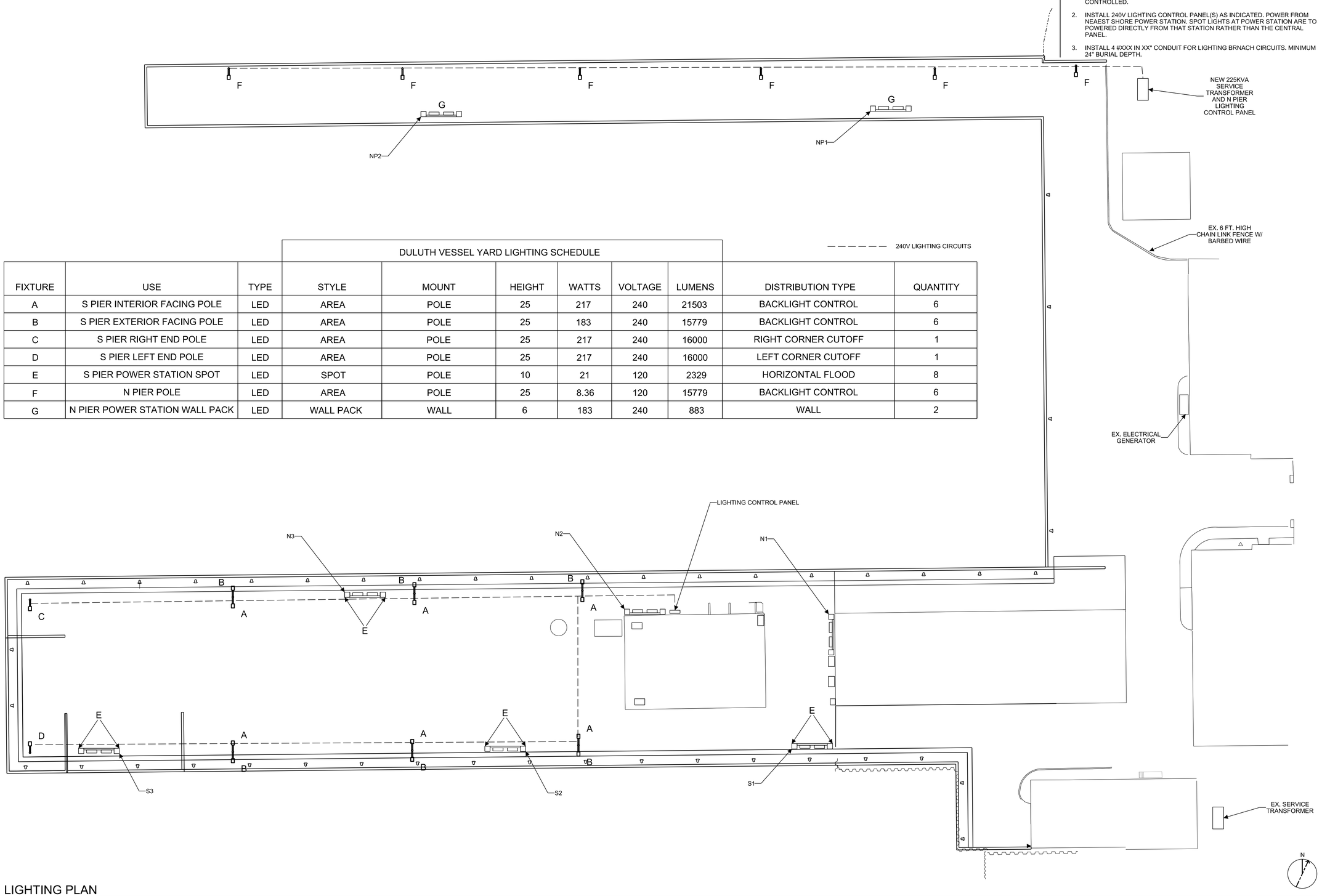

240V LIGHTING CIRCUITS

DULUTH VESSEL YARD LIGHTING SCHEDULE

FIXTURE	USE	TYPE	STYLE	MOUNT	HEIGHT	WATTS	VOLTAGE	LUMENS	DISTRIBUTION TYPE	QUANTITY
A	S PIER INTERIOR FACING POLE	LED	AREA	POLE	25	217	240	21503	BACKLIGHT CONTROL	6
B	S PIER EXTERIOR FACING POLE	LED	AREA	POLE	25	183	240	15779	BACKLIGHT CONTROL	6
C	S PIER RIGHT END POLE	LED	AREA	POLE	25	217	240	16000	RIGHT CORNER CUTOFF	1
D	S PIER LEFT END POLE	LED	AREA	POLE	25	217	240	16000	LEFT CORNER CUTOFF	1
E	S PIER POWER STATION SPOT	LED	SPOT	POLE	10	21	120	2329	HORIZONTAL FLOOD	8
F	N PIER POLE	LED	AREA	POLE	25	8.36	120	15779	BACKLIGHT CONTROL	6
G	N PIER POWER STATION WALL PACK	LED	WALL PACK	WALL	6	183	240	883	WALL	2

A1 LIGHTING PLAN

SCALE: 1= 20' (NOTE: POWER STATIONS AND FIXTURES NOT TO SCALE)

0 20' 40'

US Army Corps of Engineers®

MARK	DESCRIPTION	DATE

DESIGNED BY: L. FOX
DRAWN BY: D. LAMBERT
CHECKED BY:
SUBMITTED BY: SP
SIZE: ANSI D
ISSUE DATE: 22 MAY 2020
SOLICITATION NO.: W911XK##X00###
CONTRACT NO.:
PROJECT NUMBER: DS
FILENAME: DLVSLYARD_E-110.dgn

U.S. ARMY CORPS OF ENGINEERS
DETROIT DISTRICT
477 MICHIGAN AVE
DETROIT, MI 48226

VALUE ENGINEERING
WORKS PRIVATE...SUBMIT HERE

ST. LOUIS COUNTY
DULUTH, MN
FY19 DULUTH
VESSEL YARD REPAIRS

LIGHTING PLAN

SHEET ID
E-110

...\Active Projects\OM-Duluth, MM (476605)-FY19 Vessel Yard Repairs\3 - CADD\CAD_BIM_Sheets\
1:31:54 PM 5/21/2020 PD: LRE_pdf.pltcfg DS: LRE_Screen.dscript.dscript

65% BCOES REVIEW

GENERAL NOTES

1. SEE SHEET E-500 FOR SHORE POWER STATION DETAILS.
2. CAT6 TO BE RUN IN SEPARATE 3/4" CONDUIT FROM POWER CIRCUITS WITH MINIMUM 12" SEPARATION. MAKE A SINGLE NEW SERVICE ENTRANCE FOR ALL CAT6 CABLES ON THE WEST END OF THE WAREHOUSE. RUN DECIDATED NETWORK CONDUIT IN THE INTERIOR OF THE WAREHOUSE AND TERMINATE CABLES AT A 1U, 24 PORT PATCH PANEL IN A WALLMOUNTED 12U NETWORK CABINET NEAR THE MAIN ELECTRICAL SERVICE AREA. ARRANGE FINAL NETWORK CABINET LOCATION WITH GOVERNMENT COR.

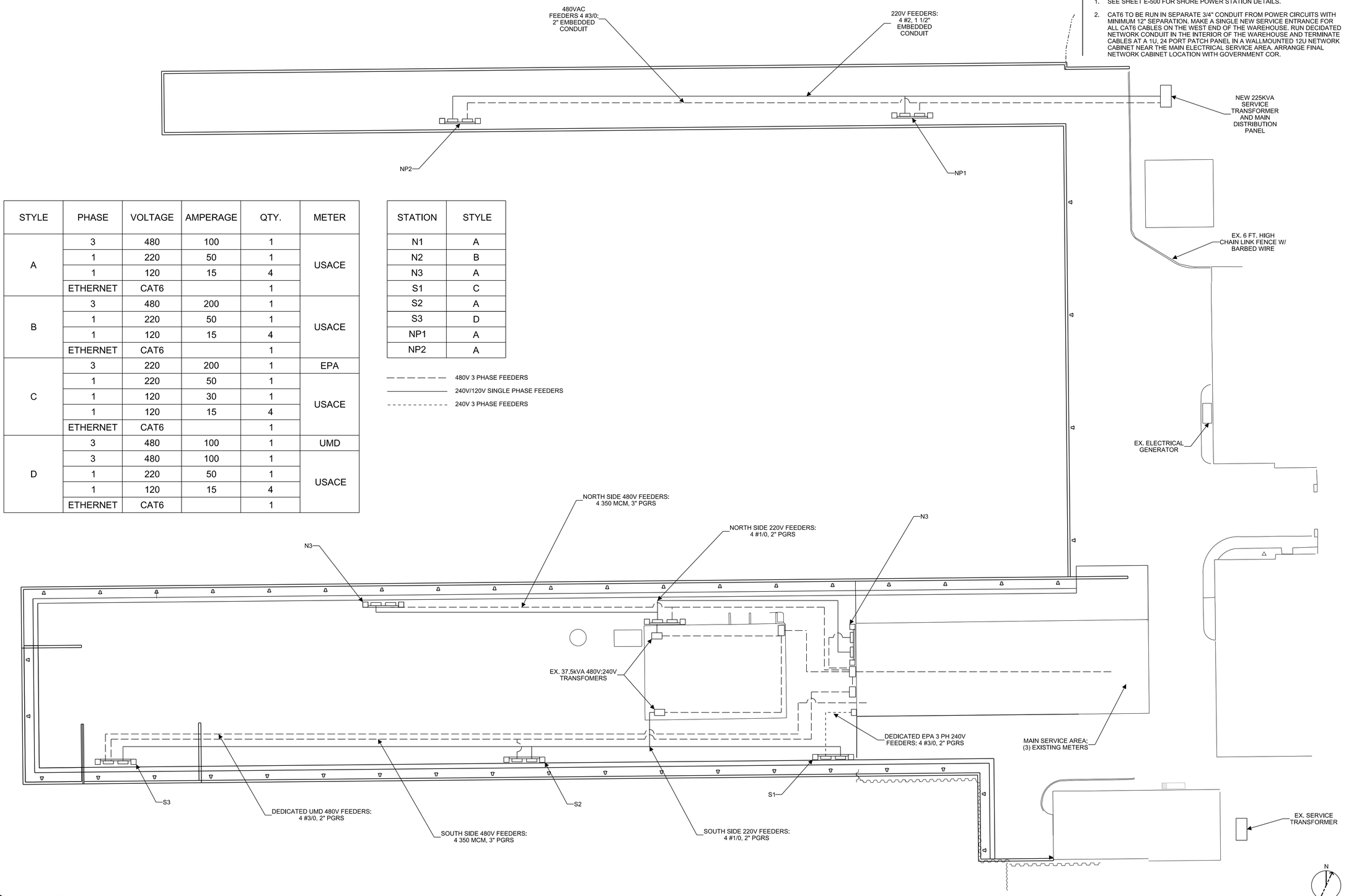

STYLE	PHASE	VOLTAGE	AMPERAGE	QTY.	METER
A	3	480	100	1	USACE
	1	220	50	1	
	1	120	15	4	
	ETHERNET	CAT6		1	
B	3	480	200	1	USACE
	1	220	50	1	
	1	120	15	4	
	ETHERNET	CAT6		1	
C	3	220	200	1	EPA
	1	220	50	1	USACE
	1	120	30	1	
	1	120	15	4	
	ETHERNET	CAT6		1	
D	3	480	100	1	UMD
	3	480	100	1	USACE
	1	220	50	1	
	1	120	15	4	
	ETHERNET	CAT6		1	

STATION	STYLE
N1	A
N2	B
N3	A
S1	C
S2	A
S3	D
NP1	A
NP2	A

480V 3 PHASE FEEDERS
240V/120V SINGLE PHASE FEEDERS
240V 3 PHASE FEEDERS

A1 ELECTRICAL PLAN

SCALE: 1= 20' (NOTE: SHORE POWER STATIONS NOT TO SCALE)

US Army Corps of Engineers®

MARK	DESCRIPTION	DATE

DESIGNED BY: L. FOX
DRAWN BY: D. LAMBERT
CHECKED BY:
SUBMITTED BY:
SIZE: ANSI D
FILENAME: DLUSLYARD_E-101.dgn
ISSUE DATE: 22 MAY 2020
SOLICITATION NO.: W911XK##X00###
CONTRACT NO.:
PROJECT NUMBER: DS

U.S. ARMY CORPS OF ENGINEERS
DETROIT DISTRICT
477 MICHIGAN AVE
DETROIT, MI 48226

VALUE ENGINEERING
VECKE PMP?...CMMT HDP S

ST. LOUIS COUNTY
DULUTH, MN
FY19 DULUTH
VESSEL YARD REPAIRS

ELECTRICAL PLAN

SHEET ID
E-101

...\Active Projects\OM-Duluth, MM (476605)-FY19 Vessel Yard Repairs\3 - CADD\CAD_BIM_Sheets\
1:39:12 PM 5/21/2020 PD: LRE_pdf.pltcfg DS: LRE_Screen.dscript.dscript

65% BCOES REVIEW

GENERAL NOTES

1. HATCHED REGIONS INDICATED ITEMS TO BE DEMOLISHED.

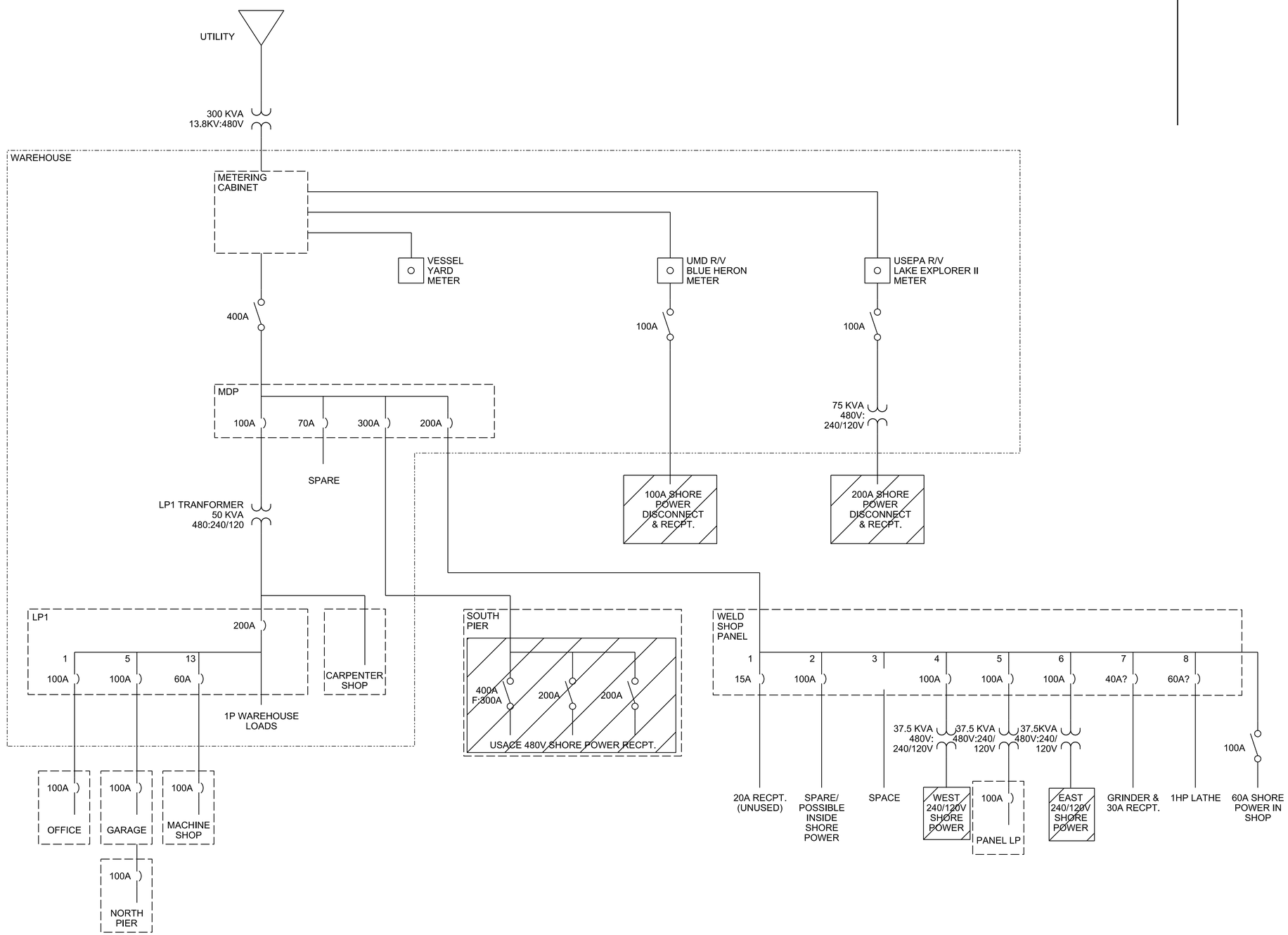

US Army Corps of Engineers®

MARK	DESCRIPTION	DATE

DESIGNED BY: L. FOX
DRAWN BY: D. LAMBERT
CHECKED BY:
SUBMITTED BY:
SIZE: ANSI D
FILE NAME: DLVSLVARD_ED-300.dgn
ISSUE DATE: 22 MAY 2020
SOLICITATION NO.: W911XK##X00##
CONTRACT NO.:
PROJECT NUMBER: DS

U.S. ARMY CORPS OF ENGINEERS
DETROIT DISTRICT
477 MICHIGAN AVE
DETROIT, MI 48226

ST. LOUIS COUNTY
DULUTH, MN
FY19 DULUTH
VESSEL YARD REPAIRS

ELECTRICAL ONE-LINE DEMOLITION PLAN

SHEET ID

ED-300

...\Active Projects\OM-Duluth, MM (476605)-FY19 Vessel Yard Repairs\3 - CADD\CAD_BIM_Sheets\
3:15:30 PM 5/21/2020 PD: LRE_pdf.pltcfg DS: LRE_Screen.dscript.dscript

65% BCOES REVIEW

GENERAL NOTES

1. CLOUDED REGIONS INDICATE NEW WORK.
2. SEE SHEET E-500 FOR SHORE POWER STATION THREE-LINE DIAGRAM AND DETAILS.

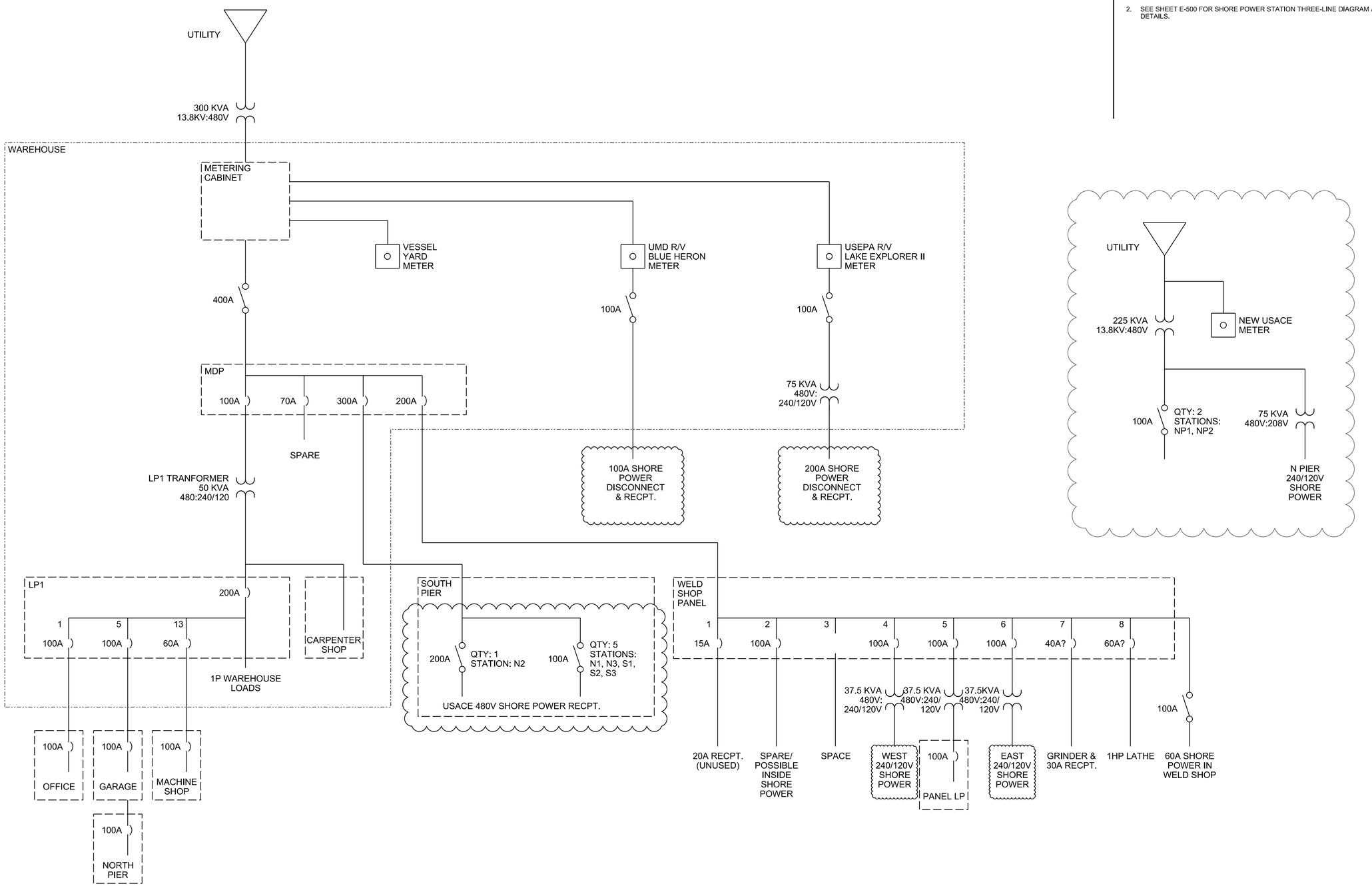

US Army Corps of Engineers®

MARK	DESCRIPTION	DATE

DESIGNED BY: L. FOX
DRAWN BY: D. LAMBERT
CHECKED BY:
SUBMITTED BY:
SIZE: ANSI D
FILE NAME: DLVSLYARD_E-300.dgn
ISSUE DATE: 22 MAY 2020
SOLICITATION NO.: W911XK##X00###
CONTRACT NO.:
PROJECT NUMBER: DS

U.S. ARMY CORPS OF ENGINEERS
477 MICHIGAN AVE
DETROIT, MI 48226

ST. LOUIS COUNTY
DULUTH, MN
FY19 DULUTH
VESSEL YARD REPAIRS

ELECTRICAL ONE-LINE

SHEET ID
E-300

...\Active Projects\OM-Duluth, MM (476605)-FY19 Vessel Yard Repairs\3 - CADD\CAD_BIM_Sheets\
3:03:22 PM 5/21/2020 PD: LRE_pdf.pltcfg DS: LRE_Screen.dscript.dscript

65% BCOES REVIEW

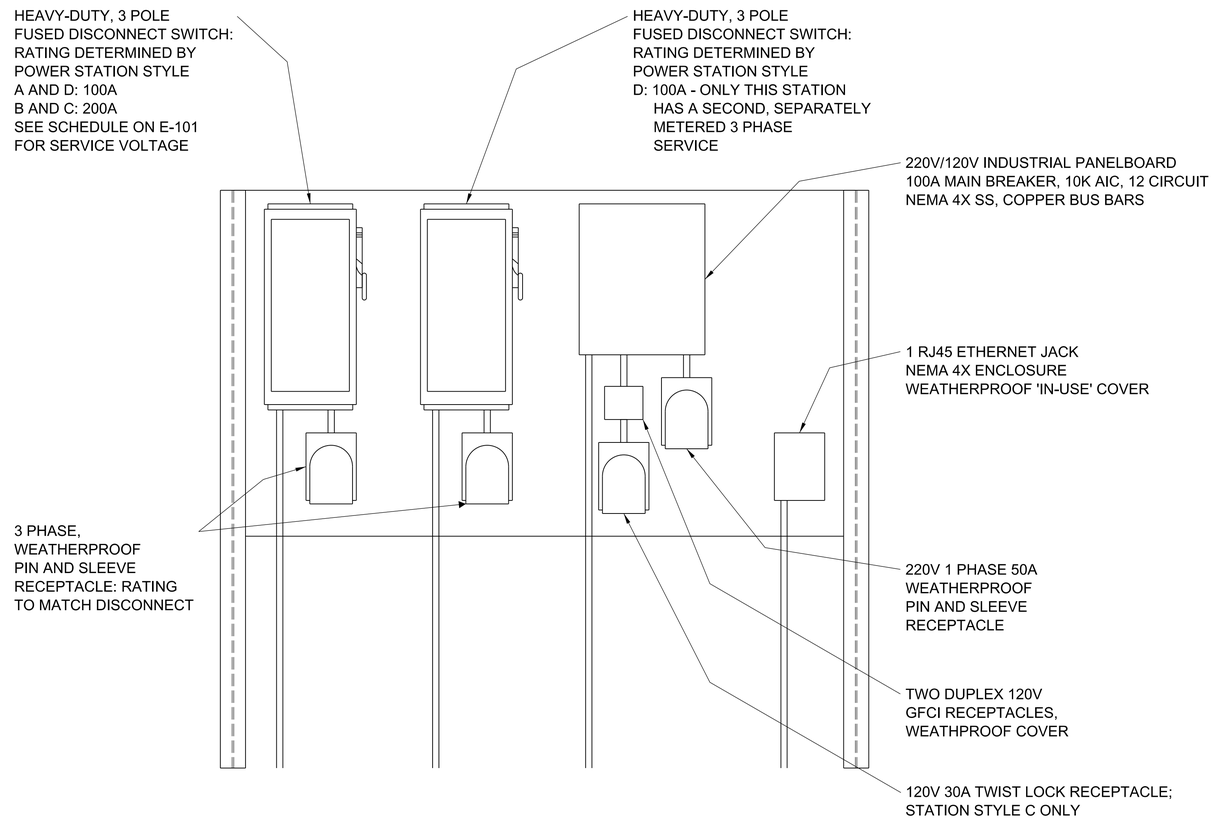

A1 SHORE POWER STATION DETAILS
SCALE: NOT TO SCALE

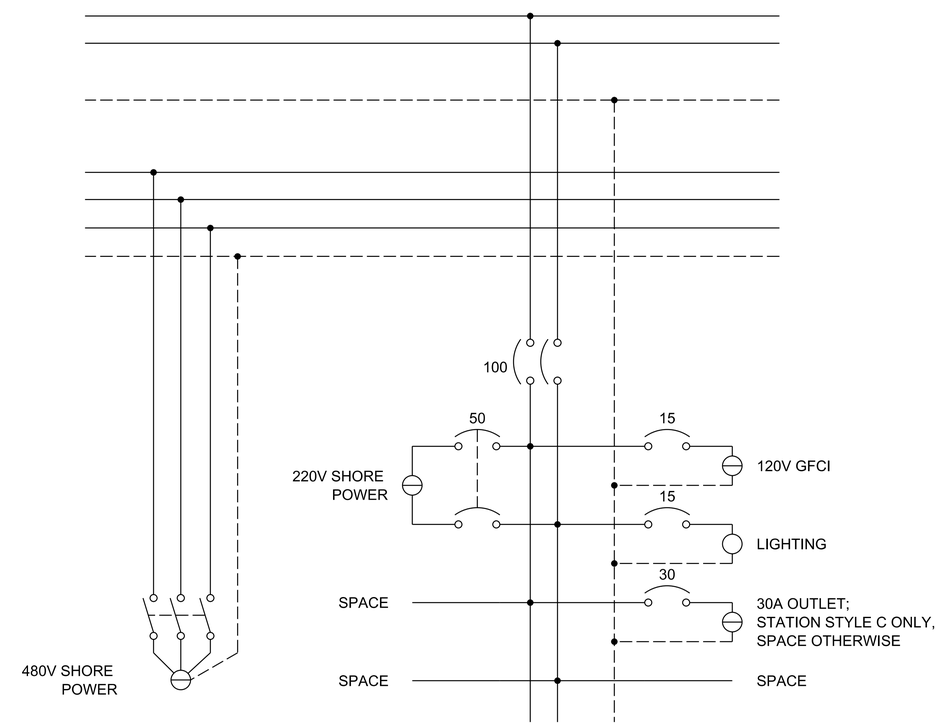

B1 SHORE POWER STATION SCHEMATIC
SCALE: NOT TO SCALE

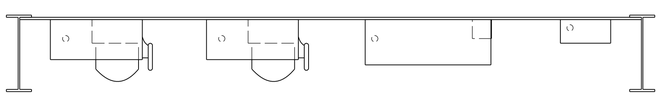

A2 SHORE POWER STATION DETAILS
SCALE: NOT TO SCALE

US Army Corps of Engineers®

MARK	DESCRIPTION	DATE

DESIGNED BY: L. FOX
DRAWN BY: D. LAMBERT
CHECKED BY:
SUBMITTED BY: SY
SIZE: ANSI D
ISSUE DATE: 22 MAY 2020
SOLICITATION NO.: W911XK##X00###
CONTRACT NO.:
PROJECT NUMBER: DS
FILE NAME: DLVSLYARD_E-500.dgn

U.S. ARMY CORPS OF ENGINEERS
DETROIT DISTRICT
477 MICHIGAN AVE
DETROIT, MI 48226

VALUE ENGINEERING

ST. LOUIS COUNTY
DULUTH, MN
FY19 DULUTH
VESSEL YARD REPAIRS

ELECTRICAL DETAILS

SHEET ID
E-500

65% BCOES REVIEW

Appendix E: USFWS IPaC Endangered Species Review Coordination

Appendix F: Section 404(b)(1) Evaluation

U.S. ARMY CORPS OF ENGINEERS BUILDING STRONG®

Duluth Vessel Yard
Duluth, Minnesota

Clean Water Act Section 404(b)(1) Evaluation of the Effects of Placing Fill Material into the Waters of the United States

6/1/2020

Appendix F

1. Project Description

1.1 Project Location, Description, and Authority

1.1.1 Project Location

The U.S. Army Corps of Engineers (USACE), Detroit District, Duluth Vessel Yard is an active vessel yard and staging area for USACE operations conducted out of the Duluth Area Office (DuAO). It is located at 901 Minnesota Avenue, Duluth, Minnesota approximately 0.2 miles south of the Duluth entry to Duluth-Superior Harbor. The Vessel Yard consists of two piers (North and South), a headwall structure, and several buildings including a residence formerly used by the Vessel Yard Master (Figure 1).

1.1.2 Project Description

In August, 2019 a USACE geostructural engineer conducted a survey of the Duluth Vessel Yard facilities and determined that the Vessel Yard piers do not meet the operational requirements of the USACE. The proposed action is to repair and improve the piers and headwall. New steel sheet pile (SSP) seawalls would be constructed to surround the existing piers, the space between the new and old SSP walls would be backfilled, and then a new concrete cap that extends to the limits of the new SSP seawall would be constructed. The proposed action would also include the installation of new light poles, light fixtures, power stations, and utility conduits.

1.1.3 Project Authority

The proposed repair and improvement of the Vessel Yard is authorized under general operations and maintenance authority for Duluth-Superior Harbor. The proposed action is necessary to avoid potential breakaway or collapse of the existing piers and maintain existing operational capacity of the Duluth Vessel Yard.

1.2 Proposed Fill Material

1.2.1 Characteristics of Material

The infill stone to be placed in the annulus between the new SSP and the existing structures will be Minnesota Department of Transportation (MnDOT) Class 1 riprap.

This will be capped by MnDOT 5Q aggregate to provide a working surface for the construction of concrete pavements, structural slabs, and foundations.

1.2.2 Quantity and Source of Material

1.2.2.1 North Pier

The North Pier is estimated to need the following fill material quantities:

a. Class 1 riprap: 2,000 cubic yards
b. Class 5Q aggregate: 550 cubic yards
c. Concrete: 570 cubic yards

Concrete will consist of pier capping concrete and 12” concrete placed on top of fill material to form the work surface of the North Pier.

1.2.2.2 East Headwall

The East Headwall is estimated to need the following fill material quantities:

a. Class 1 riprap: 700 cubic yards
b. Class 5Q aggregate: 150 cubic yards
c. Concrete: 270 cubic yards

Concrete will consist of pier capping concrete and concrete for a parking area placed on top of fill material (new and existing) and graded towards the ship basin.

1.2.2.3 South Pier

The South Pier is estimated to need the following fill material quantities:

a. Class 1 riprap: 2,300 cubic yards
b. Class 5Q aggregate: 700 cubic yards
c. Concrete: 700 cubic yards

Concrete will consist of pier capping concrete and concrete surrounding existing buildings. Concrete will be placed on top of new and existing fill material and graded according to designs.

1.2.2.4 Source of Material

All fill materials will be obtained from licensed quarries local to the project area. Contractors will provide source documentation and license information upon request.

1.3 Fill Site

1.3.1 Location and Size

Fill will be placed between the new SSP and any existing structures, filling the space beneath the newly constructed pier extension. Fill will be placed from the sediment surface up to the low water datum (LWD, 601.1 feet; International Great Lakes Datum, 1955).

1.3.2 Habitat Type

The Duluth Vessel Yard is located in the Duluth Harbor Basin, which is part of the St. Louis River Estuary that is both a commercial and recreational waterbody. The St. Louis River estuary is an approximately 12,000 acre freshwater estuary that drains into western Lake Superior. As such, the Duluth Vessel Yard is located within the coastal zone of Lake Superior and is subject to changes in lake levels. No wetlands exist at this site and limited terrestrial habitat exists, on the landward corners of the Vessel Yard, due to previous development and use of impervious surfaces. Aquatic habitat around the piers is limited to open water surrounding the piers, timber crib structures (which are deteriorating), and sand and silt benthic substrate. Terrestrial habitat is limited to two grassy areas with a few trees, impervious parking and work areas, and the roofs of buildings. New SSP walls and pier extensions will not significantly impact or change the makeup or quantity of habitat in the project site.

1.3.3 Timing and Duration of Discharge

A specific date for the project has not been established; however, the plan is for construction to begin in calendar year 2021 on the South Pier. Depending on timing of contracting and the contractor's ability to mobilize under short time frames, initiation of

construction could be delayed until 2022. Construction on the North Pier and East Headwall has not been scheduled at this time but will likely not begin until 2022.

1.3.4 Description of Placement Methods

Placement of the new SSP will likely be completed first. Minor excavation may be necessary at LWD to remove deleterious material that could impact the driving of SSP. The SSP will be placed as much as three feet beyond the existing structure. This alignment is to prevent the existing structures from being damaged or becoming an obstruction while driving the SSP. SSP will be embedded to a depth of 15 feet below the design dredge depth elevation (35 feet below LWD- 566.1 IGLD 1985). Final elevations will vary, but will generally be:

4) North Pier
    a) North Side: +9 feet LWD – 2 feet above the current top of wall elevation, SSP only
    b) West Side: +5 feet LWD – 4 inches above current top of concrete cap elevation, Concrete cap will match SSP elevation
    c) South Side: +5 feet LWD – 4 inches above current top of concrete cap elevation, Concrete cap will match SSP elevation
5) East Headwall: +5.33 feet LWD - 4 inches above current top of concrete cap elevation, Concrete cap and SSP elevation only, finished concrete pavement surfaces will remain the same due to fixed grades
6) South Pier All Sides: +5 feet LWD – 16 inches above current top of concrete cap elevation, Concrete cap and SSP only, finished aggregate surface within the center of the pier will remain the same due to finished floor elevations.

The space between the outside face of the existing structure and the rear face of the new SSP will then be backfilled up to the LWD and topped with an aggregate to provide a working surface for the construction of concrete pavements, structural slabs, and foundations.

2. Factual Determination

2.1 Physical Substrate Determinations

The substrate is submerged fine grained sand. This will be covered with MnDOT Class 1 riprap up to LWD and capped with MnDOT 5Q aggregate up to the final project elevation. This will cover approximately 0.15 acres of aquatic soft-bottom benthic habitat with stone fill.

2.2 Water Circulation, Fluctuation, and Salinity Determinations

The project site is adjacent to the Federally maintained navigation channel of Duluth-Superior Harbor, in the Duluth Harbor Basin. The position of fill behind the SSP walls of the Duluth Vessel Yard Piers would have no effect on water flows through the St. Louis River Estuary. Water level fluctuation is dominated by Lake Superior levels which would not be affected by the proposed fill. Salinity is not a consideration as this is a fresh water environment. There would be no changes to water chemistry as the fill materials are inert.

2.3 Suspended Particulate/Turbidity Determinations

During construction, there will be temporary increases in water turbidity. These will be minor and limited in duration to the period when SSP is being installed. After the SSP is in place, all work will occur behind the SSP which will contain and turbidity or materials disturbed by construction activity.

2.4 Contaminant Determinations

The SSP and infill will be constructed using new materials, and clean riprap and aggregate. The St. Louis River Estuary is one of the Great Lakes Areas of Concerns (AOC) and includes Beneficial Use Impairment (BUIs) restrictions on dredging due to contaminated sediments (Polychlorinated dibenzo-p-dioxins and furans) and fish consumption advisories due to mercury levels in fish. Characterization of sediments from the navigation channel and anchorage basin have determined these sediments to be meet all criteria for in-water placement in addition to posing no risk to human health.

2.5 Aquatic Ecosystem Organism Determinations

The fill site provides some limited aquatic and benthic habitat as the area is largely uniform, industrialized, and regularly disturbed by USACE operations. Construction impacts would disrupt existing habitat at the site, and its use by fish and wildlife. However, most wildlife would leave or avoid the project site due to construction noise and activity. Impacts to wildlife, in general, would be negligible and no additional or special actions are required to minimize impacts to the aquatic ecosystem during project construction beyond applicable measures to protect the waters of the St. Louis River Estuary.

2.6 Federally Listed Species

The proposed project actions would eliminate approximately 0.15 acres of potential habitat in the St. Louis River Estuary but are not anticipated to impact any Federally listed Threatened or Endangered species. The Vessel Yard is not critical habitat for any of the listed species and all identified species are mobile (and will likely leave or avoid the project area). As such, the project actions would not impact the continued survival or reproduction of any species and no additional or special actions are required to minimize impacts to listed species.

2.7 Proposed Disposal Site Determinations

A majority of work will occur within the water surrounding the existing piers at the Duluth Vessel Yard. Impacts are anticipated to be limited to temporary, minor increases in turbidity in the vicinity of the Vessel Yard while SSP is being installed. Following completion of SSP walls, work will occur behind said walls that will act as a barrier to prevent mixing with adjacent water. No significant adverse impacts on municipal or private water supplies, recreational or commercial fisheries, water related recreation, aesthetics, parks, national seashores, wilderness areas, research sites, or similar preserves would be expected. The Duluth Vessel Yard is on the National Register of Historic Places, however an Assessment of Effects determined that no adverse effect would result to the historic nature of the property. Fishing and recreation in the area is

mostly by boats, which do not normally enter the project area and would be able to avoid the area.

2.8 Determination of Cumulative and Secondary Effects on the Aquatic Ecosystem

No significant cumulative or secondary impacts are expected to occur.

3. Finding of Compliance

3.1 Adaptation of the Section 404(b)(1) Guidelines to this Evaluation

No significant adaptations of the guidelines were made relative to this evaluation.

3.2 Evaluation of Alternatives

Alternatives to address the impacts to the structural integrity of the Duluth Vessel Yard Piers include:

1. **No Action** – No Federal action would be taken, allowing continued deterioration of the existing structures.
2. **Alternative 2** – In-Kind replacement of Piers.
3. **Alternative 3** – Encasing the existing piers in steel sheet pile (SSP) and a concrete cap.

No action is not recommended because it would not address the deterioration of the Vessel Yard Piers and could result in safety issues and loss of functionality of the Vessel Yard and the ability of USACE to achieve the Mission in the Duluth-Superior Harbor. Alternative 2 is not recommended because it would involve more intensive demolition and removal of existing structures and would result in greater turbidity and loss of function of the piers during construction. Therefore, the proposed action is Alternative 3 – Encasing the existing piers in SSP and a concrete cap.

3.3 Compliance with State Water Quality Standards

This project is being coordinated with the State of Minnesota for review under Section 401 of the Clean Water Act (CWA). Water quality certification, pursuant to CWA Section 401 is being completed in coordination with the Minnesota Pollution Control Agency.

3.4 Compliance with Applicable Toxic Effluent Standard or Prohibition under Section 307 of the Clean Water Act (CWA)

Since the fill materials are uncontaminated, placement would not violate the Toxic Effluent Standards of Section 307 of the CWA.

3.5 Compliance with the Endangered Species Act (ESA) of 1973

This project was evaluated for all effects on Federally listed species. A determination for all species identified by the U.S. Fish and Wildlife Service Information for Planning and Consultation (IPaC) system was recorded in an Environmental Assessment and provided to the USFWS.

3.6 Compliance with Specified Protection Measures for Marine Sanctuaries Designated by the Marine Protection Restoration and Sanctuary Act of 1972

This is not applicable as the project site is in a freshwater system and does not constitute a designated marine sanctuary.

3.7 Evaluation of the Extent Waters of the United States would be degraded

The proposed fill placement would not result in significant adverse effects on human health and welfare, including municipal and private water supplies, recreational and commercial fishing, plankton, fish, shellfish, wildlife, and special aquatic sites. Life stages of aquatic or other wildlife species would not be adversely affected. No significant adverse effects to the aquatic ecosystem in the areas of diversity, productivity, stability, recreation, aesthetic, and economic value would occur.

3.8 Appropriate and Practicable steps taken to minimize potential adverse impacts of the discharge on aquatic ecosystems

Appropriate steps taken to minimize the adverse effects on the aquatic ecosystem at the proposed site include the use of uncontaminated fill materials, installation of fill behind previously installed SSP, and project coordination with the Minnesota Pollution Control Agency, Minnesota Department of Natural Resources, USFWS, and City of Duluth.

3.9 Compliance with Section 404(b)(1) Guidelines

On the basis of the “Guidelines for Specification of Disposal Sites for Dredged or Fill Material” (40 CFR part 230), it has been determined that the proposed fill activity is in compliance with Section 404 of the 1977 Clean Water Act.

Appendix G: CZMA Federal Consistency Determination