APPENDIX B:

ENGINEERING APPENDIX

COLLIER COUNTY COASTAL STORM RISK MANAGEMENT (CSRM) STUDY

JULY 2020

US Army Corps of Engineers®

Norfolk District

SUB-APPENDICES

1. **STRUCTURAL SUB-APPENDIX**
2. **GEOTECHNICAL SUB-APPENDIX**
3. **HYDRAULICS, HYDROLOGY & COASTAL SUB-APPENDIX**
4. **COST ENGINEERING SUB-APPENDIX**
5. **COLLIER COUNTY 50-YEAR SAND SUPPLY LETTER SUB-APPENDIX**

US Army Corps of Engineers®

STRUCTURAL

SUB - APPENDIX

US Army Corps of Engineers®

Norfolk District

Collier County Coastal Storm Risk Management Study

Norfolk, Virginia

STRUCTURAL SUB-APPENDIX

JULY 2020

Table of Contents

CHAPTER 1 INTRODUCTION 3
CHAPTER 2 T-WALL ANALYSIS 4
CHAPTER 3 GATE ANALYSIS 40
3.1 SURGE BARRIER GATES 40
3.1.1 MITER GATES 40
3.1.2 SECTOR GATES 40
3.1.3 BARGE GATES 40
3.1.4 SLUICE GATES 40
3.2 STREET CLOSURES 41
3.3 FLOODWALL IN WATER 41
CHAPTER 4 APPENDIX DRAWINGS 54
CHAPTER 5 REFERENCES 70

CHAPTER 1 INTRODUCTION

The examined water levels and existing geology called for the use of T-walls for design and construction. The geotechnical, hydraulic/hydrologic, and structural engineering disciplines of the PDT collaborated on the preliminary design of these measures. Initially, any wall that had a required height less than 6 feet was determined to be an earthen embankment or an I-wall with a sheet pile base. However, the geotechnical engineer found that the geology of the area would not allow for a sheet pile based I-wall. Alternatives such as secant pile based walls were looked into. It was determined that construction costs would be comparable to using T-walls for all heights. Therefore, the PDT made the decision to use T-walls for all wall heights for the estimating purposes of this study. Preliminary analysis was not performed for the I-walls, however a drawing has been provided in this sub appendix for reference. I-walls were drawn with auger cast piles but will need further analysis for future refinement and incorporation.

The following preliminary calculations cover the design of T-walls. For this level of design, the PDT investigated the design of a land specific, 20 foot wall (above grade) as this wall size gave the maximum pile spacing, clearances and geometry based on the hydraulic analyses performed. This section can be applied to most floodwall alignments in this project. An exception would be the 30 foot wall (above grade) that was designed specifically for use along the Wiggins and Doctor's Pass alignments where much of the floodwall is underwater. The width and thickness of the base, pile spacing, and pile count may vary depending on the height of the wall.

CHAPTER 2 T-WALL ANALYSIS

The following is a 10% analysis to address the usage of T-Walls for flood mitigation in the Collier County comprehensive study.

The governing criteria is EM 1110-2-2502 "Retaining and Flood Walls". The load cases used to conduct the 10% design and analysis were taken from EM 1110-2-2502. They are as follows.

1. Case C1: Full Flood Loading (Static Water Level)

2. Case C2: Goda Wave Loading

3. Case C3: Seismic Loading

4. Case C4: Construction Loading

5. Case C5: Wind Loading

The T-Wall on piles was selected as to ensure continuous stability throughout a storm event. Use of shallow soil supported foundations in a coastal region was determined not to be in accordance with USACE criteria nor good engineering practice.

Soil properties used to determine soil coefficient, K_o, was based upon existing soil characteristics from archived soil borings taken throughout the county. The soil borings were a conglomeration of the soil borings from Wiggins Pass in the 1970's & 2000's and from borings taken by contractors working for Collier County.

Uplift pressures were determined for all load cases in accordance with USACE criteria, and standard engineering practice. To mitigate the effects of hydrostatic uplift forces, a 10'-0 deep cement/bentonite cutoff wall is being considered as part of the T-wall construction. The uplift pressures for various base widths and cement/bentonite cutoff wall depths are provided in the geotechnical sub appendix.

Wave forces were developed using the Goda Method. These were considered to act in place of the hydrostatic forces ABOVE the finished grade line. Full hydrostatic lateral forces are considered to act below the finished grade as per hydrostatic laws. The Goda pressure distribution is included as part of this sub appendix.

This being a 10% design, the goal of this analysis is to ensure a stable structure that can be fully developed for design during the Planning, Engineering and Design portion of this project. It is acknowledged that minor changes to wall geometry and pile layout will be inevitable as the project progresses.

10% DESIGN FOR T-WALLS

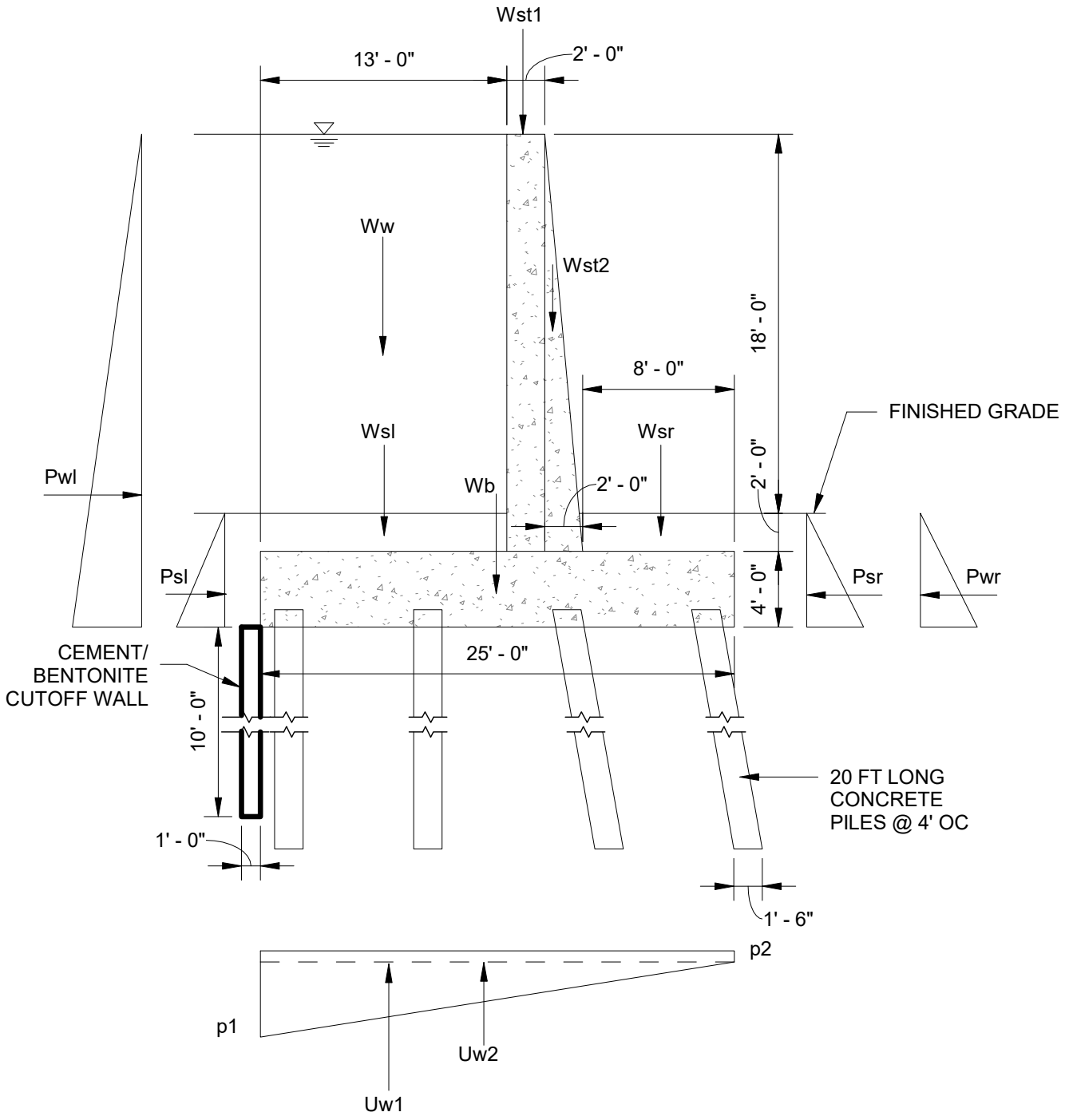

US ARMY CORPS OF ENGINEERS **COLLIER COUNTY STORM RISK MANAGEMENT STUDY**	DESIGNED BY: Designer	ISSUE DATE: NOV 2019	CONTRACT NO.:
	DRAWN BY: Author	SOLICITATION NO.:	FILE NUMBER:
(LAND) **LOAD CONDITION C1** HIGH WATER	CHECKED BY: Checker	**US Army Corps of Engineers ®**	
	SUBMITTED BY:		

CASE C1: HIGH WATER (PER EM 1110-2-2502)

SOIL PROPERTIES

γ_s =	120.00	PCF
Ø=	20.00	
c =	100.00	PSF
K_o =	0.5	

WATER PROPERTIES

γ_W =	64.00	PCF

CONCRETE PROPERTIES

γ_C =	150	PCF

UPLIFT PRESSURES

p1 =	575	psf
p2 =	572	psf

FACTOR OF SAFETY

F.S. =	1.50

WALL SECTION GEOMETRY

Height of stem =	20	ft
Height of base =	4	ft
Width of Flood Side =	13	ft
Width of Protected Side =	8	ft
Width - Top of Stem =	2	ft
Width - Bottom of Stem =	4	ft
Height of Soil =	2	ft
Width Along Alignment	4	ft
Dist Between Piles	7.33	ft
Height of Flood Water	24	ft
Height of Protected Water	6	ft
Number of Battered Piles In a Row	2	
Number of NonBatter Piles In a Row	2	
Number of Piles In a Row	4	
Number of Pile Rows	1	

FORCES / MOMENTS ABOUT PROTECTED SIDE TOE

				Arm	Overturning	Resisting	
W_{wl} =	66.56	KIPS	From W_{wl}	18.50		1231.36	
W_{sl} =	12.48	KIPS	From W_{sl}	18.50		230.88	
W_b =	60.00	KIPS	From W_b	12.50		750.00	
W_{st1} =	24.00	KIPS	From W_{st1}	11.00		264.00	
W_{st2} =	12.00	KIPS	From W_{st2}	9.33		112.00	
W_{sr} =	7.68	KIPS	From W_{sr}	4.00		30.72	
U_{w1} =	0.15	KIPS	From U_{w1}	16.67	2.50		
U_{w2} =	57.20	KIPS	From U_{w2}	12.50	715.00		
Rv	**125.37**	KIPS		**Mv**	717.50	2618.96	1901.46
P_{wl} =	73.73	KIPS	From P_{wl}	8.00	589.82		
P_{sl} =	4.32	KIPS	From P_{sl}	2.00	8.64		
P_{sr} =	4.32	KIPS	From P_{sr}	2.00		8.64	
P_{wr} =	4.61	KIPS	From P_{wr}	7.47		34.41	
Rh	**69.12**	KIPS		**Mh**	598.46	43.05	-555.42
Vr	**143.16**	KIPS		**Mr**	1315.96	2662.01	1346.04
eh	-8.04	FT					
ev	15.17	FT		FS	3.42	OK	
xR	10.74						
Rratio	0.43	RESULTANT FALLS IN KERN (TABLE 4-3)					

PILE LOADS

# PILES	4
Iy	268.89
Batter X	1
Batter Y	6
Batter	0.17

VERTICAL LOAD DISTRIBUTION

PILE	V/n [K]	Cx [FT]	(Vex/Iy) [K/FT]	(Vex/Iy)Cx [K/FT]	Pv [K]
4	31.343	11.00	1.24	13.68	45.02
3	31.343	3.67	1.24	4.56	35.90
2	31.343	-3.67	1.24	-4.56	26.78
1	31.343	-11.00	1.24	-13.68	17.67

HORIZONTAL LOAD DISTRIBUTION (ALL PILES)

PILE	Batter	Ph [K]	Net Ph [K]	Pv' [K]	Pv	Pa [K]	Pa [TONS]
4	0.00	0.00	15.43	0.00	45.02	47.59	23.80
3	0.00	0.00	15.43	0.00	35.90	39.08	19.54
2	0.17	4.46	10.96	65.78	92.57	93.21	46.61
1	0.17	2.94	12.48	74.90	92.57	93.41	46.70

NET Rh	61.71
NET Rh/PILE	15.43

HORIZONTAL LOAD DISTRIBUTION (BATTER PILES)

PILE	Batter	Ph [K]	Net Ph [K]	Pv' [K]	Pv	Pa [K]	Pa [TONS]
4	0.00	0.00	30.86	0.00	45.02	54.58	27.29
3	0.00	0.00	30.86	0.00	35.90	47.34	23.67
2	0.17	4.46	26.39	158.35	185.14	187.01	93.50
1	0.17	2.94	27.91	167.47	185.14	187.23	93.61

NET Rh	61.71
NET Rh/PILE	30.86

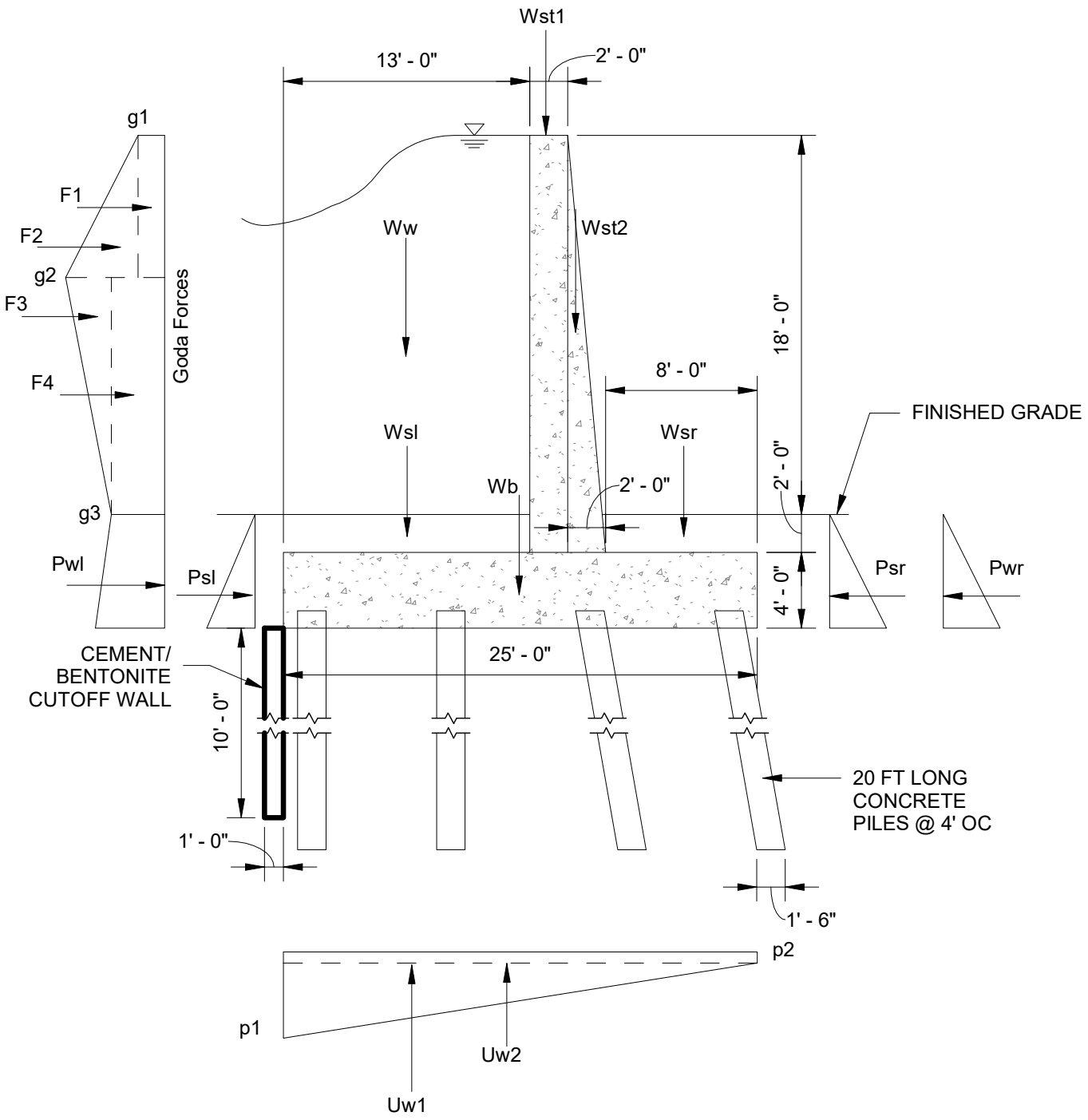

US ARMY CORPS OF ENGINEERS **COLLIER COUNTY STORM RISK MANAGEMENT STUDY**	DESIGNED BY: Designer	ISSUE DATE: NOV 2019	CONTRACT NO.:
	DRAWN BY: Author	SOLICITATION NO.:	FILE NUMBER:
(LAND) **LOAD CONDITION C2** GODA WAVE	CHECKED BY: Checker	**US Army Corps of Engineers ®**	
	SUBMITTED BY:		

CASE C2: GODA WAVE (PER EM 1110-2-2502)

SOIL PROPERTIES

γ_s =	120.00	PCF
Ø=	20.00	
c =	100.00	PSF
K_o =	0.5	

WATER PROPERTIES

γ_W =	64.00	PCF

FACTOR OF SAFETY

F.S. =	1.50	

CONCRETE PROPERTIES

γ_C =	150	PCF

UPLIFT PRESSURE

p1 =	575	psf
p2 =	572	psf

WALL SECTION GEOMETRY

Height of stem =	20	ft
Height of base =	4	ft
Width of Flood Side =	13	ft
Width of Protected Side =	8	ft
Width - Top of Stem =	2	ft
Width - Bottom of Stem =	4	ft
Height of Soil =	2	ft
Width out of page	4	ft
Dist Between Piles	7.33	ft
Height of Flood Water	24	ft
Height of Protected Water	6	ft
Number of Battered Piles In a Row	2	
Number of NonBatter Piles In a Row	2	
Number of Piles In a Row	4	
Number of Pile Rows	1	

FORCES

Goda F_1 =	0.00	KIPS
Goda F_2 =	8.04	KIPS
Goda F_3 =	1.03	KIPS
Goda F_4 =	4.84	KIPS
P_{wl}=	73.73	KIPS
P_{sl} =	4.32	KIPS
P_{sr} =	4.32	KIPS
P_{wr} =	4.61	KIPS
Rh=	83.02	KIPS
W_{wl} =	66.56	KIPS
W_{sl} =	12.48	KIPS
W_b =	60.00	KIPS
W_{st1} =	24.00	KIPS
W_{st2} =	12.00	KIPS
W_{sr} =	7.68	KIPS
U_{w1} =	0.15	KIPS
U_{w2} =	57.20	KIPS
Rv=	125.37	KIPS
Vr	150.37	
eh	-9.13	
ev	15.17	

MOMENTS ABOUT PROTECTED SIDE TOE

	Arm	Overturning	Resisting	
From F_1	28.3	0.00		
From F_2	15.60	125.41		
From F_3	9.60	9.8496		
From F_4	8.7	42.09		
From P_{wl}	8.00	589.82		
From Psl	2.00	8.64		
From Psr	2.00		8.64	
From Pwr	2.000		9.22	
Mh		775.81	17.86	-757.96
From Wwl	18.5		1231.36	
From Wsl	18.5		230.88	
From Wb	12.5		750.00	
From Wst1	11		264.00	
From Wst2	9.33		112.00	
From Wsr	4		30.72	
From Uw1	16.67	2.50		
From Uw2	12.5	715.00		
Mv		717.50	2618.96	1901.46
Mr		1493.31	2636.82	1143.50

xR 9.12 F.S. = 2.51 OK

Rratio 0.36 RESULTANT FALLS IN KERN (TABLE 4-3)

CASE C2 (EM1110-2-2502) CONT'D

Wave Pressure From Goda From CC_Wall Forces on Vertical Wall

P_1 =	0.319	ksf	swl=	10.4	ft navd 88	top of wall ele	23.00
P_2 =	0	ksf	h_c	12.60		avg ground el	5
P_3 =	0.224	ksf					

Force			Arm	Moment
Goda F_1 =	0.00	KIPS	28.30	0.00
Goda F_2 =	8.04	KIPS	15.60	125.41
Goda F_3 =	1.03	KIPS	9.60	9.85
Goda F_4 =	4.84	KIPS	8.70	42.09

PILE LOADS

# PILES	4
Iy	268.89
Batter X	1
Batter Y	6
Batter	0.17

VERTICAL LOAD DISTRIBUTION

PILE	V/n [K]	Cx [FT]	(Vex/Iy) [K/FT]	(Vex/Iy)Cx [K/FT]	Pv [K]
4	31.34	11.00	1.24	13.68	45.02
3	31.34	3.67	1.24	4.56	35.90
2	31.34	-3.67	1.24	-4.56	26.78
1	31.34	-11.00	1.24	-13.68	17.67

HORIZONTAL LOAD DISTRIBUTION (ALL PILES)

PILE	Batter	Ph [K]	Net Ph [K]	Pv' [K]	Pv	Pa [K]	Pa [TONS]
4	0.00	0.00	18.90	0.00	45.02	48.83	24.41
3	0.00	0.00	18.90	0.00	35.90	40.57	20.29
2	0.17	4.46	14.44	86.64	113.42	114.34	57.17
1	0.17	2.94	15.96	95.76	113.42	114.54	57.27

NET Rh	75.62
NET Rh/PILE	18.90

HORIZONTAL LOAD DISTRIBUTION (BATTER PILES)

PILE	Batter	Ph [K]	Net Ph [K]	Pv' [K]	Pv	Pa [K]	Pa [TONS]
4	0.00	0.00	37.81	0.00	45.02	58.79	29.39
3	0.00	0.00	37.81	0.00	35.90	52.14	26.07
2	0.17	4.46	33.34	200.06	226.85	229.28	114.64
1	0.17	2.94	34.86	209.18	226.85	229.51	114.75

NET Rh	75.62
NET Rh/PILE	37.81

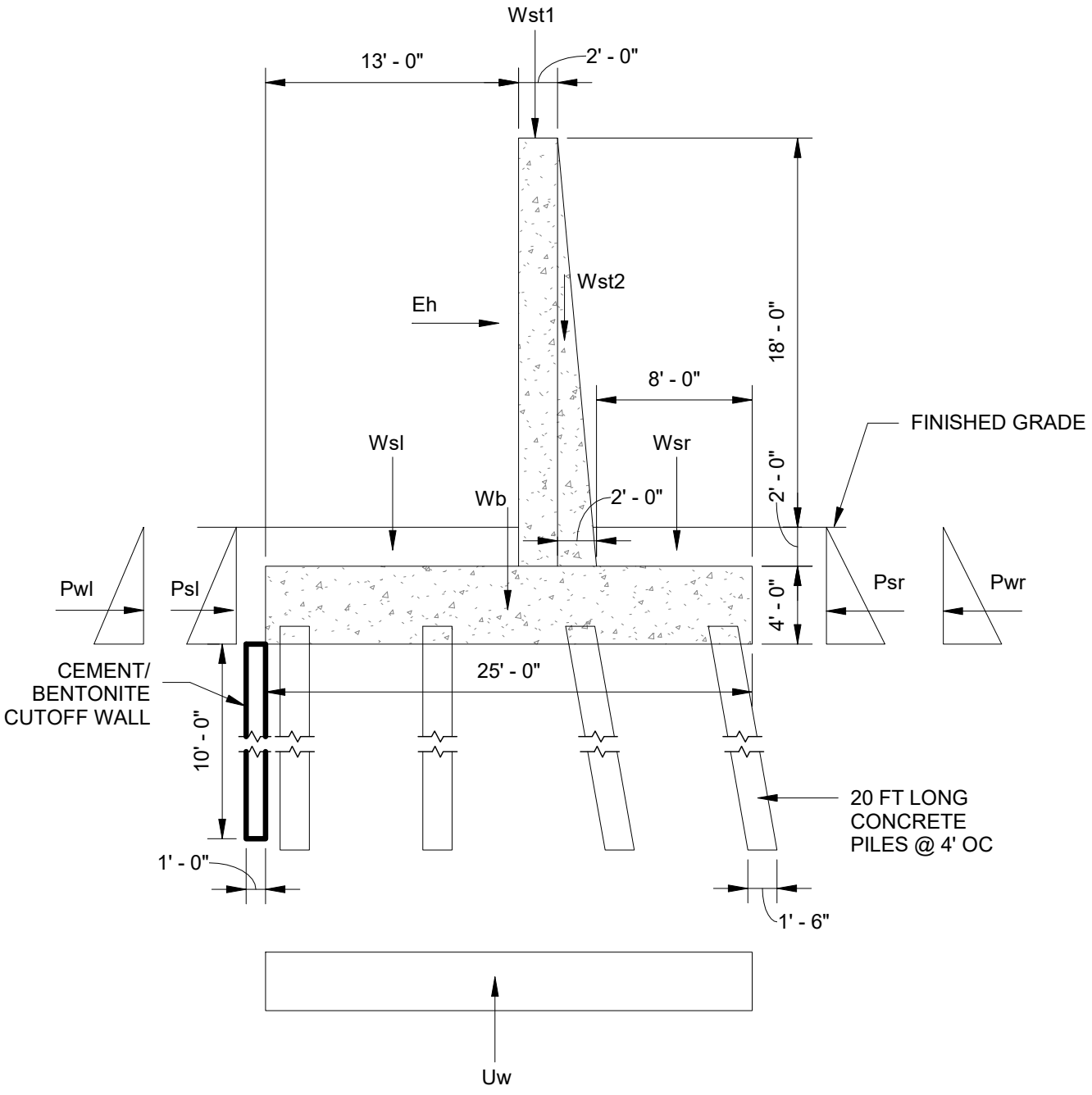

US ARMY CORPS OF ENGINEERS **COLLIER COUNTY STORM RISK MANAGEMENT STUDY**	DESIGNED BY: Designer	ISSUE DATE: NOV 2019	CONTRACT NO.:
	DRAWN BY: Author	SOLICITATION NO.:	FILE NUMBER:
(LAND) **LOAD CONDITION C3** SEISMIC	CHECKED BY: Checker	**US Army Corps of Engineers ®**	
	SUBMITTED BY:		

CASE C3: SEISMIC (PER EM 1110-2-2502)

SOIL PROPERTIES

γ_s =	120.00	PCF
Ø=	20.00	
c =	100.00	PSF
K_o =	0.5	

WATER PROPERTIES

γ_W =	64.00	PCF

FACTOR OF SAFETY

F.S. =	1.50	

CONCRETE PROPERTIES

γ_C =	150	PCF
C_s =	0.04	

UPLIFT PRESSURE

p1 =	575	psf
p2 =	572	psf

WALL SECTION GEOMETRY

Height of stem =	20	ft
Height of base =	4	ft
Width of Flood Side =	13	ft
Width of Protected Side =	8	ft
Width - Top of Stem =	2	ft
Width - Bottom of Stem =	4	ft
Height of Soil =	2	ft
Width out of page	4	ft
Dist Between Piles	7.33	ft
Height of Flood Water	24	ft
Height of Protected Water	6	ft
Number of Battered Piles In a Row	2	
Number of NonBatter Piles In a Row	2	
Number of Piles In a Row	4	
Number of Pile Rows	1	

FORCES

P_{wl} =	4.61	KIPS
P_{sl} =	4.32	KIPS
P_{sr} =	4.32	KIPS
P_{wr}=	4.61	KIPS
E_h =	1.92	KIPS
Rh=	1.92	KIPS

MOMENTS ABOUT PROTECTED SIDE TOE

	Arm	Overturning	Resisting	
From P_{wr}	2.00	9.22		
From P_{sl}	2.00	8.64		
From P_{sr}	2.00		8.64	
From P_{wl}	2.00		9.22	
From E_h	14	26.88		
Mh		44.74	17.86	-26.88

W_w =	0.00	KIPS
W_{sl} =	12.48	KIPS
W_b =	60.00	KIPS
W_{st1} =	24.00	KIPS
W_{st2} =	12.00	KIPS
W_{sr} =	7.68	KIPS
U_{w1} =	0.15	KIPS
U_{w2} =	57.20	KIPS
Rv=	58.96	KIPS
Vr	58.99	KIPS
eh	-14	
ev	11.37	
xR	10.91	
Rratio	0.44	RESULTANT FALLS IN KERN (TABLE 4-3)

	Arm	Overturning	Resisting	
From W_{wl}	18.5		0.00	
From W_{sl}	18.5		230.88	
From W_b	12.5		750.00	
From W_{st1}	11		264.00	
From W_{st2}	9.33		112.00	
From W_{sr}	4		30.72	
From U_{w1}	16.67	2.50		
From U_{w2}	12.50	715.00		
Mv		717.50	1387.60	670.10
Mr		762.24	1405.46	643.22

F.S. = 24.93 OK

PILE LOADS

# PILES	4
Iy	268.89
Batter X	1
Batter Y	6
Batter	0.17

VERTICAL LOAD DISTRIBUTION

PILE	V/n [K]	Cx [FT]	(Vex/Iy) [K/FT]	(Vex/Iy)Cx [K/FT]	Pv [K]
4	14.74	11.00	-0.25	-2.74	12.00
3	14.74	3.67	-0.25	-0.91	13.83
2	14.74	-3.67	-0.25	0.91	15.65
1	14.74	-11.00	-0.25	2.74	17.48

HORIZONTAL LOAD DISTRIBUTION (ALL PILES)

PILE	Batter	Ph [K]	Net Ph [K]	Pv' [K]	Pv	Pa [K]	Pa [TONS]
4	0.00	0.00	-0.90	0.00	12.00	12.04	6.02
3	0.00	0.00	-0.90	0.00	13.83	13.86	6.93
2	0.17	2.61	-3.51	-21.05	-5.40	6.44	3.22
1	0.17	2.91	-3.81	-22.88	-5.40	6.61	3.31

NET Rh	-3.60
NET Rh/PILE	-0.90

HORIZONTAL LOAD DISTRIBUTION (BATTER PILES)

PILE	Batter	Ph [K]	Net Ph [K]	Pv' [K]	Pv	Pa [K]	Pa [TONS]
4	0.00	0.00	-1.80	0.00	12.00	12.14	6.07
3	0.00	0.00	-1.80	0.00	13.83	13.94	6.97
2	0.17	2.61	-4.41	-26.46	-10.80	11.67	5.83
1	0.17	2.91	-4.71	-28.28	-10.80	11.79	5.89

NET Rh	-3.60
NET Rh/PILE	-1.80

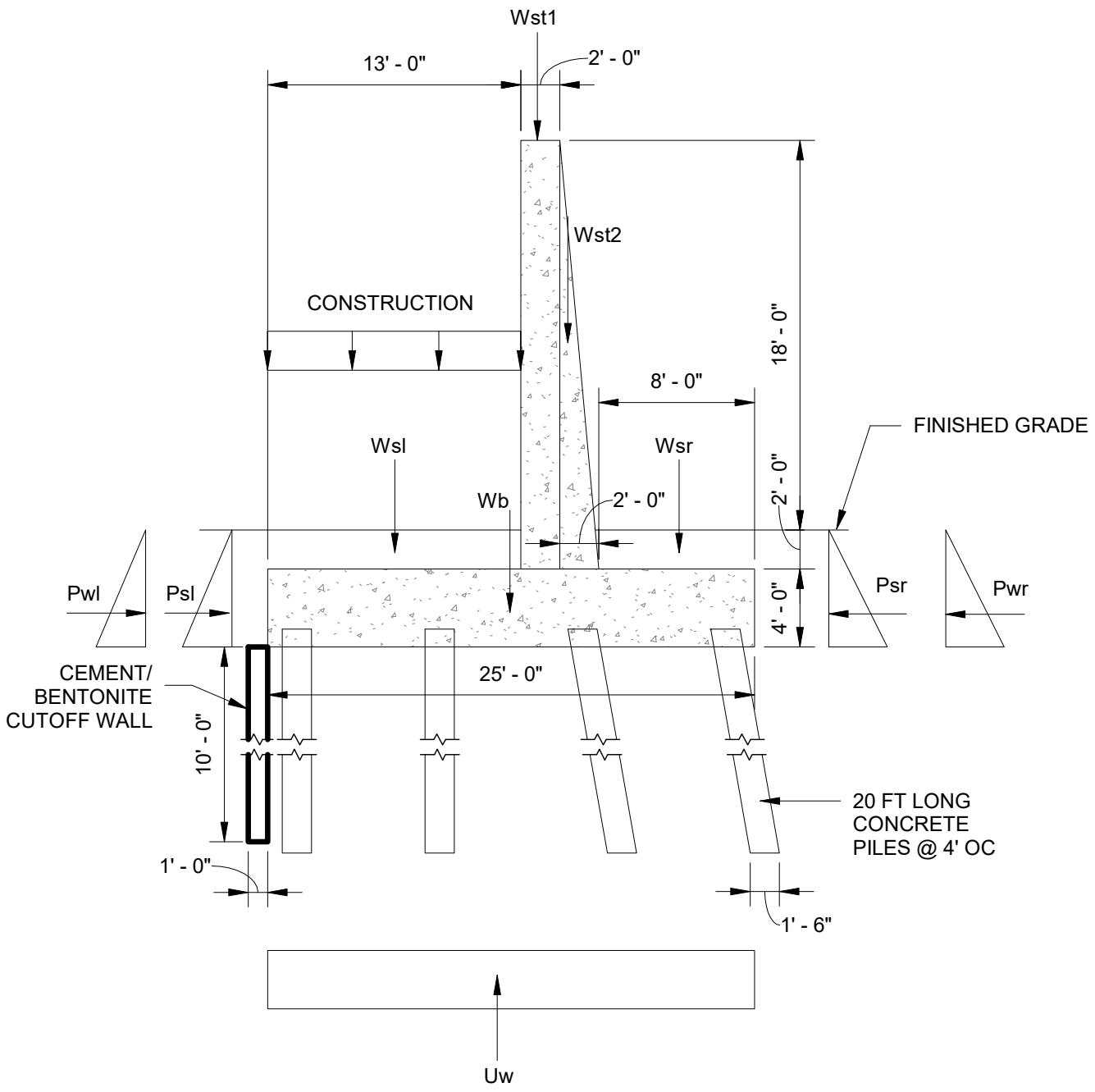

US ARMY CORPS OF ENGINEERS **COLLIER COUNTY STORM RISK MANAGEMENT STUDY**	DESIGNED BY: Designer	ISSUE DATE: NOV 2019	CONTRACT NO.:
	DRAWN BY: Author	SOLICITATION NO.:	FILE NUMBER:
(LAND) **LOAD CONDITION C4** CONSTRUCTION	CHECKED BY: Checker	**US Army Corps of Engineers ®**	
	SUBMITTED BY:		

CASE C4: CONSTRUCTION (PER EM 1110-2-2502)

SOIL PROPERTIES

γ_s =	120.00	PCF
Ø=	20.00	
c =	100.00	PSF
K_o =	0.5	

WATER PROPERTIES

γ_W =	64.00	PCF

FACTOR OF SAFETY

F.S. =	1.50

CONCRETE PROPERTIES

γ_C =	150	PCF

UPLIFT PRESSURE

p1 =	575	psf
p2 =	572	psf

WALL SECTION GEOMETRY

Height of stem =	20	ft
Height of base =	4	ft
Width of Flood Side =	13	ft
Width of Protected Side =	8	ft
Width - Top of Stem =	2	ft
Width - Bottom of Stem =	4	ft
Height of Soil =	2	ft
Width out of page	4	ft
Dist Between Piles	7.33	ft
Height of Flood Water	24	ft
Height of Protected Water	6	ft
Number of Battered Piles In a Row	2	
Number of NonBatter Piles In a Row	2	
Number of Piles In a Row	4	
Number of Pile Rows	1	

FORCES

P_{wl} =	4.61	KIPS
P_{sl} =	4.32	KIPS
P_{sr} =	4.32	KIPS
P_{wr}=	2.05	KIPS
Rh=	2.56	KIPS
W_w =	0.00	KIPS
W_{sl} =	12.48	KIPS
W_b =	60.00	KIPS
W_{st1} =	24.00	KIPS
W_{st2} =	12.00	KIPS
W_{sr} =	7.68	KIPS
U_{w1} =	0.15	KIPS
U_{w2} =	57.20	KIPS
Con	5.2	KIPS
Rv=	58.96	KIPS
Vr	58.96	KIPS
eh	-9.600	
ev	12.997	
xR	12.58	
Rratio	0.50	RESULTANT FALLS IN KERN (TABLE 4-3)

MOMENTS ABOUT PROTECTED SIDE TOE

	Arm	Overturning	Resisting	
From P_{wr}	8.00	36.86		
From P_{sl}	2.00	8.64		
From P_{sr}	2.00		8.64	
From P_{wl}	6		12.29	
Mh		45.50	20.93	-24.58
From W_w	18.5		0.00	
From W_{sl}	18.5		230.88	
From W_b	12.5		750.00	
From W_{st1}	11		264.00	
From W_{st2}	9.33		112.00	
From W_{sr}	4		30.72	
From U_{w1}	16.67	2.50		
From U_{w2}	12.5	715.00		
From Con	18.5		96.2	
Mv		717.50	1483.80	766.30
Mr		763.00	1504.73	741.72
F.S. =		31.18	OK	

PILE LOADS

# PILES	4
Iy	268.89
Batter X	1
Batter Y	6
Batter	0.17

VERTICAL LOAD DISTRIBUTION

PILE	V/n [K]	Cx [FT]	(Vex/Iy) [K/FT]	(Vex/Iy)Cx [K/FT]	Pv [K]
4	14.74	11.00	0.11	1.20	15.94
3	14.74	3.67	0.11	0.40	15.14
2	14.74	-3.67	0.11	-0.40	14.34
1	14.74	-11.00	0.11	-1.20	13.54

HORIZONTAL LOAD DISTRIBUTION (ALL PILES)

PILE	Batter	Ph [K]	Net Ph [K]	Pv' [K]	Pv	Pa [K]	Pa [TONS]
4	0.00	0.00	-0.52	0.00	15.94	15.95	7.97
3	0.00	0.00	-0.52	0.00	15.14	15.15	7.57
2	0.17	2.39	-2.91	-17.47	-3.13	4.28	2.14
1	0.17	2.26	-2.78	-16.67	-3.13	4.19	2.09

NET Rh	-2.09
NET Rh/PILE	-0.52

HORIZONTAL LOAD DISTRIBUTION (BATTER PILES)

PILE	Batter	Ph [K]	Net Ph [K]	Pv' [K]	Pv	Pa [K]	Pa [TONS]
4	0.00	0.00	-1.04	0.00	15.94	15.97	7.99
3	0.00	0.00	-1.04	0.00	15.14	15.18	7.59
2	0.17	2.39	-3.43	-20.60	-6.26	7.14	3.57
1	0.17	2.26	-3.30	-19.80	-6.26	7.08	3.54

NET Rh	-2.09
NET Rh/PILE	-1.04

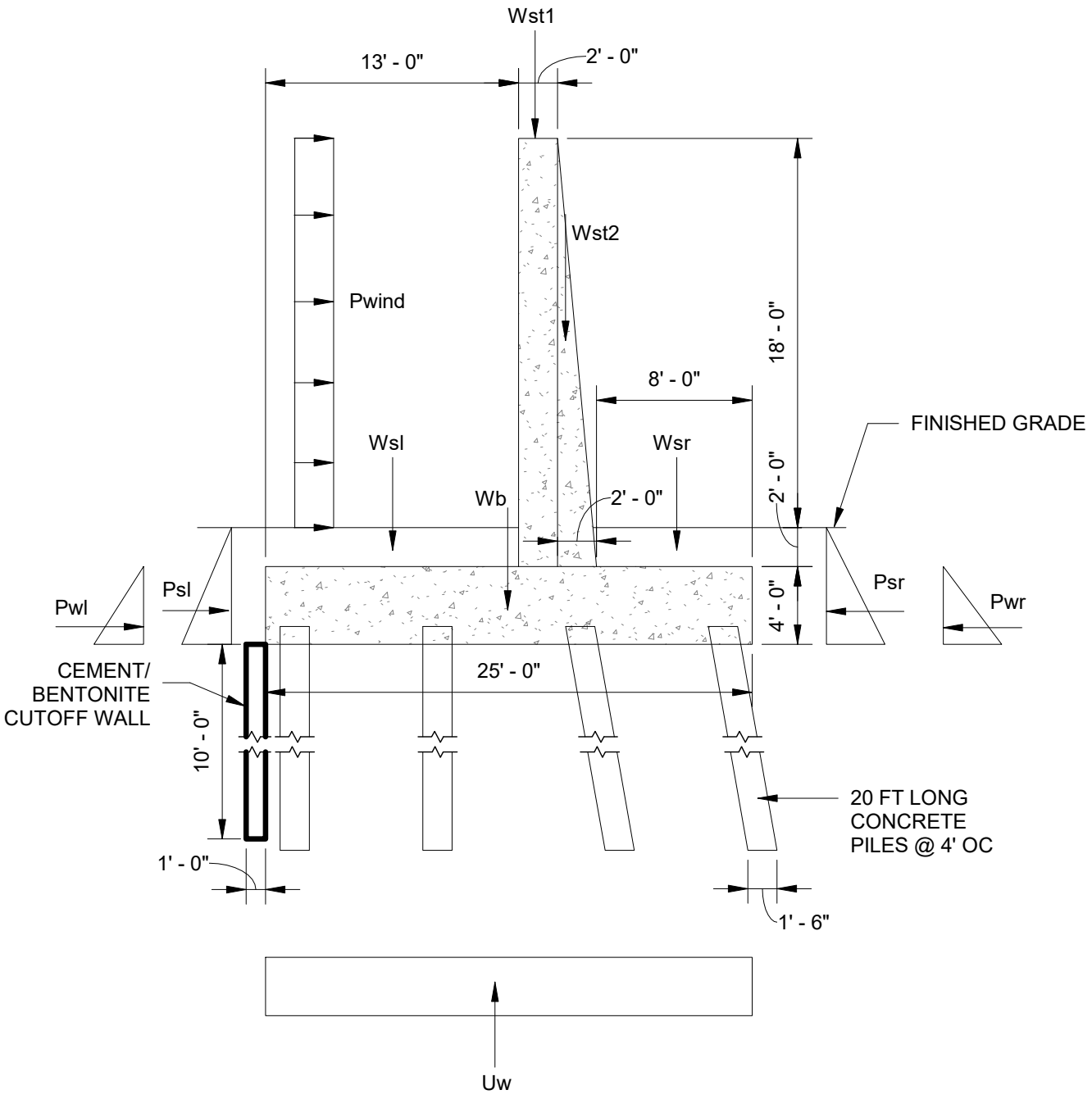

US ARMY CORPS OF ENGINEERS **COLLIER COUNTY STORM RISK MANAGEMENT STUDY**	DESIGNED BY: Designer	ISSUE DATE: NOV 2019	CONTRACT NO.:
	DRAWN BY: Author	SOLICITATION NO.:	FILE NUMBER:
(LAND) **LOAD CONDITION C5** WIND	CHECKED BY: Checker	**US Army Corps of Engineers ®**	
	SUBMITTED BY:		

CASE C5: WIND (PER EM 1110-2-2502)

SOIL PROPERTIES

γ_s =	120.00	PCF
Ø=	20.00	
c =	100.00	PSF
K_o =	0.5	

WATER PROPERTIES

γ_W =	64.00	PCF

FACTOR OF SAFETY

F.S. =	1.50	

CONCRETE PROPERTIES

γ_C =	150	PCF
Pwind	87.3	PSF

UPLIFT PRESSURE

p1 =	575	psf
p2 =	572	psf

WALL SECTION GEOMETRY

Height of stem =	20	ft
Height of base =	4	ft
Width of Flood Side =	13	ft
Width of Protected Side =	8	ft
Width - Top of Stem =	2	ft
Width - Bottom of Stem =	4	ft
Height of Soil =	2	ft
Width out of page	4	ft
Dist Between Piles	7.33	ft
Height of Flood Water	24	ft
Height of Protected Water	6	ft
Number of Battered Piles In a Row	2	
Number of NonBatter Piles In a Row	2	
Number of Piles In a Row	4	
Number of Pile Rows	1	

FORCES

P_{wl} =	4.61	KIPS
P_{sl} =	4.32	KIPS
P_{sr} =	4.32	KIPS
P_{wr}=	4.61	KIPS
Wind	6.29	KIPS
Rh=	6.29	KIPS
W_{wl} =	0.00	KIPS
W_{sl} =	12.48	KIPS
W_b =	60.00	KIPS
W_{st1} =	24.00	KIPS
W_{st2} =	12.00	KIPS
W_{sr} =	7.68	KIPS
U_{w1} =	0.15	KIPS
U_{w2} =	57.20	KIPS
Rv=	58.96	KIPS
Vr	59.29	KIPS
eh	-15	
ev	11.37	
xR	9.77	
Rratio	0.39	RESULTANT FALLS IN KERN (TABLE 4-3)

MOMENTS ABOUT PROTECTED SIDE TOE

	Arm	Overturning	Resisting	
From P_{wl}	7.47	34.41		
From Psl	2.00	8.64		
From Psr	2.00		8.64	
From Pwr	7.47		34.41	
From Wind	15	94.28		
Mh		137.33	43.05	-94.28
From Wwl	18.5		0.00	
From Wsl	18.5		230.88	
From Wb	12.5		750.00	
From Wst1	11		264.00	
From Wst2	9.33		112.00	
From Wsr	4		30.72	
From U_{w1}	16.67	2.50		
From U_{w2}	12.50	715.00		
Mv		717.50	1387.60	670.10
Mr		854.83	1430.65	575.82
F.S. =		7.11	OK	

PILE LOADS

# PILES	4
Iy	268.89
Batter X	1
Batter Y	6
Batter	0.17

VERTICAL LOAD DISTRIBUTION

PILE	V/n [K]	Cx [FT]	(Vex/Iy) [K/FT]	(Vex/Iy)Cx [K/FT]	Pv [K]
4	14.74	11.00	-0.25	-2.74	12.00
3	14.74	3.67	-0.25	-0.91	13.83
2	14.74	-3.67	-0.25	0.91	15.65
1	14.74	-11.00	-0.25	2.74	17.48

HORIZONTAL LOAD DISTRIBUTION (ALL PILES)

PILE	Batter	Ph [K]	Net Ph [K]	Pv' [K]	Pv	Pa [K]	Pa [TONS]
4	0.00	0.00	0.19	0.00	12.00	12.00	6.00
3	0.00	0.00	0.19	0.00	13.83	13.83	6.91
2	0.17	2.61	-2.42	-14.51	1.15	2.68	1.34
1	0.17	2.91	-2.72	-16.33	1.15	2.95	1.48

NET Rh	0.76
NET Rh/PILE	0.19

HORIZONTAL LOAD DISTRIBUTION (BATTER PILES)

PILE	Batter	Ph [K]	Net Ph [K]	Pv' [K]	Pv	Pa [K]	Pa [TONS]
4	0.00	0.00	0.38	0.00	12.00	12.01	6.00
3	0.00	0.00	0.38	0.00	13.83	13.83	6.92
2	0.17	2.61	-2.23	-13.36	2.29	3.20	1.60
1	0.17	2.91	-2.53	-15.18	2.29	3.41	1.71

NET Rh	0.76
NET Rh/PILE	0.38

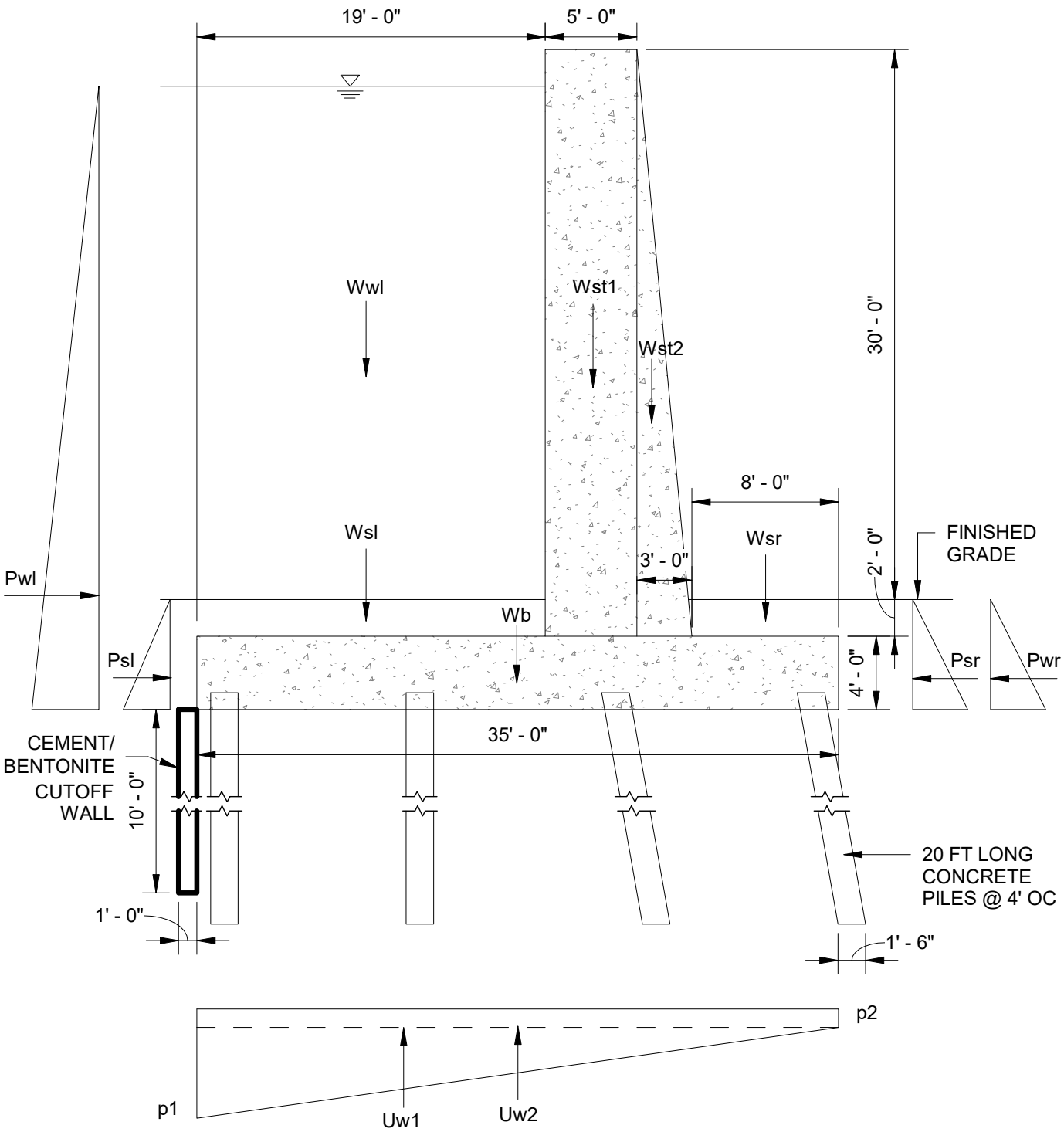

US ARMY CORPS OF ENGINEERS **COLLIER COUNTY STORM RISK MANAGEMENT STUDY**	DESIGNED BY: Designer	ISSUE DATE: FEB 2020	CONTRACT NO.:
	DRAWN BY: Author	SOLICITATION NO.:	FILE NUMBER:
(WATER) **LOAD CONDITION C1** HIGH WATER	CHECKED BY: Checker	**US Army Corps of Engineers ®**	
	SUBMITTED BY:		

CASE C1: HIGH WATER (PER EM 1110-2-2502)

SOIL PROPERTIES

γ_s =	120.00	PCF
Ø=	20.00	
c =	100.00	PSF
K_o =	0.5	

WATER PROPERTIES

γ_W =	64.00	PCF

CONCRETE PROPERTIES

γ_C =	150	PCF

UPLIFT PRESSURES

p1 =	610	psf
p2 =	605	psf

FACTOR OF SAFETY

F.S. =	1.50

WALL SECTION GEOMETRY

Height of stem =	32	ft
Height of base =	4	ft
Width of Flood Side =	19	ft
Width of Protected Side =	8	ft
Width - Top of Stem =	5	ft
Width - Bottom of Stem =	8	ft
Height of Soil =	2	ft
Width Along Alignment	4	ft
Dist Between Piles	10.67	ft
Height of Flood Water	36	ft
Height of Protected Water	6	ft
Number of Battered Piles In a Row	2	
Number of NonBatter Piles In a Row	2	
Number of Piles In a Row	4	
Number of Pile Rows	1	

FORCES / MOMENTS ABOUT PROTECTED SIDE TOE

				Arm	Overturning	Resisting	
W_{wl} =	155.65	KIPS	From W_{wl}	25.50		3969.02	
W_{sl} =	18.24	KIPS	From W_{sl}	25.50		465.12	
W_b =	84.00	KIPS	From W_b	17.50		1470.00	
W_{st1} =	96.00	KIPS	From W_{st1}	13.50		1296.00	
W_{st2} =	28.80	KIPS	From W_{st2}	10.00		288.00	
W_{sr} =	7.68	KIPS	From W_{sr}	4.00		30.72	
U_{w1} =	0.35	KIPS	From U_{w1}	23.33	8.17		
U_{w2} =	84.70	KIPS	From U_{w2}	17.50	1482.25		
Rv	**305.32**	KIPS		**Mv**	1490.42	7518.86	6028.45
P_{wl} =	165.89	KIPS	From P_{wl}	12.00	1990.66		
P_{sl} =	4.32	KIPS	From P_{sl}	2.00	8.64		
P_{sr} =	4.32	KIPS	From P_{sr}	2.00		8.64	
P_{wr} =	4.61	KIPS	From P_{wr}	7.47		34.41	
Rh	**161.28**	KIPS		**Mh**	1999.30	43.05	-1956.25
Vr	**345.30**	KIPS		**Mr**	3489.71	7561.91	4072.20
eh	-12.13	FT					
ev	19.74	FT		FS	3.08	OK	
xR	13.34						
Rratio	0.38	RESULTANT FALLS IN KERN (TABLE 4-3)					

PILE LOADS

# PILES	4
Iy	568.89
Batter X	1
Batter Y	6
Batter	0.17

VERTICAL LOAD DISTRIBUTION

PILE	V/n [K]	Cx [FT]	(Vex/Iy) [K/FT]	(Vex/Iy)Cx [K/FT]	Pv [K]
4	76.33	16.00	1.20	19.28	95.61
3	76.33	5.33	1.20	6.43	82.75
2	76.33	-5.33	1.20	-6.43	69.90
1	76.33	-16.00	1.20	-19.28	57.05

HORIZONTAL LOAD DISTRIBUTION (ALL PILES)

PILE	Batter	Ph [K]	Net Ph [K]	Pv' [K]	Pv	Pa [K]	Pa [TONS]
4	0.00	0.00	35.03	0.00	95.61	101.82	50.91
3	0.00	0.00	35.03	0.00	82.75	89.86	44.93
2	0.17	11.65	23.38	140.28	210.18	211.48	105.74
1	0.17	9.51	25.52	153.13	210.18	211.72	105.86

NET Rh	140.12
NET Rh/PILE	35.03

HORIZONTAL LOAD DISTRIBUTION (BATTER PILES)

PILE	Batter	Ph [K]	Net Ph [K]	Pv' [K]	Pv	Pa [K]	Pa [TONS]
4	0.00	0.00	70.06	0.00	95.61	118.53	59.26
3	0.00	0.00	70.06	0.00	82.75	108.43	54.21
2	0.17	11.65	58.41	350.46	420.36	424.40	212.20
1	0.17	9.51	60.55	363.31	420.36	424.70	212.35

NET Rh	140.12
NET Rh/PILE	70.06

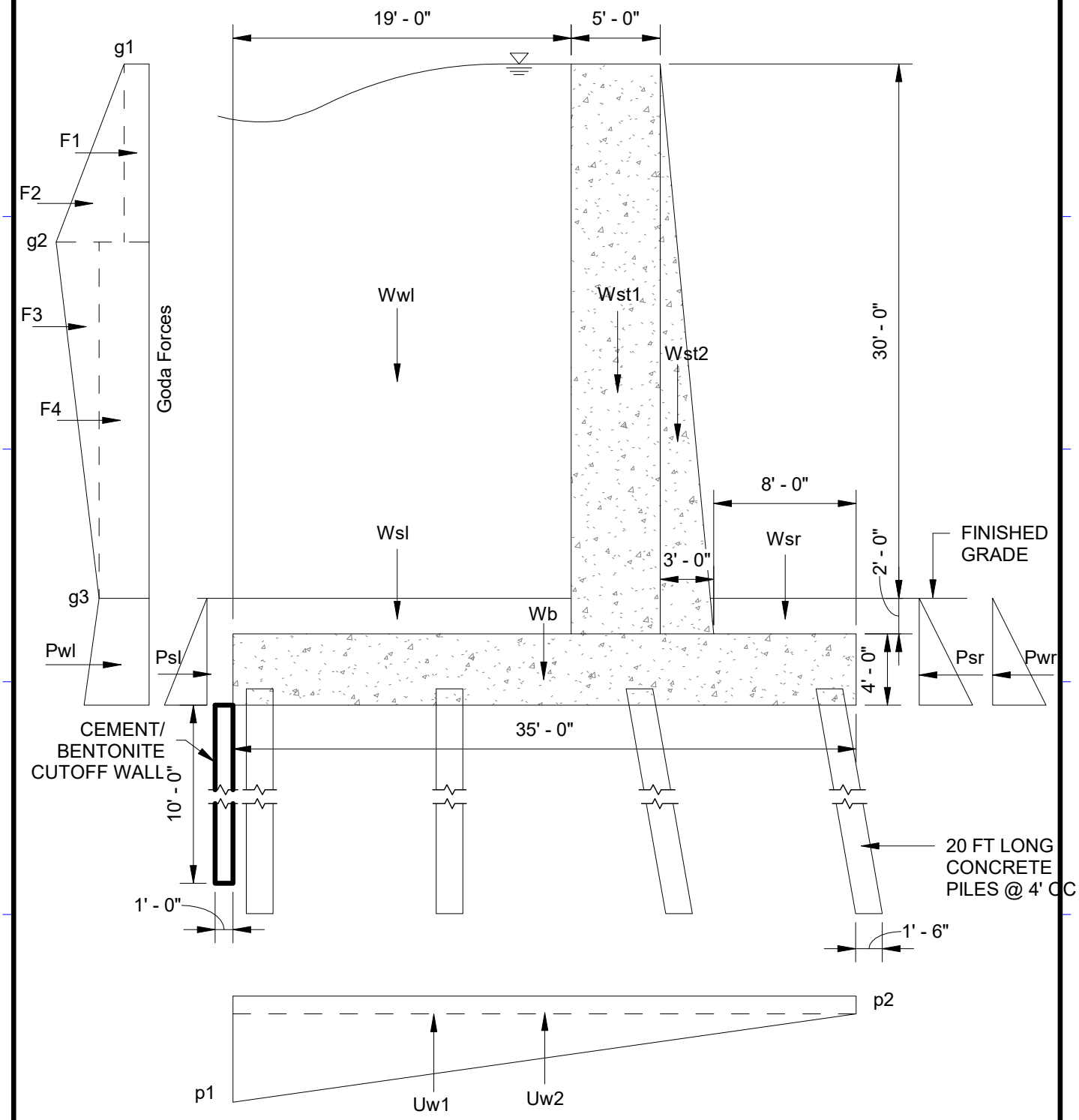

US ARMY CORPS OF ENGINEERS COLLIER COUNTY STORM RISK MANAGEMENT STUDY	DESIGNED BY: Designer	ISSUE DATE: FEB 2020	CONTRACT NO.:
	DRAWN BY: Author	SOLICITATION NO.:	FILE NUMBER:
(WATER) LOAD CONDITION C2 GODA WAVE	CHECKED BY: Checker	**US Army Corps of Engineers ®**	
	SUBMITTED BY:		

CASE C2: GODA WAVE (PER EM 1110-2-2502)

SOIL PROPERTIES

γ_s =	120.00	PCF
Ø=	20.00	
c =	100.00	PSF
K_o =	0.5	

WATER PROPERTIES

γ_W =	64.00	PCF

FACTOR OF SAFETY

F.S. =	1.50	

CONCRETE PROPERTIES

γ_C =	150	PCF

UPLIFT PRESSURE

p1 =	610	psf
p2 =	605	psf

WALL SECTION GEOMETRY

Height of stem =	32	ft
Height of base =	4	ft
Width of Flood Side =	19	ft
Width of Protected Side =	8	ft
Width - Top of Stem =	5	ft
Width - Bottom of Stem =	8	ft
Height of Soil =	2	ft
Width out of page	4	ft
Dist Between Piles	10.67	ft
Height of Flood Water	36	ft
Height of Protected Water	6	ft
Number of Battered Piles In a Row	2	
Number of NonBatter Piles In a Row	2	
Number of Piles In a Row	4	
Number of Pile Rows	1	

FORCES

Goda F_1 =	0.00	KIPS
Goda F_2 =	40.83	KIPS
Goda F_3 =	0.15	KIPS
Goda F_4 =	19.68	KIPS
P_{wl}=	165.89	KIPS
P_{sl} =	4.32	KIPS
P_{sr} =	4.32	KIPS
P_{wr} =	4.61	KIPS
Rh=	221.94	KIPS
W_{wl} =	155.65	KIPS
W_{sl} =	18.24	KIPS
W_b =	84.00	KIPS
W_{st1} =	96.00	KIPS
W_{st2} =	28.80	KIPS
W_{sr} =	7.68	KIPS
U_{w1} =	0.35	KIPS
U_{w2} =	84.70	KIPS
Rv=	305.32	KIPS
Vr	377.46	
eh	-13.40	
ev	19.74	

MOMENTS ABOUT PROTECTED SIDE TOE

	Arm	Overturning	Resisting	
From F_1	46.05	0.00		
From F_2	19.93	813.79		
From F_3	9.93	1.523773333		
From F_4	8.95	176.16		
From P_{wl}	12.00	1990.66		
From Psl	2.00	8.64		
From Psr	2.00		8.64	
From Pwr	2.000		9.22	
Mh		2990.76	17.86	-2972.91
From Wwl	25.5		3969.02	
From Wsl	25.5		465.12	
From Wb	17.5		1470.00	
From Wst1	13.5		1296.00	
From Wst2	10.00		288.00	
From Wsr	4		30.72	
From Uw1	23.33	8.17		
From Uw2	17.5	1482.25		
Mv		1490.42	7518.86	6028.45
Mr		4481.18	7536.72	3055.54

xR 10.01

Rratio 0.29

F.S. = 2.03 OK

RESULTANT FALLS IN KERN (TABLE 4-3)

CASE C2 (EM1110-2-2502) CONT'D

Wave Pressure From Goda From CC_Wall Forces on Vertical Wall Rev3 H&H

P_1 =	0.847	ksf	swl=	10.9	ft navd 88	top of wall ele	35.00
P_2 =	0	ksf	h_c	24.10		avg ground el	5
P_3 =	0.834	ksf					

Force			Arm	Moment
Goda F_1 =	0.00	KIPS	46.05	0.00
Goda F_2 =	40.83	KIPS	19.93	813.79
Goda F_3 =	0.15	KIPS	9.93	1.52
Goda F_4 =	19.68	KIPS	8.95	176.16

PILE LOADS

# PILES	4
Iy	568.89
Batter X	1
Batter Y	6
Batter	0.17

VERTICAL LOAD DISTRIBUTION

PILE	V/n [K]	Cx [FT]	(Vex/Iy) [K/FT]	(Vex/Iy)Cx [K/FT]	Pv [K]
4	76.33	16.00	1.20	19.28	95.61
3	76.33	5.33	1.20	6.43	82.75
2	76.33	-5.33	1.20	-6.43	69.90
1	76.33	-16.00	1.20	-19.28	57.05

HORIZONTAL LOAD DISTRIBUTION (ALL PILES)

PILE	Batter	Ph [K]	Net Ph [K]	Pv' [K]	Pv	Pa [K]	Pa [TONS]
4	0.00	0.00	50.20	0.00	95.61	107.98	53.99
3	0.00	0.00	50.20	0.00	82.75	96.79	48.39
2	0.17	11.65	38.54	231.27	301.17	303.63	151.81
1	0.17	9.51	40.69	244.12	301.17	303.91	151.95

NET Rh	200.78
NET Rh/PILE	50.20

HORIZONTAL LOAD DISTRIBUTION (BATTER PILES)

PILE	Batter	Ph [K]	Net Ph [K]	Pv' [K]	Pv	Pa [K]	Pa [TONS]
4	0.00	0.00	100.39	0.00	95.61	138.63	69.32
3	0.00	0.00	100.39	0.00	82.75	130.10	65.05
2	0.17	11.65	88.74	532.44	602.35	608.85	304.42
1	0.17	9.51	90.88	545.29	602.35	609.16	304.58

NET Rh	200.78
NET Rh/PILE	100.39

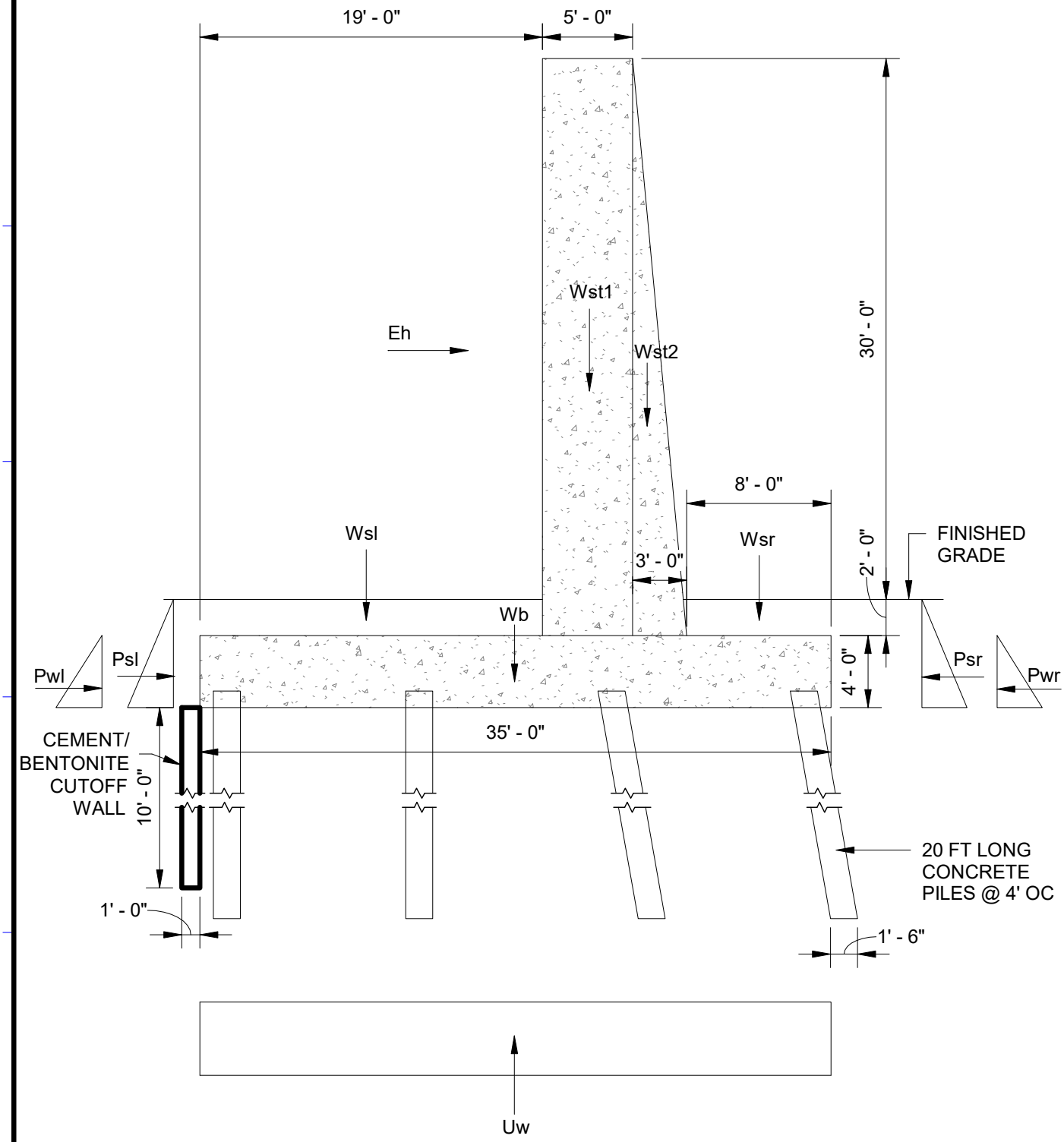

US ARMY CORPS OF ENGINEERS COLLIER COUNTY STORM RISK MANAGEMENT STUDY	DESIGNED BY: Designer	ISSUE DATE: FEB 2020	CONTRACT NO.:
	DRAWN BY: Author	SOLICITATION NO.:	FILE NUMBER:
(WATER) LOAD CONDITION C3 SEISMIC	CHECKED BY: Checker	**US Army Corps of Engineers ®**	
	SUBMITTED BY:		

US Army Corps of Engineers Norfolk District Structural Section	JOB: Collier County CSRM	
	DES BY:	DATE:
	CHK'D BY:	DATE:
	SHEET NO.	OF:

Seismic Analysis ASCE 7-10 Ch. 15

Assume Site Class D

$S_S = 0.05$

$S_1 = 0.02$

$S_{MS} = F_a S_S = 1.6\,(0.05) = 0.08$

$S_{M1} = F_v S_1 = 2.4\,(0.02) = 0.048 = 0.05$

$S_{DS} = \frac{2}{3} S_{MS} = 2/3\,(0.08) = 0.053$

$S_{D1} = 2/3\, S_{M1} = 2/3\,(0.05) = 0.032$

From ASCE 7 Ch. 15, Use $R = 2.0$

From 15.4.1,

$C_s = 0.044\, S_{DS}\, I_e$ $\quad I_e = 1.25$ Risk Cat. III

$= 0.044\,(0.053)(1.25)$

$= 0.003$, C_s shall not be taken as less than 0.01

$V = 0.30\, S_{DS}\, W\, I_e = 0.3\,(0.053)(1.25)\,W$

$= 0.02W$

CASE C3: SEISMIC (PER EM 1110-2-2502)

SOIL PROPERTIES

γ_s =	120.00	PCF
Ø=	20.00	
c =	100.00	PSF
K_o =	0.5	

WATER PROPERTIES

γ_W =	64.00	PCF

FACTOR OF SAFETY

F.S. =	1.50

CONCRETE PROPERTIES

γ_C =	150	PCF
C_s =	0.04	

UPLIFT PRESSURE

p1 =	610	psf
p2 =	605	psf

WALL SECTION GEOMETRY

Height of stem =	32	ft
Height of base =	4	ft
Width of Flood Side =	19	ft
Width of Protected Side =	8	ft
Width - Top of Stem =	5	ft
Width - Bottom of Stem =	8	ft
Height of Soil =	2	ft
Width out of page	4	ft
Dist Between Piles	10.67	ft
Height of Flood Water	36	ft
Height of Protected Water	6	ft
Number of Battered Piles In a Row	2	
Number of NonBatter Piles In a Row	2	
Number of Piles In a Row	4	
Number of Pile Rows	1	

FORCES

P_{wl} =	4.61	KIPS
P_{sl} =	4.32	KIPS
P_{sr} =	4.32	KIPS
P_{wr}=	4.61	KIPS
E_h =	4.176	KIPS
Rh=	4.18	KIPS

MOMENTS ABOUT PROTECTED SIDE TOE

	Arm	Overturning	Resisting	
From P_{wr}	2.00	9.22		
From P_{sl}	2.00	8.64		
From P_{sr}	2.00		8.64	
From P_{wl}	2.00		9.22	
From E_h	20	83.52		
Mh		101.38	17.86	-83.52

W_w =	0.00	KIPS
W_{sl} =	18.24	KIPS
W_b =	84.00	KIPS
W_{st1} =	96.00	KIPS
W_{st2} =	28.80	KIPS
W_{sr} =	7.68	KIPS
U_{w1} =	0.35	KIPS
U_{w2} =	84.70	KIPS
Rv=	150.02	KIPS

	Arm	Overturning	Resisting	
From W_{wl}	25.5		0.00	
From W_{sl}	25.5		465.12	
From W_b	17.5		1470.00	
From W_{st1}	13.5		1296.00	
From W_{st2}	10.00		288.00	
From W_{sr}	4		30.72	
From U_{w1}	23.33	8.17		
From U_{w2}	17.50	1482.25		
Mv		1490.42	3549.84	2059.42
Mr		1591.79	3567.70	1975.90

Vr	150.08	KIPS
eh	-20	
ev	13.73	
xR	13.17	
Rratio	0.38	RESULTANT FALLS IN KERN (TABLE 4-3)

F.S. = 24.66 OK

PILE LOADS

# PILES	4
Iy	568.89
Batter X	1
Batter Y	6
Batter	0.17

VERTICAL LOAD DISTRIBUTION

PILE	V/n [K]	Cx [FT]	(Vex/Iy) [K/FT]	(Vex/Iy)Cx [K/FT]	Pv [K]
4	37.51	16.00	-0.99	-15.92	21.59
3	37.51	5.33	-0.99	-5.31	32.20
2	37.51	-5.33	-0.99	5.31	42.81
1	37.51	-16.00	-0.99	15.92	53.42

HORIZONTAL LOAD DISTRIBUTION (ALL PILES)

PILE	Batter	Ph [K]	Net Ph [K]	Pv' [K]	Pv	Pa [K]	Pa [TONS]
4	0.00	0.00	-2.97	0.00	21.59	21.79	10.90
3	0.00	0.00	-2.97	0.00	32.20	32.34	16.17
2	0.17	7.14	-10.10	-60.60	-17.79	20.46	10.23
1	0.17	8.90	-11.87	-71.22	-17.79	21.39	10.69

NET Rh	-11.86
NET Rh/PILE	-2.97

HORIZONTAL LOAD DISTRIBUTION (BATTER PILES)

PILE	Batter	Ph [K]	Net Ph [K]	Pv' [K]	Pv	Pa [K]	Pa [TONS]
4	0.00	0.00	-5.93	0.00	21.59	22.39	11.19
3	0.00	0.00	-5.93	0.00	32.20	32.74	16.37
2	0.17	7.14	-13.07	-78.40	-35.59	37.91	18.96
1	0.17	8.90	-14.83	-89.01	-35.59	38.56	19.28

NET Rh	-11.86
NET Rh/PILE	-5.93

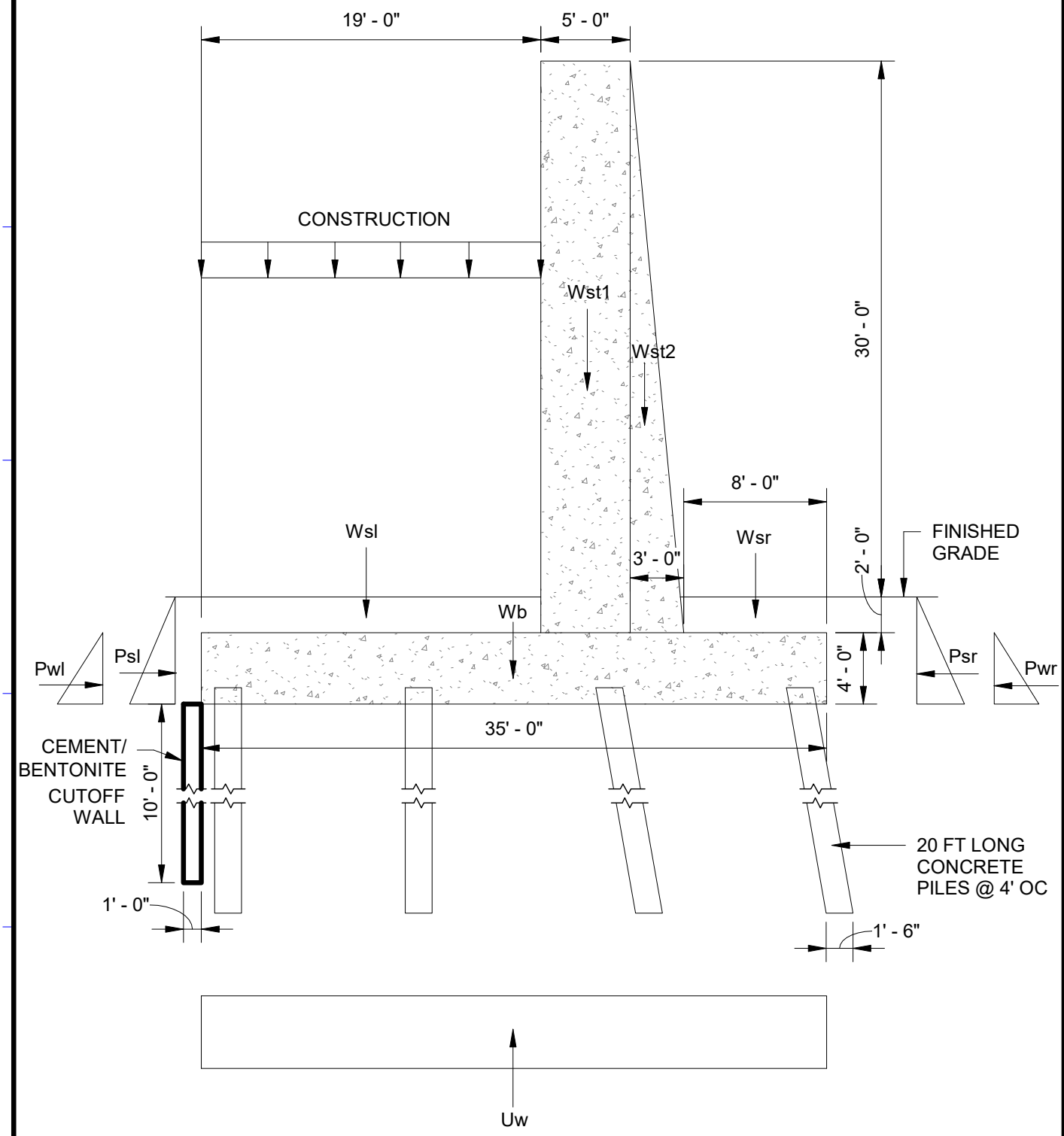

US ARMY CORPS OF ENGINEERS **COLLIER COUNTY STORM RISK MANAGEMENT STUDY**	DESIGNED BY: Designer	ISSUE DATE: FEB 2020	CONTRACT NO.:
	DRAWN BY: Author	SOLICITATION NO.:	FILE NUMBER:
(WATER) **LOAD CONDITION C4** CONSTRUCTION	CHECKED BY: Checker	**US Army Corps of Engineers ®**	
	SUBMITTED BY:		

CASE C4: CONSTRUCTION (PER EM 1110-2-2502)

SOIL PROPERTIES			WALL SECTION GEOMETRY		
γ_s =	120.00	PCF	Height of stem =	32	ft
Ø=	20.00		Height of base =	4	ft
c =	100.00	PSF	Width of Flood Side =	19	ft
K_o =	0.5		Width of Protected Side =	8	ft
WATER PROPERTIES			Width - Top of Stem =	5	ft
γ_W =	64.00	PCF	Width - Bottom of Stem =	8	ft
FACTOR OF SAFETY			Height of Soil =	2	ft
F.S. =	1.50		Width out of page	4	ft
CONCRETE PROPERTIES			Dist Between Piles	10.67	ft
γ_C =	150	PCF	Height of Flood Water	36	ft
UPLIFT PRESSURE			Height of Protected Water	6	ft
p1 =	610	psf	Number of Battered Piles In a Row	2	
p2 =	605	psf	Number of NonBatter Piles In a Row	2	
			Number of Piles In a Row	4	
			Number of Pile Rows	1	

FORCES			MOMENTS ABOUT PROTECTED SIDE TOE				
				Arm	Overturning	Resisting	
P_{wl} =	4.61	KIPS	From P_{wr}	12.00	55.30		
P_{sl} =	4.32	KIPS	From P_{sl}	2.00	8.64		
P_{sr} =	4.32	KIPS	From P_{sr}	2.00		8.64	
P_{wr}=	2.05	KIPS	From P_{wl}	6		12.29	
Rh=	2.56	KIPS		Mh	63.94	20.93	-43.01
W_w =	0.00	KIPS	From W_w	25.5		0.00	
W_{sl} =	18.24	KIPS	From W_{sl}	25.5		465.12	
W_b =	84.00	KIPS	From W_b	17.5		1470.00	
W_{st1} =	96.00	KIPS	From W_{st1}	13.5		1296.00	
W_{st2} =	28.80	KIPS	From W_{st2}	10.00		288.00	
W_{sr} =	7.68	KIPS	From W_{sr}	4		30.72	
U_{w1} =	0.35	KIPS	From U_{w1}	23.33	8.17		
U_{w2} =	84.70	KIPS	From U_{w2}	17.5	1482.25		
Con	7.6	KIPS	From Con	25.5		193.8	
Rv=	150.02	KIPS		Mv	1490.42	3743.64	2253.22
Vr	150.02	KIPS		Mr	1554.35	3764.57	2210.22
eh	-16.800						
ev	15.019			F.S. =	52.39	OK	
xR	14.73						
Rratio	0.42	RESULTANT FALLS IN KERN (TABLE 4-3)					

PILE LOADS

# PILES	4
Iy	568.89
Batter X	1
Batter Y	6
Batter	0.17

VERTICAL LOAD DISTRIBUTION

PILE	V/n [K]	Cx [FT]	(Vex/Iy) [K/FT]	(Vex/Iy)Cx [K/FT]	Pv [K]
4	37.51	16.00	-0.65	-10.47	27.04
3	37.51	5.33	-0.65	-3.49	34.02
2	37.51	-5.33	-0.65	3.49	40.99
1	37.51	-16.00	-0.65	10.47	47.97

HORIZONTAL LOAD DISTRIBUTION (ALL PILES)

PILE	Batter	Ph [K]	Net Ph [K]	Pv' [K]	Pv	Pa [K]	Pa [TONS]
4	0.00	0.00	-3.07	0.00	27.04	27.21	13.61
3	0.00	0.00	-3.07	0.00	34.02	34.15	17.08
2	0.17	6.83	-9.90	-59.39	-18.40	20.89	10.45
1	0.17	8.00	-11.06	-66.37	-18.40	21.47	10.74

NET Rh	-12.27
NET Rh/PILE	-3.07

HORIZONTAL LOAD DISTRIBUTION (BATTER PILES)

PILE	Batter	Ph [K]	Net Ph [K]	Pv' [K]	Pv	Pa [K]	Pa [TONS]
4	0.00	0.00	-6.13	0.00	27.04	27.73	13.86
3	0.00	0.00	-6.13	0.00	34.02	34.56	17.28
2	0.17	6.83	-12.97	-77.80	-36.80	39.02	19.51
1	0.17	8.00	-14.13	-84.77	-36.80	39.42	19.71

NET Rh	-12.27
NET Rh/PILE	-6.13

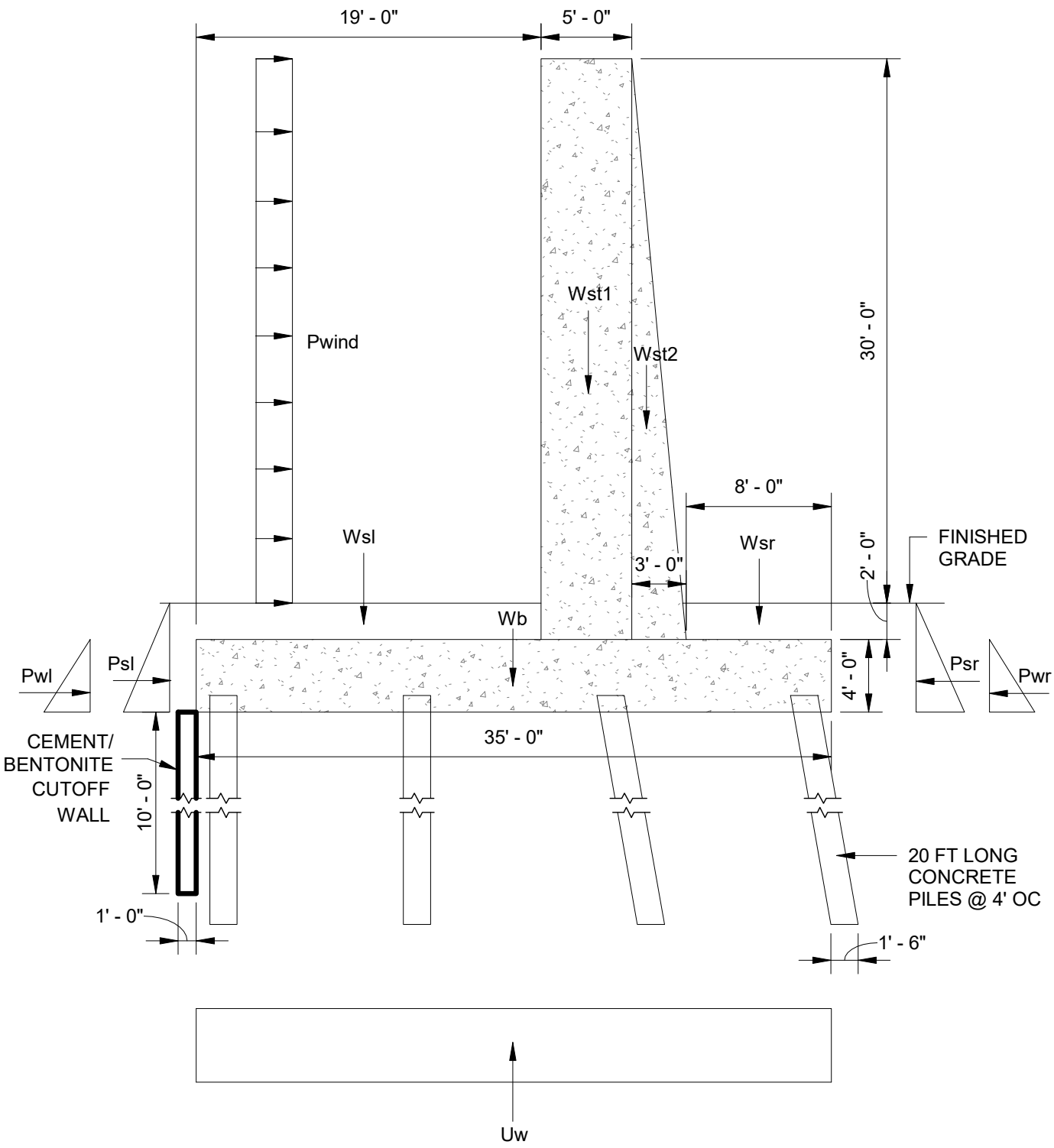

US ARMY CORPS OF ENGINEERS **COLLIER COUNTY STORM RISK MANAGEMENT STUDY**	DESIGNED BY: Designer	ISSUE DATE: FEB 2020	CONTRACT NO.:
	DRAWN BY: Author	SOLICITATION NO.:	FILE NUMBER:
(WATER) **LOAD CONDITION C5** WIND	CHECKED BY: Checker	**US Army Corps of Engineers ®**	
	SUBMITTED BY:		

US Army Corps of Engineers Norfolk District Structural Section	JOB: Collier County CSRM	
	DES BY:	DATE:
	CHK'D BY:	DATE:
	SHEET NO.	OF:

Wind Analysis ASCE 7-10 Ch. 26

For Collier County

$V = 180$ mph (Risk Category III)

$q = 0.00256\, k_z\, k_{zt}\, k_d\, V^2$

$k_z = 1.12$ Table 27.3-1, Exp D
$k_{zt} = 1.0$
$k_d = 0.85$ Table 26.6-1

$q = 0.00256\,(1.12)(1.0)(0.85)(180)^2 = 79.0$ PSF

$P = q_h\, G\, C_f$ 29.4-1

$G = 0.85$ (26.9.1)
$C_f = 1.3$ (29.4-1) $s/h = 1$, Aspect Ratio ≥ 45 very Long compared to Height

$P = (79.0)(0.85)(1.3)$

$= 87.3$ PSF

CASE C5: WIND (PER EM 1110-2-2502)

SOIL PROPERTIES

γ_s =	120.00	PCF
Ø=	20.00	
c =	100.00	PSF
K_o =	0.5	

WATER PROPERTIES

γ_W =	64.00	PCF

FACTOR OF SAFETY

F.S. =	1.50	

CONCRETE PROPERTIES

γ_C =	150	PCF
Pwind	87.3	PSF

UPLIFT PRESSURE

p1 =	610	psf
p2 =	605	psf

WALL SECTION GEOMETRY

Height of stem =	32	ft
Height of base =	4	ft
Width of Flood Side =	19	ft
Width of Protected Side =	8	ft
Width - Top of Stem =	5	ft
Width - Bottom of Stem =	8	ft
Height of Soil =	2	ft
Width out of page	4	ft
Dist Between Piles	10.67	ft
Height of Flood Water	36	ft
Height of Protected Water	6	ft
Number of Battered Piles In a Row	2	
Number of NonBatter Piles In a Row	2	
Number of Piles In a Row	4	
Number of Pile Rows	1	

FORCES

P_{wl} =	4.61	KIPS
P_{sl} =	4.32	KIPS
P_{sr} =	4.32	KIPS
P_{wr}=	4.61	KIPS
Wind	10.48	KIPS
Rh=	10.48	KIPS
W_{wl} =	0.00	KIPS
W_{sl} =	18.24	KIPS
W_b =	84.00	KIPS
W_{st1} =	96.00	KIPS
W_{st2} =	28.80	KIPS
W_{sr} =	7.68	KIPS
U_{w1} =	0.35	KIPS
U_{w2} =	84.70	KIPS
Rv=	150.02	KIPS
Vr	150.39	KIPS
eh	-21	
ev	13.73	
xR	12.26	
Rratio	0.35	RESULTANT FALLS IN KERN (TABLE 4-3)

MOMENTS ABOUT PROTECTED SIDE TOE

	Arm	Overturning	Resisting	
From P_{wl}	7.47	34.41		
From Psl	2.00	8.64		
From Psr	2.00		8.64	
From Pwr	7.47		34.41	
From Wind	21	220.00		
	Mh	263.04	43.05	-220.00
From Wwl	25.5		0.00	
From Wsl	25.5		465.12	
From Wb	17.5		1470.00	
From Wst1	13.5		1296.00	
From Wst2	10.00		288.00	
From Wsr	4		30.72	
From U_{w1}	23.33	8.17		
From U_{w2}	17.50	1482.25		
	Mv	1490.42	3549.84	2059.42
	Mr	1753.46	3592.89	1839.43
	F.S. =	9.36	OK	

PILE LOADS

# PILES	4
Iy	568.89
Batter X	1
Batter Y	6
Batter	0.17

VERTICAL LOAD DISTRIBUTION

PILE	V/n [K]	Cx [FT]	(Vex/Iy) [K/FT]	(Vex/Iy)Cx [K/FT]	Pv [K]
4	37.51	16.00	-0.99	-15.92	21.59
3	37.51	5.33	-0.99	-5.31	32.20
2	37.51	-5.33	-0.99	5.31	42.81
1	37.51	-16.00	-0.99	15.92	53.42

HORIZONTAL LOAD DISTRIBUTION (ALL PILES)

PILE	Batter	Ph [K]	Net Ph [K]	Pv' [K]	Pv	Pa [K]	Pa [TONS]
4	0.00	0.00	-1.39	0.00	21.59	21.63	10.82
3	0.00	0.00	-1.39	0.00	32.20	32.23	16.11
2	0.17	7.14	-8.53	-51.15	-8.34	11.93	5.96
1	0.17	8.90	-10.29	-61.77	-8.34	13.25	6.63

NET Rh	-5.56
NET Rh/PILE	-1.39

HORIZONTAL LOAD DISTRIBUTION (BATTER PILES)

PILE	Batter	Ph [K]	Net Ph [K]	Pv' [K]	Pv	Pa [K]	Pa [TONS]
4	0.00	0.00	-2.78	0.00	21.59	21.77	10.88
3	0.00	0.00	-2.78	0.00	32.20	32.32	16.16
2	0.17	7.14	-9.92	-59.50	-16.69	19.41	9.71
1	0.17	8.90	-11.68	-70.11	-16.69	20.37	10.19

NET Rh	-5.56
NET Rh/PILE	-2.78

CHAPTER 3 GATE ANALYSIS

3.1 SURGE BARRIER GATES

No preliminary structural analysis was performed for these features.

3.1.1 MITER GATES

Currently there are 3 Atlantic Intercoastal Waterway locks that use miter gate designs for the prevention of water with hydrostatic heads 5 to 15 feet. The width of these gates vary between 50 and 72 feet. Being these are widely used, their designs are utilized for guidance and preliminary structural layout. A pile foundation shall be used for these structures and pile arrangements similar to the existing designs are used for planning purposes. Actual forces and overturning analysis have not been conducted but existing design ensure that the layouts we used can be developed with minor alterations as the project progresses.

3.1.2 SECTOR GATES

For the sector gate in the Wiggins/Doctors Pass areas, the New Bedford / Fair Haven (NBFH) Barrier was used as the "go by" structure for planning purposes. The requirements for the Wiggins/Doctors Pass gates are very similar to the NBFH barrier with similar width, hydrostatic head requirements and geometry. We shall use a pile supported foundation and have laid out a pile arrangement to meet anticipated forces. The pile arrangement is based upon similar structures of size and weight. Actual forces and overturning analysis have not been conducted but existing design ensure that the layouts we used can be developed with minor alterations as the project progresses.

3.1.3 BARGE GATES

Barge gates were considered due to the ability to provide a continuous 150 foot opening at Wiggins Pass without any obstruction. The barge gate concept drawings from the "Louisiana Coastal Protection and Restoration Authority (CPRA) Bayou Tigre Flood Control Project Basis of Design Report" was used as a preliminary "go by" for planning. The barge gate abutments/walls are comprised of sheet piles which cannot be driven into rock without damage. Therefore, further geotechnical exploration is needed to determine the feasibility of barge gates at Wiggins/Doctors Pass. Actual forces and overturning analysis have not been conducted but existing design ensure that the layouts we used can be developed with minor alterations as the project progresses.

3.1.4 SLUICE GATES

Vertical sluice gates are widely used in flood mitigation projects. They will be used at the culverts on Seagate Drive to control the flow of water between Outer Clam Bay and Venetian Bay and prevent any backflow during flood events. Vertical rising sluice gates are usually metal plates which can be raised or lowered, typically by machinery. Actual forces and overturning analysis have not been conducted but existing designs ensure that the layouts we used can be developed with minor alterations as the project progresses.

3.2 STREET CLOSURES

No preliminary structural analysis was performed for these features. Currently there are four working street closures along the existing Norfolk, VA floodwall that are used as “go bys” for our estimating and planning purposes. Sketches of these files are included as part of this sub appendix.

3.3 FLOODWALL IN WATER

The tidal wall design for Wiggins/Doctors Pass, is to be used in areas between miter and sector gates. The tidal wall design is already incorporated into the design of the maximum height floodwall. This design can withstand soil and hydro static head differentials of 20 feet or more. Its structural design, deep foundations, construction and geometry are well suited for the application as a storm surge wall in the riverine environment of the Collier County CSRM. The design ensures that the layouts we used can be developed with minor alterations as the project progresses.

10% DESIGNS MITER GATES AND SECTOR GATES

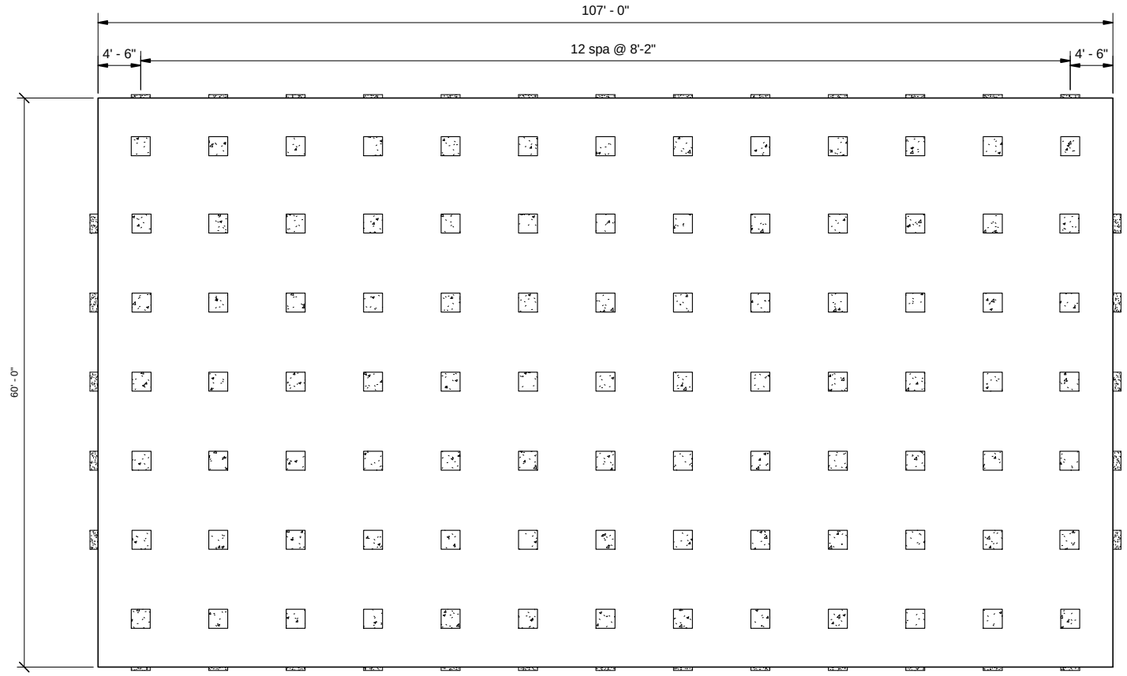

1 SINGLE TIDE GATE FOUNDATION PLAN

1/8" = 1'-0"

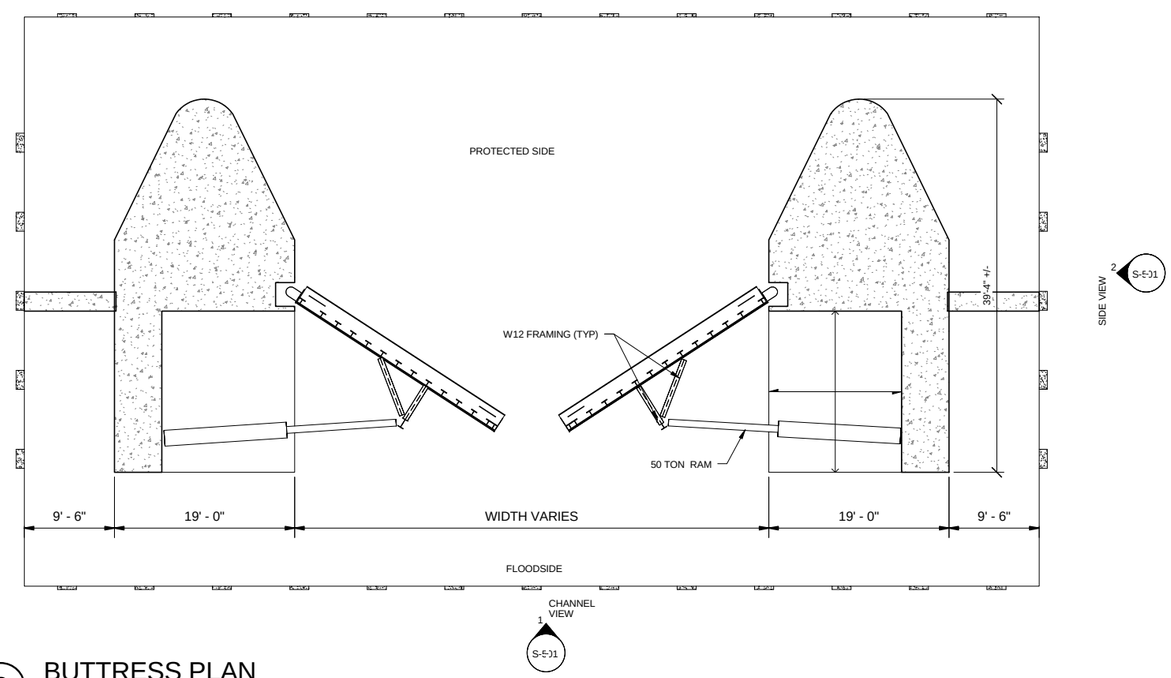

2 BUTTRESS PLAN

1/8" = 1'-0"

US Army Corps of Engineers ®
Norfolk District

MARK	DESCRIPTION	DATE	APPR

ISSUE DATE: DD-MMM-YYYY
DESIGN BY: Designer
CKD BY: Checker
PROJECT NO. P1000001
DRAWN BY: Author
PLOT DATE:
CONTRACT NO. Contract No.
SBMT BY: Approver
NAO FILE NUMBER:
PLOT SCALE: ASIS+OVR
FILE NAME:
SIZE: 22" X 34"

US ARMY CORPS OF ENGINEERS
NORFOLK DISTRICT
Norfolk, VA

10% DESIGN SUBMITTAL

COLLIER COUNTY COASTAL STORM RISK MANAGEMENT (CSRM) STUDY

FOUNDATION PLAN
MITER TIDE GATE

SHEET IDENTIFICATION
S-101
SHEET OF 0

S-101-

ALL ELEVATIONS ARE NAVD 88

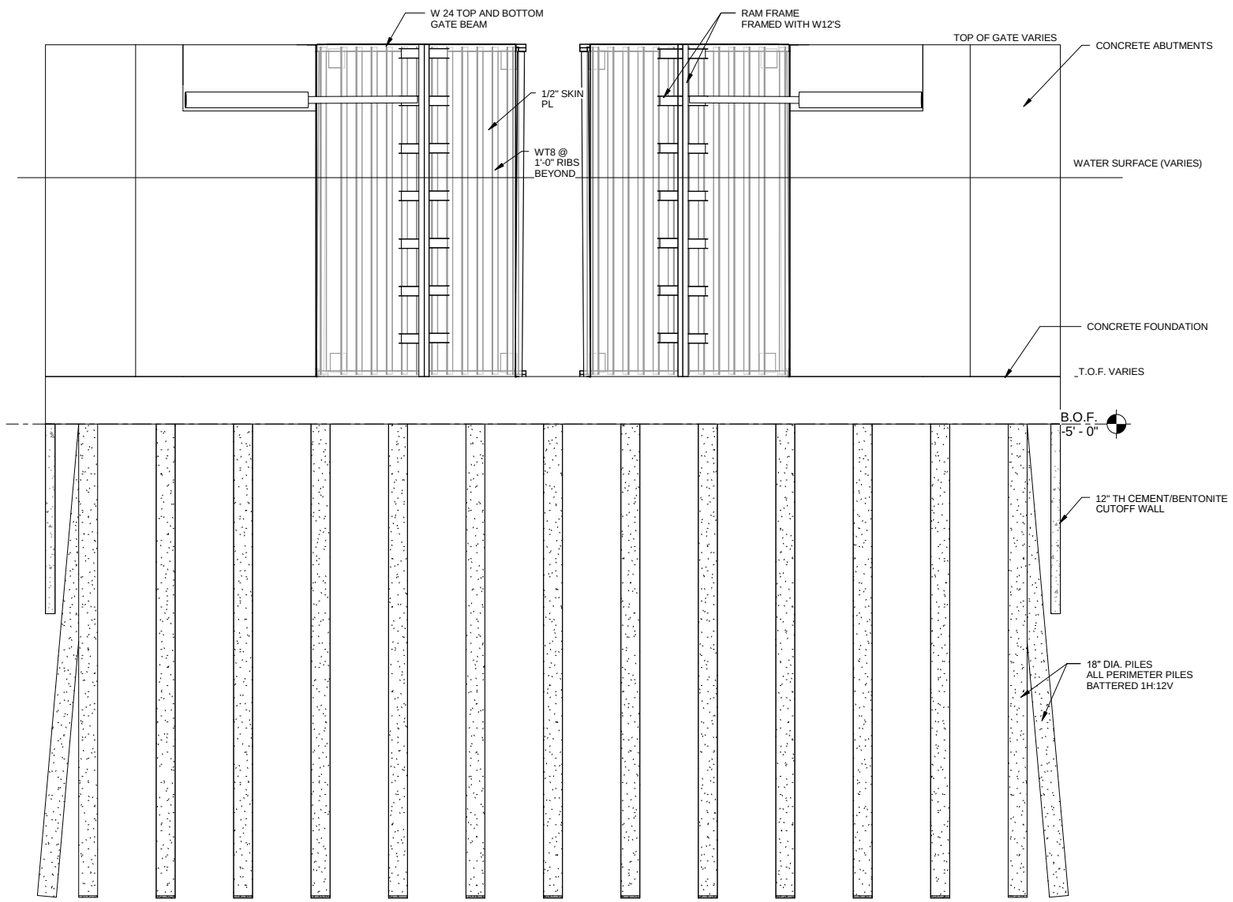

1 CHANNEL VIEW

1/8" = 1'-0"

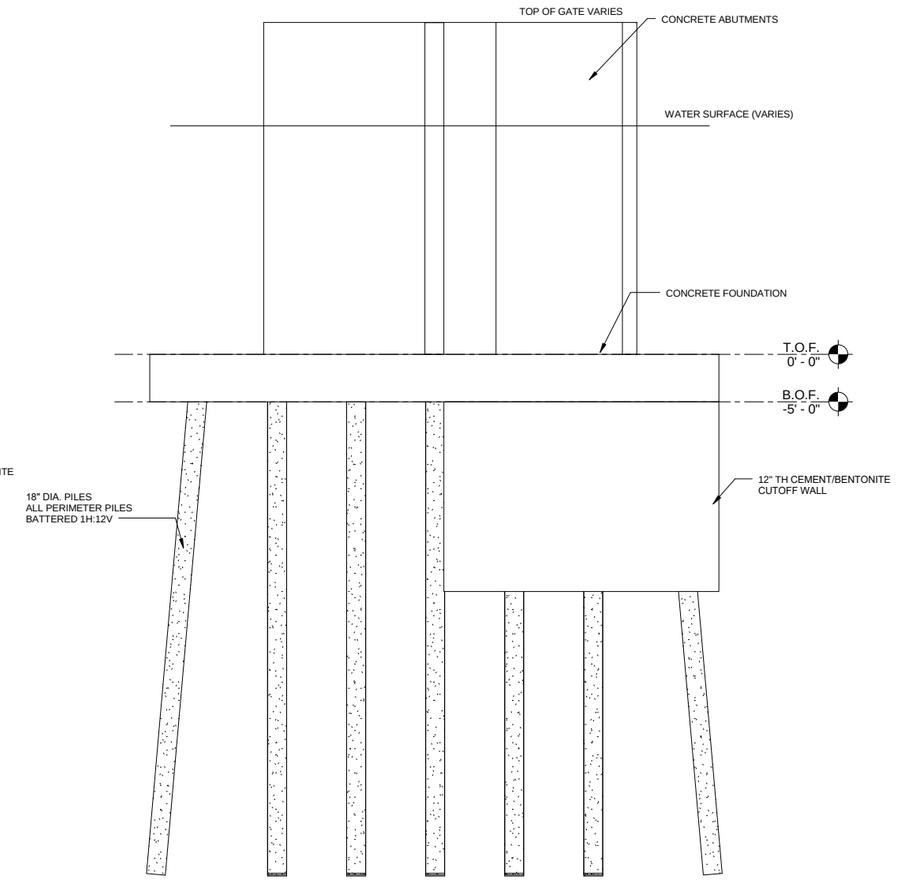

2 SIDE VIEW

1/8" = 1'-0"

US Army Corps of Engineers ®
Norfolk District

MARK	DESCRIPTION	DATE	APPR.

ISSUE DATE: DD-MMM-YYYY
PROJECT NO. P600000
CONTRACT NO. Contract No.
NAO FILE NUMBER:

DESIGN BY: Designer
DRAWN BY: Author
SBMT BY: Approver
CKD BY: Checker
PLOT DATE:
PLOT SCALE: ASIS+OVR
SIZE: 22" X 34"
FILE NAME:

US ARMY CORPS OF ENGINEERS
NORFOLK DISTRICT
Norfolk, VA

10% DESIGN SUBMITTAL

COLLIER COUNTY COASTAL STORM RISK MANAGEMENT (CSRM) STUDY

MITER TIDE GATE ELEVATIONS

SHEET IDENTIFICATION
S-501
SHEET OF 0

S-501-

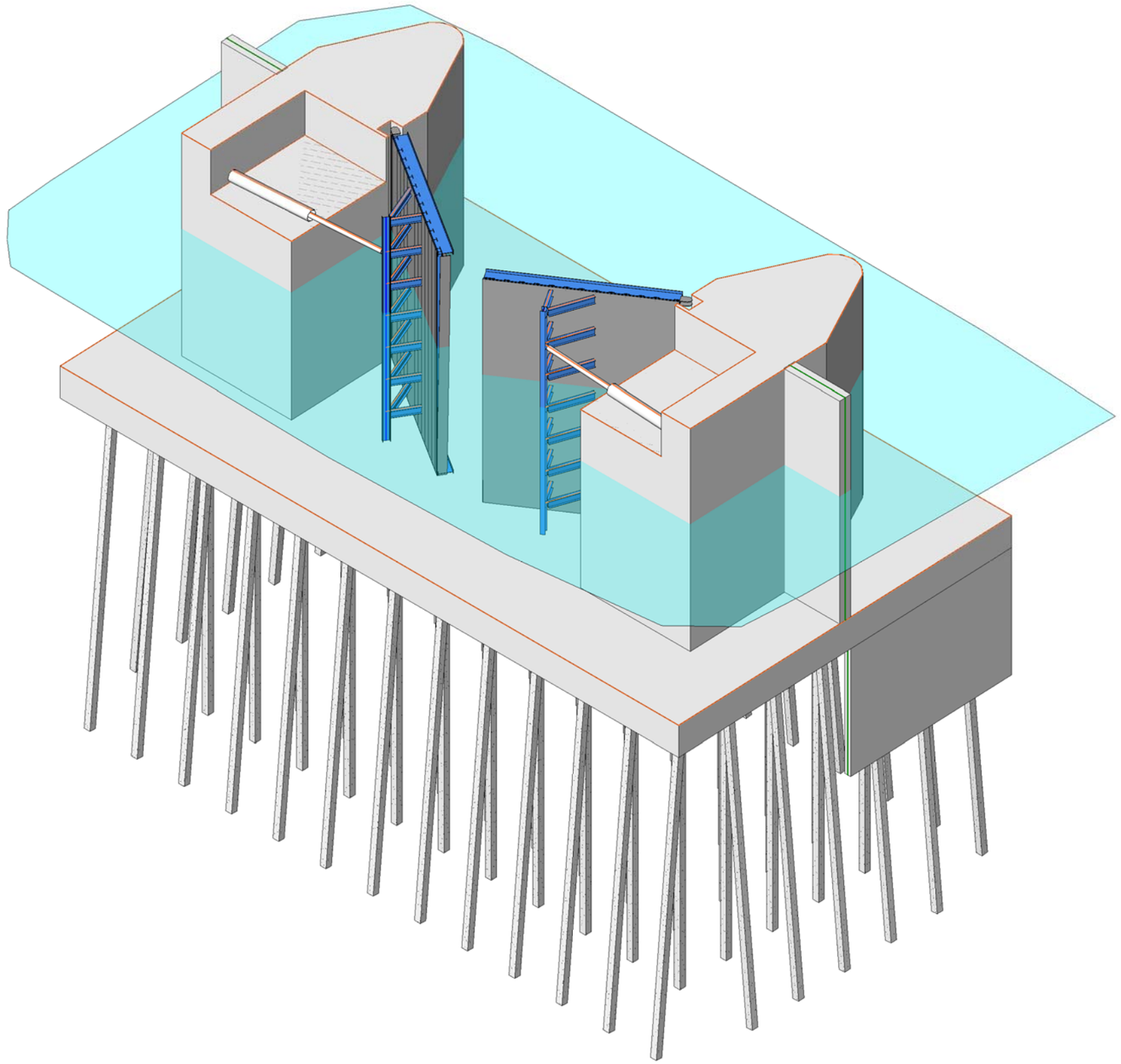

1 BIRD'S EYE VIEW MITER TIDE GATE

US Army Corps of Engineers ®
Norfolk District

MARK	DESCRIPTION	DATE	APPD

ISSUE DATE: DD-MMM-YYYY
PROJECT NO. PN00000
CONTRACT NO. Contract No.
NAD FILE NUMBER:

DESIGN BY: Designer
DRAWN BY: Author
CKD BY: Checker
SBMT BY: Approver
PLOT DATE:
PLOT SCALE: AS SHOWN
SIZE: 22" X 34"
FILE NAME:

US ARMY CORPS OF ENGINEERS
NORFOLK DISTRICT
Norfolk, VA

10% DESIGN SUBMITTAL

COLLIER COUNTY COASTAL STORM RISK MANAGEMENT (CSRM) STUDY

BIRD'S EYE

SHEET IDENTIFICATION
S-601
SHEET OF 0

S-601-

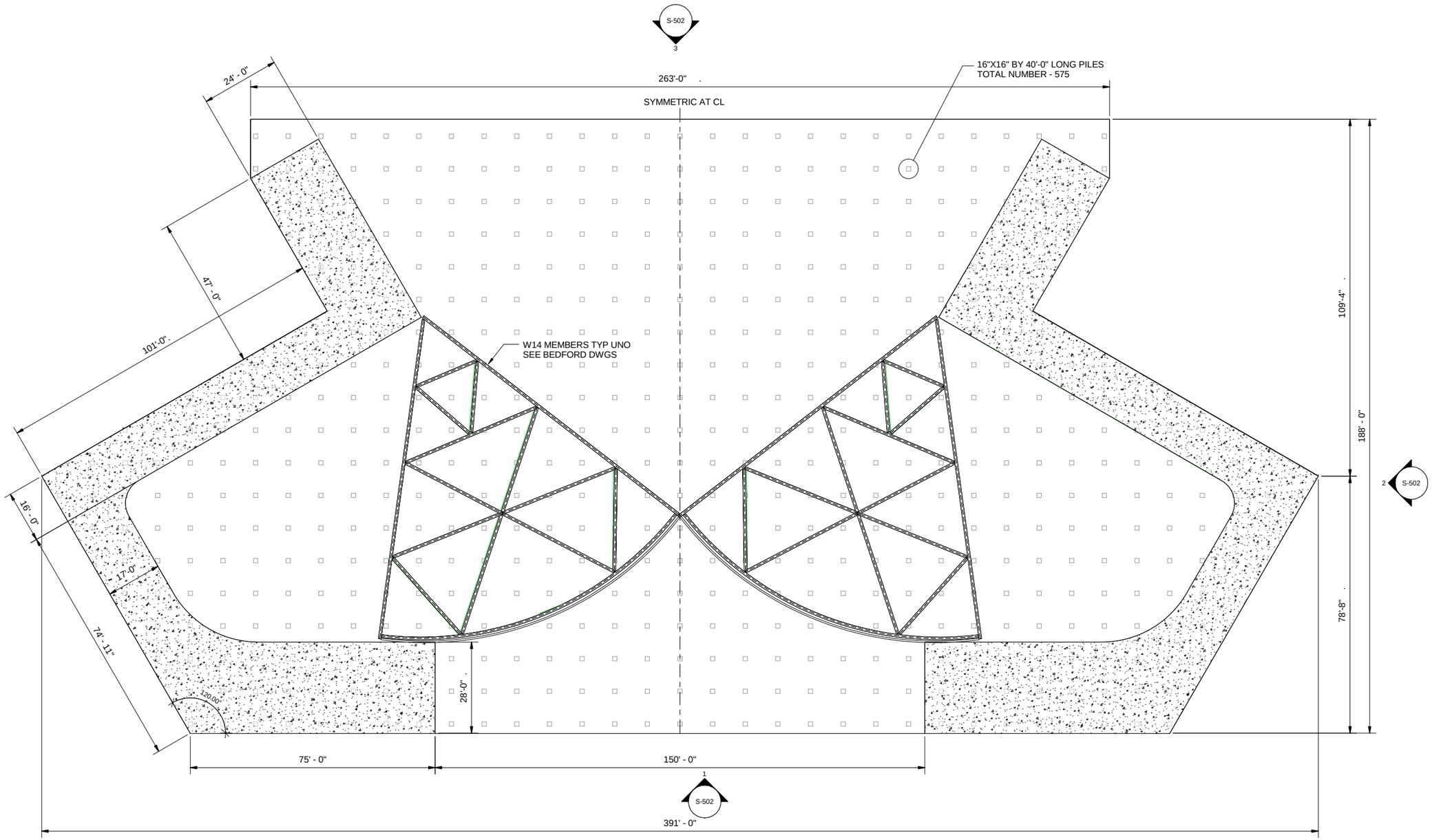

US Army Corps of Engineers ®

MARK	DESCRIPTION	DATE

DESIGNED BY: Designer
DRAWN BY: Drafter
CHECKED BY: Checker
SUBMITTED BY:
SIZE: ANSI D

ISSUE DATE: SUBMITTAL
PROJECT NO.:
CONTRACT NO.: -
FILE NUMBER:
DATE & TIME STAMP:

US ARMY CORPS OF ENGINEERS
NORFOLK DISTRICT
NORFOLK, VA

10% DESIGN SUBMITTAL

COLLIER COUNTY COASTAL STORM RISK MANAGEMENT (CSRM) STUDY

SECTOR GATE FOUNDATION PLAN

SHEET ID

S-102

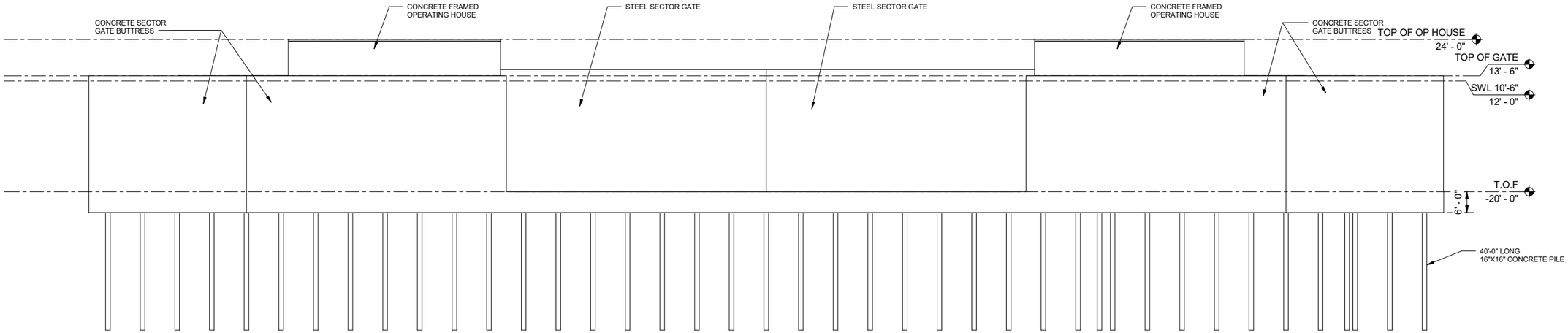

SOUTH FRAMING ELEVATION

SCALE: 1/16" = 1'-0"

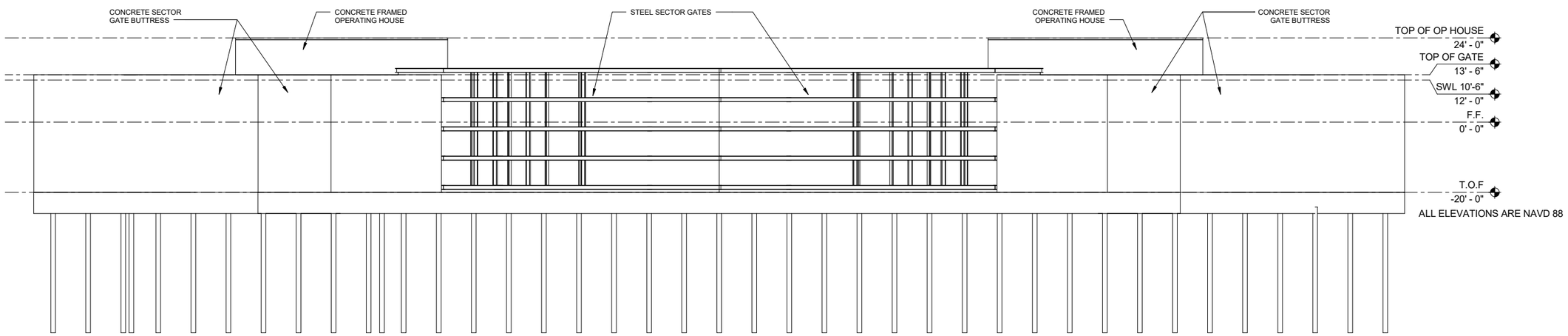

NORTH FRAMING ELEVATION

SCALE: 1/16" = 1'-0"

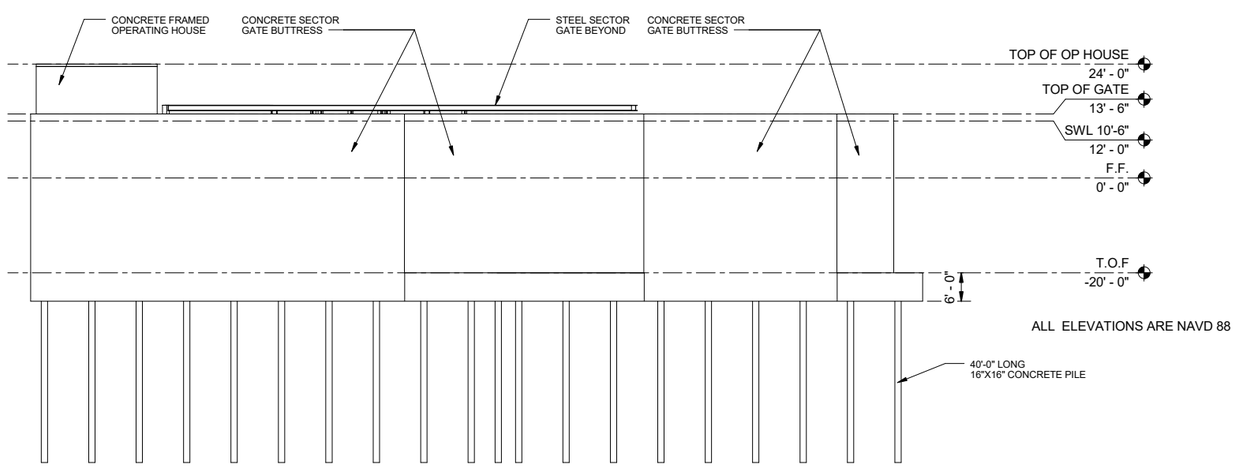

EAST FRAMING ELEVATION

SCALE: 1/16" = 1'-0"

US Army Corps of Engineers ®

MARK	DESCRIPTION	DATE

ISSUE DATE:
SUBMITTAL:
PROJECT NO.: -
CONTRACT NO.: -
FILE NUMBER:
DATE & TIME STAMP:

DESIGNED BY: Designer
DRAWN BY: Author
CHECKED BY: Checker
SUBMITTED BY:
SIZE: ANSI D

US ARMY CORPS OF ENGINEERS
NORFOLK DISTRICT
NORFOLK, VA

10% DESIGN SUBMITTAL

COLLIER COUNTY COASTAL STORM RISK MANAGEMENT (CSRM) STUDY

TYPICAL STRUCTURAL ELEVATIONS

SHEET ID

S-502

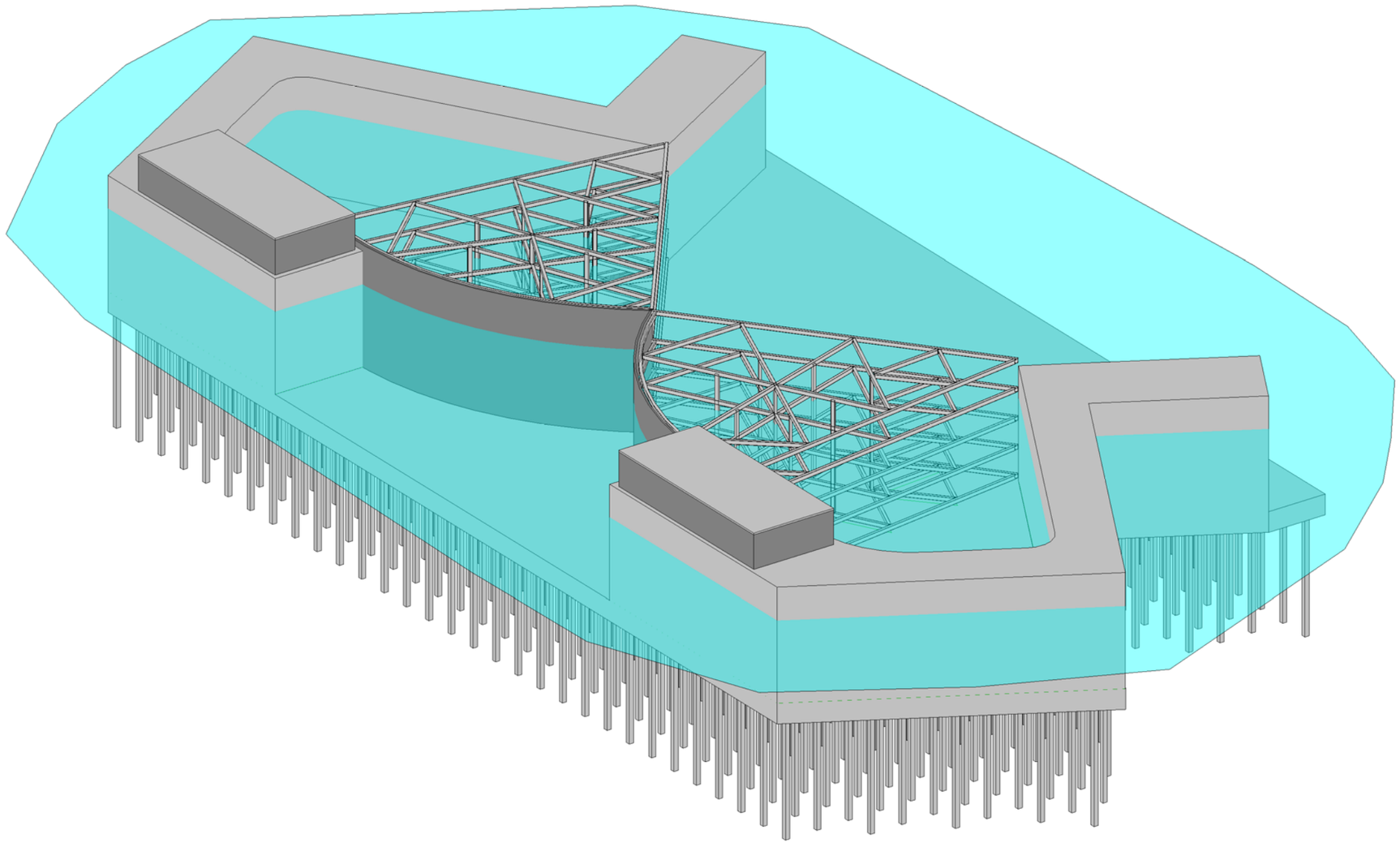

BIRD'S EYE VIEW

SCALE:

US Army Corps of Engineers ®

MARK	DESCRIPTION	DATE

DESIGNED BY: Designer
DRAWN BY: Author
CHECKED BY: Checker
SUBMITTED BY:
SIZE: ANSI D

ISSUE DATE:
SUBMITTAL
PROJECT NO.: -
CONTRACT NO.: -
FILE NUMBER:
DATE & TIME STAMP:

US ARMY CORPS OF ENGINEERS
NORFOLK DISTRICT
NORFOLK, VA

10% DESIGN SUBMITTAL

COLLIER COUNTY COASTAL STORM RISK MANAGEMENT (CSRM) STUDY

BIRD'S EYE VIEW

SHEET ID

S-602

TYPICAL SLUICE GATE FOR CULVERT

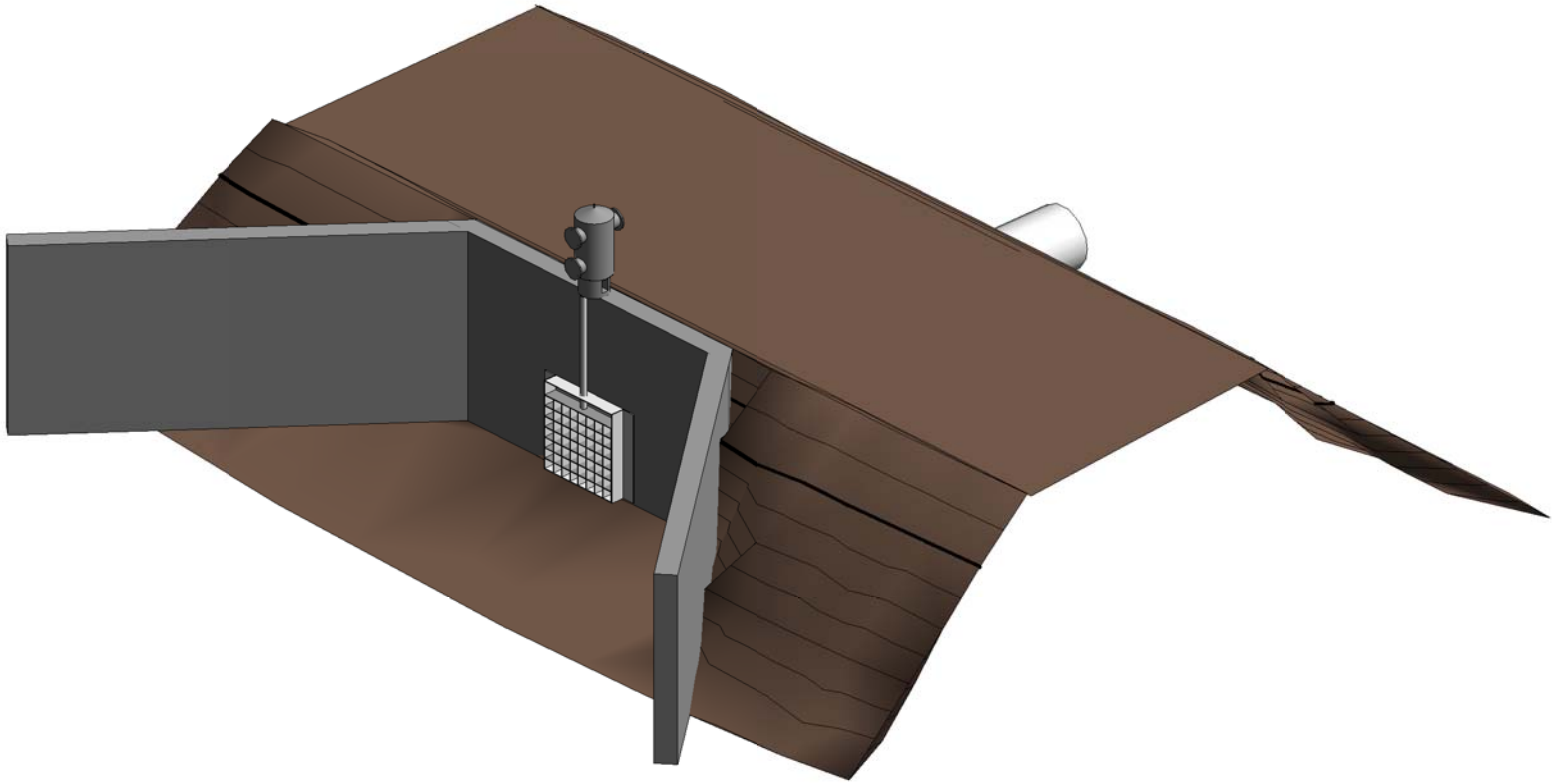

TYPICAL SLUICE GATE FOR CULVERT

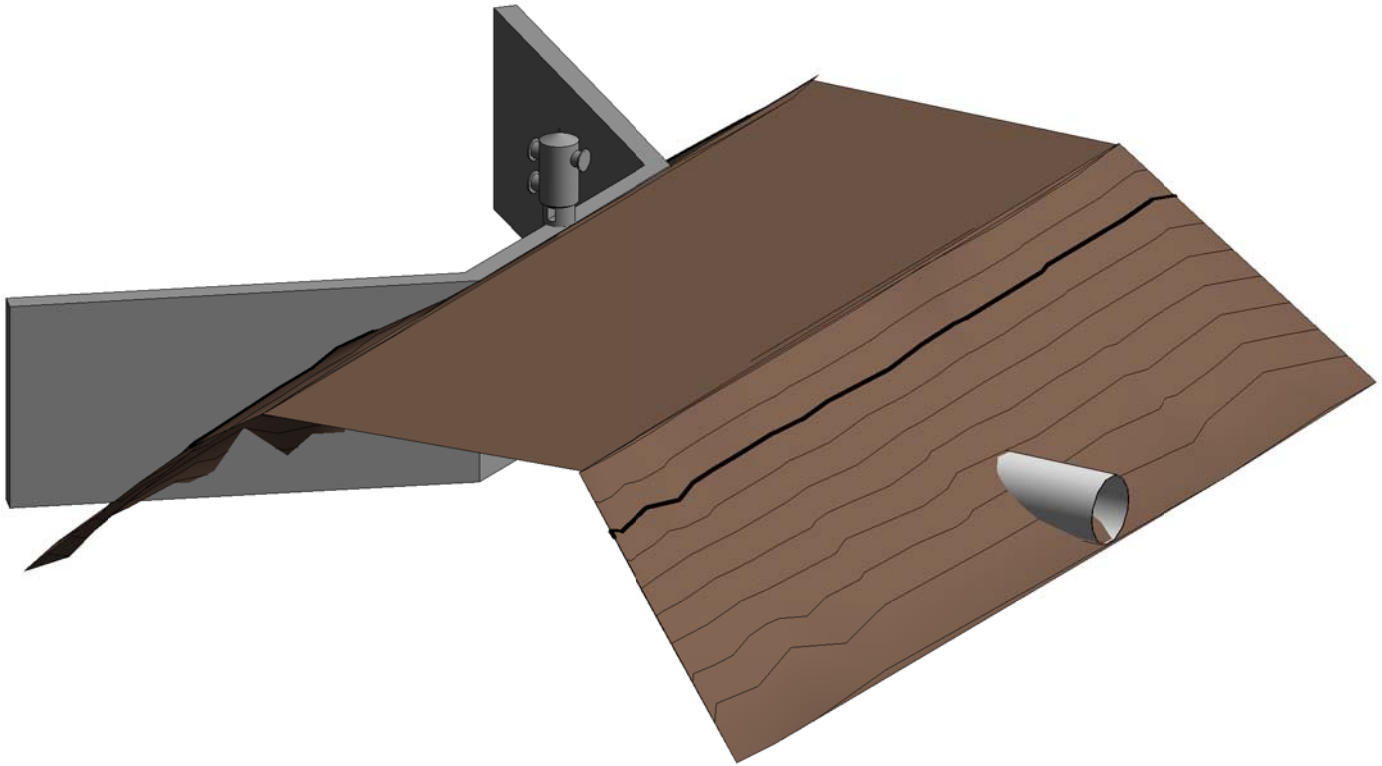

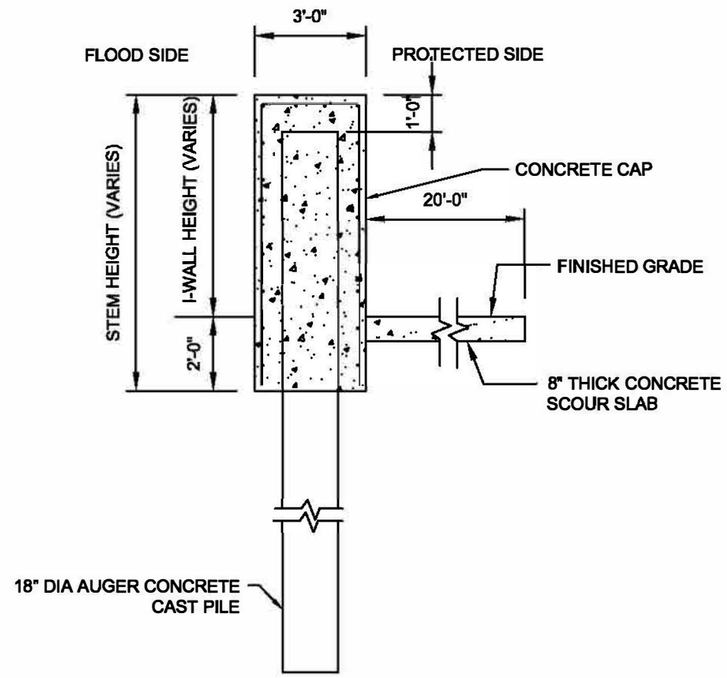

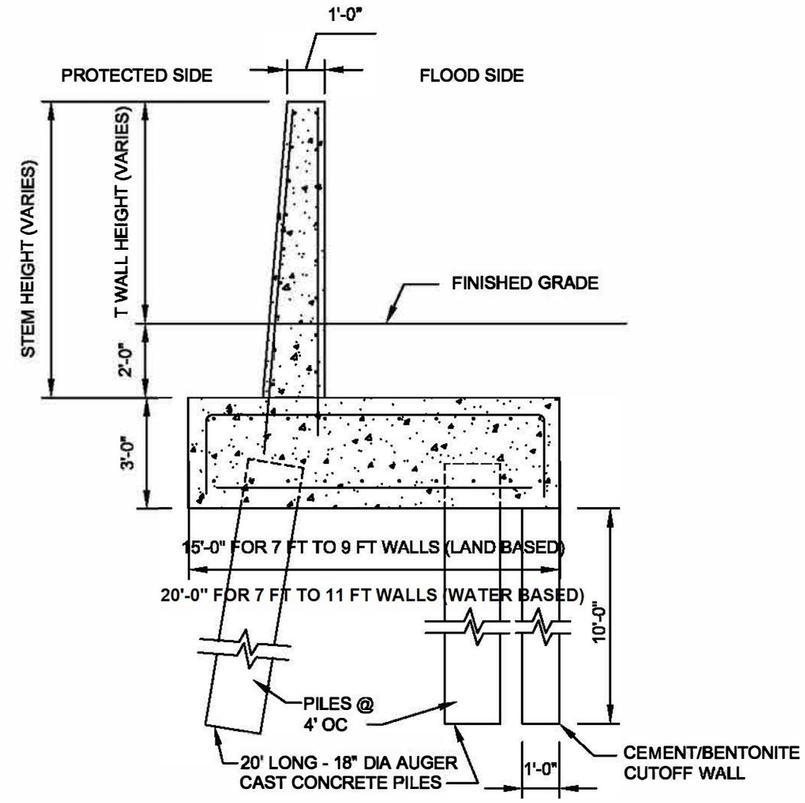

I - WALL QUANTITIES (ESTIMATED)			
I-WALL HEIGHT	STEM HEIGHT	CONCRETE VOL [CY/FT]	LENGTH OF PILE [FT]
3 FT	5 FT	0.6	20
4 FT	6 FT	0.7	20
5 FT	7 FT	0.8	20
6 FT	8 FT	0.9	20

T - WALL QUANTITIES (ESTIMATED) (LAND BASED)				
T-WALL HEIGHT	STEM HEIGHT	CONCRETE VOL STEM CY/FT	CONCRETE VOL BASE CY/FT	VOL OF CUTOFF WALL CY/FT
7 FT	9 FT	0.50	1.67	0.37
8 FT	10 FT	0.56	1.67	0.37
9 FT	11 FT	0.61	1.67	0.37

T - WALL QUANTITIES (ESTIMATED) (WATER BASED)				
T-WALL HEIGHT	STEM HEIGHT	CONCRETE VOL STEM CY/FT	CONCRETE VOL BASE CY/FT	VOL OF CUTOFF WALL CY/FT
7 FT	9 FT	0.50	2.22	0.37
8 FT	10 FT	0.56	2.22	0.37
9 FT	11 FT	0.61	2.22	0.37
10 FT	12 FT	0.67	2.22	0.37
11 FT	13 FT	0.72	2.22	0.37

NOTES:

1. ALL CONCRETE SHALL HAVE A 28 DAY STRENGTH OF 4000 PSI.
2. ALL REINFORCEMENT SHALL HAVE AN Fy = 60 KSI
3. CEMENT/ BENTONITE CUTOFF WALL SHALL BE BY EXCAVATION AND PUMPING.
4. "I-WALL HEIGHT" AND "T-WALL HEIGHT" REFER TO THE EXPOSED HEIGHT OF THE WALL ABOVE GROUND

US Army Corps of Engineers
Norfolk District

DESIGNED XXX
DRAWN XXX
CHECKED XXX
SUBMITTED XXX
DATE XX-XXX-13
SCALE AS SHOWN
DESCRIPTION XXXXXX
FILE XXXXXX
CONTRACT/SOLICITATION NO. YR-X-XXXX
US ARMY CORPS OF ENGINEERS
NORFOLK DISTRICT
NORFOLK, VIRGINIA
10% DESIGN SUBMITTAL

COLLIER COUNTY COASTAL STORM RISK MANAGEMENT (CSRM) STUDY

PRELIMINARY I - WALL AND T - WALL STRUCTUTRAL SECTIONS

SHEET REFERENCE NUMBER
S-503A
SHEET XXX OF XXX

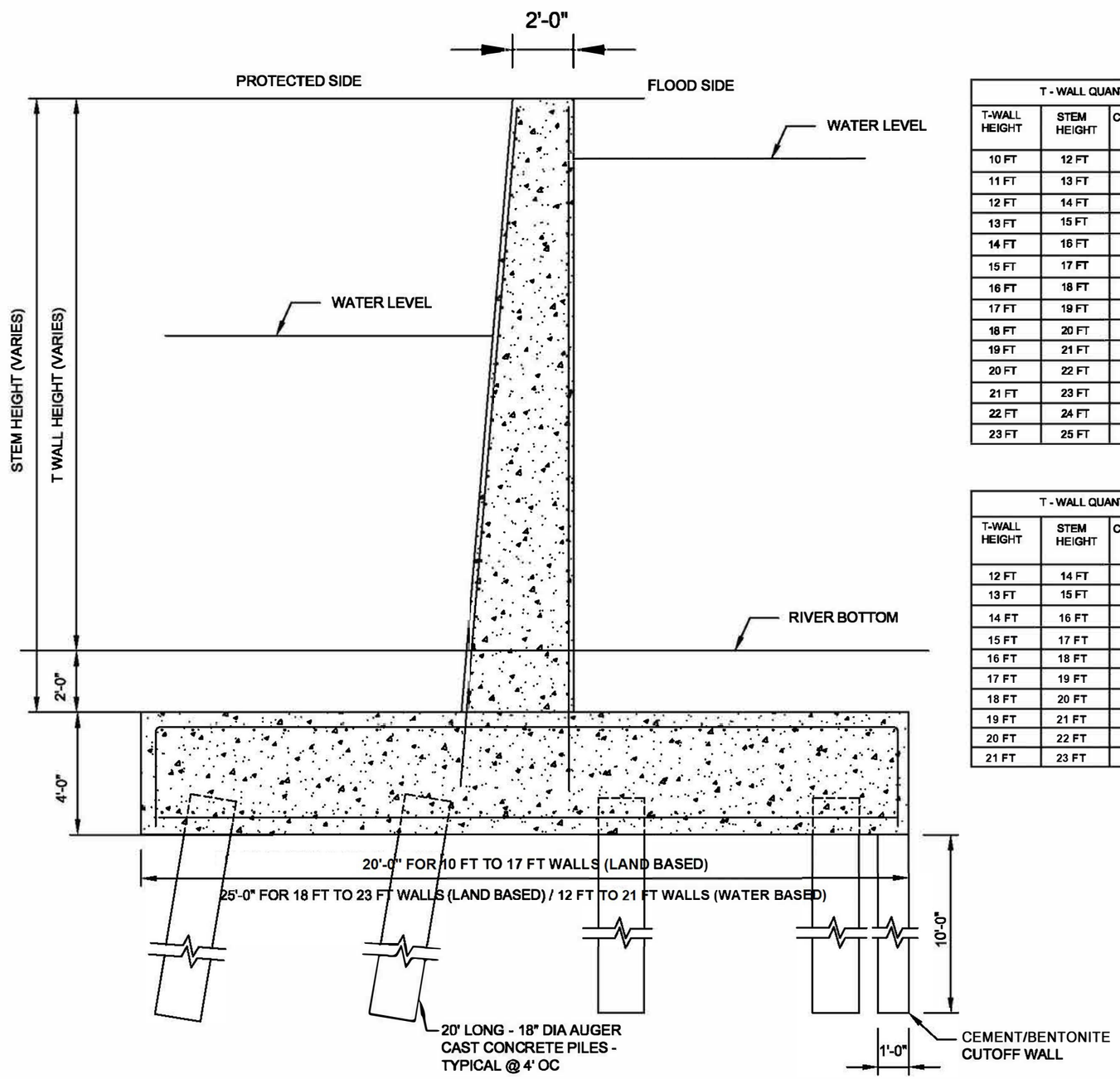

T - WALL QUANTITIES (ESTIMATED) (LAND BASED)				
T-WALL HEIGHT	STEM HEIGHT	CONCRETE VOL STEM CY/FT	CONCRETE VOL BASE CY/FT	VOL OF CUTOFF WALL CY/ FT
10 FT	12 FT	1.33	2.96	0.37
11 FT	13 FT	1.44	2.96	0.37
12 FT	14 FT	1.56	2.96	0.37
13 FT	15 FT	1.67	2.96	0.37
14 FT	16 FT	1.78	2.96	0.37
15 FT	17 FT	1.89	2.96	0.37
16 FT	18 FT	2.00	2.96	0.37
17 FT	19 FT	2.11	2.96	0.37
18 FT	20 FT	2.22	3.70	0.37
19 FT	21 FT	2.33	3.70	0.37
20 FT	22 FT	2.44	3.70	0.37
21 FT	23 FT	2.56	3.70	0.37
22 FT	24 FT	2.67	3.70	0.37
23 FT	25 FT	2.78	3.70	0.37

T - WALL QUANTITIES (ESTIMATED) (WATER BASED)				
T-WALL HEIGHT	STEM HEIGHT	CONCRETE VOL STEM CY/FT	CONCRETE VOL BASE CY/FT	VOL OF CUTOFF WALL CY/ FT
12 FT	14 FT	1.56	3.70	0.37
13 FT	15 FT	1.67	3.70	0.37
14 FT	16 FT	1.78	3.70	0.37
15 FT	17 FT	1.89	3.70	0.37
16 FT	18 FT	2.00	3.70	0.37
17 FT	19 FT	2.11	3.70	0.37
18 FT	20 FT	2.22	3.70	0.37
19 FT	21 FT	2.33	3.70	0.37
20 FT	22 FT	2.44	3.70	0.37
21 FT	23 FT	2.56	3.70	0.37

NOTES:

1 - ALL CONCRETE SHALL HAVE A 28 DAY STRENGTH OF 4000 PSI.

2 - ALL REINFORCEMENT SHALL HAVE AN Fy = 60 KSI

3 - CEMENT/BENTONITE CUTOFF WALL SHALL BE BY EXCAVATION AND PUMPING.

4 - "I-WALL HEIGHT" AND "T-WALL HEIGHT" REFER TO THE EXPOSED HEIGHT OF THE WALL ABOVE GROUND

US Army Corps of Engineers
Norfolk District

US ARMY CORPS OF ENGINEERS
NORFOLK DISTRICT
NORFOLK, VIRGINIA

10% DESIGN SUBMITTAL

COLLIER COUNTY COASTAL STORM RISK MANAGEMENT (CSRM) STUDY

PRELIMINARY I - WALL AND T - WALL STRUCTUTRAL SECTIONS

SHEET REFERENCE NUMBER
S-503B
SHEET XXX OF XXX

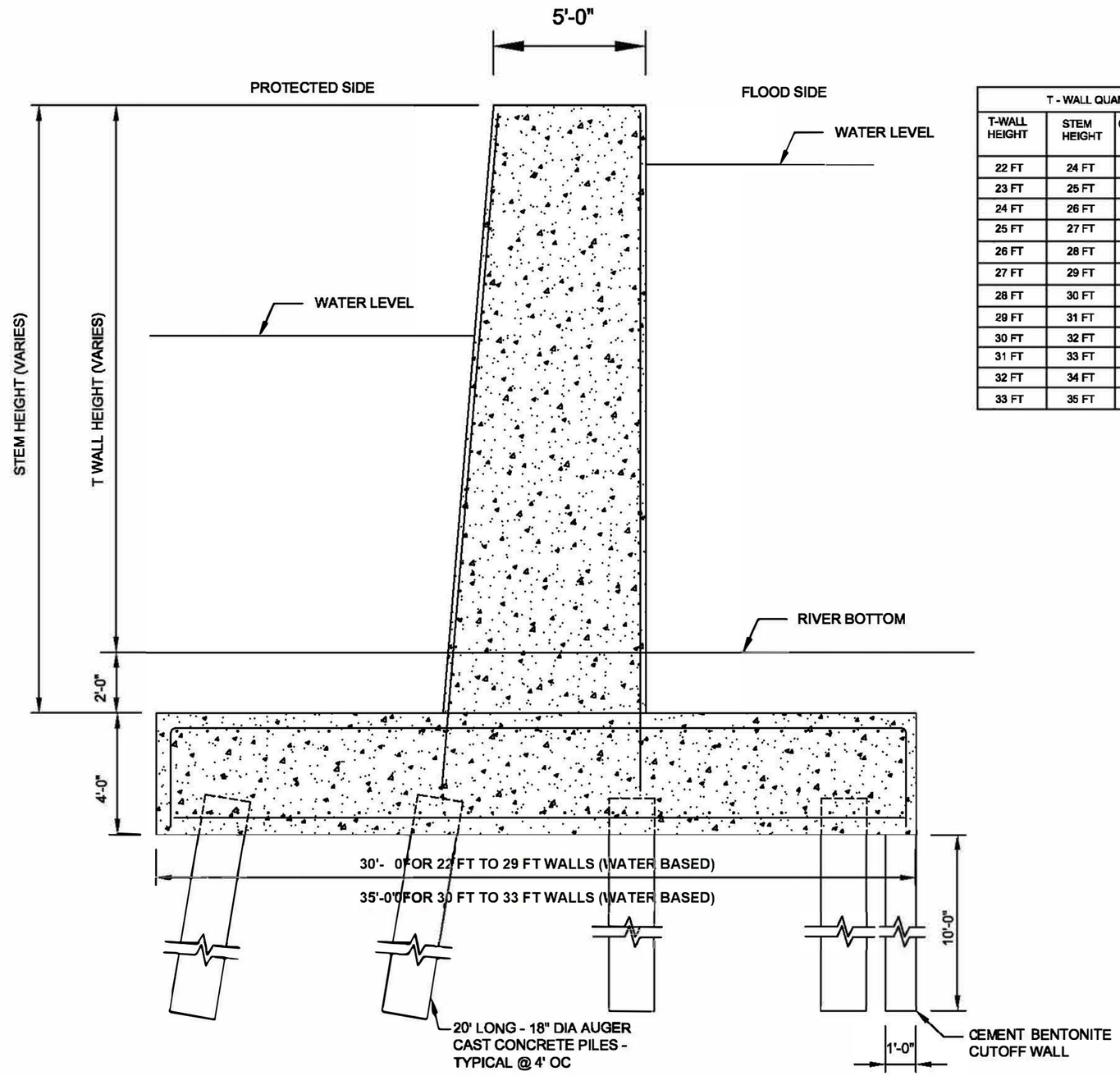

T - WALL QUANTITIES (ESTIMATED) (WATER BASED)				
T-WALL HEIGHT	STEM HEIGHT	CONCRETE VOL STEM CY/FT	CONCRETE VOL BASE CY/FT	VOL OF CUTOFF WALL CY/FT
22 FT	24 FT	5.78	4.44	0.37
23 FT	25 FT	6.02	4.44	0.37
24 FT	26 FT	6.26	4.44	0.37
25 FT	27 FT	6.50	4.44	0.37
26 FT	28 FT	6.74	4.44	0.37
27 FT	29 FT	6.98	4.44	0.37
28 FT	30 FT	7.22	4.44	0.37
29 FT	31 FT	7.46	4.44	0.37
30 FT	32 FT	7.70	5.19	0.37
31 FT	33 FT	7.94	5.19	0.37
32 FT	34 FT	8.19	5.19	0.37
33 FT	35 FT	8.43	5.19	0.37

NOTES:

1. ALL CONCRETE SHALL HAVE A 28 DAY STRENGTH OF 4000 PSI.
2. ALL REINFORCEMENT SHALL HAVE AN Fy = 60 KSI
3. CEMENT/ BENTONITE CUTOFF WALL SHALL BE BY EXCAVATION AND PUMPING.
4. "I-WALL HEIGHT" AND "T-WALL HEIGHT" REFER TO THE EXPOSED HEIGHT OF THE WALL ABOVE GROUND

US Army Corps of Engineers
Norfolk District

US ARMY CORPS OF ENGINEERS
NORFOLK DISTRICT
NORFOLK, VIRGINIA

10% DESIGN SUBMITTAL

COLLIER COUNTY COASTAL STORM RISK MANAGEMENT (CSRM) STUDY

PRELIMINARY I - WALL AND T - WALL STRUCTUTRAL SECTIONS

SHEET REFERENCE NUMBER
S-503C
SHEET XXX OF XXX

CHAPTER 4: APPENDIX DRAWINGS

SECTOR GATE
NEW BEDFORD - FAIR HAVEN, CONNECTICUT

THIS GATE HAS DIMENSIONS OF 152' IN WIDTH
AND 53' IN HEIGHT. THE COLLIER COUNTY CSRM GATE
SHALL BE 150' IN WIDTH AND 35' IN HEIGHT.
ADJUST COSTS ACCORDINGLY.

STANDARD STREET CLOSURE
NORFOLK FLOODWALL, NORFOLK, VA

DRAWINGS DEPICT STANDARD FEATURES OF
STREET CLOSURE GATES. SIZES REQUIRED
FOR COLLIER COUNTY CSRM VARY SEE TABLE BELOW.
ADJUST COST ACCORDINGLY.

BARGE GATE
(CPRA) BAYOU TIGRE FLOOD CONTROL PROJECT, NEW ORLEANS, LA

THE CONCEPT DRAWING DIMENSIONS WILL DIFFER
FROM THE COLLIER COUNTY CSRM SURGE BARRIER.
THESE DRAWINGS WERE USED AS REFERENCE ONLY.

US Army Corps of Engineers ®
Norfolk District

MARK	DESCRIPTION	DATE	APPD

ISSUE DATE: DD-MMM-YYY
DESIGN BY: Designer
DRAWN BY: Author
CKD BY: Checker
PROJECT NO. PN00000
PLOT DATE: 4/20/2017 9:40:49 AM
CONTRACT NO. Contract No.
SBMT BY: Approver
NAO FILE NUMBER:
PLOT SCALE: AS SHOWN
SIZE: 22" X 34"
FILE NAME:

US ARMY CORPS OF ENGINEERS
NORFOLK DISTRICT
Norfolk, VA

10% DESIGN SUBMITTAL

COLLIER COUNTY COASTAL STORM RISK MANAGEMENT (CSRM) STUDY

APPENDICES

SHEET IDENTIFICATION
S-REF1
SHEET XXX OF XXX

S-REF1-

NEW BEDFORD - FAIR HAVEN SECTOR GATE

US Army Corps of Engineers
Norfolk District

SYM	DESCRIPTION	DATE	APPD

DESIGNED XXX
CHKD. XXX
CHECKED XXX
SUBMITTED XXX
DATE XX-XXX-13
SCALE AS SHOWN
PROJECT NO XXXXXX
SUPPORTING FILE NO XXX
PFND XXXXXX
CONTRACT/SOLICITATION NO YR-X-XXXX
Last saved on:
File name:
Plot scale: 1:1

NORFOLK DISTRICT
CORPS OF ENGINEERS
NORFOLK, VIRGINIA

10% DESIGN SUBMITTAL

COLLIER COUNTY COASTAL STORM RISK MANAGEMENT (CSRM) STUDY

NEW BEDFORD-FAIR HAVEN SECTOR GATE

SHEET REFERENCE NUMBER
S-REF2
SHEET XXX OF XXX

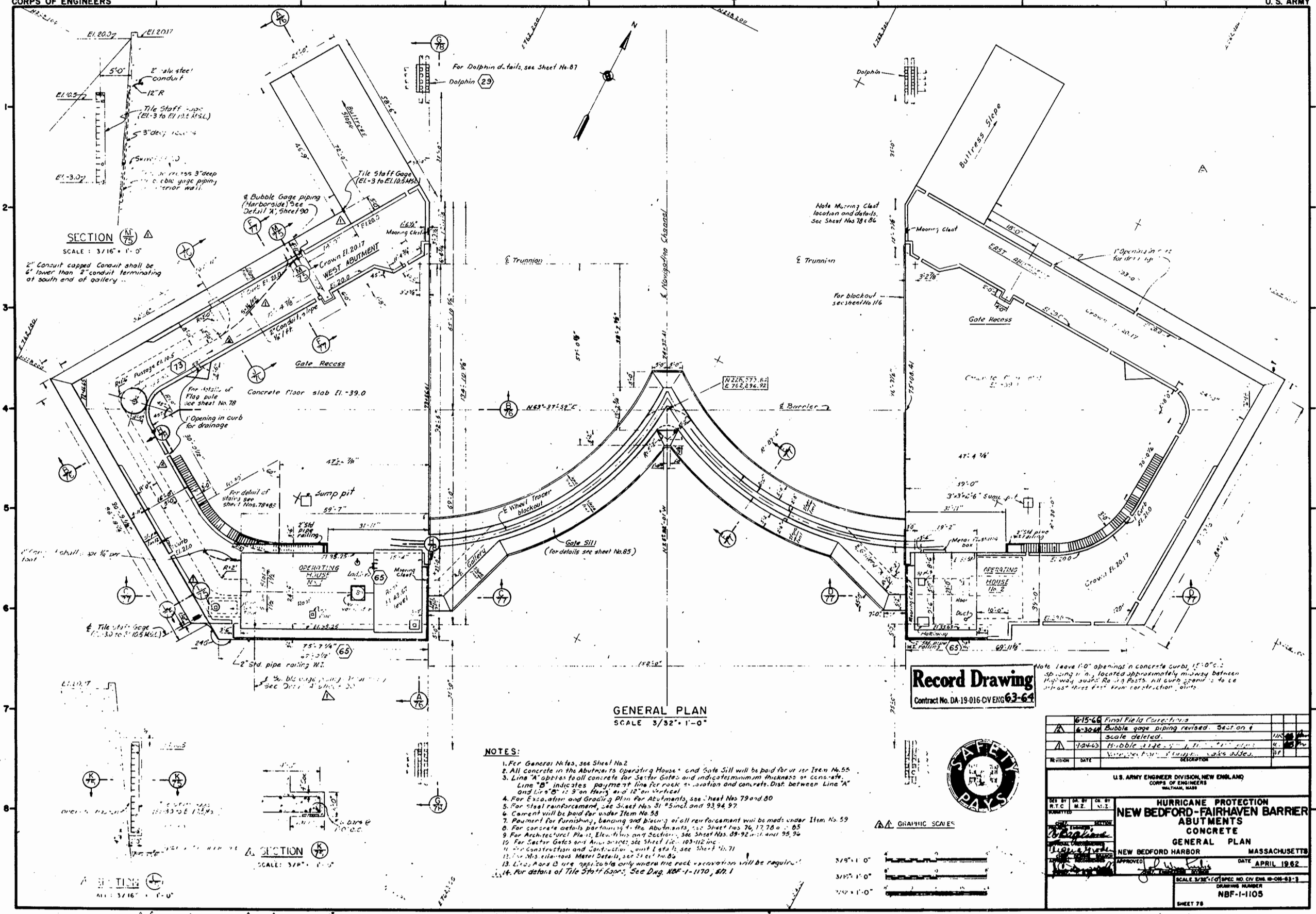

NOTES:

1. For General Notes, see Sheet No. 2
2. All concrete in the Abutments, Operating House, and Gate Sill will be paid for under Item No. 55
3. Line "A" applies to all concrete for Sector Gates and indicates minimum thickness of concrete. Line "B" indicates payment line for rock excavation and concrete. Dist. between Line "A" and Line "B" is 9" on Horiz. and 12" on Vertical
4. For Excavation and Grading Plan for Abutments, see Sheet Nos. 79 and 80
5. For Steel reinforcement, see Sheet Nos. 91 #5 incl. and 93, 94, 97
6. Cement will be paid for under Item No. 58
7. Payment for furnishing, bending and placing of all reinforcement will be made under Item No. 59
8. For concrete details pertaining to the Abutments, see Sheet Nos. 76, 77, 78 & 85
9. For Architectural Plans, Elevations and Sections, see Sheet Nos. 89-92 incl. and 95, 96
10. For Sector Gates and Anchorages, see Sheet Nos. 103-112 inc.
11. For Construction and Contraction Joint Details, see Sheet No. 71
12. For Miscellaneous Metal Details, see Sheet No. 86
13. Lines A and B are applicable only where the rock excavation will be required
14. For details of Tile Staff Gages, See Dwg. NBF-1-1170, Sh. 1

INFORMATION DWG.

ENGINEERING LIBRARY WORKING COPY
RETURN TO FILE

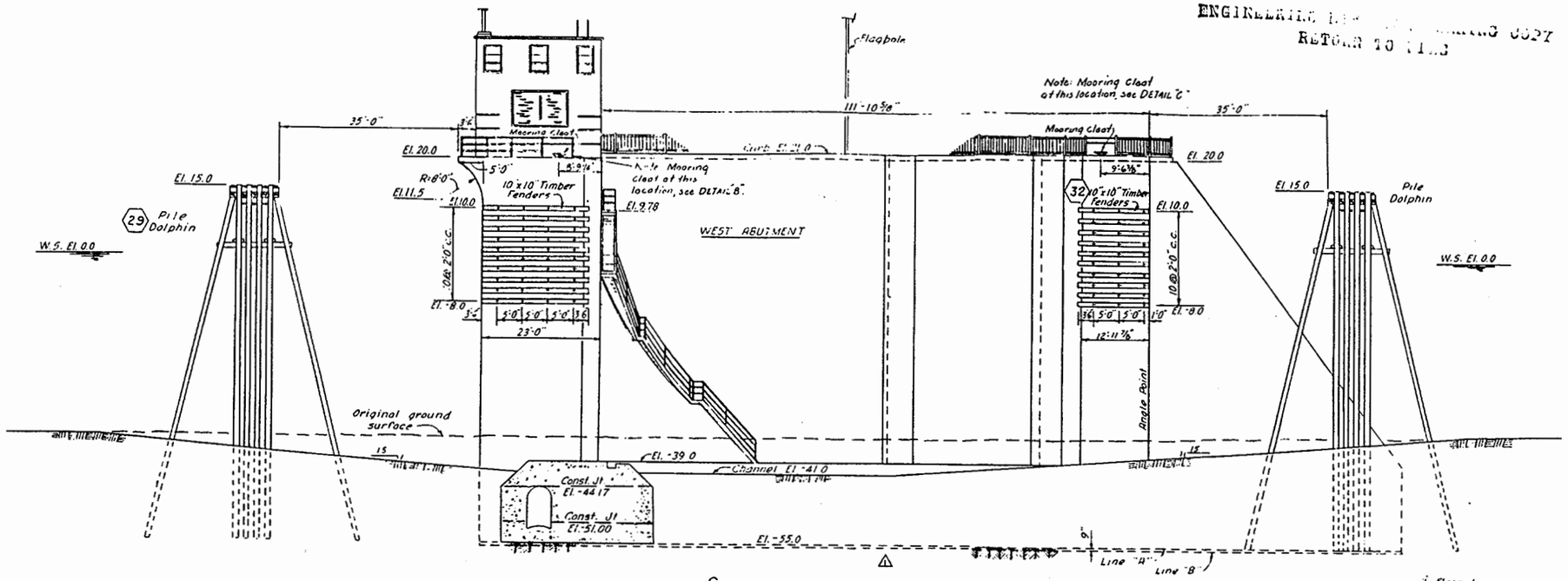

SECTION G/75
SCALE 3/32" = 1'-0"

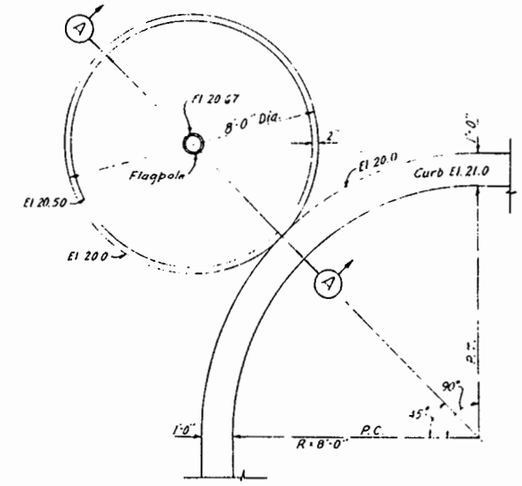

PLAN
SCALE 1/2" = 1'-0"

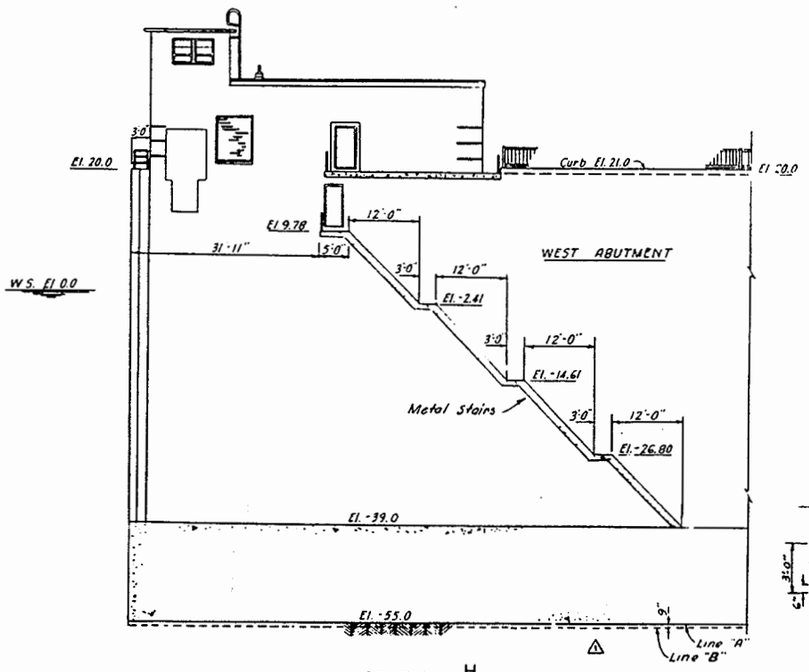

SECTION H/75
SCALE 3/32" = 1'-0"

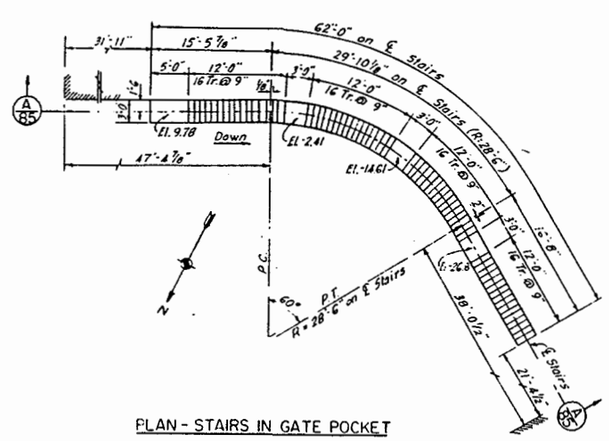

PLAN - STAIRS IN GATE POCKET
WEST ABUTMENT
SCALE 1/8" = 1'-0"

Note:
Stairs in Gate Pocket, East Abutment, similar but opposite hand.

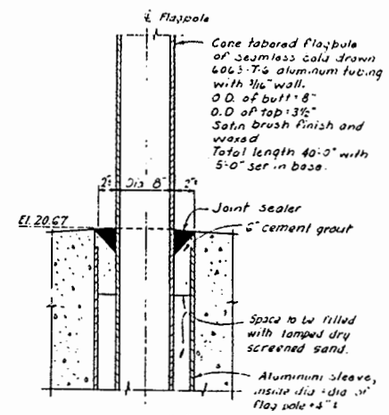

DETAIL "A"
SCALE 1 1/2" = 1'-0"

FLAGPOLE DETAILS
73

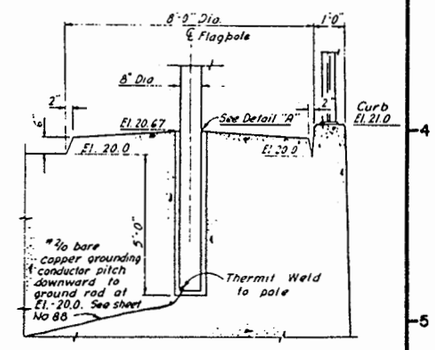

SECTION A-A
SCALE 1/2" = 1'-0"

NOTES:
1. For general notes see Sheet No. 2
2. For notes applying to this Sheet, see Sheet No. 75
3. For fender details see sheet Nos 104 and 116
4. For mooring cleat details see Sheet No. 86

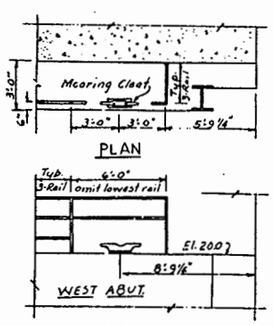

ELEVATION
DETAIL "B"
SCALE 1/4" = 1'-0"

Note: Location of Mooring Cleats EAST ABUT. - Op. hand.

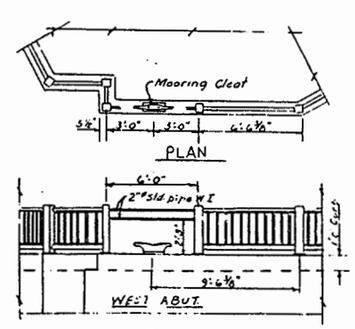

ELEVATION
DETAIL "C"
SCALE 1/4" = 1'-0"

GRAPHIC SCALES
SCALE 3/32" = 1'-0"
SCALE 1/4" = 1'-0"
SCALE 1/2" = 1'-0"

REVISION	DATE	DESCRIPTION	
1	11-20-62	Notes Deleted (Am #1)	

U.S. ARMY ENGINEER DIVISION, NEW ENGLAND
CORPS OF ENGINEERS
WALTHAM, MASS.

DES. BY M.Z. | DR. BY R.P.M. | CK. BY RTC

HURRICANE PROTECTION
NEW BEDFORD-FAIRHAVEN BARRIER
ABUTMENTS
CONCRETE
ELEVATION SECTIONS & DETAILS NO. 3
NEW BEDFORD HARBOR MASSACHUSETTS

DATE APRIL 1962

SCALE AS SHOWN | SPEC NO CIV ENG 19-016-63-3
DRAWING NUMBER
NBF-1-1108
SHEET 78

INFORMATION DWG.

CORPS OF ENGINEERS — U. S. ARMY

BEAM SCHEDULE

WEIGHT OF 14 WFs

TRUSS NO.	(A'C)	(A'R)	(B L)	(B M)	(C E)	(C K)	(C'N)	(D Q)	(D P)	(E F)	(E G)	(E N)	(G N)	(H J)	(H N)	(R J)	(J K)	(J N)	(K N)	(L M)	(Q P)
I	78	78	53	53	61	53	53	53	53	53	87	53	87	87	87	53	87	87	87	53	53
II	184	184	53	53	111	53	68	53	53	61	87	53	87	87	87	61	142	87	87	53	53
III	184	184	53	53	119	78	78	53	53	61	87	53	87	87	87	61	167	87	87	53	53
IV	246	184	53	53	119	167	78	53	53	61	87	78	87	136	87	61	370	219	127	53	53
V	202	219	53	53	119	142	53	53	53	53	87	61	87	87	87	53	314	167	95	53	53

GUSSET & SCHEDULE

JOINT & THICKNESS

TRUSS NO.	(B)	(C)	(D)	(E)	(J)	(K)	(L)	(M)	(N)	(P)	(Q)
I	11/16"	11/16"	5/16"	5/16"	11/16"	5/16"	5/16"	5/16"	5/16"	11/16"	5/16"
II	5/16"	5/16"	5/16"	5/16"	5/16"	11/16"	11/16"	5/16"	5/16"	5/16"	5/16"
III	5/16"	5/16"	5/16"	11/16"	11/16"	5/16"	5/16"	5/16"	5/16"	5/16"	5/16"
IV	5/16"	1 1/8"	5/16"	5/16"	1 1/8"	1 1/8"	5/16"	5/16"	1 1/8"	5/16"	5/16"
V	11/16"	1 1/8"	5/16"	11/16"	1 1/8"	1 1/8"	5/16"	5/16"	1 1/8"	11/16"	5/16"

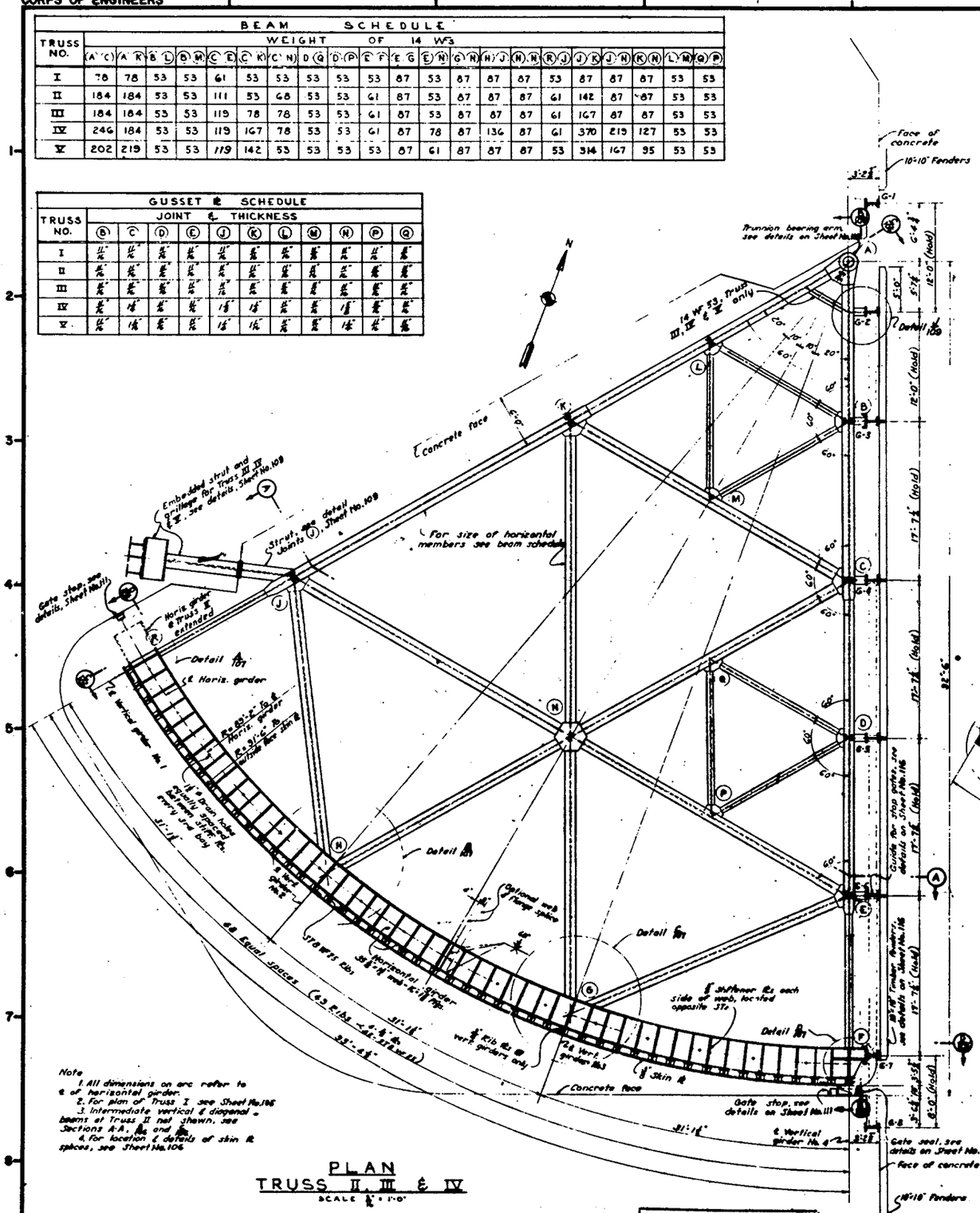

PLAN
TRUSS II, III & IV
SCALE 1/8" = 1'-0"

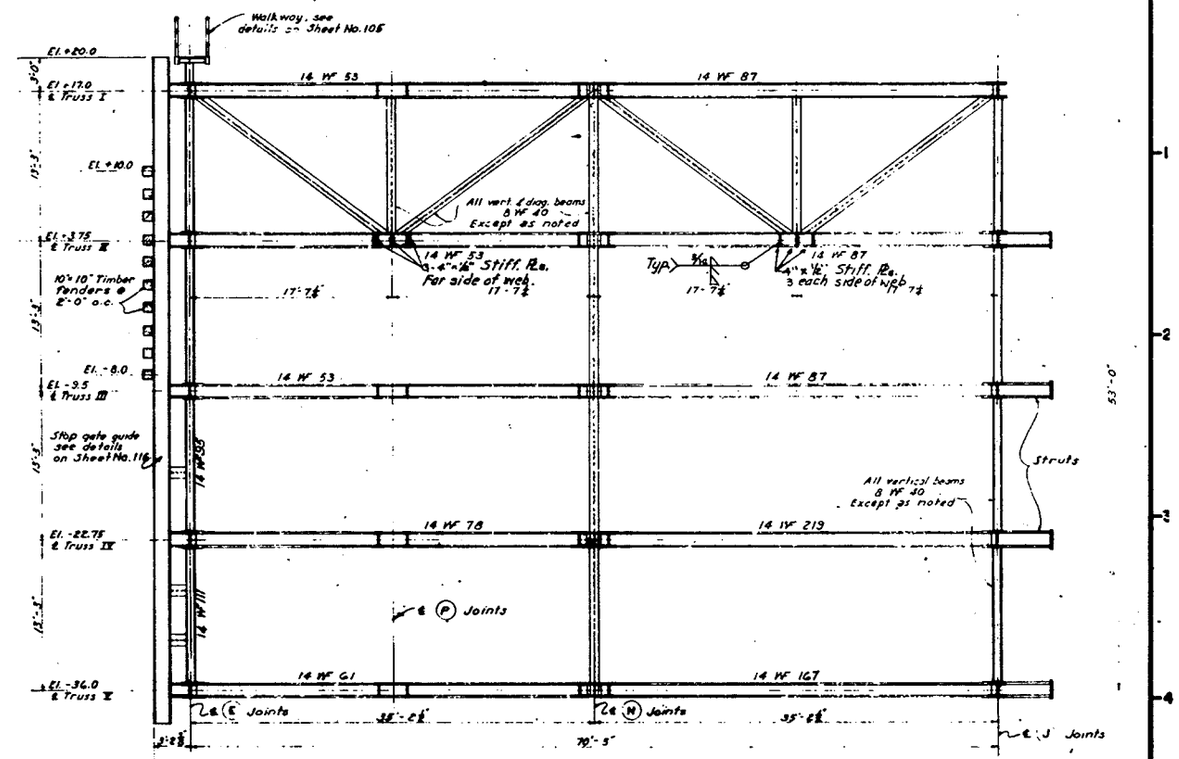

SECTION A-A
SCALE 1/8" = 1'-0"

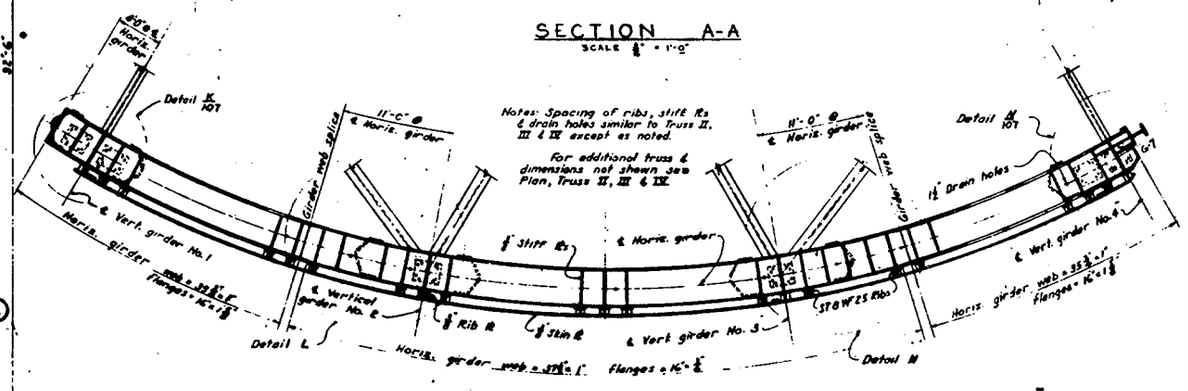

PLAN — TRUSS V
SCALE 1/8" = 1'-0"

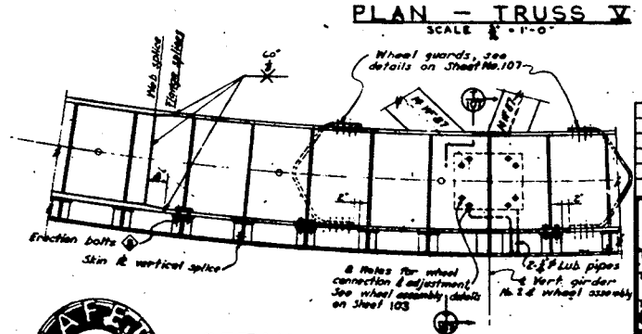

DETAIL L

DETAIL M — SIMILAR BUT OPP. HAND

SCALE 1/2" = 1'-0"

GRAPHIC SCALES

3/4" = 1'-0"

1/2" = 1'-0"

NOTES

1. West gate leaf shown, east leaf opposite hand.
2. Gate leaf shown in stored position to receive stop gates.
3. All material shown on this Sheet shall be paid for under Item 52.

REVISION	DATE	DESCRIPTION	BY
	6-18-66	Final field corrections	

U.S. ARMY ENGINEER DIVISION, NEW ENGLAND
CORPS OF ENGINEERS
WALTHAM, MASS.

HURRICANE PROTECTION
NEW BEDFORD-FAIRHAVEN BARRIER
SECTOR GATES
STRUCTURAL
FRAMING DETAILS NO. I

NEW BEDFORD HARBOR — MASSACHUSETTS

APPROVED — DATE APRIL 1962

SCALE AS SHOWN | SPEC. NO. CTV E208-19-016-63-3

DRAWING NUMBER NBF-1-1134

SHEET 104

Record Drawing
Contract No. DA-19-016-CIVENG-63-64

SAFETY PAYS

INFORMATION DWG.

CORPS OF ENGINEERS — U. S. ARMY

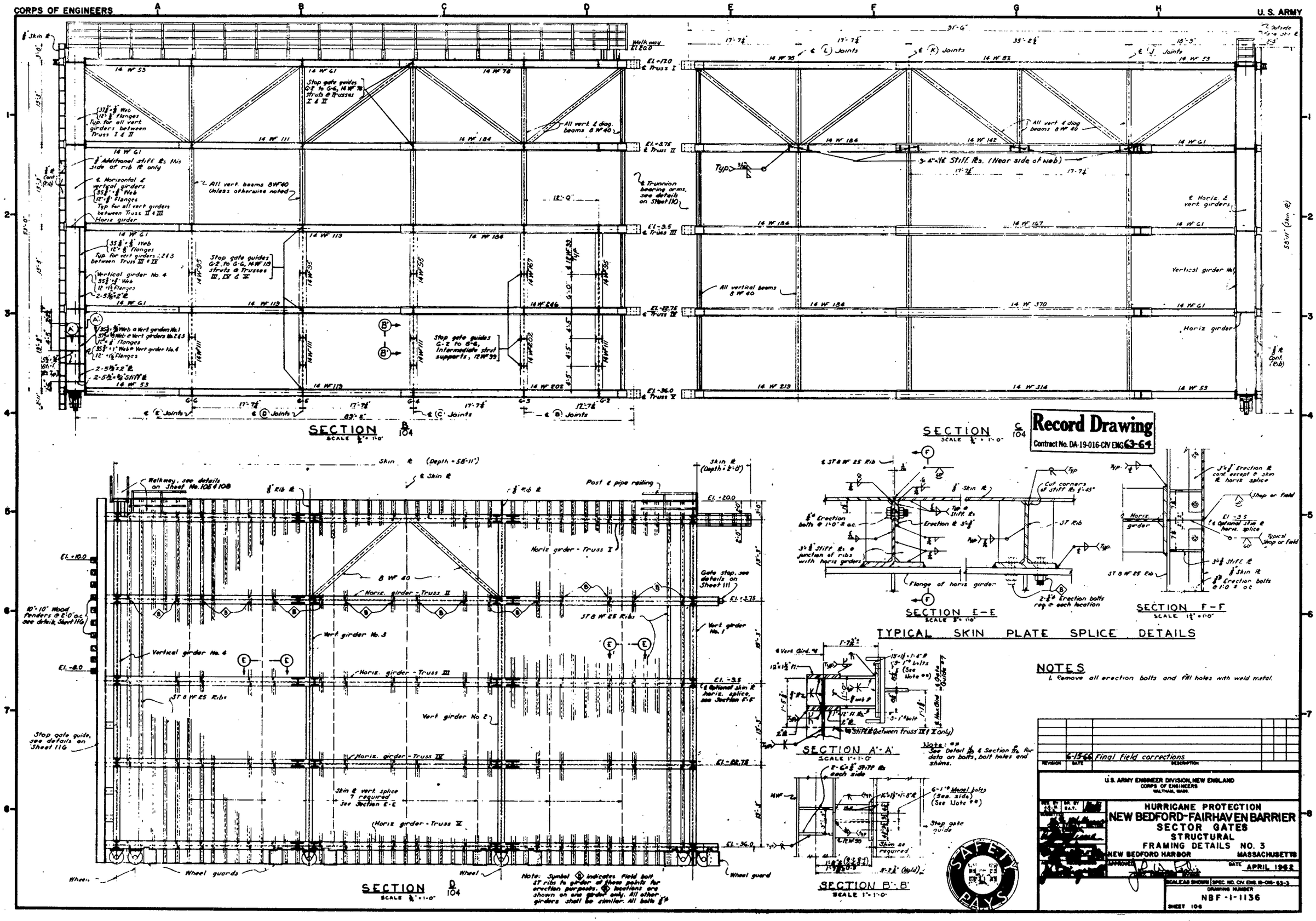

INFORMATION DWG.

NORFOLK FLOODWALL GATE CLOSURES

US Army Corps of Engineers
Norfolk District

NO.	DESCRIPTION	DATE	APPD.

DESIGNED XXX
CHKD. XXX
CHECKED XXX
SUBMITTED XXX
SIZE XX-XXX-13
SCALE AS SHOWN
PROJECT NO XXXXXX
SUPPLEMENTAL FILE NO XXX
FY NO XXXXXX
CONTRACT/SOLICITATION NO YR-X-XXXX
Last saved on:
File name:
Plot scale: 1:1

NORFOLK DISTRICT
CORPS OF ENGINEERS
NORFOLK, VIRGINIA

10% DESIGN SUBMITTAL M

COLLIER COUNTY COASTAL STORM RISK MANAGEMENT (CSRM) STUDY

NORFOLK FLOODWALL GATE CLOSURES

SHEET REFERENCE NUMBER
S-REF3
SHEET XXX OF XXX

REVISIONS			
SYM	DESCRIPTION	DATE	APPROVED

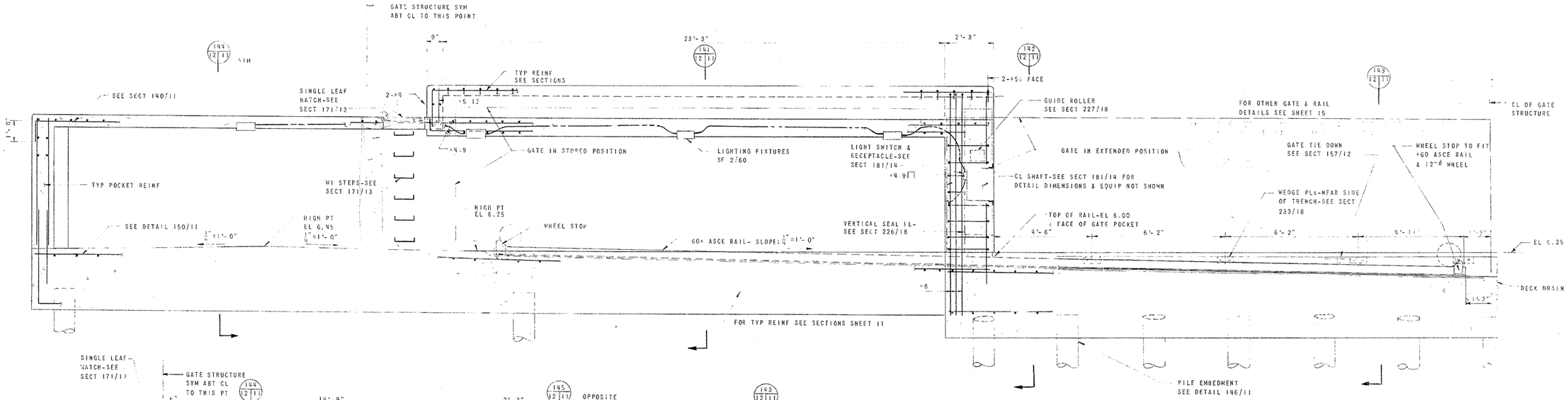

NOTE: FOR CONDUITS & SLEEVES SEE SHEET 8.

SECTION (155 / 11 12)
SCALE: 1/2"=1'-0"

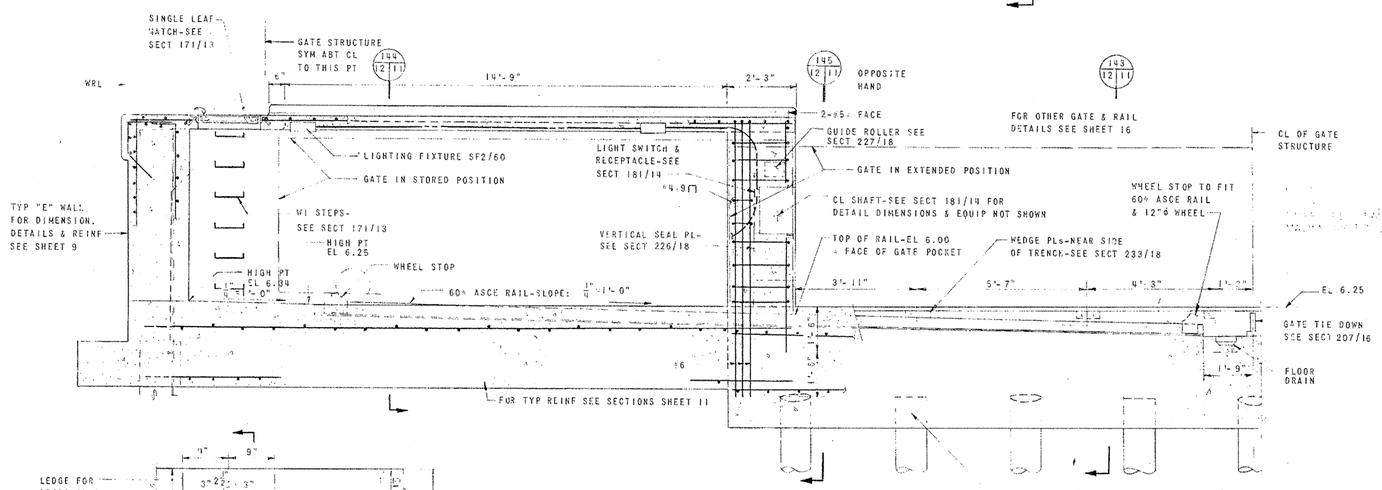

SECTION (156 / 11 12)
SCALE: 1/2"=1'-0"

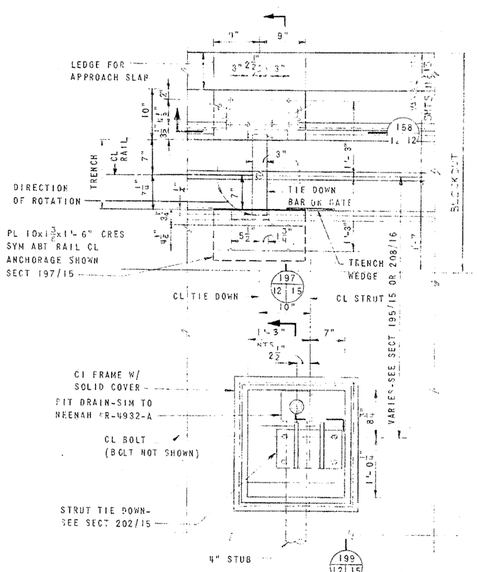

PLAN SECTION (157 / 11 12)
SCALE: 1"=1'-0"

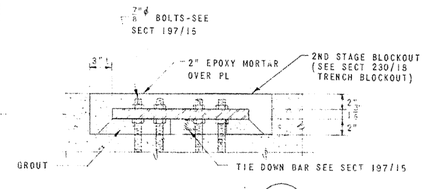

SECTION (158 / 12 12)
SCALE: 1 1/2"=1'-0"

NOTE:
GATE AND STRUT TIE DOWN SHOWN SECT 157/12 APPLIES AS SHOWN AND OPPOSITE HAND TO THE MAIN ST. GATE. THE STRUT TIE DOWN AS SHOWN WILL BE SIMILAR FOR THE RAMP "G" GATE. THE GATE TIE DOWN AS SHOWN WILL BE SIMILAR FOR THE NORTH SERVICE ROAD GATE.

NOTES:
1. ALL VERTICAL TIMBER PILES SHOWN ON THIS SHEET WILL BE PAID FOR UNDER CONTRACT PAYMENT ITEM 4a
2. ALL BATTERED TIMBER PILES SHOWN ON THIS SHEET WILL BE PAID FOR UNDER CONTRACT PAYMENT ITEM 4b
3. TEST PILE LOADING WILL BE PAID FOR UNDER CONTRACT PAYMENT ITEM 4c
4. ALL ELECTRICAL WORK AND LIGHTING SHOWN ON THIS SHEET WILL BE PAID FOR UNDER CONTRACT PAYMENT ITEM 9
5. EXCEPT AS OTHERWISE NOTED OR INDICATED, ALL WORK SHOWN ON THIS SHEET WILL BE PAID UNDER CONTRACT PAYMENT ITEM 1

GRAPHIC SCALES
1 1/2"=1'-0": 0, 3", 6", 9", 1', 2'
1/2"=1'-0": 0, 1', 2', 3', 6'

HAYES, SEAY, MATTERN & MATTERN ARCHITECTS & ENGINEERS ROANOKE, VIRGINIA	U. S. ARMY ENGINEER DISTRICT, NORFOLK CORPS OF ENGINEERS NORFOLK, VIRGINIA
DES. BY / CK'D BY / SUB. BY	FLOODWALL NORFOLK, VA. CENTRAL BUSINESS DISTRICT
APP. REC.	
CHIEF, STRUCTURAL SECTION	
APP. REC.	MAIN ST. & RAMP "G"
CHIEF, DESIGN BRANCH	GATE STRUCTURE - SECTIONS
APP. REC.	
CHIEF, ENGINEERING DIVISION	
APPROVED:	CODE IDENT. NO. / SIZE F / NORFOLK DISTRICT FILE NO. C-58-10-11(12)
COL., CORPS OF ENGRS, DISTRICT ENGINEER	SCALE: AS NOTED / JANUARY 1968 / SHEET 12 OF 32

REVISIONS			
SYM	DESCRIPTION	DATE	APPROVED

NOTES:

1. ALL VERTICAL TIMBER PILES SHOWN ON THIS SHEET WILL BE PAID FOR UNDER CONTRACT PAYMENT ITEM (8a).
2. ALL BATTERED TIMBER PILES SHOWN ON THIS SHEET WILL BE PAID FOR UNDER CONTRACT PAYMENT ITEM (8b).
3. TEST PILE LOADING WILL BE PAID FOR UNDER CONTRACT PAYMENT ITEM (8c).
4. ALL ELECTRICAL WORK AND LIGHTING SHOWN ON THIS SHEET WILL BE PAID FOR UNDER CONTRACT PAYMENT ITEM (9).
5. EXCEPT AS OTHERWISE NOTED OR INDICATED, ALL WORK SHOWN ON THIS SHEET WILL BE PAID UNDER CONTRACT PAYMENT ITEM (1).

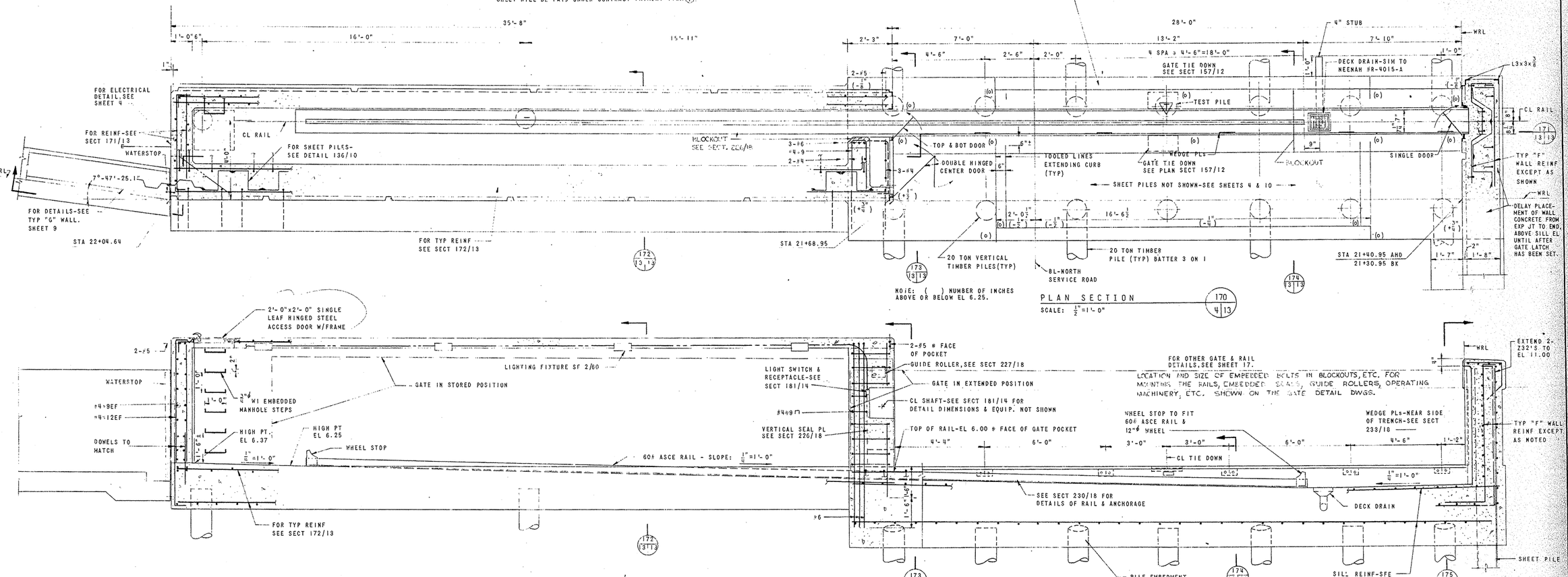

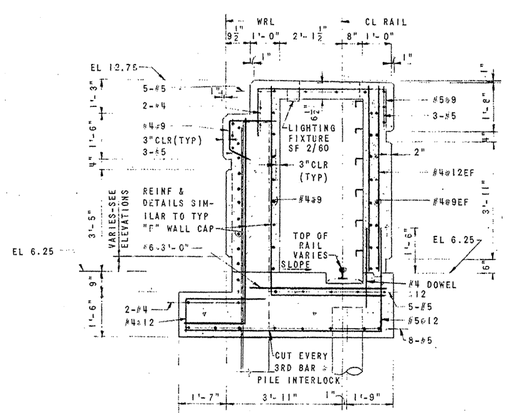

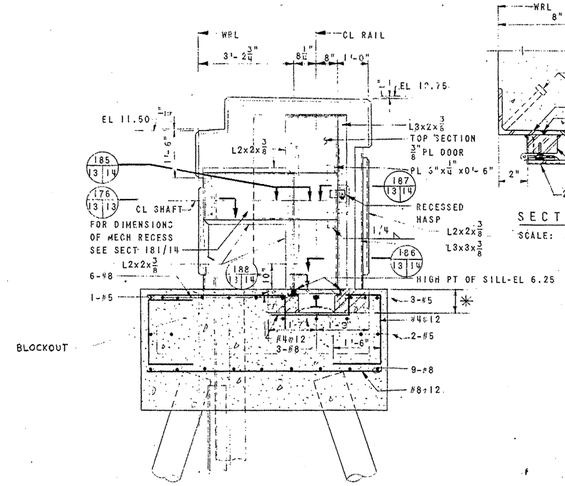

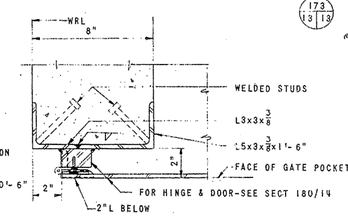

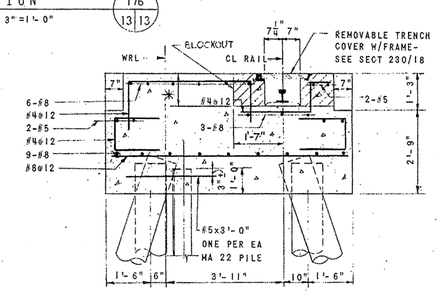

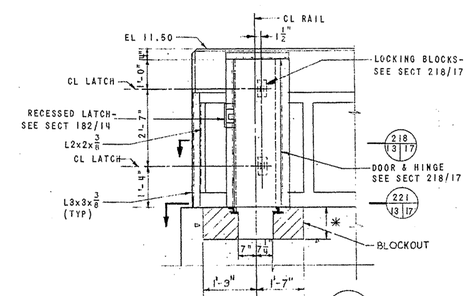

* BOTTOM ELEVATION OF BLOCKOUT SHALL COINCIDE WITH BOTTOM OF TRENCH.

GRAPHIC SCALES

3"=1'-0" 0 1" 2" 3" 6" 9" 1'

1/2"=1'-0" 0 1' 2' 3' 6'

HAYES, SEAY, MATTERN & MATTERN ARCHITECTS & ENGINEERS ROANOKE, VIRGINIA	U. S. ARMY ENGINEER DISTRICT, NORFOLK CORPS OF ENGINEERS NORFOLK, VIRGINIA
DES. BY / CK'D BY / SUB. BY	FLOODWALL NORFOLK, VA. CENTRAL BUSINESS DISTRICT
APP. REC.	
CHIEF, STRUCTURAL SECTION	NORTH SERVICE ROAD GATE STRUCTURE
APP. REC.	
CHIEF, DESIGN BRANCH	
APP. REC.	
CHIEF, ENGINEERING DIVISION	
APPROVED:	CODE IDENT. NO. / SIZE / NORFOLK DISTRICT FILE NO.
COL., CORPS OF ENGRS, DISTRICT ENGINEER	F / C-56-10-11(13)
	SCALE AS NOTED / JANUARY 1968 / SHEET 13 OF 72

REVISIONS			
SYM	DESCRIPTION	DATE	APPROVED

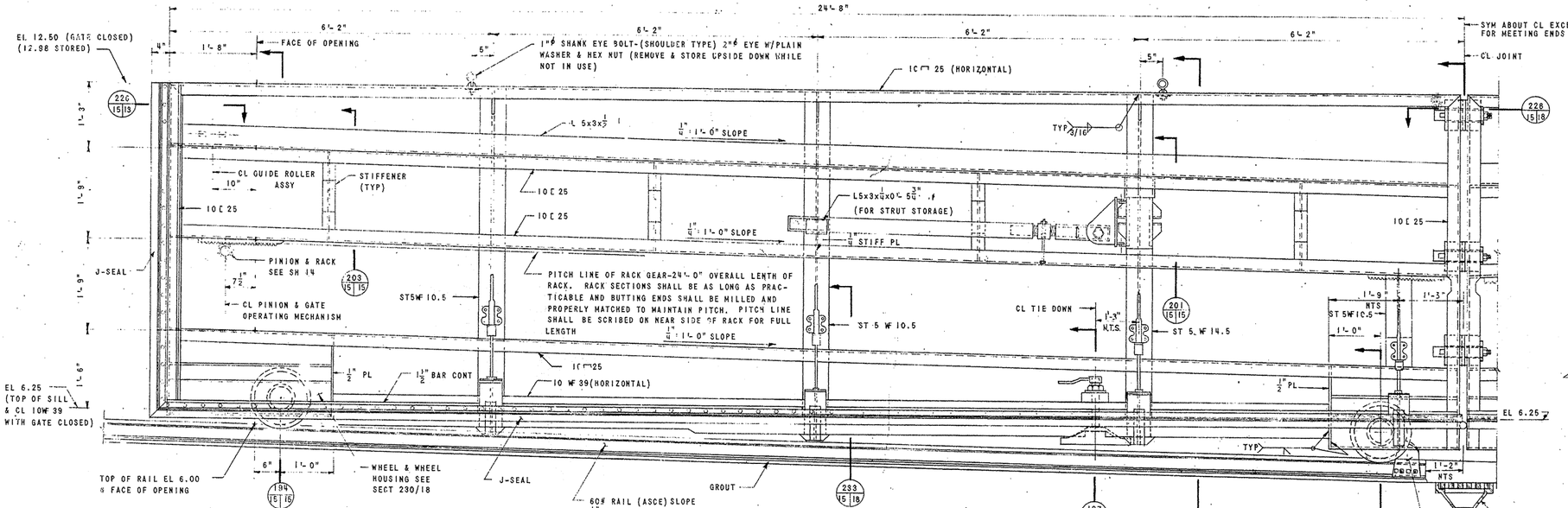

MAIN STREET GATE ELEVATION
SCALE: 1"=1'-0"
(PROTECTED SIDE VIEW SHOWING SOUTH(LEFT) LEAF, NORTH LEAF OPPOSITE HAND AND SIMILAR)

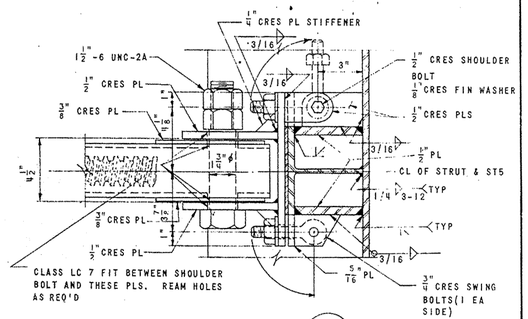

SECTION 200/15|15
SCALE: 3"=1'-0"

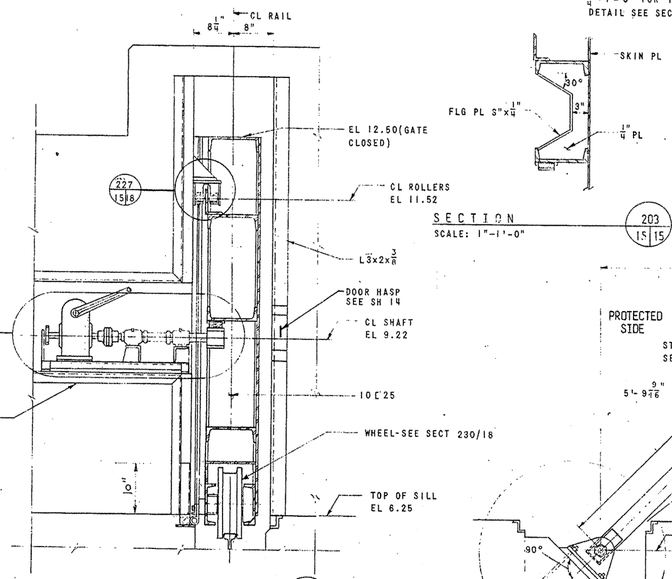

SECTION 203/15|15
SCALE: 1"=1'-0"

SECTION 194/15|15
SCALE: 1"=1'-0"

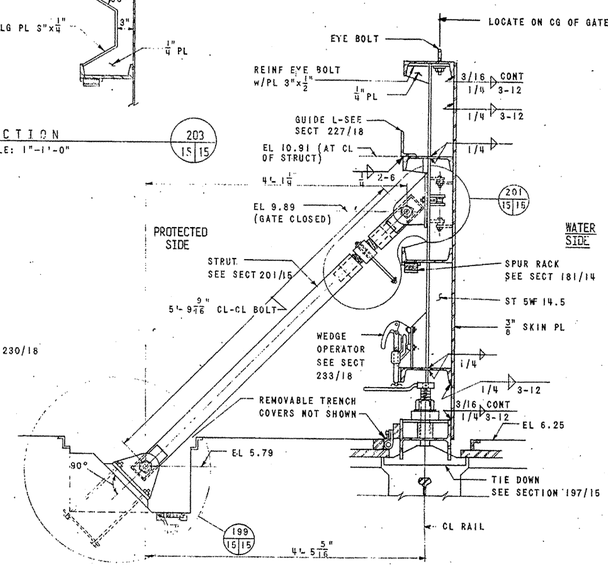

SECTION 195/15|15
SCALE: 1"=1'-0"

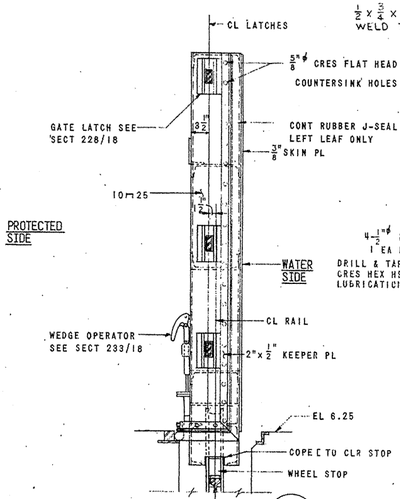

SECTION 196/15|15
SCALE: 1"=1'-0"

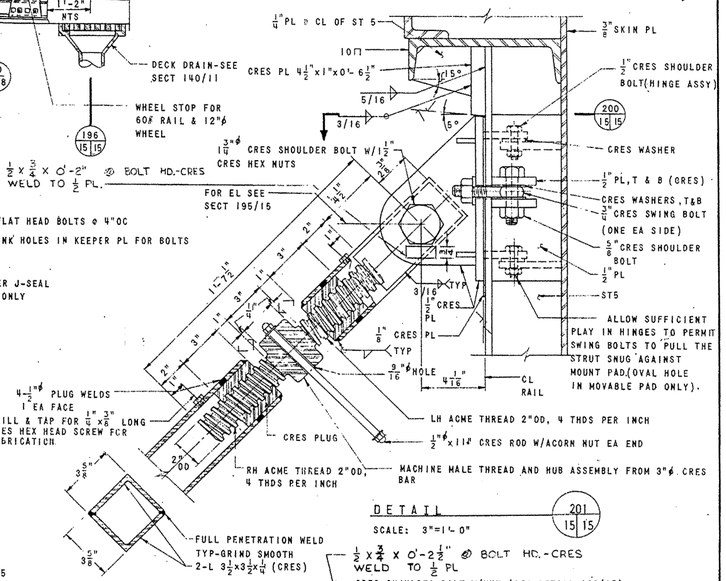

DETAIL 201/15|15
SCALE: 3"=1'-0"

SECTION 202/15|15
SCALE: 3"=1'-0"

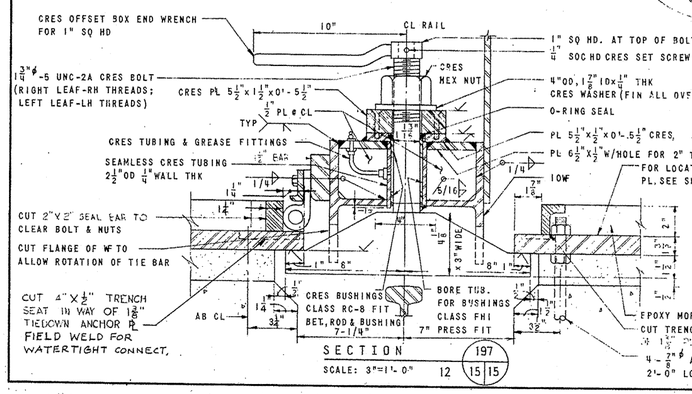

SECTION 197/15|15
SCALE: 3"=1'-0"

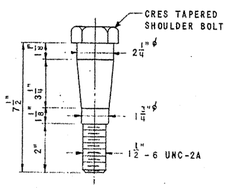

DETAIL 198/15|15
SCALE: 3"=1'-0"

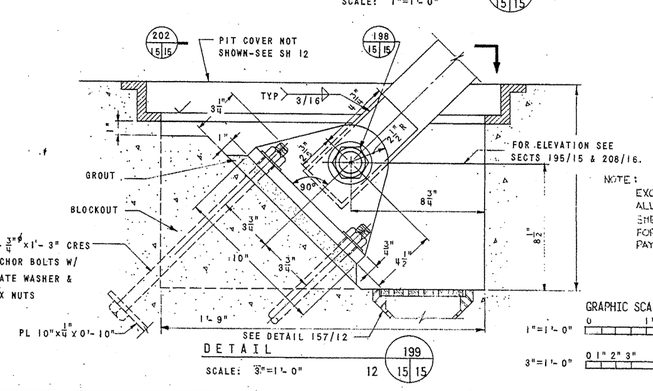

DETAIL 199/15|15
SCALE: 3"=1'-0"

NOTE:
EXCEPT AS OTHERWISE INDICATED, ALL WORK SHOWN ON THIS SHEET WILL BE PAID FOR UNDER CONTRACT PAYMENT ITEM 1.

GRAPHIC SCALES
1"=1'-0" 0 1' 2' 3'
3"=1'-0" 0 1" 2" 3" 6" 9" 1'

HAYES, SEAY, MATTERN & MATTERN ARCHITECTS & ENGINEERS ROANOKE, VIRGINIA	U. S. ARMY ENGINEER DISTRICT, NORFOLK CORPS OF ENGINEERS NORFOLK, VIRGINIA
DES. BY / CK'D BY / SUB. BY	FLOODWALL NORFOLK, VA. CENTRAL BUSINESS DISTRICT
APP. REC.	
CHIEF, MECHANICAL SECTION	
APP. REC.	MAIN STREET GATE ELEVATION
CHIEF, DESIGN BRANCH	
APP. REC.	
CHIEF, ENGINEERING DIVISION	
APPROVED:	
COL., CORPS OF ENGRS, DISTRICT ENGINEER	CODE IDENT. NO. F / SIZE / NORFOLK DISTRICT FILE NO. C-56-10-11(15)
	SCALE: AS NOTED / JANUARY 1968 / SHEET 15 OF 32

REVISIONS			
SYM	DESCRIPTION	DATE	APPROVED

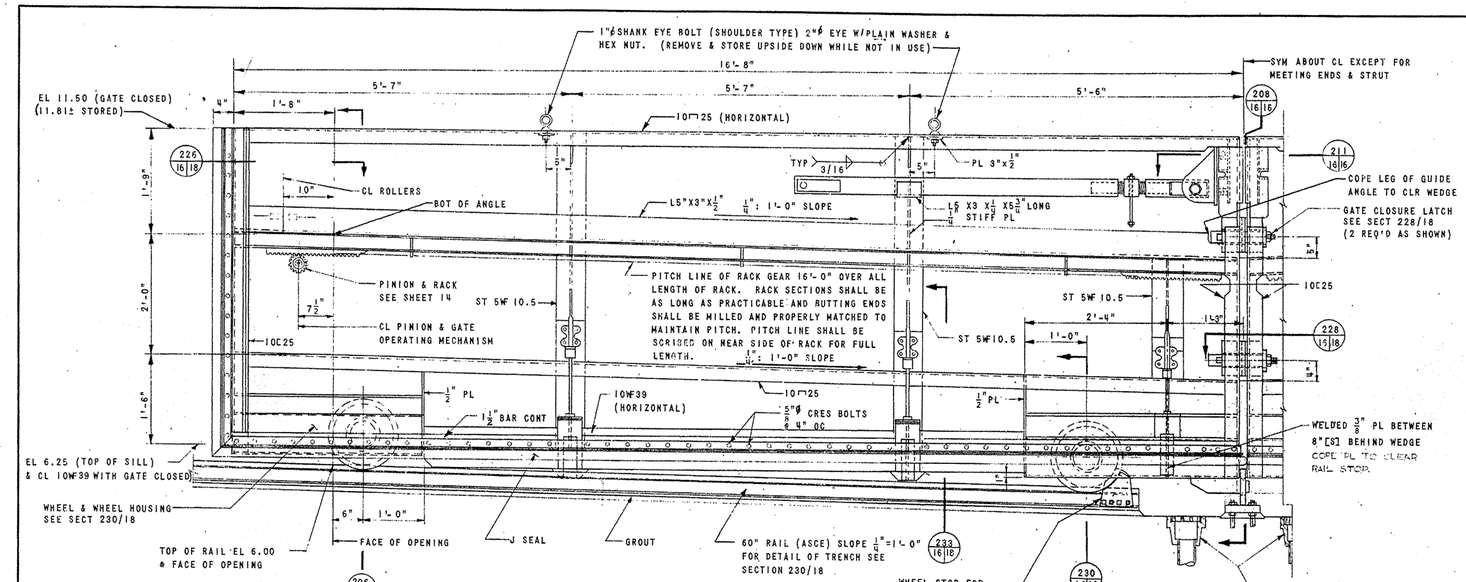

RAMP "G" GATE ELEVATION

SCALE 1"=1'-0"

(PROTECTED SIDE VIEW SHOWING LEFT LEAF, RIGHT LEAF OPPOSITE HAND & SIMILAR)

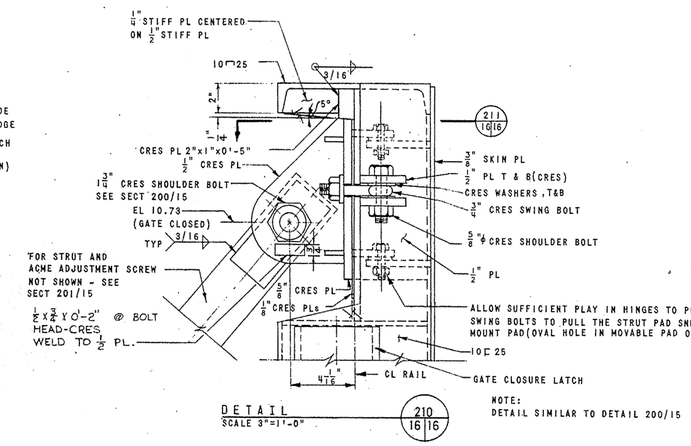

NOTE: DETAIL SIMILAR TO DETAIL 200/15

DETAIL 210/16|16

SCALE 3"=1'-0"

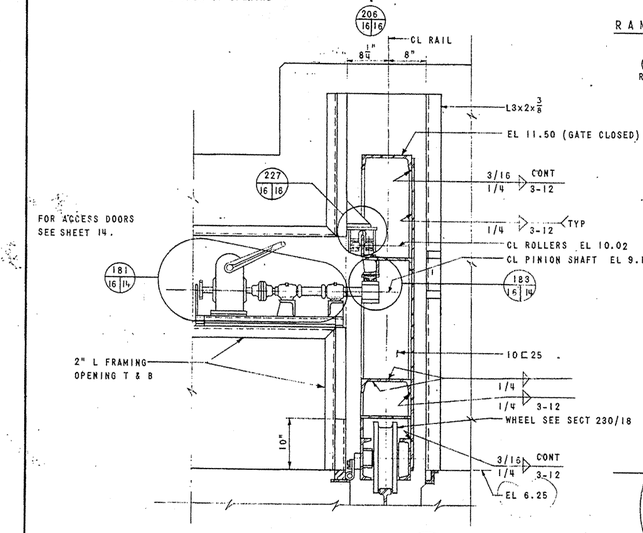

SECTION 206/16|16

SCALE 1"=1'-0"

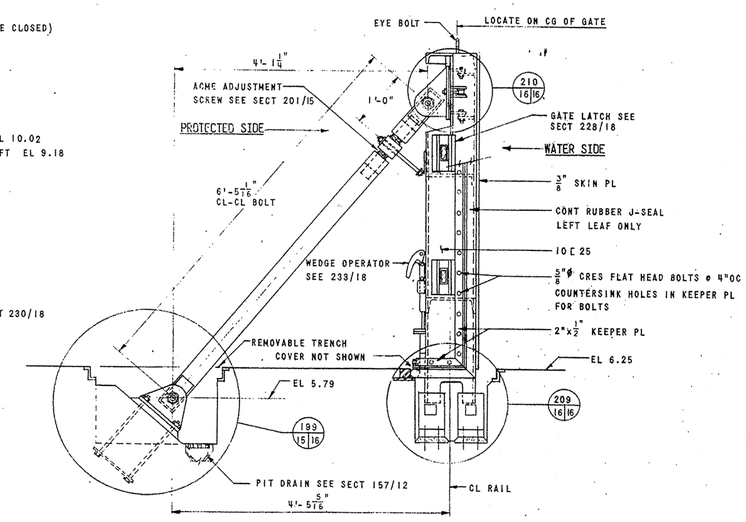

SECTION 208/16|16

SCALE 1"=1'-0"

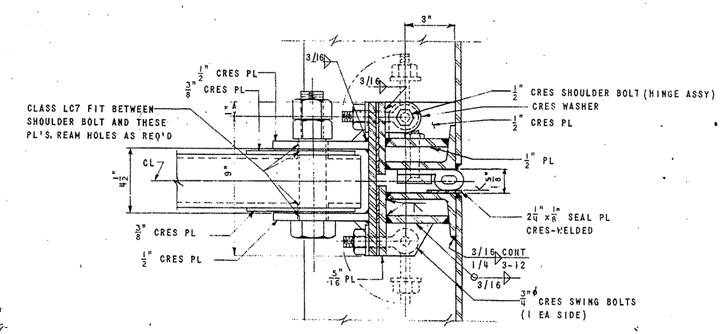

SECTION 211/16|16

SCALE 3"=1'-0"

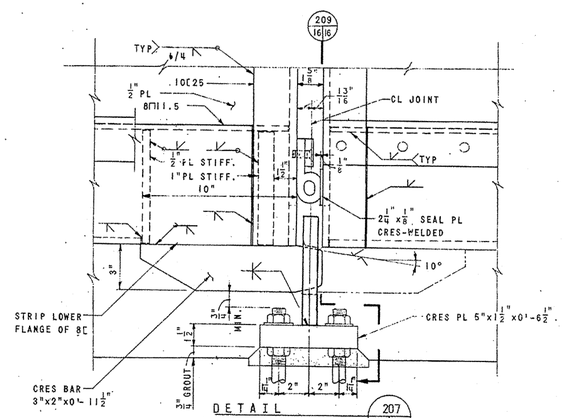

DETAIL 207/16|16

SCALE 3"=1'-0"

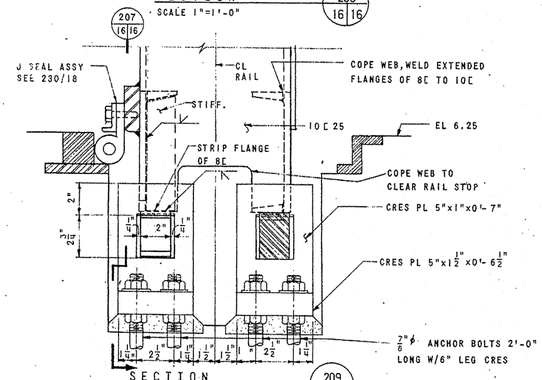

SECTION 209/16|16

SCALE 3"=1'-0"

NOTES:

1. EXCEPT AS OTHERWISE NOTED OR INDICATED, ALL WORK SHOWN ON THIS SHEET WILL BE PAID FOR UNDER CONTRACT PAYMENT ITEM. (1)

GRAPHIC SCALES

1"=1'-0" 0 1' 2' 3'

3"=1'-0" 0 1" 2" 3" 6" 9" 1'

HAYES, SEAY, MATTERN & MATTERN ARCHITECTS & ENGINEERS ROANOKE, VIRGINIA	U. S. ARMY ENGINEER DISTRICT, NORFOLK CORPS OF ENGINEERS NORFOLK, VIRGINIA	
DES. BY WGS / CK'D BY / SUB. BY	FLOODWALL NORFOLK, VA. CENTRAL BUSINESS DISTRICT	
APP. REC.		
CHIEF, MECHANICAL SECTION		
APP. REC.		
CHIEF, DESIGN BRANCH	RAMP "G" GATE ELEVATION	
APP. REC.		
CHIEF, ENGINEERING DIVISION		
APPROVED:	CODE IDENT. NO. / SIZE F	NORFOLK DISTRICT FILE NO. C-56-10-11(16)
COL, CORPS OF ENGRS, DISTRICT ENGINEER	SCALE: AS NOTED / JANUARY, 1968	SHEET 16 OF 32

REVISIONS			
SYM	DESCRIPTION	DATE	APPROVED

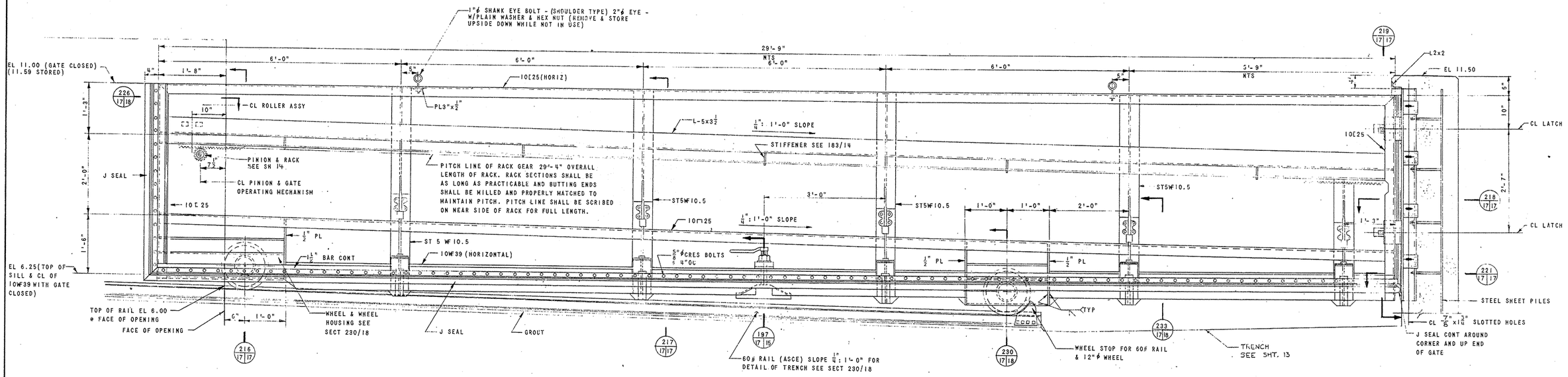

NORTH SERVICE ROAD GATE ELEVATION
SCALE 1"=1'-0"
(PROTECTED SIDE VIEW)

INSTALLATION NOTE:
LIMITED INSTALLATION CLEARANCE MAY REQUIRE REMOVAL OF RUBBER J-SEALS BEFORE INSTALLING THIS GATE LEAF.

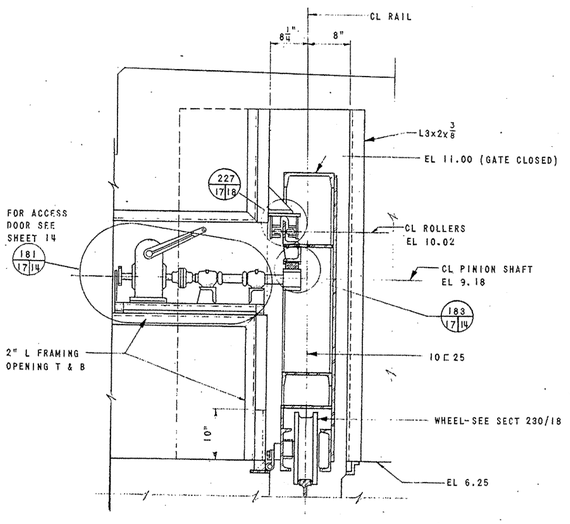

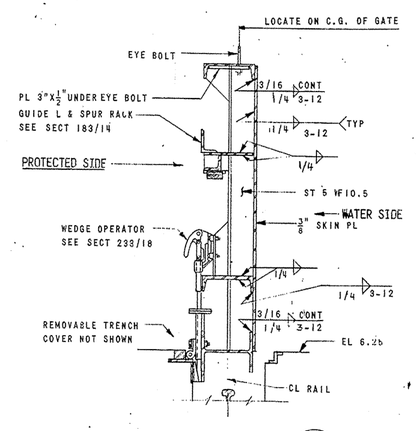

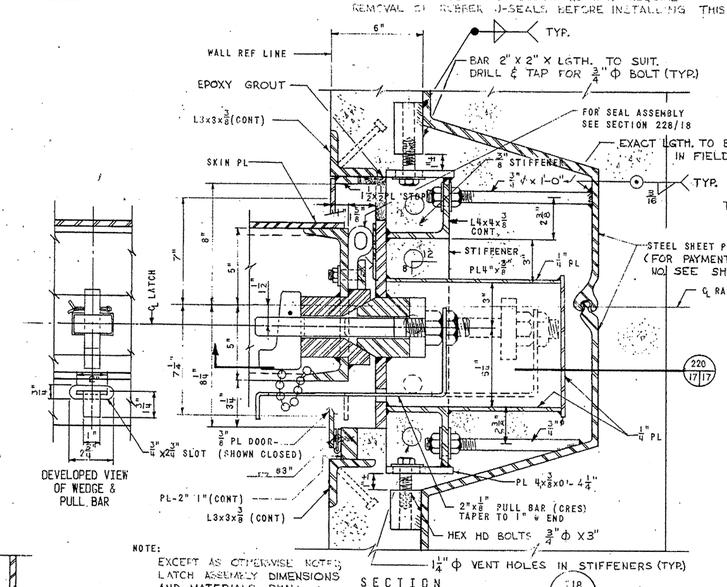

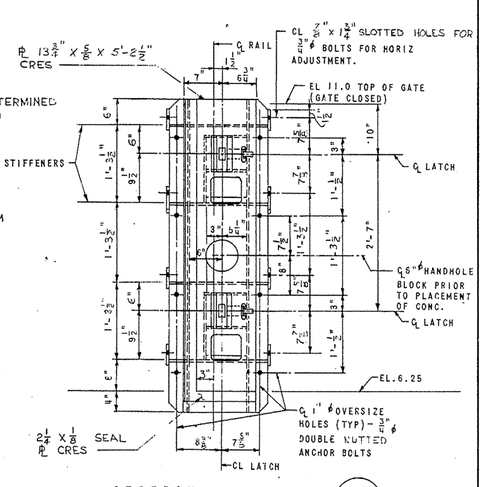

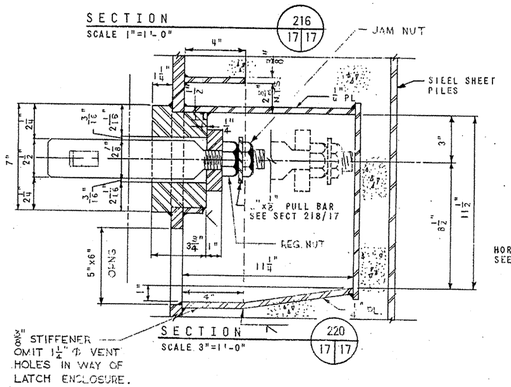

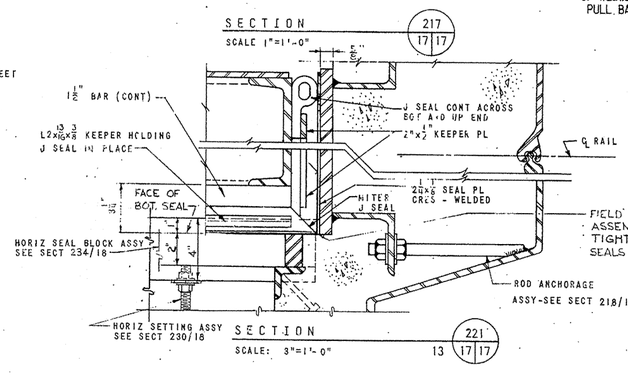

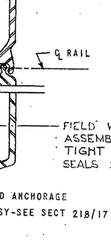

NOTE:
EXCEPT AS OTHERWISE NOTED LATCH ASSEMBLY DIMENSIONS AND MATERIALS SHALL CONFORM TO SECT. 228/18.

FIELD WELD JOINT BETWEEN HORIZONTAL SEAL BLOCK ASSEMBLY AND END SEAL ASSEMBLY FOR A WATER-TIGHT CONNECTION. ALL WELDS IN CONTACT WITH SEALS SHALL BE GROUND SMOOTH.

NOTE:
EXCEPT AS OTHERWISE INDICATED, ALL WORK SHOWN ON THIS SHEET WILL BE PAID FOR UNDER CONTRACT PAYMENT ITEM 1.

GRAPHIC SCALES
1"=1'-0" 0 1' 2' 3'
3"=1'-0" 0 1" 2" 3" 6" 9" 1'

HAYES, SEAY, MATTERN & MATTERN ARCHITECTS & ENGINEERS ROANOKE, VIRGINIA	U. S. ARMY ENGINEER DISTRICT, NORFOLK CORPS OF ENGINEERS NORFOLK, VIRGINIA
DES. BY / CK BY / SUB. BY / APP. REC.	FLOODWALL NORFOLK, VA CENTRAL BUSINESS DISTRICT
CHIEF, MECHANICAL SECTION / APP. REC.	
CHIEF, DESIGN BRANCH / APP. REC.	NORTH SERVICE ROAD GATE ELEVATION
CHIEF, ENGINEERING DIVISION APPROVED:	CODE IDENT. NO. / SIZE F / NORFOLK DISTRICT FILE NO. C-56-10-11(17)
COL., CORPS OF ENGRS, DISTRICT ENGINEER	SCALE: AS NOTED / JANUARY 1968 / SHEET 17 OF 33

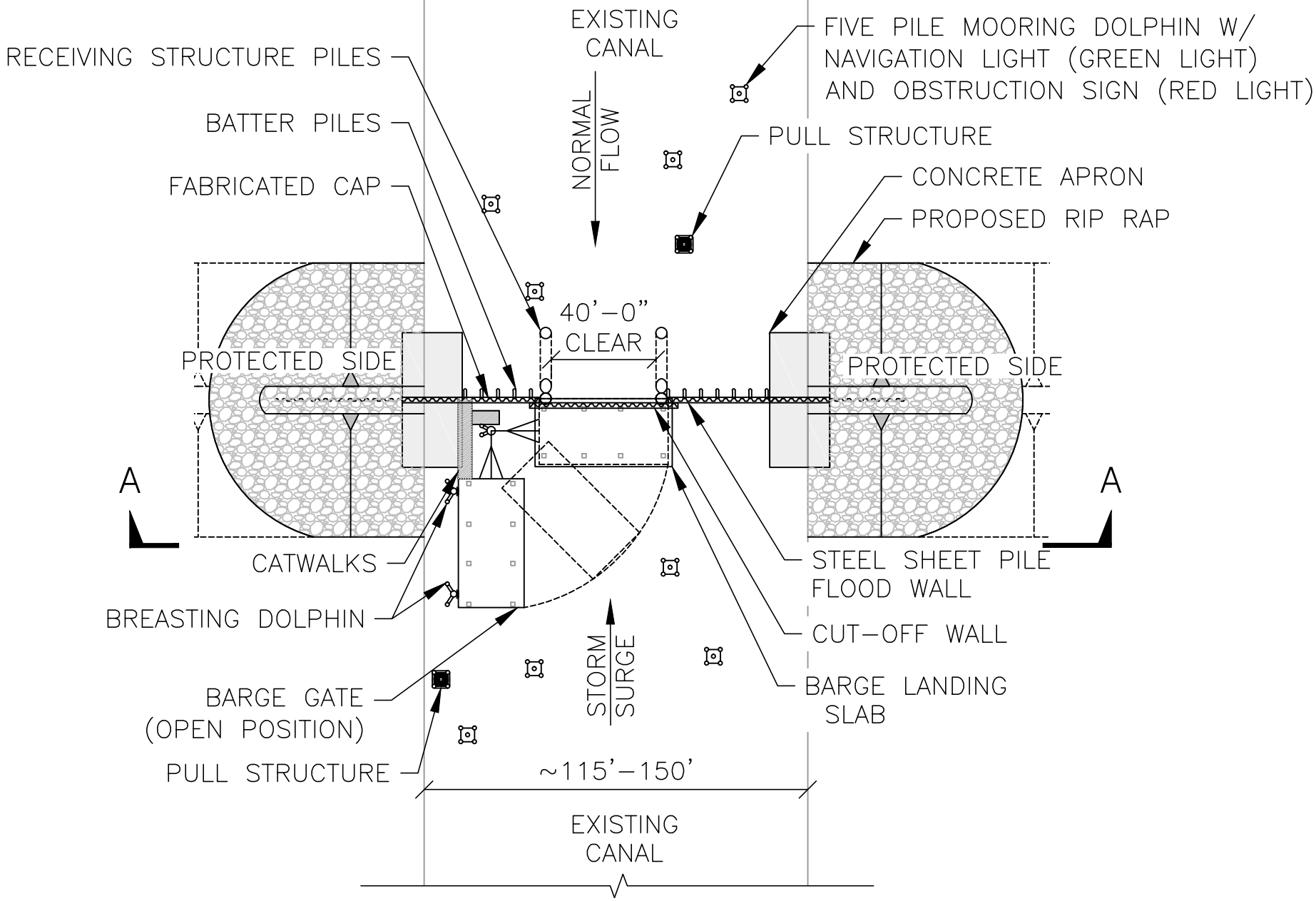

APPLICATION BY: ATKINS 2639 N. Monroe St. Building C - Tallahassee, Florida 32303 - 850.575.1800 FBPR Certificate of Authorization No. 24	SITE 1	COASTAL PROTECTION AND RESTORATION AUTHORITY 450 LAUREL STREET BATON ROUGE, LOUISIANA 70801	45' BARGE GATE (40' MIN. CLEAR PASSAGE)	EXHIBIT 1
			STATE PROJECT NUMBER:	DATE: JUNE 25 2014
DRAWN BY: SMC/GJM	DESIGNED BY: DLC	APPROVED BY:	FEDERAL PROJECT NUMBER:	SHEET 1 OF 7

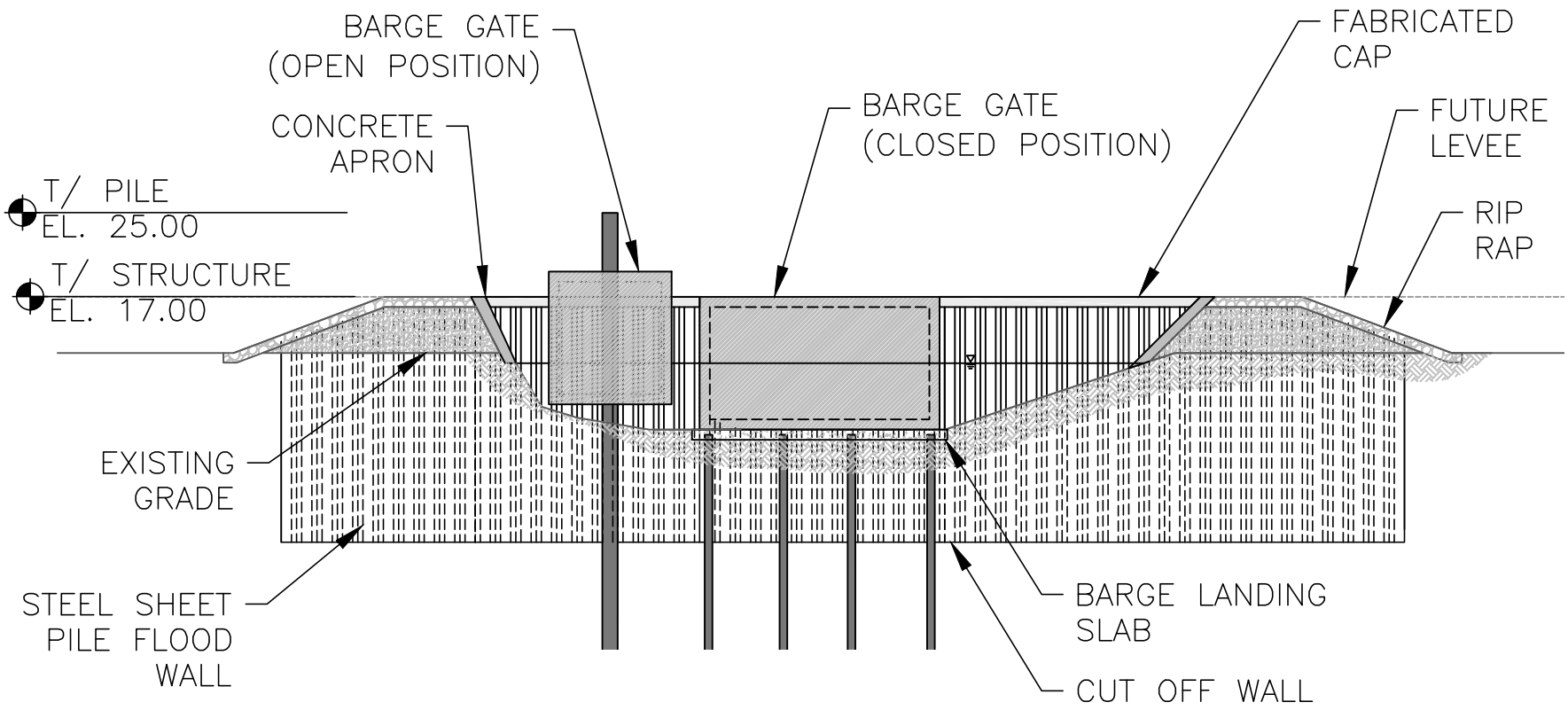

SECTION A-A

SCALE: N.T.S.

APPLICATION BY: ATKINS 2639 N. Monroe St. Building C - Tallahassee, Florida 32303 - 850.575.1800 FBPR Certificate of Authorization No. 24	SITE 1	COASTAL PROTECTION AND RESTORATION AUTHORITY 450 LAUREL STREET BATON ROUGE, LOUISIANA 70801	45' BARGE GATE (40' MIN. CLEAR PASSAGE)	EXHIBIT 2
			STATE PROJECT NUMBER:	DATE: JUNE 25 2014
DRAWN BY: SMC/GJM	DESIGNED BY: DLC	APPROVED BY:	FEDERAL PROJECT NUMBER:	SHEET 2 OF 7

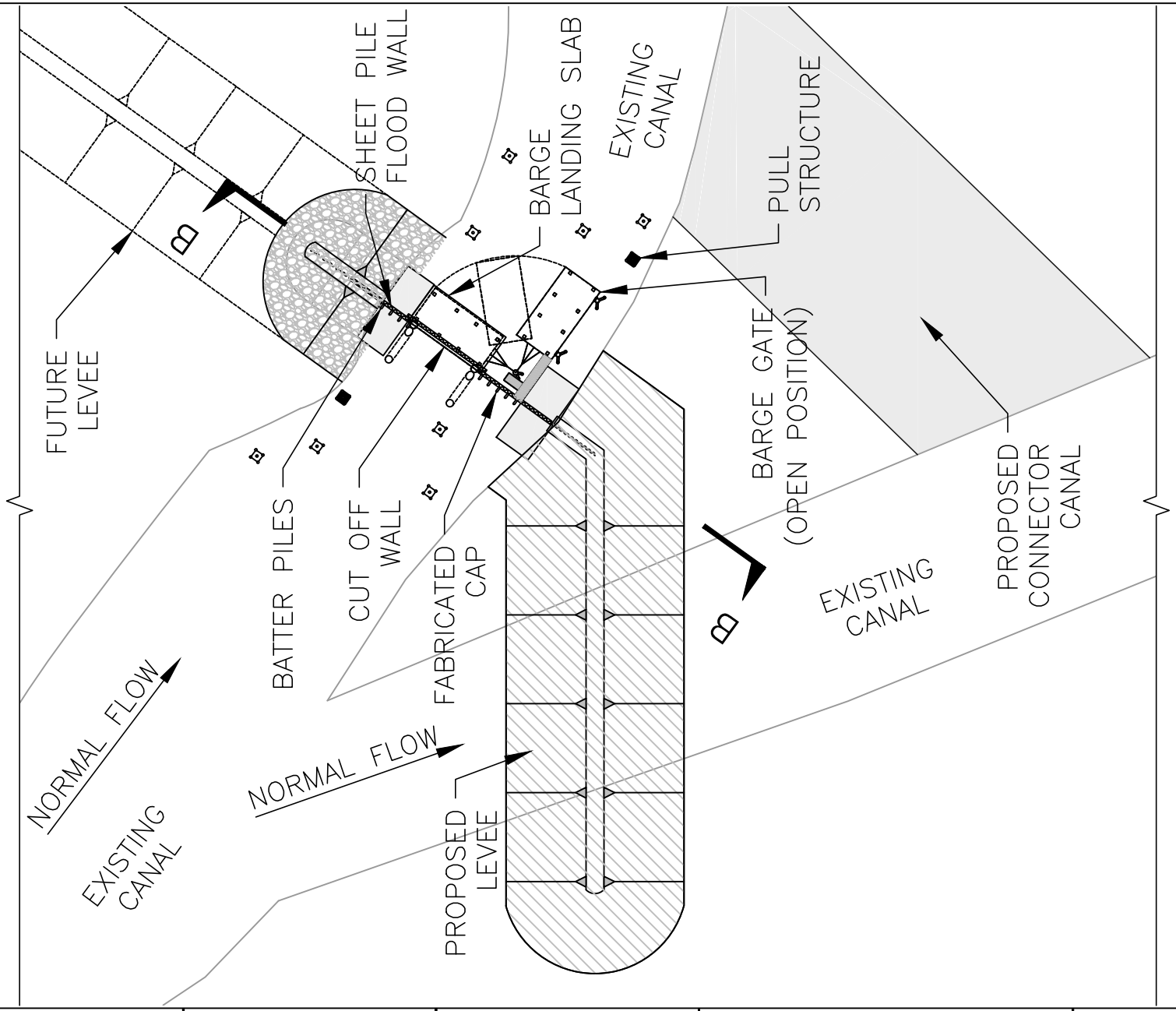

APPLICATION BY: ATKINS 2639 N. Monroe St. Building C - Tallahassee, Florida 32303 - 850.575.1800 FBPR Certificate of Authorization No. 24	SITE 2	COASTAL PROTECTION AND RESTORATION AUTHORITY 450 LAUREL STREET BATON ROUGE, LOUISIANA 70801	45' BARGE GATE (40' MIN. CLEAR PASSAGE)	EXHIBIT 3
			STATE PROJECT NUMBER:	DATE: JUNE 25 2014
DRAWN BY: SMC/GJM	DESIGNED BY: DLC	APPROVED BY:	FEDERAL PROJECT NUMBER:	SHEET 3 OF 7

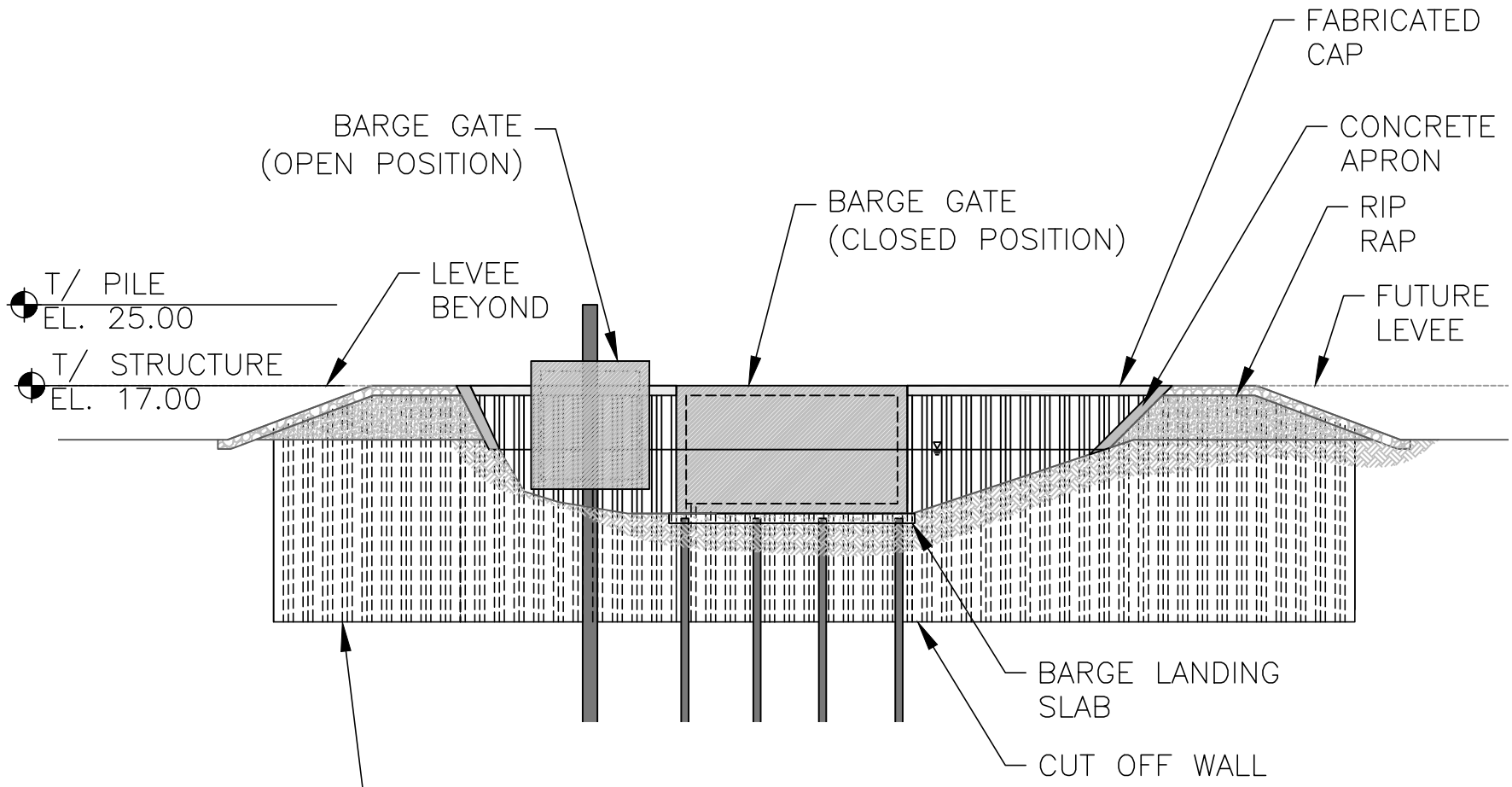

SECTION B-B

SCALE: N.T.S.

APPLICATION BY: ATKINS 2639 N. Monroe St. Building C - Tallahassee, Florida 32303 - 850.575.1800 FBPR Certificate of Authorization No. 24	SITE 2	COASTAL PROTECTION AND RESTORATION AUTHORITY 450 LAUREL STREET BATON ROUGE, LOUISIANA 70801	45' BARGE GATE (40' MIN. CLEAR PASSAGE)	EXHIBIT 4
			STATE PROJECT NUMBER:	DATE: JUNE 25 2014
DRAWN BY: SMC/GJM	DESIGNED BY: DLC	APPROVED BY:	FEDERAL PROJECT NUMBER:	SHEET 4 OF 7

CHAPTER 5 REFERENCES

1. Atkins (n.d.). 2014. CPRA CDBG Bayou Tigre Flood Control Project (TV-67). Basis of Design Report.

2. Norfolk Coastal Storm Risk Management Study. 2018. USACE Norfolk District.

3. USACE. 2011. Evaluation of I-walls. Engineer Technical Letter 1110-2-575. U.S. Army Corps of Engineers.

4. USACE. 2017. Design and Evaluation of I-Walls Including Sheet Pile Walls. Engineering and Construction Bulletin No. 2017-3. U.S. Army Corps of Engineers.

5. USACE. 2006. Coastal Engineering Manual (CEM). U.S. Army Corps of Engineers

6. USACE. 1989. Retaining and Flood Walls. Engineer Manual 1110-2-2502. U.S. Army Corps of Engineers.

US Army Corps of Engineers®

GEOTECHINCAL SUB - APPENDIX

US Army Corps of Engineers®

Norfolk District

Collier County Coastal Storm Risk Management Study

Norfolk, Virginia

GEOTECHNICAL SUB-APPENDIX

JULY 2020

PAGE INTENTIONALLY LEFT BLANK

Table of Contents

CHAPTER 1 INTRODUCTION 6
1.1 AREA DESCRIPTION 6
1.2 PREVIOUS GEOTECHNICAL STUDIES 8
CHAPTER 2 GEOLOGY, GROUND WATER AND SEISMICITY 8
2.1 REGIONAL GEOLOGY 8
2.2 LOCAL GEOLOGY 9
2.3 TOPOGRAPHY AND DRAINAGE 10
2.4 GROUND WATER 10
2.4.1 REGIONAL GROUND WATER 10
2.4.2 LOCAL GROUND WATER 11
2.5 SEISMICITY 11
CHAPTER 3 EXISTING FLOOD RISK MANAGEMENT STRUCTURES 12
CHAPTER 4 STUDY MEASURES 12
4.1 GENERAL 12
4.2 MEASURE INFORMARTION 12
CHAPTER 5 EXISTING GEOTECHNICAL INFORMATION 13
5.1 GENERAL 13
5.2 WIGGINS PASS 13
5.3 VANDERBILT BEACH ROAD 14
5.4 NAPLES AIRPORT 14
5.5 TAMIAMI TRAIL NORTH 14
CHAPTER 6 GEOTECHNICAL ASPECTS OF FEASIBILTY STUDY MEASURES 14
6.1 FLOODWALL DESIGN 15
6.1.1 GENERALIZED SUBSURFACE PROFILE 15
6.1.2 T-WALL DESIGN 15
6.2 SAND SOURCES 16
6.2.1 GENERAL 16
6.2.2 OFF SHORE SAND SOURCES 17
6.2.3 INLAND SOURCES 17
6.3 STORM SURGE BARRIERS 17
6.3.1 FUTURE DESIGN ACTIVITY 18
CHAPTER 7 CONSTRUCTABILITY 18
7.1 CONSTRUCTION ADJACENT TO EXISTING STRUCTURES 18
7.2 MAN-MADE FILL MATERIALS 19
7.3 QA/QC PLAN 19

7.4 HARD BOTTOM IMPACTS 19
7.5 TURBIDITY MONTORING 19
7.6 TRAFFIC AND TOURISM IMPACTS 19
CHAPTER 8 REFERENCES 20

APPENDICES

APPENDIX A: IDEALIZED SOIL AND BEDROCK PROFILE
APPENDIX B: PRELIMINARY AUGER CAST PILE AXIAL CAPACITIES
APPENDIX C: PRELIMINARY T-WALL CALCULATIONS
APPENDIX D: PRELIMINARY AUGER CAST PILE CAPACITIES CHARTS
APPENDIX E: OFF SHORE BORROW AREA LOCATIONS
APPENDIX F: PROJECT AREA EXISTING BORING LOGS

LIST OF FIGURES

FIGURE 1-1: PROJECT AREA MAP
FIGURE 1-2: MAIN PROJECT AREAS MAP
FIGURE 1-3: NORTH COUNTY BEACH LOCATIONS
FIGURE 2-2: QUADRANGLE MAP OF COLLIER COUNTY

LIST OF TABLES

TABLE 1-1: HISTORIC EARTHQUAKES NEAR COLLIER COUNTY

PAGE INTENTIONALLY LEFT BLANK

CHAPTER 1 INTRODUCTION

This report presents the results of the geotechnical engineering evaluation of the area covered by the Collier County Coastal Storm Risk Management (CSRM) study. The purpose of this report is to document the geotechnical existing condition of the study area and to provide geotechnical information in support of the final array of alternatives in the Feasibility Study.

This study was authorized by Section 4033 of the Water Resources Development Act of 2007.

"The Secretary shall conduct a study to determine the feasibility of carrying out a project for hurricane and storm damage reduction and flood damage reduction in the vicinity of Vanderbilt, Park Shore, and Naples beaches, Collier County, Florida."

Collier County, Florida is the non-Federal sponsor for the project.

This report utilizes existing data gathered from a number of sources, including Collier County, USACE – Norfolk District, Bureau of Ocean Energy Management (BOEM) and private sector engineering firms.

1.1 AREA DESCRIPTION

The study area is defined as Collier County's jurisdictional boundaries and separated into two main areas. The Naples area consists of Vanderbilt, Park Shore, Naples beaches and the adjacent inlets. The second area consists of Marco Island. Collier County is located on the southwestern Florida coast, north of Everglades National Park and approximately 230 miles south of Orlando and 100 miles north of Key West. The population of Collier County in the 2010 Census was 321,520. The Naples area consists of approximately 17 miles of shoreline, while Marco Island consists of approximately 4 miles.

Figure 1-1. Project Area Map

The Naples project area (also referred to as the North County project area) consists of Vanderbilt, Park Shore, and Naples Beaches along with adjacent inland bay areas.

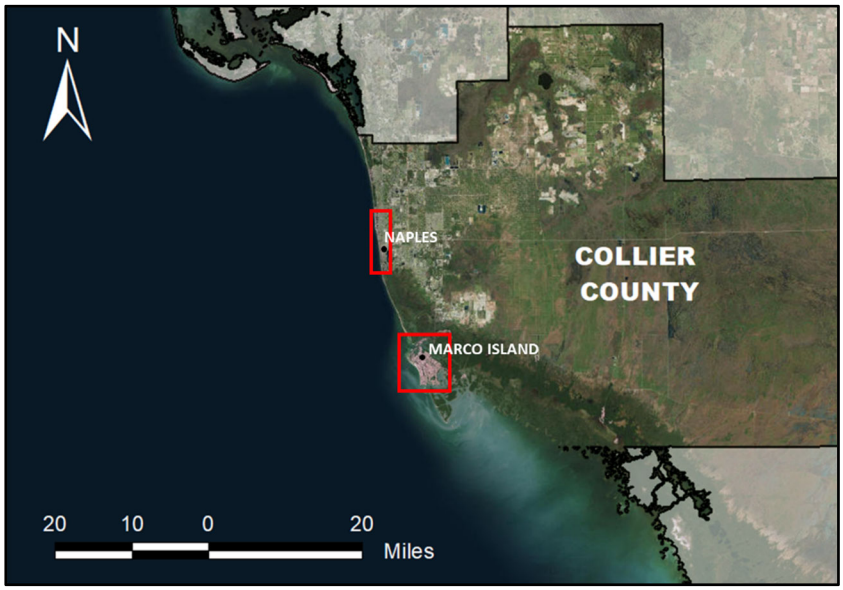

Figure 1-2. Main Areas Naples and Marco Island

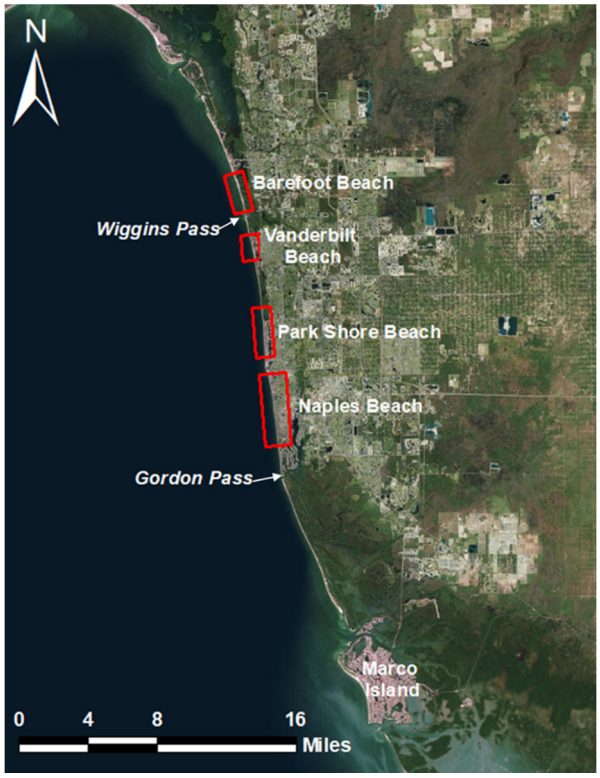

Figure 1-3. North County Beach locations

1.2 PREVIOUS GEOTECHNICAL STUDIES

Existing studies and data used for the analyses and recommendations in this sub-appendix are detailed in Chapter 5. Approximate boring layouts and boring logs are located in Appendix F. An idealized soil and bedrock profile was created based on review of the subsurface data is included in Appendix A.

CHAPTER 2 GEOLOGY, GROUND WATER AND SEISMICITY

2.1 REGIONAL GEOLOGY

The regional geology of Florida is governed by changing sea levels. Collier County is located within the Distal physiographic province. The province consists of late Triassic to early Jurassic mafic volcanic basement rocks at approximately 17,000 feet deep. Lower Cretaceous mesozoic rocks extend upwards towards to approximately 11,500 feet below mean seal level and is used for oil and gas production in Collier County. Cenozoic rocks above consist of over 5,00 feet of carbonates, followed by various formations of limestone.

Given the current limestone geology, the process of karstification is a major factor for structural stability in the area. Karstification is the dissolution of limestone by acids produced through a reaction with water. The dissolution of limestone forms voids that develop into sinkholes, caves, etc. throughout the limestone layer down to the bedrock. Some sandstone layers have been observed with the limestone. The major limestone formation in the region is the Miami Limestone however, the major formation of limestone in the project area is the Pliocene-age Tamiami Formation.

The sedimentary deposits have been characterized by the continued deposition of quartz sand with some clay and shell. The late Pleistocene-Holocene sands in Collier County make up a very thin layer at or near the surface. At the surface the Holocene sands are typically 20 feet thick but have been observed up to 40’ deep in some parts of the project area.

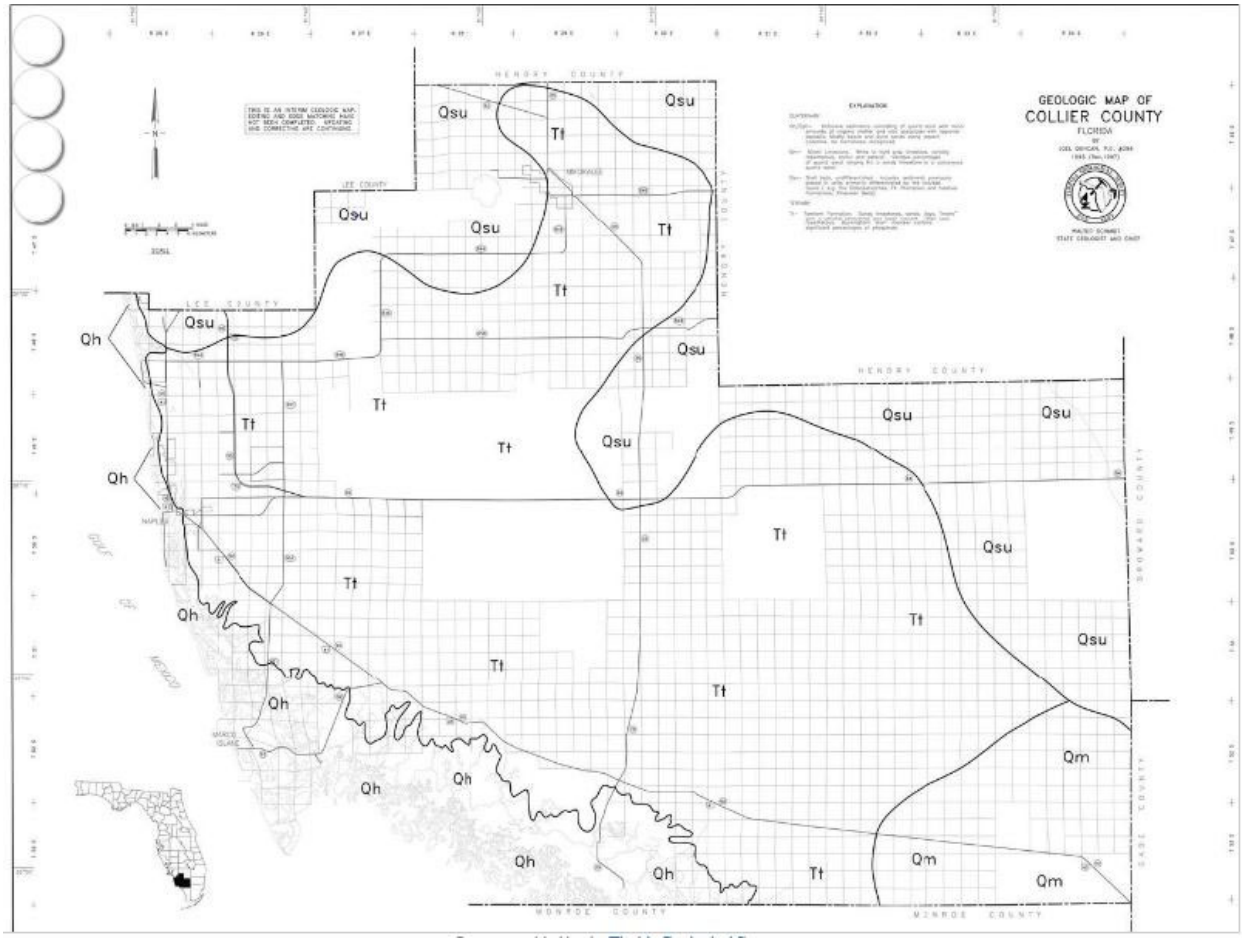

Figure 2-1. Quadrangle Map of Collier County

2.2 LOCAL GEOLOGY

The generalized geologic map units in the project region are listed below with descriptions typically summarized from geologic quadrangle maps.

Miami Limestone (Qm): Quaternary aged formation that is a grainstone to packstone, composed of ooids, pellets, skeletal grains and carbonate mud with a variable, but generally minor, quartz sand component. Miami limestone occurs on the mainland and in the southern Florida Keys from Big Pine Key to the Marquesas Keys. The formation consists of two facies, an oolitic facies and a bryozoan facies. The oolitic facies consists of white to orangish gray, poorly to moderately indurated, sandy, oolitic limestone (grainstone) with scattered concentrations of fossils. The bryozoan facies consists of white to orangish gray, poorly to well indurated, sandy, fossiliferous limestone (grainstone and packstone). Beds of quartz sand are also present as unindurated sediments and indurated limey sandstones. Fossils present include mollusks, bryozoans and corals. Molds and casts of fossils are common. Sand filled vertical joints and pinnacles are common where extensive weathering has occurred resulting in varied depths to rock surface below the surficial sediments.

Holocene sediments (Qh): The surficial deposits are mostly spread thinly along the County surface. Deeper areas extend between 20 to 40 feet in northern portions of the county and along the Ten Thousand Island. Deposits consist of quartz sand with trace amounts of clay and shell.

Shelly sediments (Qsu): Surficial sediments consists of Tertiary to Quaternary aged fossiliferous molluskbearing sediments. The sediments include quartz sands, carbonate sands and muds, and organics. The sediments are complex, varying from unconsolidated, variably calcareous and fossiliferous quartz sands to well indurated, sandy, fossiliferous limestones. Clayey sands and sandy clays are present.

Tamiami Formation (Tt): The Tamiami Formation is exposed throughout a large portion along the middle of the County and consists of moldic, sandy limestone. The formation thickness varies between 0 and 150 feet, extending 150 feet below the surface in the northern portion of the county near Lake Trafford.

2.3 TOPOGRAPHY AND DRAINAGE

The Coastal Plain is an area of low elevation and low relief characterized by narrow well drained ridges, broad poorly drained flats, and marine coastal areas. Coastal areas consist of marshes, beaches, and dunes. The formation and character of the coastal areas have been shaped not only by sea level rise and fall but also by torrential winds associated with hurricanes.

The natural terrain of Collier County is extremely flat with an average slope of one foot per mile or 0.0002%. With much of the area near sea level the drainage pattern is mostly sheet flow. The drainage pattern direction typically flows from the Northern part of the county towards the coast to the south and southwest.

2.4 GROUND WATER

Given the sandy geological conditions, most of the groundwater originated as surface water. During heavy periods of rain, the saturation zone level rises and saturates the vadose zone. This creates sunny day flooding where the precipitation cannot infiltrate. Near coast tidal areas are also effected high ground water levels during high tide.

2.4.1 REGIONAL GROUND WATER

Ground water in south Florida is contained in a series of highly transmissive but heterogenous aquifers. Due to the complex sedimentary history none of the aquifers or confining units extends over the entire region. The margins of the aquifers and confining units create a complex overlapping patchwork configuration. Ground water is recharged primarily by precipitation infiltration.

2.4.2 LOCAL GROUND WATER

There are three aquifers in the Collier County region. From upper to lower they are the surficial aquifer, the Intermediate aquifer and the Floridan aquifer.

The Surficial aquifer is divided into two units: the water table aquifer and lower Tamiami aquifer. The water table unit extends from the ground surface to a depth of 50 feet terminating near the Tamiami Formation. The lower Tamiami unit extends from the ground surface to a depth of 100 feet and occupies the Tamiami formation and upper Peace River Formation. Thicknesses for the unit range from 75 to 200 feet thick. The surficial aquifer is used for drinking water and typically within potable water standards.

The Intermediate aquifer is also divided into two units: the sandstone aquifer and the mid-Hawthorn aquifer. They consist of dolosilt, clay and limestone. The sandstone aquifer is relatively thin and discontinuous with depths varying from 100 to 250 feet below the ground surface. The sandstone aquifer is located in the northern part of the county. The mid-Hawthorn aquifer varies in depth from 200 to 400 feet below the ground surface and averages about 100 feet thick. The sandstone aquifer can be used for drinking water although the mid-Hawthorn aquifer typically shows high concentrations of sulfate and chloride and is typically used for agriculture.

The Floridan aquifer is separated by a confining layer of dense rock into Upper and Lower units. The water is typically brackish and is not used for drinking.

2.5 SEISMICITY

The seismic hazard in Collier County is low. Florida is not located near any tectonic plate boundaries resulting in rare occurrences of earthquakes. Five earthquakes have been recorded nearby in the last 30 years, either in Alabama or the Gulf of Mexico. The largest earthquake recorded since the development of seismographs occurred on 10 September 2006 in the Gulf of Mexico. The intraplate earthquake had a magnitude of 5.9 and the epicenter was located about 300 miles southwest of Collier County. The Florida Building Code (2017) and the International Building Code (2018) require seismic design considerations for structural designs. Given the low risk of a large magnitude earthquake occurring near the project area, the likelihood of a damaging tsunami is also low.

Table 1-1: Largest Historic Earthquakes near Collier County

Date	Location	Magnitude
March 31, 1992	Gulf of Mexico	3.8
April 18, 1997	Gulf of Mexico	3.9
May 4, 1997	Alabama	3.1
April 13, 2003	Gulf of Mexico	3.2
September 10, 2006	Gulf of Mexico	5.9

CHAPTER 3 EXISTING FLOOD RISK MANAGEMENT STRUCTURES

The only mapped flood risk management structure in the National Levee Database, within Collier County, is the L-29 Picayune Strand levee system. Although L-29 is within Collier County is it outside of the two study areas focused on within the County.

A seawall exists along the southern end of Marco Island near Caxambas Pass. The structure was originally built in 1958 and additional structures have been added to the area since based on the changing sediment transport. A rock revetment was placed adjacent to the seawall as well as groins and breakwaters to better manage the effects and shape the shoreline.

CHAPTER 4 STUDY MEASURES

4.1 GENERAL

Many measures were considered and evaluated as part of this CSRM study. All measures considered, and their evaluations, are documented in the main report. The following structural measures were carried forward for alternative development:

- Floodwall and Gates
- Storm Surge Barriers
- Berm and Dune Geometry Enhancement

For this project, depending on which water surface elevation is selected, the beach berm may need to be raised in elevation, widened perpendicular to the shoreline, or lengthened parallel to the shoreline, or a combination of those adjustments. This measure is discussed in detail in the Hydraulics, Hydrology, and Coastal Sub-Appendix and is not discussed further here. Preliminary designs for the measures are discussed in Section 6.

4.2 MEASURE INFORMARTION

For the location of specific measures, the PDT relied heavily on previous studies funded by Collier County. For floodwalls and berms/levees, once the overall alignments were determined, the alignments were divided into reaches based on measure type, geographic/neighborhood location, and similar ground surface elevation.

One of the measures being considered is a floodwall along Seagate Drive. The floodwall would start from the western end tied-in at the coast and proceed to just before West Boulevard. Two types of floodwalls were considered for this study; I-Walls and pile-supported T-Walls. I-Walls are cantilevered steel sheetpile walls with an above-ground concrete covering. T-Walls are concrete walls with a shallow concrete footing. Due to the presence of karst limestone formations limiting the driving ability of I-walls, T-walls were elected for design. To determine the floodwall height/type in a specific reach, the average ground surface elevation along the wall

alignment within the reach was subtracted from the top of wall elevation. The resulting wall height and type was used for the entire reach for cost estimating purposes. Determination of the top of wall elevation is documented in the Hydraulics, Hydrology, and Coastal Sub-Appendix.

Where floodwall alignments cross roadways, closeable gates would be utilized. Gates will be open most of the time and would only be closed when flooding is forecast for that portion of the County.

CHAPTER 5 EXISTING GEOTECHNICAL INFORMATION

5.1 GENERAL

This chapter provides an overview of the existing geotechnical information available for some locations where measures are proposed. No information was obtained for locations not listed below. An idealized soil profile was created based on the soil boring reports is presented Appendix A.

Due to the history of the beach nourishment and other projects that have changed the project area, the existing beach sands are difficult to define. According to a study performed in 2003, existing sands can be generally defined as light gray fine-grained sand with trace shells. Color, as defined according to the Munsell coloring system, is typically between 7 and 8 (5Y 7/1 to 5Y 8/1). Existing beach sand silt content composite values previously taken along the project area typically range from 0.53 to 4.65 percent. Mean grain size composite values taken along the project area typically range from 0.18 to 0.28 millimeters.

According to the recent renourishment contract from 2016, Collier County required a mean grain size of 0.33 millimeters for placed renourishment sands.

Selected vibracores in the project area (beginning at ELEV -27.1 feet) show approximately 4 to 17 feet of fine to medium-grained quartz sand with trace silt and shell fragments up to ¾ inches in diameter (SW-SM). Below the sand layers transitions to 2 to 14.5 feet of white carbonate clasts (GM).

5.2 WIGGINS PASS

Between 2009 and 2011, twenty two (22) vibracores were collected from Wiggins Pass. The vibracores extended to depths ranging from 8 to 22 feet deep. The vibracores show poorly to well graded sand (SP-SM, SM) quartz with trace silt, clay, organics, and shell wood fragments. Minor layers of clay or organic clay were shown occasionally between sand layers. Limestone was not observed during the sampling.

5.3 VANDERBILT BEACH ROAD

Subsurface data was reviewed from a previously proposed parking deck project near the proposed floodwall along Seagate Drive. Based on the seven Standard Penetration Testing (SPT) and classifications, the subsurface profile consisted of approximately 5 feet of loose to medium dense sand; followed by approximately 15 feet of weathered limestone with isolated limestone layers. The remaining profile consisted of weathered limestone increasing in density with depth. Average blow counts for the sand layer were approximately 10 blows per foot while the limestone layer averaged approximately 20 blows per foot. Borings extended to sixty feet below existing grade with groundwater levels ranged between 4 to 5 feet below existing grade. Limestone depths were observed at approximately 17 feet below existing grade.

5.4 NAPLES AIRPORT

Subsurface data was reviewed for a runway drainage improvement project at the Naples airport. Based off the ten SPTs, the typical subsurface profile reflected similarly with the results from the Vanderbilt Beach Road project. In addition to SPT testing, rising head testing permeability values were observed at approximately 5' below ground surface and ranged from approximately 6 to 13 feet per day. Permeability testing was performed on the sand layer. Average blow counts for the sand layer ranged between 10 and 23 blows per foot. Although core samples were not tested and very few were recovered, blow counts typically averaged 50 plus blows per foot in the limestone layer. The groundwater table was encountered at depths ranging from 1 to 3 feet below the existing grade.

5.5 TAMIAMI TRAIL NORTH

Subsurface data was reviewed for a proposed shopping center along the 4000 block of Tamiami Trail North in Naples. Four SPTs were performed to a depth of 20 feet below existing grade. Although the site had been previously disturbed most of the surficial soils up to 20 feet below ground surface showed fine sand with varying amounts of silt. Average blow counts were approximately 13 blows per foot. The groundwater table was encountered at depths ranging from 4 to 8 feet below the existing grade.

CHAPTER 6 GEOTECHNICAL ASPECTS OF FEASIBILTY STUDY MEASURES

This chapter discusses the geotechnical design that was conducted for the measures recommended in the Collier County CSRM Feasibility Study. Due to the large size of the study area and the time and funding constraints imposed by the Corps Smart Planning process, the design level in this study is considered to be 10 percent. This chapter also discusses the further data collection and analyses that would be performed during the Planning, Engineering, and Design (PED) phase of the project.

6.1 FLOODWALL DESIGN

6.1.1 GENERALIZED SUBSURFACE PROFILE

Local subsurface investigations were reviewed to produce a generalized subsurface profile. From the ground surface to approximately 5 feet below ground surface showed loose to medium dense sand with silt. Below the sand layer to approximately 20 feet below grade showed weathered limestone with few isolated limestone layers. The blow counts for the weathered limestone continues to increase with depth beyond 20 feet below grade to termination at 60 feet below grade.

Blow counts from Standard Penetrometer Testing (SPT) for the sand layer averaged 7 with the while the weathered limestone stratums average ranged from 10 to 20.

6.1.2 T-WALL DESIGN

Floodwalls are typically constructed using either an I-wall or T-wall foundation. An I-wall is a cantilevered steel sheet pile with a concrete cover above ground while a T-wall is a concrete stem wall with a concrete footing typically supported by piles. Given the karst limestone near the surface throughout the study area driving a sheetpile for an I-wall foundation would be difficult and therefore cost ineffective.

Due to the karst geology and groundwater levels throughout the state of Florida certain foundation design methods are preferred. Auger cast piles were recommended as the preferred method of support for the T-wall foundation.

6.1.2.1 Pile Capacity

Preliminary design loads (81.5 kips vertical, 13.4 kips lateral) were provided by the study Structural Engineer. Auger cast piles of various diameters were analyzed for skin friction and bearing capacities. Pile capacity tables are available for review in Appendix B of this report. Hand calculations for the design can be found in Appendix C. Additionally, an idealized soil profile based on review of the existing geotechnical information was developed for use in the pile capacity tables and lateral capacity analyses. The idealized soil profile is in Appendix A and the individual boring logs are in Appendix F.

An allowable end bearing capacity of 2.0 kips per square foot (ksf) and an allowable skin friction capacity of 2.3 ksf can be utilized for the design of auger cast piles extended into bedrock in accordance with the available geotechnical data and FHWA Geotechnical Engineering Circular No. 8 – "Design and Construction of Continuous Flight Auger Piles", 2007. Neglect end bearing if the bottom of the socket cannot be inspected and percussion or pilot test holes are not utilized to a minimum of ten feet below the bearing elevation.

Lateral pile capacity was determined using L-Pile. Generally, the axial pile capacity controls the pile design in terms of both length and diameter. Maximum bending moments were determined

for one inch of deflection for various width 20-feet long piles. Bending moment charts at a maximum of one inch of deflection are included in Appendix D.

6.1.2.2 Seepage Analysis

Due to the porous geology encountered in the study area, seepage analyses should be completed to determine the amount of tidally influenced flow beneath the proposed floodwall.

Using the geologic and hydraulic transient loading conditions, the peak estimated flow per linear foot of wall and approximate depth of water accumulating within the protected area should be determined. Both of these parameters will vary dependent on the duration of the hydraulic loading and site topography.

The design team should take into consideration the increased amount of flow into the protected area due to seepage when designing the pump station capacity and the associated economic impacts of potential additional damage.

6.1.2.3 Uplift Pressure

It is anticipated that a minimum of a 10-foot deep cutoff wall will be required at the waterside footing toe to reduce uplift pressure. The slurry wall backfill material will be Cement-Bentonite (CB), also known as self-hardening slurry. A trench is excavated through a slurry that consists of water, bentonite and cement. The trench slurry hardens in place, typically overnight, and serves as a low-permeability cutoff wall. Estimated maximum uplift can be expected to be around 1500 pounds per square foot.

6.1.2.4 Future Design Activities

During the PED phase, subsurface explorations will be conducted along the T-wall alignments to supplement existing information. Information from the subsurface explorations will be used to develop site-specific subsurface cross sections for axial and lateral load capacity, settlement, seepage and footing uplift pressure. The Structural Engineer may provide updated pile loadings (axial and lateral) based on more detailed structural analysis. At locations where fill exists, the effect of downdrag will be evaluated, if necessary.

6.2 SAND SOURCES

6.2.1 GENERAL

Sand sources for beach re-nourishment will typically come from either off shore dredging or local quarries and mines. Due to the high volume of sand needed, a combination off shore and inland may need to be utilized during construction. The following paragraphs represent possible known alternatives for sand sources. The re-nourishment sand can be expected to be similar to the following specifications:

- Maximum Shell Content: 1% retained on the No. 4 sieve

- Munsell Color Value: Moist Value (Chroma = 1) of 7 or lighter
- Median grain size: 0.33 millimeters

Note: These values may change based on possible available sources and/or sponsor preference.

According to the recent re-nourishment contract from 2016, Collier County required a mean grain size of 0.33 millimeters for placed re-nourishment sands. A Quality Assurance/Quality Control (QA/QC) program will be provided throughout construction to verify the fill material placed at re-nourishment areas. See Section 7.3 for more detail.

6.2.2 OFF SHORE SAND SOURCES

Off shore fill material is dredged from the ocean floor and then pumped or transported by barge to the re-nourishment area. BOEM is currently leasing two off shore locations (Borrow Areas T-1 and T-2); one of which is currently being used by Collier County for beach re-nourishment. Maps for the offshore borrow areas can be found in Appendix E.

6.2.3 INLAND SOURCES

Inland sources excavate fill material from local quarries or mines within the area. The fill material is then transported directly to the re-nourishment area. Possible inland sources include:

- Witherspoon Mine
- Ortana Mine
- Immokalee Mine
- Garcia Sand Mine
- SDI (Atlantic Civil, Inc.) Mine

Inland sources will be required to submit material gradation and munsell color value for approval.

6.3 STORM SURGE BARRIERS

Surge barriers are proposed at locations where tidal and storm surges impact the back bay areas and nearby roadways. Approximate surge barrier locations are shown in the main report. One surge barrier is proposed along Wiggins Pass westward of Vanderbilt Road. Additionally, another surge barrier is proposed along Doctors Pass to protect the surrounding back bay areas.

The surge barriers are anticipated to include, or consist of a combination of, sector gates (large openings), miter gates (small openings) and tide gates with associated floodwalls. It is anticipated that the surge barriers and appurtenant structures will require an auger cast pile

foundation system for axial and lateral support. The sector structure will likely consist of two metal rotating sector gates attached to reinforced concrete abutments. Sector gates will be supported by an auger cast pile system socketed into bedrock. It is anticipated the sector gates will be left open most of the time to allow water exchange and small boat traffic and will only be closed during major storm events to prevent storm surge water. Miter gates may also be utilized at areas with smaller openings. Tide gates may be utilized where small creeks and storm drainage outlets cross the floodwall alignments.

6.3.1 FUTURE DESIGN ACTIVITY

During the PED phase, subsurface explorations will be conducted over water from a barge along the surge barrier alignments where needed to supplement existing data. Explorations for tide gate design will likely be conducted on land adjacent to the proposed gate location. All geotechnical explorations will be used to develop site-specific cross sections to design the barriers. It is anticipated that all piles will be auger cast-in-place type and be rock socketed. Pile design for sector gates will include evaluations of axial capacity, lateral load capacity and deflection, settlement and, where applicable, downdrag. The Structural Engineer will provide updated pile loads based on a more detailed structural analysis. The number and length of sector gate piles may change from what was assumed during this study. Pile length for the appurtenant structures (floodwalls and pump stations) may change based on the additional explorations. The axial capacity charts in Appendix B can be used for appurtenant structures for estimating purposes.

CHAPTER 7 CONSTRUCTABILITY

The primary constructability issues for the Collier county CSRM project are expected to be construction adjacent to existing structures, sediment control plans, hard bottom, traffic and tourism impacts. These issues are discussed individually in this chapter.

7.1 CONSTRUCTION ADJACENT TO EXISTING STRUCTURES

Auger Cast-in-Place (ACIP) piles could be detrimental to the existing structures if installed in proximity to shallow foundations. The installation of ACIP piles tends to remove subsurface soil that could result in the undermining of the existing structure shallow foundations. The installation process of an ACIP pile causes loosening of the pile shaft sidewalls during augering; therefore, the installation of ACIP piles adjacent to existing shallow foundations bearing on granular soils may produce undesired settlements to nearby footings. To prevent unwanted damage to existing footings, preventive measures should be taken for ACIP piles installed within 15 feet of existing footings. Methods typically used to prevent damage to existing foundations include stabilization by means of jet grouting or chemical grouting, cutoff curtain walls around pile installation to contain ground softening caused by the augering process or underpinning of the existing shallow foundations. In either case, the existing structures and/or foundations shall be closely monitored for movement by the geotechnical engineer of record.

Additionally, vibration monitoring during ACIP construction will not be required as opposed to conventional driven piles. However, other activities such as concrete/asphalt demolition, compaction with a vibratory compactor, and excavation can possibly produce vibrations that do

not dissipate until about 60-70 feet. If any of those activities or similar activities will be conducted within 70 feet of existing structures to remain, then vibration monitoring will be needed.

Construction adjacent to existing structures also means that the temporary construction right-of-way must be minimized. Construction in tight quarters tends to take longer, which increases costs, and may be more dangerous for the workers.

7.2 MAN-MADE FILL MATERIALS

Significant amounts of man-made fill materials exist within the project footprint. Many of these fills were placed along the various waterways to raise grades and provide additional land for development. Older man-made fill materials are generally minimally compacted and consist of whatever material was available at the time, which can include trash and debris. Older man-made fills can cause excessive settlement of structures with shallow foundations due to inadequate compaction and large pieces of debris can make excavation and pile installation difficult. Project floodwalls will be on pile foundations. Obstructions encountered during pile installation will be evaluated on a case-by-case basis.

7.3 QA/QC PLAN

A QA/QC plan will be developed with Collier County to ensure the proposed sand placed on the beaches will be acceptable. The existing beach sand will be sampled and characterized in order to create sediment compliance specifications. The proposed re-nourishment sand will be test to verify it meets specifications. – Source CB&I CPE pgs 28-30.

7.4 HARD BOTTOM IMPACTS

Hard bottom impacts refer to the large sensitive ecosystem along the ocean floor adjacent to the project shoreline. Significant attention should be devoted to the elimination and monitoring of hard bottom impacts during on-going construction activities. It is recommended hard bottom mapping be conducted prior to construction. For more information on soil migration mapping, depth of closure and hard bottom delineation see the Hydraulics, Hydrology, and Coastal Sub-Appendix.

7.5 TURBIDITY MONTORING

High turbidity levels can have negative impacts on the surrounding ecosystem. A monitoring plan should be in place to measure the acceptable level of Total Suspended Solids (TSS). For more information on soil migration mapping and turbidity monitoring see the Hydraulics, Hydrology, and Coastal Sub-Appendix.

7.6 TRAFFIC AND TOURISM IMPACTS

Beach re-nourishment along recommended reaches should be planned accordingly to minimize the negative impact on county tourism revenue. Construction near and along/across roadways

will negatively impact traffic and may require temporary street or lane closures and traffic monitors. The construction contractor will need an extensive traffic control plan and will have to perform extensive coordination with the City to provide public notice of traffic impacts.

CHAPTER 8 **REFERENCES**

Collier County Local Hydrology. Accessed October 2019. https://www.colliercountyfl.gov/your-government/divisions-s-z/stormwater-management/general-information/local-hydrology#topography

Knapp, M.S., Burns, W.S., and Sharp, T.S., 1986, Preliminary assessment of the groundwater resources of western Collier County, Florida: South Florida Water Management District Technical Publication 86-1.

Florida's Geological History, Bostick, Kyle. Accessed October 2019. https://edis.ifas.ufl.edu/uw208

Karst Features and Hydrogeology in West-central Florida, US Geological Survey. Accessed September 2019. https://water.usgs.gov/ogw/karst/kigconference/abt_karstfeatures.htm

FHWA GEC No. 8, Design and Constrution of Continuous Flight Auger Piles, 2007

FHWA Drilled Shafts: Construction Procedures and LRFD Design Methods, 2010

Frizzy, Meyer, Auger Cast Piles, South Florida Experience, 2000

Naples Airport Runway 14-32, GFA International, 2014.

Park Shore Shopping Center Tamiami Trail North, Professional Service Industries, Inc., 2017.

Proposed Vanderbilt Beach Parking Garage, Walker Parking Consultants, 2007.

USACE EM 1110-2-2906, Design of Pile Foundations, 15 January 1991

USACE EM 1110-2-1901, Seepage Analysis and Control for Dams, 30 September 1986.

USACE EM 1110-2-2502, Design of Retaining and Flood Walls, 29 September 1989.

USACE EM 1110-2-1614, Design of Seawalls Coastal.

Wiggins Pass Appendix No. 27 Geophysical Review, JCP, 2011.

APPENDIX GEO-A: IDEALIZED SOIL PROFILE

TYPICAL SUBSURFACE PROFILE		COLLIER CSRM. T. ELDER

0

SAND WITH SILT AND POSSIBLE ORGANICS
LOOSE TO MEDIUM AVG BC = 7

GW ▽

5'

WEATHERED LIMESTONE
W/ FEW THIN ISOLATED LIMESTONE LAYERS

AVG BC = 10

20'

WEATHERED LIMESTONE
INCREASE STRENGTH W/ DEPTH

AVG BC = 20

60'

SIDE RESISTANCE / END BEARING	UPLIFT	COLUMN. CSRM T-TOWER

SIDE RESISTANCE

FRIZZI AND MEYER (2000)
FROM "DESIGN & CONSTRUCTION OF AUGER CAST PILES"
GEOTECH ENG CIRCULAR No. 8
FHWA-HIF-07-03 pg. 77

USING N = 60, SIDE STRESS = 5 tons/ft²
= 10 kips/ft²

$\frac{10\ ksf}{3} = \boxed{3333\ psf}$

NEGLECT OVERBURDEN + DOWNDRAG FOR PRELIMINARY DESIGN!

END BEARING

FROM FHWA-HIF-07-03 EQN 5.20a

$Q_{ult\ EB} = 0.6\ N\ (ksf)$ (COHESIONLESS SOIL

1.5 of 3 (ASD)

$= 0.6(20) = 12\ ksf$

$12\ ksf \frac{0.5\ ksf}{1\ ksf} = 6\ ksf$

$Q_{EB\ ALLOW} = \frac{6\ ksf}{3} = \boxed{2\ ksf}$

UPLIFT

$f_{max} = \psi \cdot f_{max\ (compression)}$

FHWA DRILLED SHAFTS EQN 11.30
HF 99-025

$\psi = 0.7$ INTERMEDIATE GEOMATERIALS (IGM)
0.75 COHESIONLESS SOIL

$f_{max} = 0.75(2.0) = 1.5\ ksf$

APPENDIX GEO-B: AXIAL CAPACITY CHARTS

Rock Socket Diameter = 1.5 feet
Rock Socket Diameter = 18 inches

Nominal Unit Side Shear = 7.0 ksf
Nominal Unit End Bearing = 6.0 ksf
Nominal Unit Uplift Resistance = 4.2 ksf

Depth Below Casing (ft.)	Nominal Side Resistance (kips)	Nominal End Bearing Resistance (kips)	Nominal Uplift Resistance (kips)	Factored Side Resistance (kips)	Factored End Bearing Resistance (kips)	Total Factored Axial Resistance (kips)	Total Factored Uplift Resistance (kips)
0.0	-	-	-	-	-	-	-
1.0	-	-	-	-	-	-	-
2.0	-	-	-	-	-	-	-
3.0	49	10.6	35	16	4	20	12
4.0	82	10.6	58	27	4	31	19
5.0	115	10.6	81	38	4	42	27
6.0	148	10.6	104	49	4	53	35
7.0	181	10.6	127	60	4	64	42
8.0	214	10.6	150	71	4	75	50
9.0	247	10.6	173	82	4	86	58
10.0	280	10.6	196	93	4	97	65
11.0	313	10.6	219	104	4	108	73
12.0	346	10.6	242	115	4	119	81
13.0	379	10.6	266	126	4	130	89
14.0	412	10.6	289	137	4	141	96
15.0	445	10.6	312	148	4	152	104
16.0	478	10.6	335	159	4	163	112
17.0	511	10.6	358	170	4	174	119
18.0	544	10.6	381	181	4	185	127
19.0	577	10.6	404	192	4	196	135
20.0	610	10.6	427	203	4	207	142

<<<<<< Minimum Socket Depth Below Casing

FACTORS OF SAFETY 3.0

*Minimum Socket Length = 1.5 x Dia. 2.25 ft

Neglect contribution of upper one diameter of shaft for axial resistance (already accounted for in table)

FHWA - Geotechncial Engineering Circular (GEC) No. 8 - "Design and Construction of Continuous Flight Auger Piles", 2007

Frizzi, Meyer, Auger Cast Piles - "South Florida Experience", 2000

Lateral Loads may govern ACP depths

Designer should consider neglecting end bearing if bottom of shaft can not be inspected
Pilot holes (2" diameter) can also be drilled at least 10' below the pile tip to the verify the end bearing

Rock Socket Diameter = 2 feet
Rock Socket Diameter = 24 inches

Nominal Unit Side Shear = 7.0 ksf
Nominal Unit End Bearing = 6.0 ksf
Nominal Unit Uplift Resistance = 4.2 ksf

Depth Below Casing (ft.)	Nominal Side Resistance (kips)	Nominal End Bearing Resistance (kips)	Nominal Uplift Resistance (kips)	Factored Side Resistance (kips)	Factored End Bearing Resistance (kips)	Total Factored Axial Resistance (kips)	Total Factored Uplift Resistance (kips)
0.0	-	-	-	-	-	-	-
1.0	-	-	-	-	-	-	-
2.0	-	-	-	-	-	-	-
3.0	44	18.8	31	15	6	21	10
4.0	88	18.8	62	29	6	36	21
5.0	132	18.8	92	44	6	50	31
6.0	176	18.8	123	59	6	65	41
7.0	220	18.8	154	73	6	80	51
8.0	264	18.8	185	88	6	94	62
9.0	308	18.8	216	103	6	109	72
10.0	352	18.8	246	117	6	124	82
11.0	396	18.8	277	132	6	138	92
12.0	440	18.8	308	147	6	153	103
13.0	484	18.8	339	161	6	168	113
14.0	528	18.8	369	176	6	182	123
15.0	572	18.8	400	191	6	197	133
16.0	616	18.8	431	205	6	212	144
17.0	660	18.8	462	220	6	226	154
18.0	704	18.8	493	235	6	241	164
19.0	748	18.8	523	249	6	256	174
20.0	792	18.8	554	264	6	270	185

<<<<<< Minimum Socket Depth Below Casing

FACTORS OF SAFETY 3.0

*Minimum Socket Length = 1.5 x Dia. 3.0 ft

Neglect contribution of upper one diameter of shaft for axial resistance (already accounted for in table)

FHWA - Geotechncial Engineering Circular (GEC) No. 8 - "Design and Construction of Continuous Flight Auger Piles", 2007

Frizzi, Meyer, Auger Cast Piles - "South Florida Experience", 2000

Lateral Loads may govern ACP depths

Designer should consider neglecting end bearing if bottom of shaft can not be inspected
Pilot holes (2" diameter) can also be drilled at least 10' below the pile tip to the verify the end bearing

Rock Socket Diameter = 2.5 feet
Rock Socket Diameter = 30 inches

Nominal Unit Side Shear = 7.0 ksf
Nominal Unit End Bearing = 6.0 ksf
Nominal Unit Uplift Resistance = 4.2 ksf

Depth Below Casing (ft.)	Nominal Side Resistance (kips)	Nominal End Bearing Resistance (kips)	Nominal Uplift Resistance (kips)	Factored Side Resistance (kips)	Factored End Bearing Resistance (kips)	Total Factored Axial Resistance (kips)	Total Factored Uplift Resistance (kips)
0.0	-	-	-	-	-	-	-
1.0	-	-	-	-	-	-	-
2.0	-	-	-	-	-	-	-
3.0	27	29.5	19	9	10	19	6
4.0	82	29.5	58	27	10	37	19
5.0	137	29.5	96	46	10	56	32
6.0	192	29.5	135	64	10	74	45
7.0	247	29.5	173	82	10	92	58
8.0	302	29.5	212	101	10	111	71
9.0	357	29.5	250	119	10	129	83
10.0	412	29.5	289	137	10	147	96
11.0	467	29.5	327	156	10	166	109
12.0	522	29.5	366	174	10	184	122
13.0	577	29.5	404	192	10	202	135
14.0	632	29.5	443	211	10	221	148
15.0	687	29.5	481	229	10	239	160
16.0	742	29.5	520	247	10	257	173
17.0	797	29.5	558	266	10	276	186
18.0	852	29.5	597	284	10	294	199
19.0	907	29.5	635	302	10	312	212
20.0	962	29.5	673	321	10	331	224

<<<<<< Minimum Socket Depth Below Casing

FACTORS OF SAFETY 3.0

*Minimum Socket Length = 1.5 x Dia. 3.75 ft

Neglect contribution of upper one diameter of shaft for axial resistance (already accounted for in table)

FHWA - Geotechncial Engineering Circular (GEC) No. 8 - "Design and Construction of Continuous Flight Auger Piles", 2007

Frizzi, Meyer, Auger Cast Piles - "South Florida Experience", 2000

Lateral Loads may govern ACP depths

Designer should consider neglecting end bearing if bottom of shaft can not be inspected
Pilot holes (2" diameter) can also be drilled at least 10' below the pile tip to the verify the end bearing

Rock Socket Diameter = 3.0 feet
Rock Socket Diameter = 36 inches

Nominal Unit Side Shear = 7.0 ksf
Nominal Unit End Bearing = 6.0 ksf
Nominal Unit Uplift Resistance = 4.2 ksf

Depth Below Casing (ft.)	Nominal Side Resistance (kips)	Nominal End Bearing Resistance (kips)	Nominal Uplift Resistance (kips)	Factored Side Resistance (kips)	Factored End Bearing Resistance (kips)	Total Factored Axial Resistance (kips)	Total Factored Uplift Resistance (kips)
0.0	-	-	-	-	-	-	-
1.0	-	-	-	-	-	-	-
2.0	-	-	-	-	-	-	-
3.0	-	-	-	-	-	-	-
4.0	66	42.4	46	22	14	36	15
5.0	132	42.4	92	44	14	58	31
6.0	198	42.4	139	66	14	80	46
7.0	264	42.4	185	88	14	102	62
8.0	330	42.4	231	110	14	124	77
9.0	396	42.4	277	132	14	146	92
10.0	462	42.4	323	154	14	168	108
11.0	528	42.4	369	176	14	190	123
12.0	594	42.4	416	198	14	212	139
13.0	660	42.4	462	220	14	234	154
14.0	726	42.4	508	242	14	256	169
15.0	792	42.4	554	264	14	278	185
16.0	858	42.4	600	286	14	300	200
17.0	924	42.4	647	308	14	322	216
18.0	990	42.4	693	330	14	344	231
19.0	1056	42.4	739	352	14	366	246
20.0	1122	42.4	785	374	14	388	262

<<<<<< Minimum Socket Depth Below Casing

FACTORS OF SAFETY 3.0

*Minimum Socket Length = 1.5 x Dia. 4.5 ft

Neglect contribution of upper one diameter of shaft for axial resistance (already accounted for in table)

FHWA - Geotechncial Engineering Circular (GEC) No. 8 - "Design and Construction of Continuous Flight Auger Piles", 2007

Frizzi, Meyer, Auger Cast Piles - "South Florida Experience", 2000

Lateral Loads may govern ACP depths

Designer should consider neglecting end bearing if bottom of shaft can not be inspected
Pilot holes (2" diameter) can also be drilled at least 10' below the pile tip to the verify the end bearing

Rock Socket Diameter = 3.5 feet
Rock Socket Diameter = 42 inches

Nominal Unit Side Shear = 7.0 ksf
Nominal Unit End Bearing = 6.0 ksf
Nominal Unit Uplift Resistance = 4.2 ksf

Depth Below Casing (ft.)	Nominal Side Resistance (kips)	Nominal End Bearing Resistance (kips)	Nominal Uplift Resistance (kips)	Factored Side Resistance (kips)	Factored End Bearing Resistance (kips)	Total Factored Axial Resistance (kips)	Total Factored Uplift Resistance (kips)
0.0	-	-	-	-	-	-	-
1.0	-	-	-	-	-	-	-
2.0	-	-	-	-	-	-	-
3.0	-	-	-	-	-	-	-
4.0	38	57.7	27	13	19	32	9
5.0	115	57.7	81	38	19	58	27
6.0	192	57.7	135	64	19	83	45
7.0	269	57.7	189	90	19	109	63
8.0	346	57.7	242	115	19	135	81
9.0	423	57.7	296	141	19	160	99
10.0	500	57.7	350	167	19	186	117
11.0	577	57.7	404	192	19	212	135
12.0	654	57.7	458	218	19	237	153
13.0	731	57.7	512	244	19	263	171
14.0	808	57.7	566	269	19	289	189
15.0	885	57.7	620	295	19	314	207
16.0	962	57.7	673	321	19	340	224
17.0	1039	57.7	727	346	19	366	242
18.0	1116	57.7	781	372	19	391	260
19.0	1193	57.7	835	398	19	417	278
20.0	1270	57.7	889	423	19	443	296

<<<<<< Minimum Socket Depth Below Casing

FACTORS OF SAFETY 3.0

*Minimum Socket Length = 1.5 x Dia. 5.25 ft

Neglect contribution of upper one diameter of shaft for axial resistance (already accounted for in table)

FHWA - Geotechncial Engineering Circular (GEC) No. 8 - "Design and Construction of Continuous Flight Auger Piles", 2007

Frizzi, Meyer, Auger Cast Piles - "South Florida Experience", 2000

Lateral Loads may govern ACP depths

Designer should consider neglecting end bearing if bottom of shaft can not be inspected
Pilot holes (2" diameter) can also be drilled at least 10' below the pile tip to the verify the end bearing

Rock Socket Diameter = 4.0 feet
Rock Socket Diameter = 48 inches

Nominal Unit Side Shear = 7.0 ksf
Nominal Unit End Bearing = 6.0 ksf
Nominal Unit Uplift Resistance = 4.2 ksf

Depth Below Casing (ft.)	Nominal Side Resistance (kips)	Nominal End Bearing Resistance (kips)	Nominal Uplift Resistance (kips)	Factored Side Resistance (kips)	Factored End Bearing Resistance (kips)	Total Factored Axial Resistance (kips)	Total Factored Uplift Resistance (kips)	
0.0	-	-	-	-	-	-	-	
1.0	-	-	-	-	-	-	-	
2.0	-	-	-	-	-	-	-	
3.0	-	-	-	-	-	-	-	
4.0	-	-	-	-	-	-	-	
5.0	88	75.4	62	29	25	54	21	
6.0	176	75.4	123	59	25	84	41	<<<<<< Minimum Socket Depth Below Casing
7.0	264	75.4	185	88	25	113	62	
8.0	352	75.4	246	117	25	142	82	
9.0	440	75.4	308	147	25	172	103	
10.0	528	75.4	369	176	25	201	123	
11.0	616	75.4	431	205	25	230	144	
12.0	704	75.4	493	235	25	260	164	
13.0	792	75.4	554	264	25	289	185	
14.0	880	75.4	616	293	25	318	205	
15.0	968	75.4	677	323	25	348	226	
16.0	1056	75.4	739	352	25	377	246	
17.0	1144	75.4	800	381	25	406	267	
18.0	1232	75.4	862	411	25	436	287	
19.0	1319	75.4	924	440	25	465	308	
20.0	1407	75.4	985	469	25	494	328	

FACTORS OF SAFETY 3.0

*Minimum Socket Length = 1.5 x Dia. 6 ft

Neglect contribution of upper one diameter of shaft for axial resistance (already accounted for in table)

FHWA - Geotechncial Engineering Circular (GEC) No. 8 - "Design and Construction of Continuous Flight Auger Piles", 2007

Frizzi, Meyer, Auger Cast Piles - "South Florida Experience", 2000

Lateral Loads may govern ACP depths

Designer should consider neglecting end bearing if bottom of shaft can not be inspected
Pilot holes (2" diameter) can also be drilled at least 10' below the pile tip to the verify the end bearing

APPENDIX GEO-C: PILE CAPACITY HAND CALCULATIONS

SIDE RESISTANCE / END BEARING	UPLIFT	COLUMN CSRM T-TOWER

SIDE RESISTANCE

FRIZZI AND MEYER (2000)
FROM "DESIGN & CONSTRUCTION OF AUGER CAST PILES"
GEOTECH ENG CIRCULAR No. 8
FHWA-HIF-07-03 pg. 77

USING N = 60, SIDE SHEAR = 5 TONS/ft² = 10 KIPS/ft²

Corrected to: 3.5 Tons/sf

7 Kips/sf

$\frac{10\ KSF}{3} = \boxed{3333\ psf}$

2333 psf

NEGLECT OVERBURDEN & DOWNDRAG FOR PRELIMINARY DESIGN!

END BEARING

FROM FHWA-HIF-07-03 EQN 5.20a

$Q_{ult\ EB} = 0.6\ N\ (ksf)$ (COHESIONLESS SOIL

1.5 of 3 (ASD)

$= 0.6(20) = 12\ ksf$

$12\ ksf \frac{0.5\ ksf}{1\ ksf} = 6\ ksf$

$Q_{EB\ ALLOW} = \frac{6\ ksf}{3} = \boxed{2\ ksf}$

UPLIFT

$f_{max} = \psi \cdot f_{max\ (compression)}$

FHWA DRILLED SHAFTS EQN 11.30
HF 99-025

$\psi = 0.7$ INTERMEDIATE GEOMATERIALS (IGM)
0.75 COHESIONLESS SOIL

$f_{max} = 0.75(2.0) = 1.5\ ksf$

APPENDIX GEO-D: LPILE

Collier County CSRM
Pile Diameter = 18 inches
Pile Length = 20 feet
Lateral Deflection vs. Depth

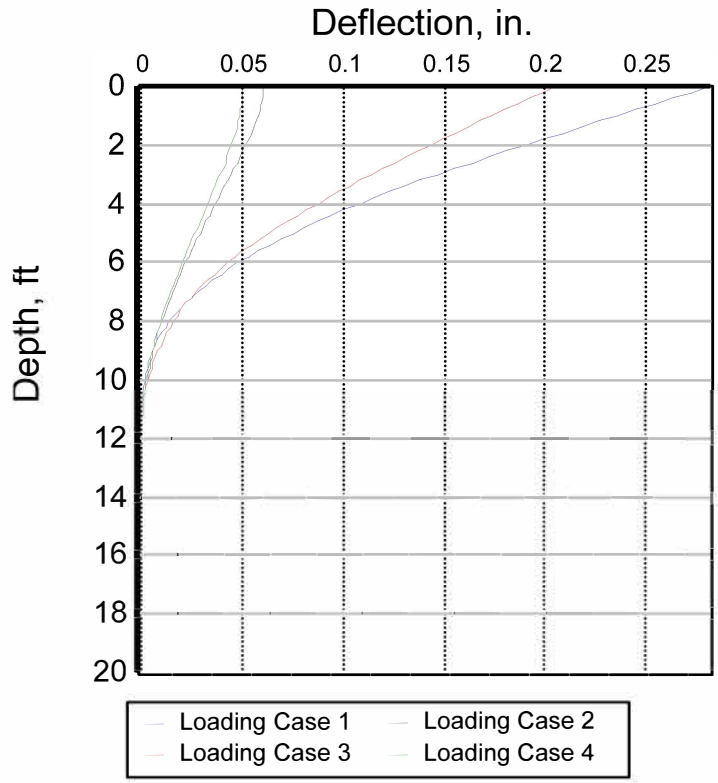

LPile 2016.9.02, © 2016 by Ensoft, Inc.

LOAD CASE 1: **No Axial Load, Free End, 25 kip lateral load**

LOAD CASE 2: **No Axial Load, Fixed End, 25 kip lateral load**

LOAD CASE 3: **152 kip Axial Load, Free End, 25 kip lateral load**

LOAD CASE 4: **152 kip Axial Load, Fixed End, 25 kip lateral load**

Collier County CSRM
Pile Diameter = 18 inches
Pile Length = 20 feet
Bending Moment vs. Depth

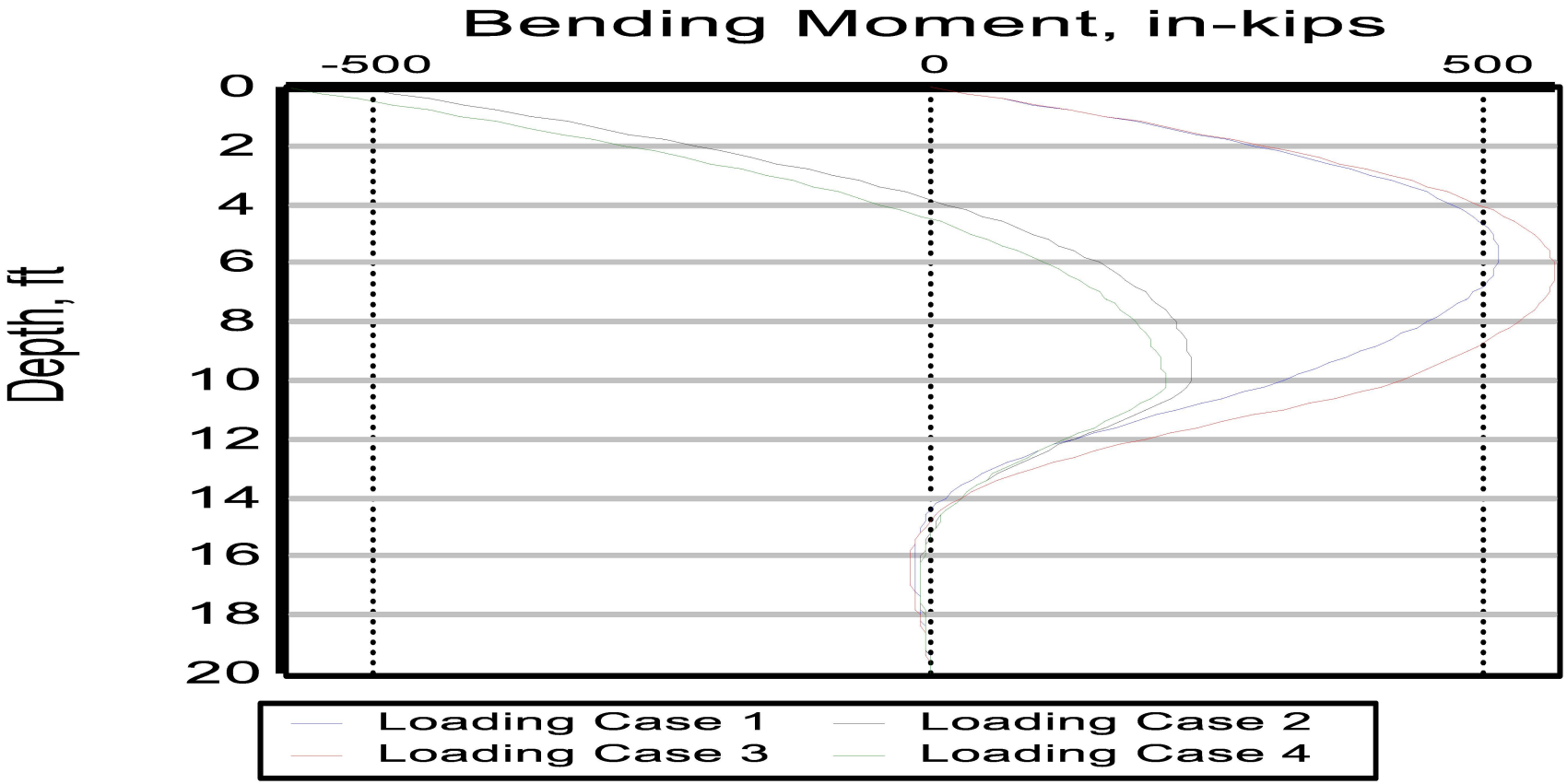

LPile 2016.9.02, © 2016 by Ensoft, Inc.

Collier County CSRM
Pile Diameter = 24 inches
Pile Length = 20 feet
Lateral Deflection vs. Depth

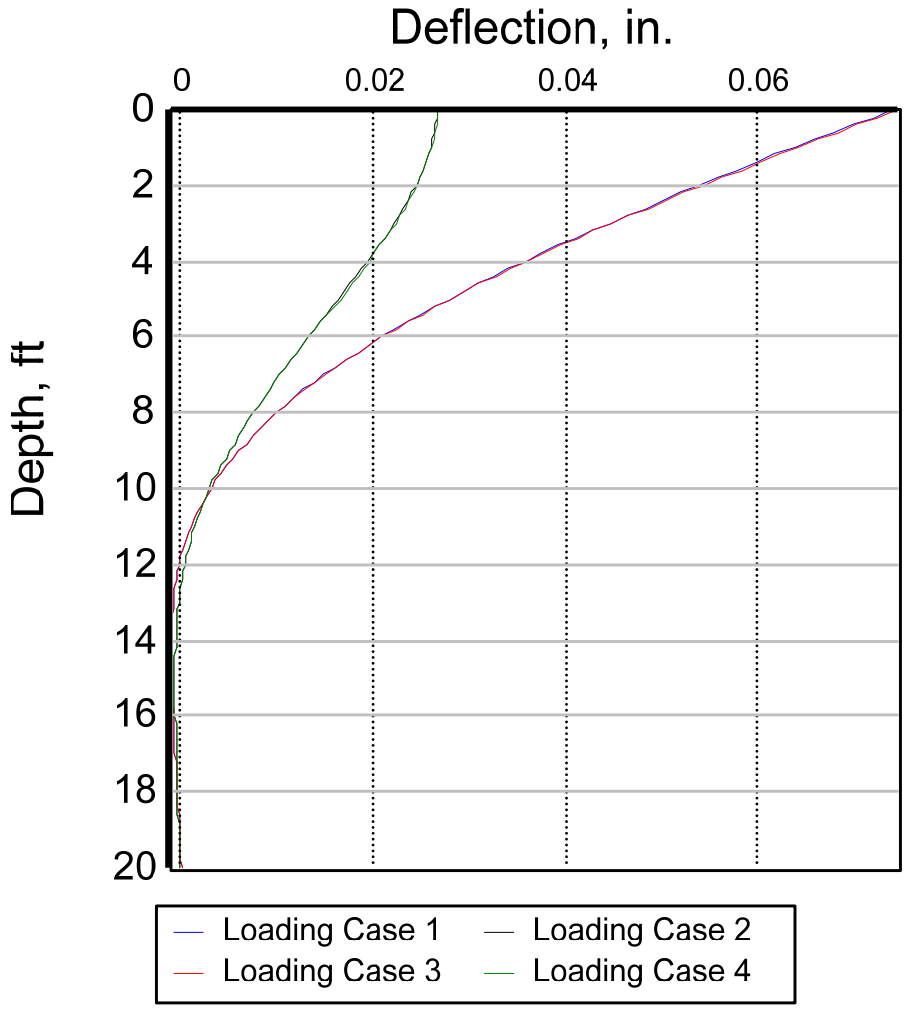

LPile 2016.9.02, © 2016 by Ensoft, Inc.

LOAD CASE 1: **No Axial Load, Free End, 25 kip lateral load**

LOAD CASE 2: **No Axial Load, Fixed End, 25 kip lateral load**

LOAD CASE 3: **152 kip Axial Load, Free End, 25 kip lateral load**

LOAD CASE 4: **152 kip Axial Load, Fixed End, 25 kip lateral load**

Collier County CSRM
Pile Diameter = 24 inches
Pile Length = 20 feet
Bending Moment vs. Depth

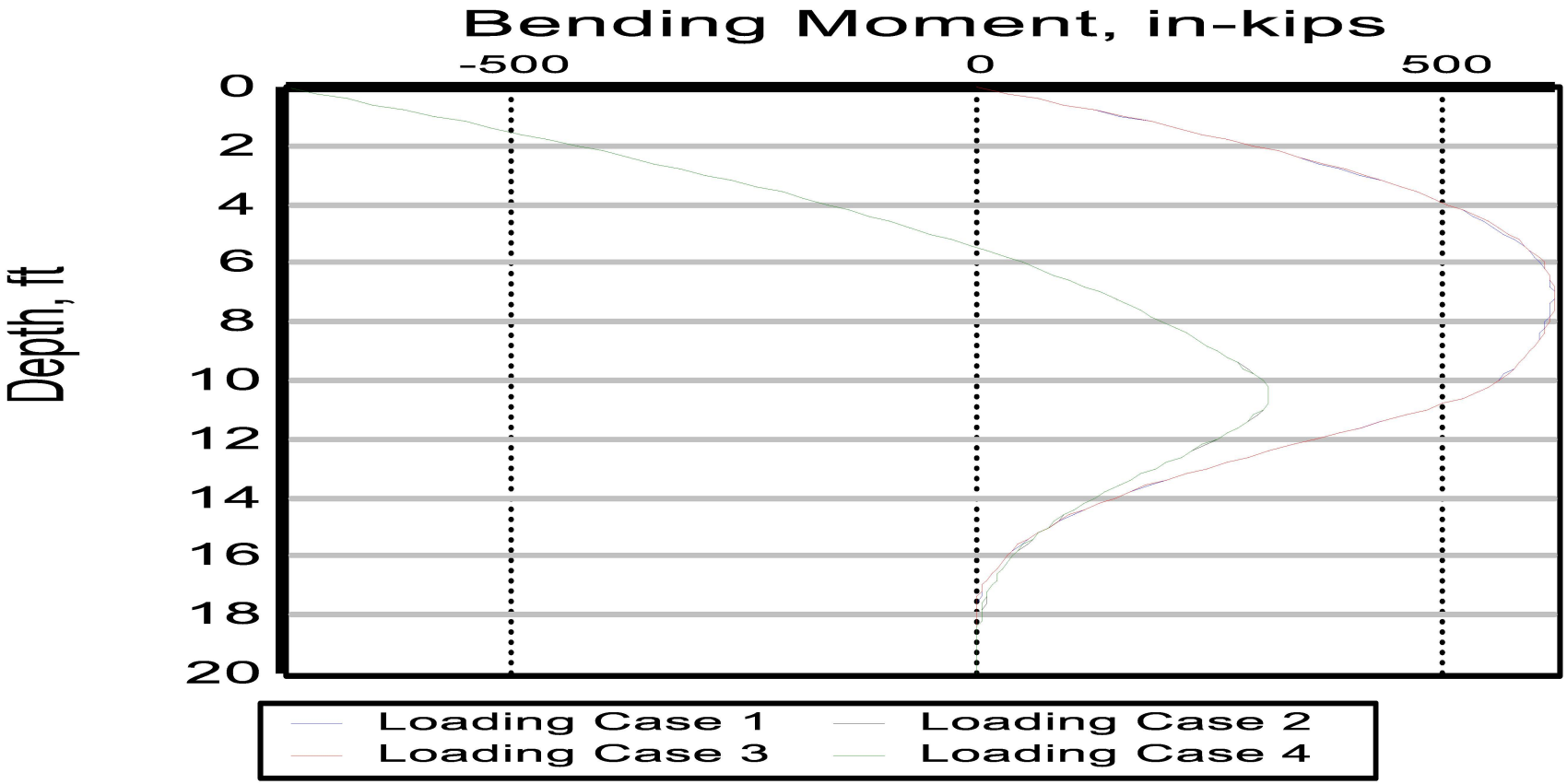

LPile 2016.9.02, © 2016 by Ensoft, Inc.

Collier County CSRM
Pile Diameter = 30 inches
Pile Length = 20 feet
Lateral Deflection vs. Depth

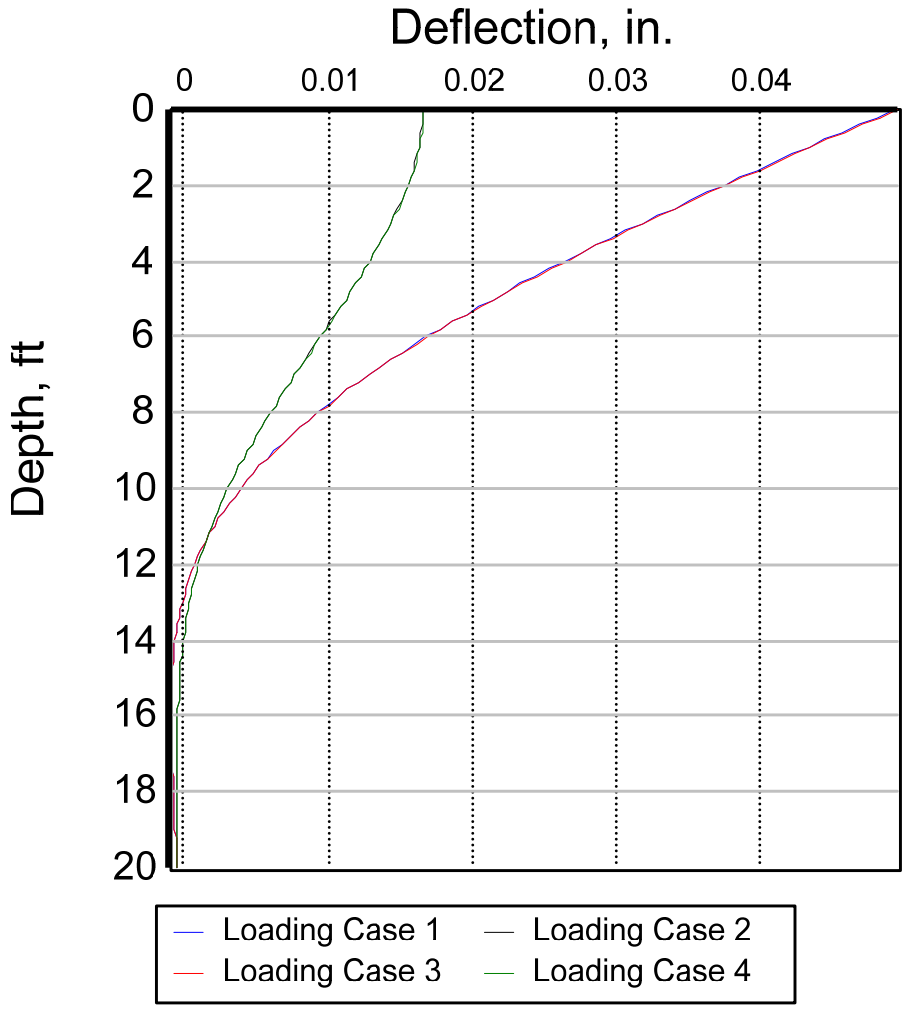

LPile 2016.9.02, © 2016 by Ensoft, Inc.

LOAD CASE 1: **No Axial Load, Free End, 25 kip lateral load**

LOAD CASE 2: **No Axial Load, Fixed End, 25 kip lateral load**

LOAD CASE 3: **152 kip Axial Load, Free End, 25 kip lateral load**

LOAD CASE 4: **152 kip Axial Load, Fixed End, 25 kip lateral load**

Collier County CSRM
Pile Diameter = 30 inches
Pile Length = 20 feet
Bending Moment vs. Depth

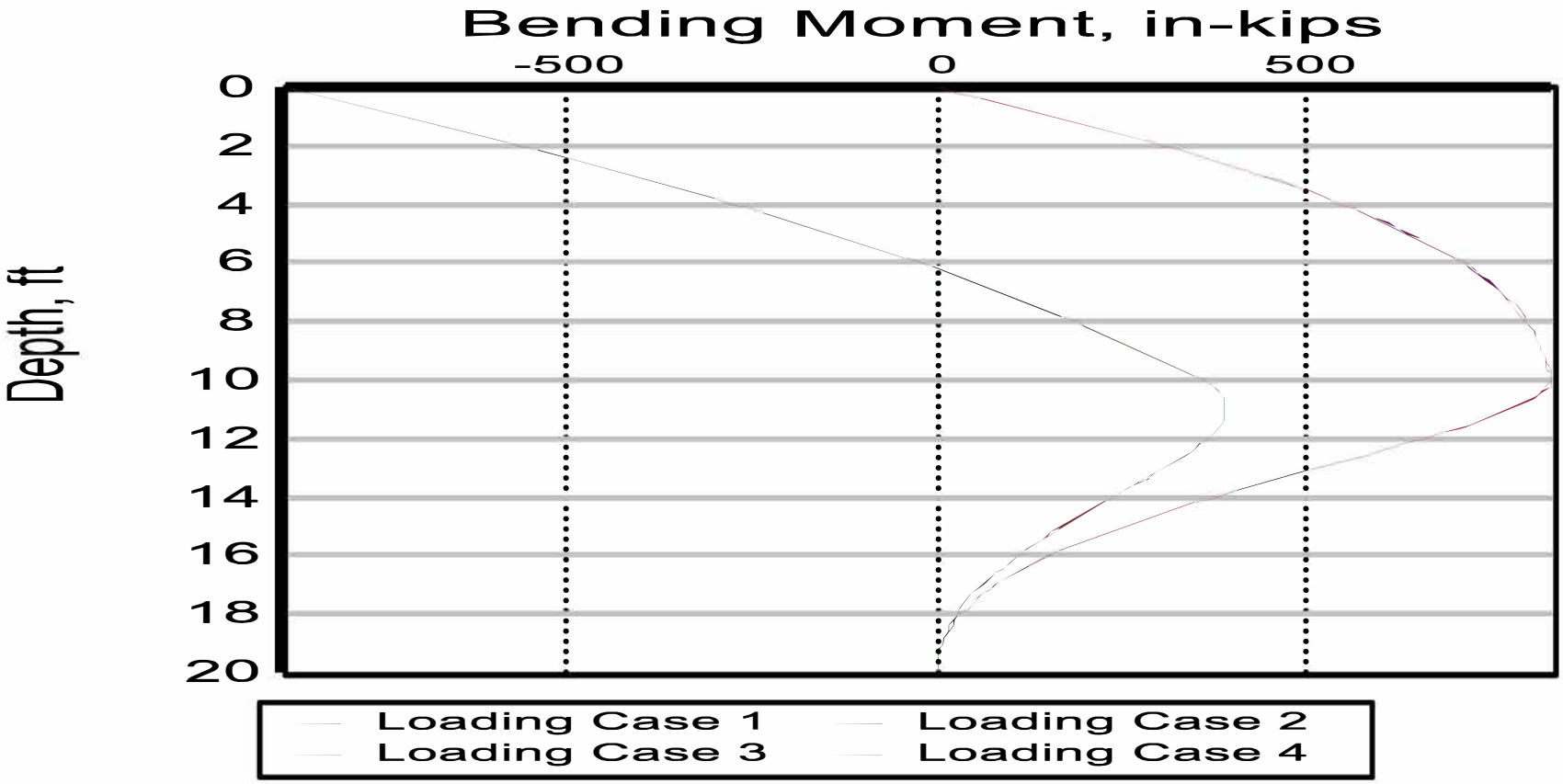

LPile 2016.9.02, © 2016 by Ensoft, Inc.

Collier County CSRM
Pile Diameter = 36 inches
Pile Length = 20 feet
Lateral Deflection vs. Depth

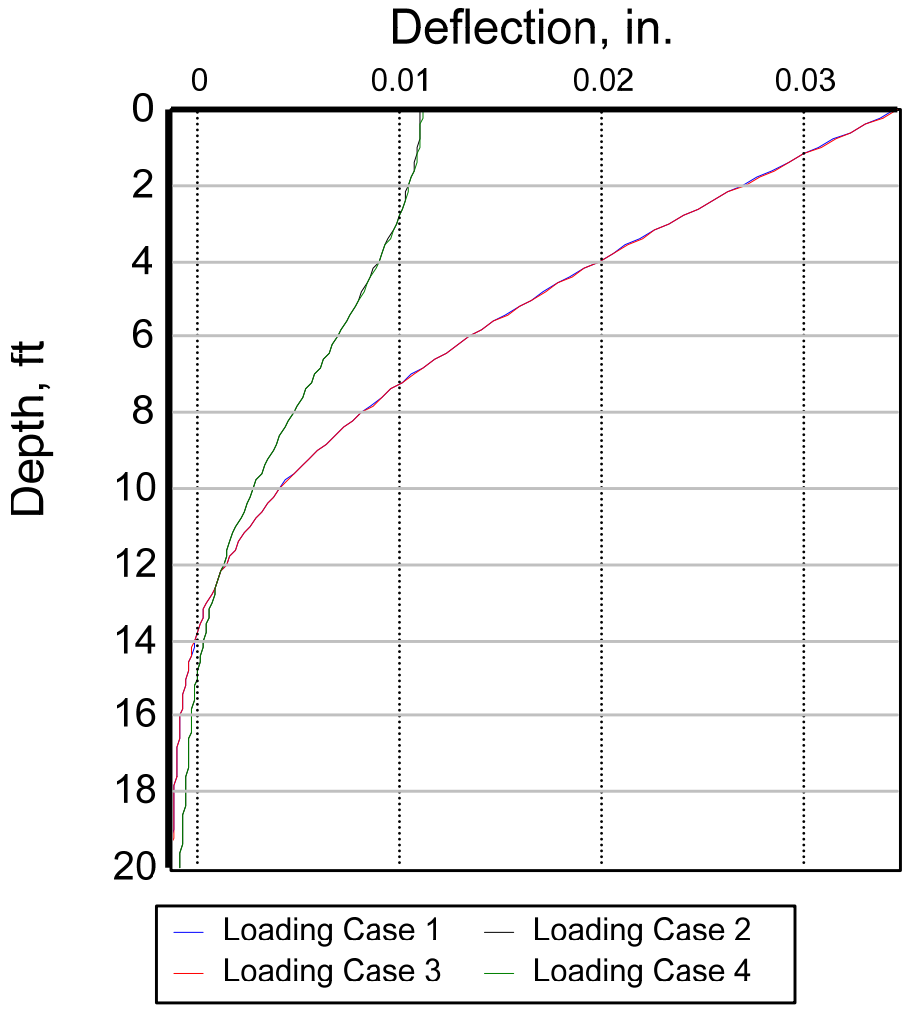

LPile 2016.9.02, © 2016 by Ensoft, Inc.

LOAD CASE 1: **No Axial Load, Free End, 25 kip lateral load**

LOAD CASE 2: **No Axial Load, Fixed End, 25 kip lateral load**

LOAD CASE 3: **152 kip Axial Load, Free End, 25 kip lateral load**

LOAD CASE 4: **152 kip Axial Load, Fixed End, 25 kip lateral load**

Collier County CSRM
Pile Diameter = 36 inches
Pile Length = 20 feet
Bending Moment vs. Depth

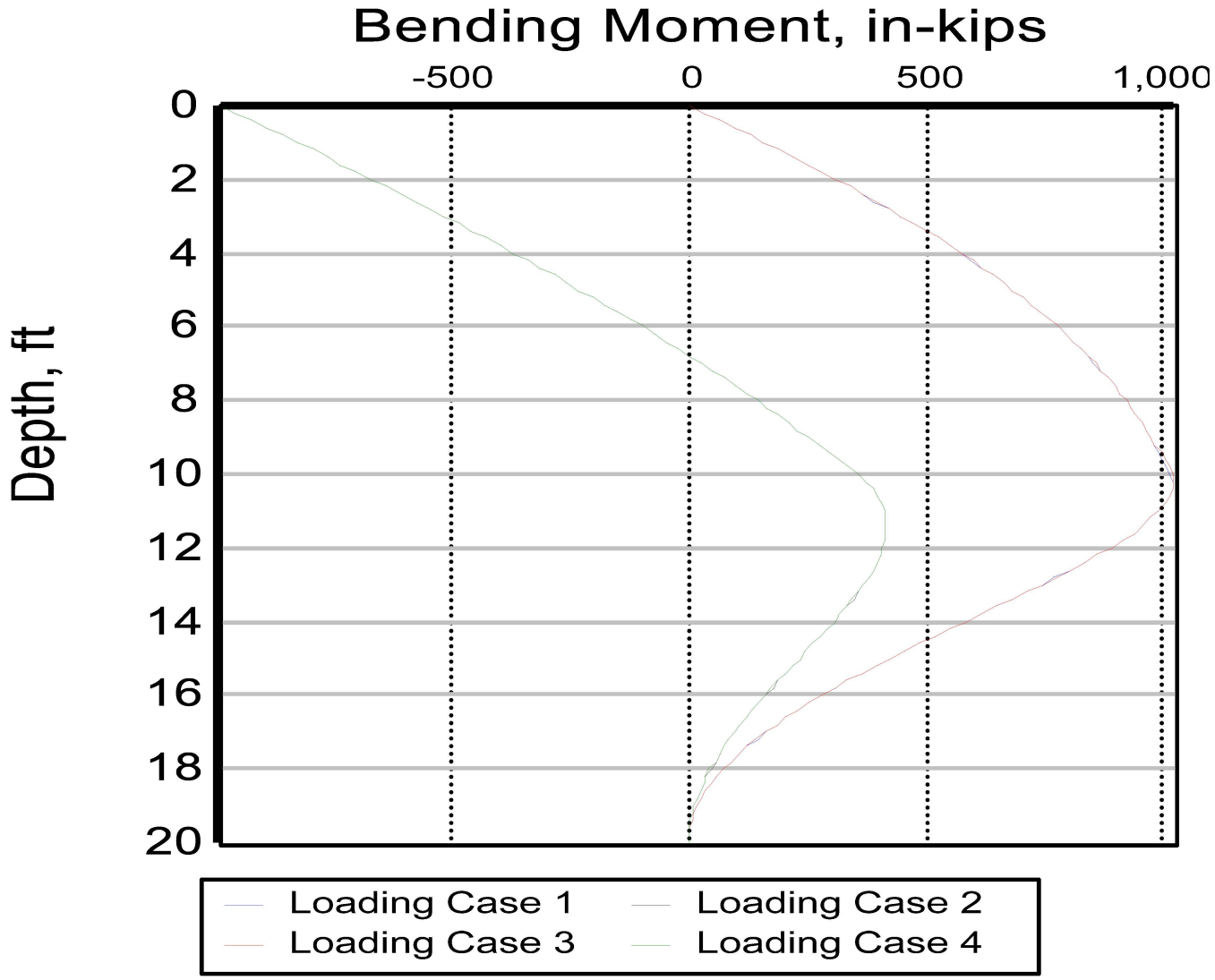

LPile 2016.9.02, © 2016 by Ensoft, Inc.

Collier County CSRM
Pile Diameter = 42 inches
Pile Length = 20 feet
Lateral Deflection vs. Depth

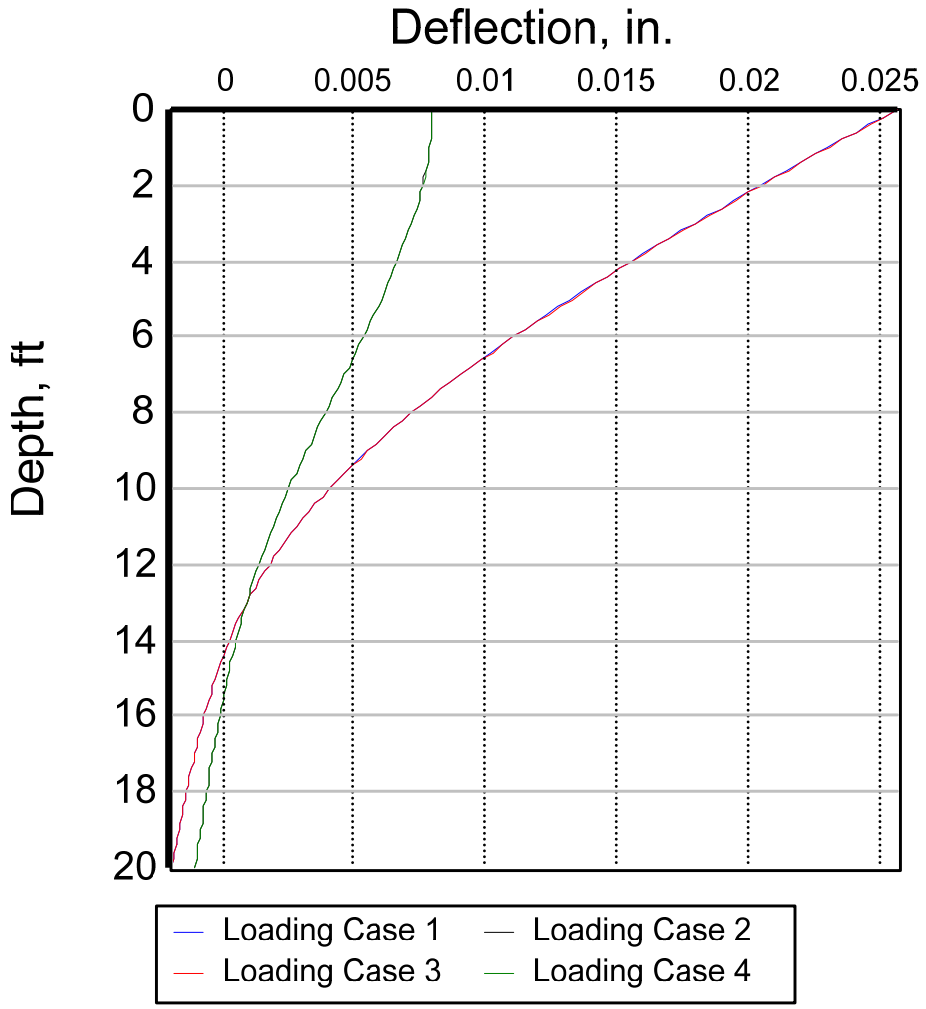

LPile 2016.9.02, © 2016 by Ensoft, Inc.

LOAD CASE 1: **No Axial Load, Free End, 25 kip lateral load**

LOAD CASE 2: **No Axial Load, Fixed End, 25 kip lateral load**

LOAD CASE 3: **152 kip Axial Load, Free End, 25 kip lateral load**

LOAD CASE 4: **152 kip Axial Load, Fixed End, 25 kip lateral load**

Collier County CSRM
Pile Diameter = 42 inches
Pile Length = 20 feet
Bending Moment vs. Depth

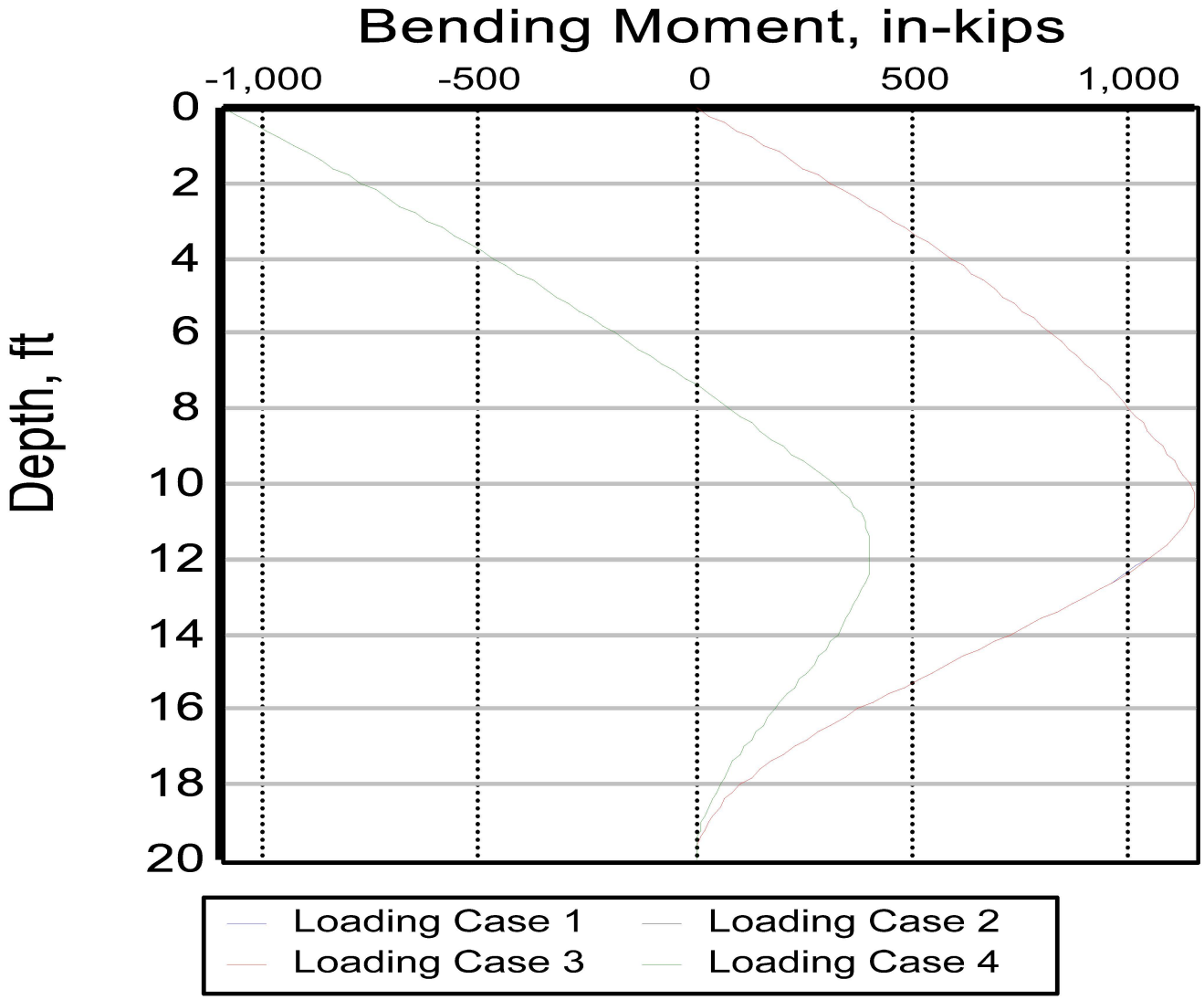

LPile 2016.9.02, © 2016 by Ensoft, Inc.

Collier County CSRM
Pile Diameter = 48 inches
Pile Length = 20 feet
Lateral Deflection vs. Depth

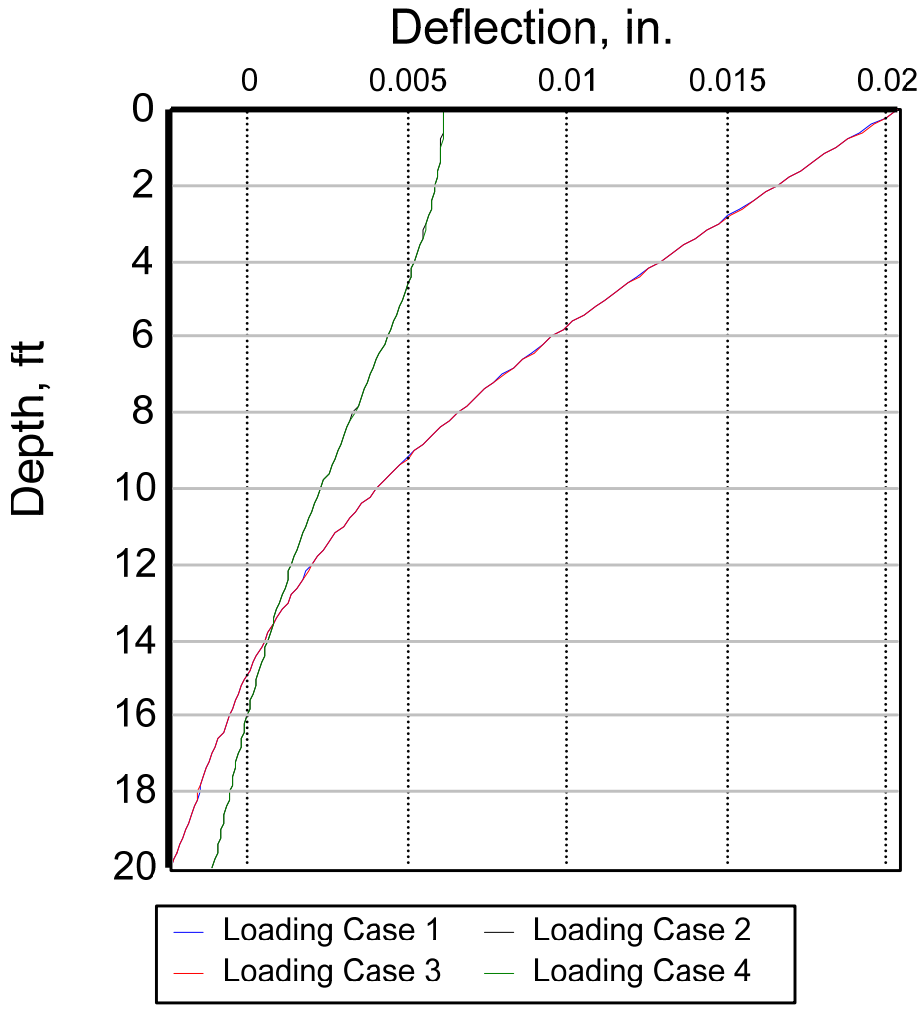

LPile 2016.9.02, © 2016 by Ensoft, Inc.

LOAD CASE 1: **No Axial Load, Free End, 25 kip lateral load**

LOAD CASE 2: **No Axial Load, Fixed End, 25 kip lateral load**

LOAD CASE 3: **152 kip Axial Load, Free End, 25 kip lateral load**

LOAD CASE 4: **152 kip Axial Load, Fixed End, 25 kip lateral load**

Collier County CSRM
Pile Diameter = 48 inches
Pile Length = 20 feet
Bending Moment vs. Depth

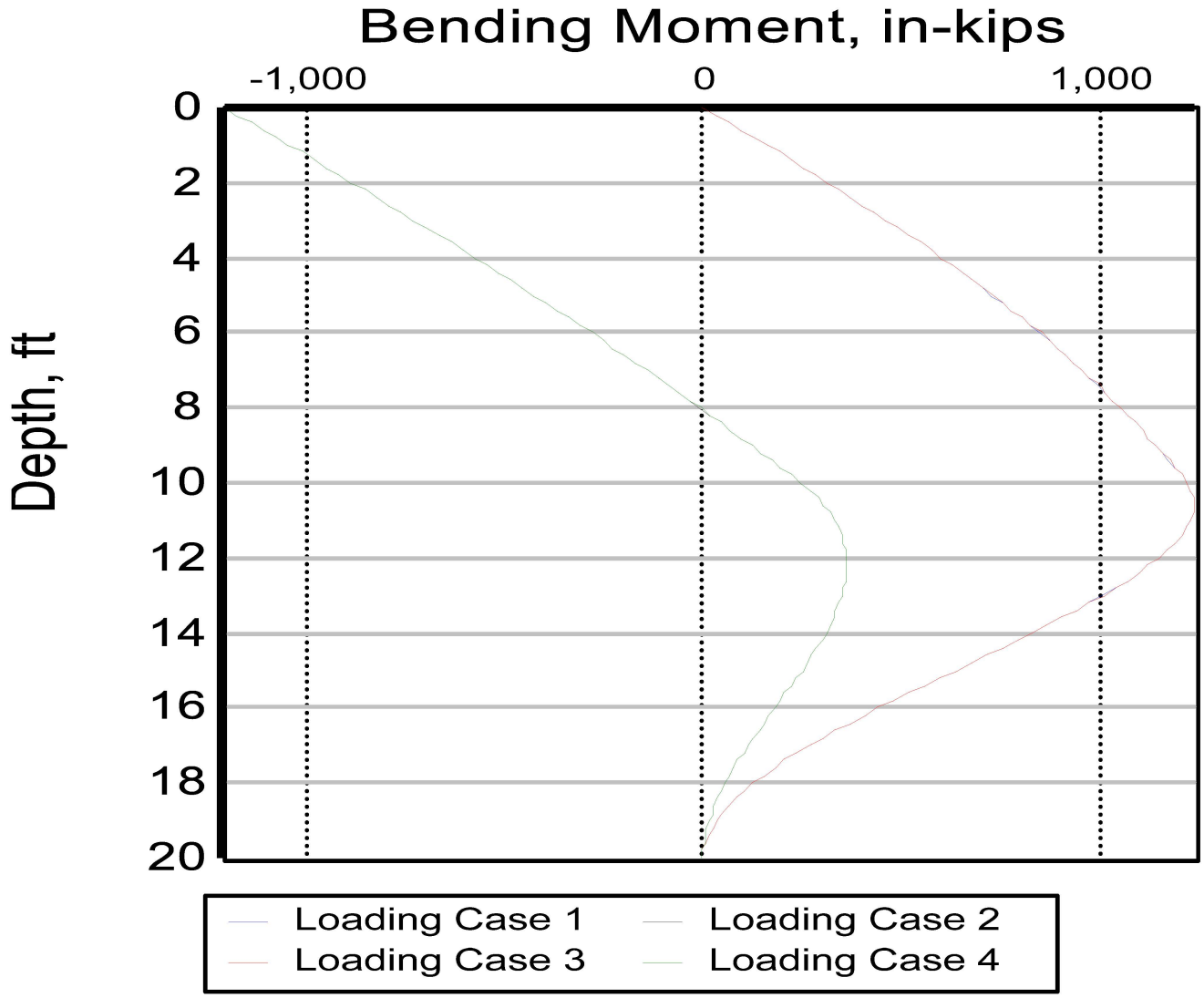

LPile 2016.9.02, © 2016 by Ensoft, Inc.

APPENDIX GEO-E: T-1 MAP

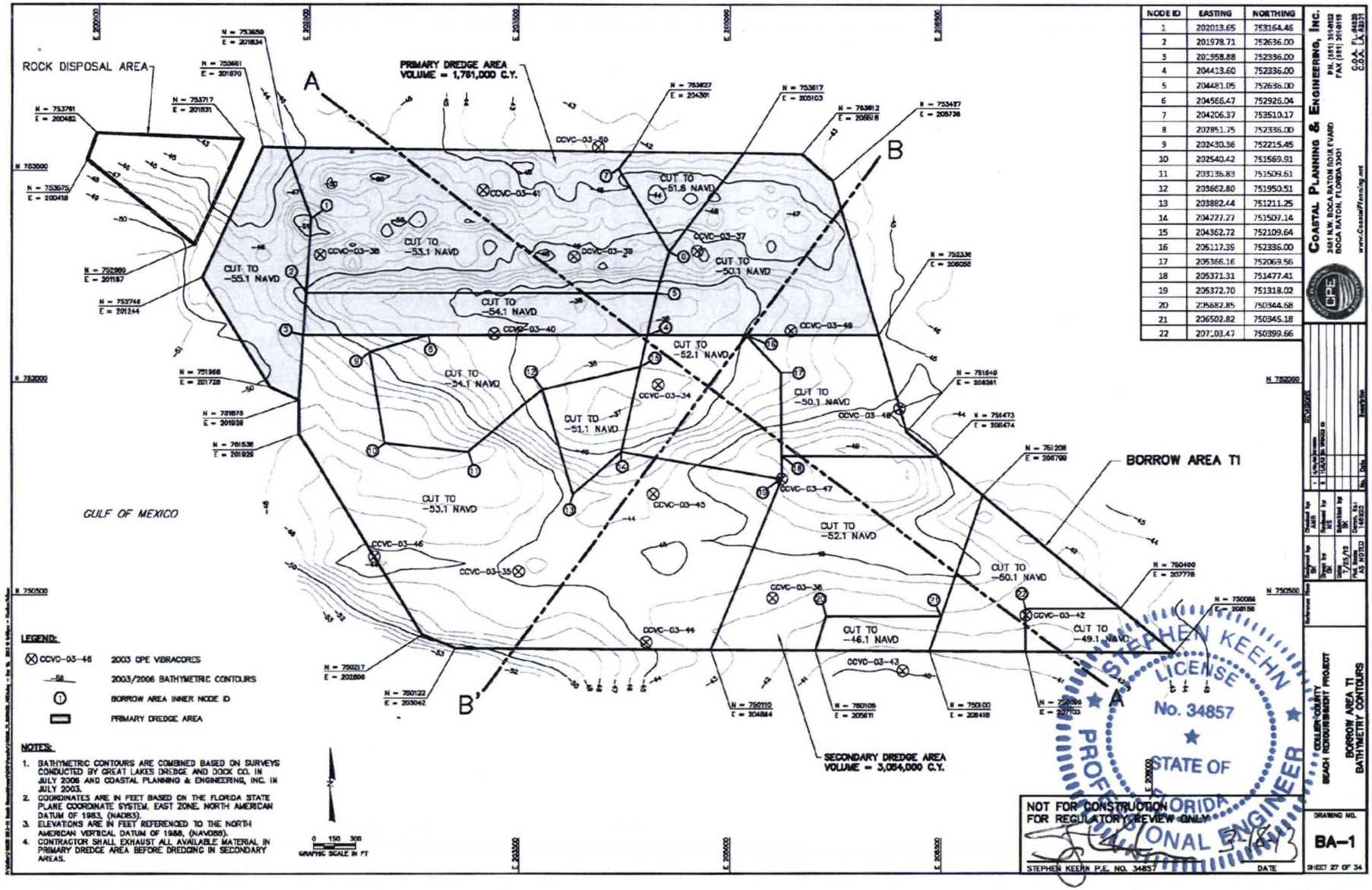

NODE ID	EASTING	NORTHING
1	202013.65	753164.46
2	201978.71	752636.00
3	201958.88	752336.00
4	204413.60	752336.00
5	204481.05	752636.00
6	204566.47	752926.04
7	204206.37	753510.17
8	202851.75	752336.00
9	202430.36	752215.45
10	202540.42	751569.91
11	203136.83	751509.61
12	203662.80	751950.51
13	203882.44	751211.25
14	204227.27	751507.14
15	204362.72	752109.64
16	205117.35	752336.00
17	205366.16	752069.56
18	205371.31	751477.41
19	205372.70	751318.02
20	205682.85	750344.58
21	206502.82	750345.18
22	207103.47	750399.66

Attachment 1 – Map Showing Borrow Area T-1

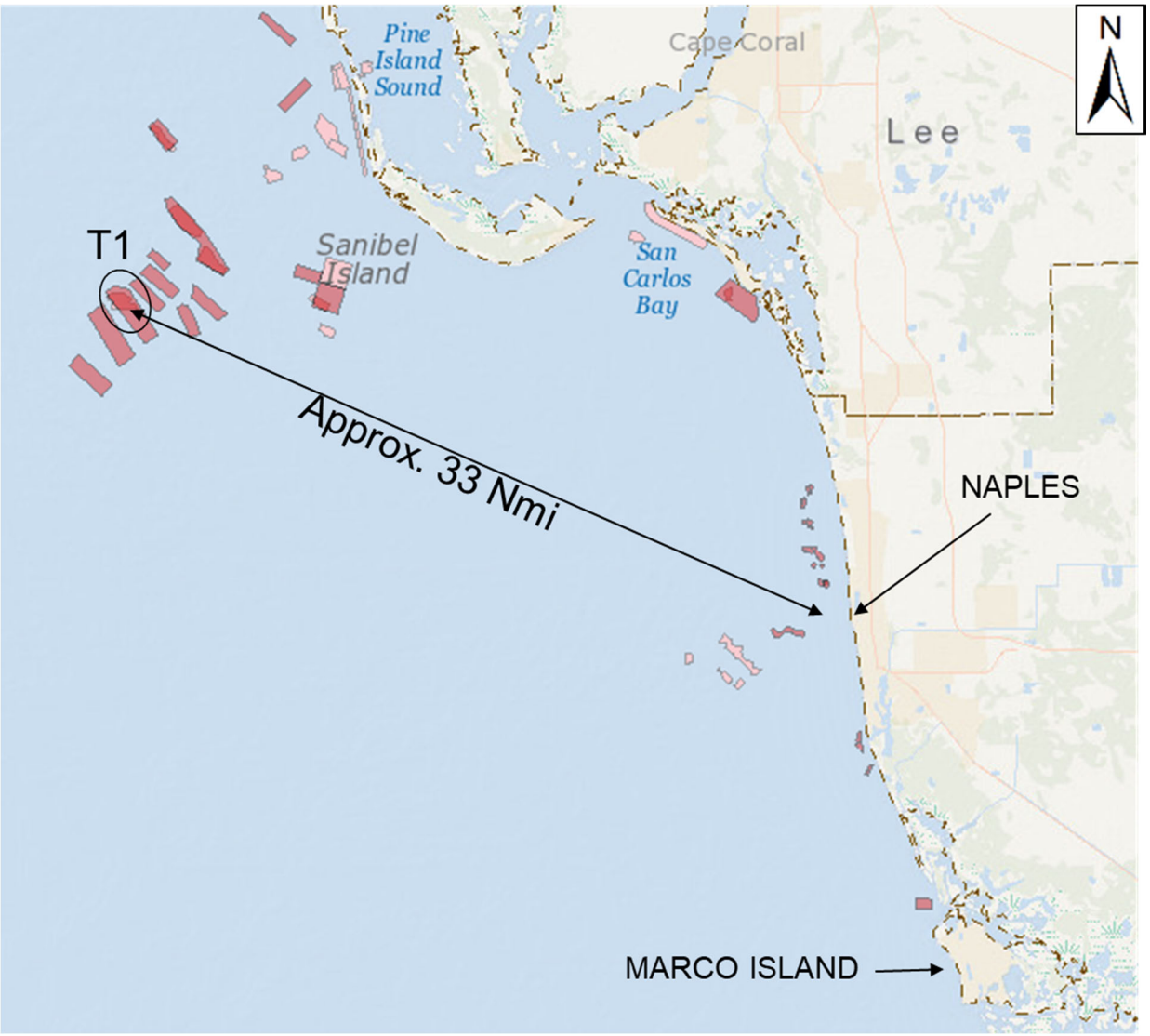

Attachment 2 – Borrow Area T-1 Aerial Map

APPENDIX GEO-F: PROJECT AREA BORING LOGS

2009 CPE Vibracores

Coastal Planning & Engineering, Inc.
2481 N.W. Boca Raton Blvd.
Boca Raton, Florida 33431
Phone # 1-561-391-8102

Legend for Geotechnical Data

(SP), (SM), etc. — Refers to the Army Corps of Engineers Unified Soils Classification System. Class types are defined primarily by grain size, sorting and percent of material passing the 200 sieve. Classification of materials on the core logs based on visual field examinations are identified on the core logs under the Classification of Materials Description. Classifications based on laboratory sieve analyses are identified on the core logs in the Legend and under Remarks.

Grain Size Terms

Cobble – retained on the 3.0" sieve

Gravel – greater than the #4 sieve and less than the 3.0" sieve
- Coarse: greater than the ¾" sieve and less than the 3.0" sieve
- Fine – greater than the #4 sieve and less than the ¾" sieve

Sand - greater than the #200 sieve and less than the #4 sieve
- Coarse - greater than the #10 sieve and less than the #4 sieve
- Medium - greater than the #40 sieve and less than the #10 sieve
- Fine - greater than the #230 sieve and less than the #40 sieve

Fines – (silt or clay) passing the #230 sieve

Proportional definition of descriptive terms

Descriptive Term	Range of Proportions
Sandy, gravelly, etc.	35 % to 50 %
Some	20 % to 35 %
Little	10 % to 20 %
Trace	1 % to 10 %

Note: Information is after ACOE Atlantic Division Manual # 1110-1-1 titled *Engineering and Design Geotechnical Manual for Surface and Subsurface Investigations*

Coastal Planning & Engineering, Inc.
2481 N.W. Boca Raton Blvd.
Boca Raton, Florida 33431
Phone # 1-561-391-8102

Legend for Geotechnical Data

GW	Well graded gravels or gravel-sand mixtures, little or no fines	ML	Inorganic silts and very fine sands, rock flour, sandy silts or clayey silts with slight plasticity
GP	Poorly graded gravels or gravel-sand mixtures, w/ little or no fines	MH	Inorganic silts, micaceous or diatomaceous fine sandy or silty soild, elastic silts
GM	Silty gravels, gravel-sand-silt mixtures	OL	Organic silts and organic silt-clays of low plasticity
GC	Clayey gravels, gravel-sand-clay mixtures	OH	Organic clays of medium to high plasticity, organic silts
SW	Well graded sands or gravelly sands, little or no fines	CL	Inorganic clays of low to medium plasticity, gravelly clays, sandy clays, silty clays, lean clays
SP	Poorly graded sands or gravelly sands, little or no fines	CH	Inorganic clays of high plasticity, fat clays
SM	Silty sands, sand-silt mixtures	PT	Peat and other highly organic soils
SC	Clayey sands, sand-clay mixtures	SP-SM	Poorly-graded silty sand
SW-SM	Well-graded silty sand	SM-SC	Silty clayey sand
GW-GM	Well-graded silty gravel	ML-CL	Inorganic silty lean clay
GM-GC	Clayey silty gravel		

Note: Information is after ACOE Atlantic Division Manual # 1110-1-1 titled *Engineering and Design Geotechnical Manual for Surface and Subsurface Investigations*

Coastal Planning & Engineering, Inc.
2481 N.W. Boca Raton Blvd.
Boca Raton, Florida 33431
Phone # 1-561-391-8102

Legend for Geotechnical Data

The naming convention used by Coastal Planning and Engineering incorporates key information about the item in the title. The naming format uses the following information:

- Abbreviated area name (two letters that will be used throughout the project)
- Abbreviated data type: jet probe (JP), vibracore (VC) or surface sample (SS)
- Collection year (YY)
- Identification number
- Sample or composite identification in the case of jet probes or vibracores. Composite samples are indicated by COMP following the identification number. COMP represents a composite developed to characterize beach compatible material.

Format examples:

A) WPVC-09-03

B) WPVC-11-06 S#1

Example A is vibracore number 03, collected in the Wiggins Pass area of Collier County in the year 2009.

Example B refers to sample number 1 taken from vibracore number 06, which was collected in the Wiggins Pass area of Collier County in 2011.

Note: Information is after ACOE Atlantic Division Manual # 1110-1-1 titled *Engineering and Design Geotechnical Manual for Surface and Subsurface Investigations*

Boring Designation WPVC-09-01

DRILLING LOG

DIVISION	
INSTALLATION	
SHEET 1 OF 1 SHEETS	
1. PROJECT	Wiggins Pass 2009 Vibracores Collier County, FL
2. BORING DESIGNATION	WPVC-09-01
LOCATION COORDINATES	X = 385,297 Y = 712,138
3. DRILLING AGENCY	Athena
CONTRACTOR FILE NO.	
4. NAME OF DRILLER	Neal Wicker
5. DIRECTION OF BORING	☒ VERTICAL ☐ INCLINED
DEG. FROM VERTICAL	
BEARING	
6. THICKNESS OF OVERBURDEN	0.0 Ft.
7. DEPTH DRILLED INTO ROCK	0.0 Ft.
8. TOTAL DEPTH OF BORING	9.0 Ft.
9. SIZE AND TYPE OF BIT	3.0 In.
10. COORDINATE SYSTEM/DATUM	Florida State Plane East
HORIZONTAL	NAD 1983
VERTICAL	NAVD 88
11. MANUFACTURER'S DESIGNATION OF DRILL	Mechanical
☐ AUTO HAMMER ☐ MANUAL HAMMER	
12. TOTAL SAMPLES	
DISTURBED	
UNDISTURBED (UD)	
13. TOTAL NUMBER CORE BOXES	
14. ELEVATION GROUND WATER	
15. DATE BORING	STARTED 08-12-09 09:06
COMPLETED	08-12-09 09:07
16. ELEVATION TOP OF BORING	-6.4 Ft.
17. TOTAL RECOVERY FOR BORING	8 Ft.
18. SIGNATURE AND TITLE OF INSPECTOR	PB

ELEV. (ft)	DEPTH (ft)	LEGEND	CLASSIFICATION OF MATERIALS Depths and elevations based on measured values	% REC.	BOX OR SAMPLE	REMARKS Shell Hash calculated from visual estimate of shell <4.75mm and >2.8mm.
-6.4	0.0					
-7.0	0.6		SAND, fine grained, quartz, trace shell fragments, trace shell hash, trace silt, shell fragments typically up to 0.5", 2 (1.25"x0.75") shell fragments @ core top, 1.0" dark gray (2.5Y-4/1) pocket of increased fines and little organics @ 0.4', gray (2.5Y-6/1), (SW).		1	Sample #1, Depth = 0.2' Mean (mm): 0.21, Phi Sorting: 1.36 Shell Hash: 1%, Fines (230): 3.00% (SW)
-8.9	2.5					
-9.7	3.3		Organic CLAY, little sand, sand is distributed in laminae and pockets up to 1.0", material mottles with light brownish gray (2.5Y-6/2) sand laminae in transition @ base of layer, black (2.5Y-2.5/1), (OL).		2	Sample #2, Depth = 3.0' Mean (mm): 0.18, Phi Sorting: 0.51 Shell Hash: 0%, Fines (230): 2.64% (SP)
-12.2	5.8		SAND, fine grained, quartz, trace organics, trace silt, organics distributed in laminae and pockets up to 0.75", light brownish gray (10YR-6/2), (SP).		3	Sample #3, Depth = 4.0' Mean (mm): 0.19, Phi Sorting: 0.49 Shell Hash: 0%, Fines (230): 4.13% (SP)
-14.4	8.0		SAND, fine grained, quartz, some organics, trace silt, 3.5" brown (10YR-4/3) pocket of decreased organics @ 4.4', (0.25"x1.5") pocket of clean sand @ 4.2', very dark grayish brown (10YR-3/2), (SP).		4	Sample #4, Depth = 7.0' Mean (mm): 0.22, Phi Sorting: 0.44 Shell Hash: 0%, Fines (230): 1.60% (SP)
-15.4	9.0		SAND, fine grained, quartz, trace organics, trace silt, trace organic clayey laminae, light olive brown (2.5Y-5/4), (SP).			
			No Recovery.			
			End of Boring			

0 5 10 15 20 25

FLORIDA DEP ROSS WPVC-09-01-06.GPJ JPBRAZIL.GDT 9/28/09

SAJ FORM 1836 JUN 02 **MODIFIED FOR THE FLORIDA DEP** JUN 04

Boring Designation WPVC-09-02

DRILLING LOG

DIVISION	
INSTALLATION	
SHEET 1 OF 1 SHEETS	
1. PROJECT	Wiggins Pass 2009 Vibracores Collier County, FL
2. BORING DESIGNATION	WPVC-09-02
LOCATION COORDINATES	X = 384,818 Y = 711,731
3. DRILLING AGENCY	Athena
CONTRACTOR FILE NO.	
4. NAME OF DRILLER	Neal Wicker
5. DIRECTION OF BORING	☒ VERTICAL ☐ INCLINED
DEG. FROM VERTICAL	
BEARING	
6. THICKNESS OF OVERBURDEN	0.0 Ft.
7. DEPTH DRILLED INTO ROCK	0.0 Ft.
8. TOTAL DEPTH OF BORING	11.0 Ft.
9. SIZE AND TYPE OF BIT	3.0 In.
10. COORDINATE SYSTEM/DATUM	Florida State Plane East
HORIZONTAL	NAD 1983
VERTICAL	NAVD 88
11. MANUFACTURER'S DESIGNATION OF DRILL	Mechanical
☐ AUTO HAMMER ☐ MANUAL HAMMER	
12. TOTAL SAMPLES	
DISTURBED	
UNDISTURBED (UD)	
13. TOTAL NUMBER CORE BOXES	
14. ELEVATION GROUND WATER	
15. DATE BORING	STARTED 08-12-09 09:39
COMPLETED	08-12-09 09:40
16. ELEVATION TOP OF BORING	-3.1 Ft.
17. TOTAL RECOVERY FOR BORING	10 Ft.
18. SIGNATURE AND TITLE OF INSPECTOR	PB

ELEV. (ft)	DEPTH (ft)	LEGEND	CLASSIFICATION OF MATERIALS Depths and elevations based on measured values	% REC.	BOX OR SAMPLE	REMARKS Shell Hash calculated from visual estimate of shell <4.75mm and >2.8mm.
-3.1	0.0					
-3.7	0.6		SAND, fine grained, quartz, little shell hash, trace shell fragments, trace silt, trace whole shell, shell fragments and whole shells typically up to 0.75", 2 (1.0") whole shells @ core top, (1.0"x2.0") rock fragment @ 0.2', 1.0" clayey pocket @ 0.1', shell hash increases with depth, light gray (2.5Y-7/1), (SW).		1	Sample #1, Depth = 0.3' Mean (mm): 0.22, Phi Sorting: 1.02 Shell Hash: 0%, Fines (230): 1.54% (SW)
-4.5	1.4				2	Sample #2, Depth = 1.0' Mean (mm): 1.32, Phi Sorting: 2.84 Shell Hash: 6%, Fines (230): 1.08% (SW)
-6.6	3.5		SAND, fine grained, quartz, some shell hash, little shell fragments, little whole shell, trace silt, whole shells up to 1.5", shell fragments up to 1.0", light gray (2.5Y-7/1), (SW).		3	Sample #3, Depth = 2.2' Mean (mm): 0.23, Phi Sorting: 1.35 Shell Hash: 1%, Fines (230): 1.42% (SW)
-9.1	6.0		SAND, fine grained, quartz, trace organics, trace shell fragments, trace shell hash, trace silt, trace whole shell, whole shells and shell fragments typically up to 1.0", organics distributed in pockets up to 0.5", 3 (2.0"x1.5") shell fragments @ 2.8' and (1) @ 3.5', 3.0" pocket of mottled very dark gray (2.5Y-3/1) organics and gray (2.5Y-5/1) clay @ 3.0', pocket of increased organics from 1.7' to 2.0', light gray (2.5Y-7/1), (SW).		4	Sample #4, Depth = 4.5' Mean (mm): 0.20, Phi Sorting: 0.64 Shell Hash: 0%, Fines (230): 4.26% (SP-SM)
-10.0	6.9				5	Sample #5, Depth = 6.5' Mean (mm): 0.19, Phi Sorting: 0.58 Shell Hash: 0%, Fines (230): 3.86% (SP)
-12.6	9.5				6	Sample #6, Depth = 8.3' Mean (mm): 0.19, Phi Sorting: 0.51 Shell Hash: 0%, Fines (230): 3.12% (SP)
-13.1	10.0				5	
-14.1	11.0		SAND, fine grained, quartz, little organics, trace clay, little organic laminae throughout, 2.5" pocket of wood fragments @ 5.3', color is mottled with gray (2.5Y-6/1) and, dark gray (2.5Y-4/1), (SP-SM).			
			SAND, fine grained, quartz, little organics, trace clay, clay is distributed in laminae and pockets up to 0.5", dark olive brown (2.5Y-3/3), (SP).			
			SAND, fine grained, quartz, trace clay, trace organics, trace organic pockets up to 0.5", clay distributed in laminae and pockets up to 0.75", light olive brown (2.5Y-5/3), (SP).			
			SAND, fine grained, quartz, little organics, trace clay, clay distributed in laminae and pockets up to 0.25", dark olive brown (2.5Y-3/3), (SP).			
			No Recovery.			
			End of Boring			

0 5 10 15 20 25

FLORIDA DEP ROSS WPVC-09-01-06.GPJ JPBRAZIL.GDT 9/28/09

SAJ FORM 1836 **MODIFIED FOR THE FLORIDA DEP**
JUN 02 JUN 04

Boring Designation WPVC-09-03

DRILLING LOG

DIVISION	
INSTALLATION	
SHEET 1 OF 1 SHEETS	
1. PROJECT	Wiggins Pass 2009 Vibracores Collier County, FL
2. BORING DESIGNATION	WPVC-09-03
LOCATION COORDINATES	X = 384,548 Y = 711,832
3. DRILLING AGENCY	Athena
CONTRACTOR FILE NO.	
4. NAME OF DRILLER	Neal Wicker
5. DIRECTION OF BORING	☒ VERTICAL ☐ INCLINED
DEG. FROM VERTICAL	
BEARING	
6. THICKNESS OF OVERBURDEN	0.0 Ft.
7. DEPTH DRILLED INTO ROCK	0.0 Ft.
8. TOTAL DEPTH OF BORING	10.0 Ft.
9. SIZE AND TYPE OF BIT	3.0 In.
10. COORDINATE SYSTEM/DATUM	Florida State Plane East
HORIZONTAL	NAD 1983
VERTICAL	NAVD 88
11. MANUFACTURER'S DESIGNATION OF DRILL	Mechanical
☐ AUTO HAMMER ☐ MANUAL HAMMER	
12. TOTAL SAMPLES	
DISTURBED	
UNDISTURBED (UD)	
13. TOTAL NUMBER CORE BOXES	
14. ELEVATION GROUND WATER	
15. DATE BORING	STARTED 08-12-09 10:10
COMPLETED	08-12-09 10:11
16. ELEVATION TOP OF BORING	-2.9 Ft.
17. TOTAL RECOVERY FOR BORING	8.9 Ft.
18. SIGNATURE AND TITLE OF INSPECTOR	PB

ELEV. (ft)	DEPTH (ft)	LEGEND	CLASSIFICATION OF MATERIALS Depths and elevations based on measured values	% REC.	BOX OR SAMPLE	REMARKS Shell Hash calculated from visual estimate of shell <4.75mm and >2.8mm.
-2.9	0.0					
-4.5	1.6		Shelly SAND, fine grained, quartz, trace silt, shell component is shell hash, shell fragments and whole shells up to 1.5", 1.0" reduced shell pocket @ 0.4', light gray (2.5Y-7/1), (GW).		1	Sample #1, Depth = 0.9' Mean (mm): 1.30, Phi Sorting: 2.23 Shell Hash: 9%, Fines (230): 1.09% (SW)
-5.4	2.5		SAND, fine grained, quartz, trace shell fragments, trace shell hash, trace silt, trace whole shell, shell fragments and whole shells typically up to 1.0", (2.0"x1.5") shell fragment @ 2.0', 2.0" shelly pocket @ base, shell component is shell hash, shell fragments and whole shells up to 1.25", light gray (5Y-7/1), (SW).		2	Sample #2, Depth = 2.1' Mean (mm): 0.26, Phi Sorting: 1.48 Shell Hash: 2%, Fines (230): 2.45% (SW)
-9.7	6.8				3	Sample #3, Depth = 4.3' Mean (mm): 0.31, Phi Sorting: 1.08 Shell Hash: 1%, Fines (230): 1.41% (SW)
-10.2	7.3		SAND, fine grained, quartz, trace shell fragments, trace shell hash, trace silt, trace whole shell, whole shells and shell fragments up to 1.25", trace organic clay pockets up to 1.25", 1.0" wood fragment @ 6.2', 2.0" pocket of increased whole shells and shell fragments @ 6.3', light gray (2.5Y-7/1), (SW).		4	Sample #4, Depth = 7.1' Mean (mm): 1.01, Phi Sorting: 2.68 Shell Hash: 5%, Fines (230): 2.99% (SW)
-11.8	8.9				5	Sample #5, Depth = 8.5' Mean (mm): 0.20, Phi Sorting: 0.57 Shell Hash: 0%, Fines (230): 4.53% (SP-SC)
-12.9	10.0		SAND, fine grained, quartz, some shell, trace silt, shell component is shell hash, shell fragments up to 1.25", and whole shells up to 0.75", (1.5"x1.0") rock fragment @ 6.9', (1.0"x0.75") rock fragment @ 7.2', gray (2.5Y-5/1), (GW-GM).			
			SAND, fine grained, quartz, little organics, trace clay, organics distributed in pockets up to 0.5", increased organic clays between 7.8' and 8.4', color is mottled with grayish brown (2.5Y-5/2) and, dark grayish brown (2.5Y-4/2), (SP-SC).			
			No Recovery.			
			End of Boring			

0 5 10 15 20 25

FLORIDA DEP ROSS WPVC-09-01-06.GPJ JPBRAZIL.GDT 9/28/09

Boring Designation WPVC-09-04

DRILLING LOG

DIVISION	
INSTALLATION	
SHEET 1 OF 1 SHEETS	
1. PROJECT	Wiggins Pass 2009 Vibracores Collier County, FL
2. BORING DESIGNATION	WPVC-09-04
LOCATION COORDINATES	X = 384,269 Y = 711,617
3. DRILLING AGENCY	Athena
CONTRACTOR FILE NO.	
4. NAME OF DRILLER	Neal Wicker
5. DIRECTION OF BORING	☒ VERTICAL ☐ INCLINED
DEG. FROM VERTICAL	
BEARING	
6. THICKNESS OF OVERBURDEN	0.0 Ft.
7. DEPTH DRILLED INTO ROCK	0.0 Ft.
8. TOTAL DEPTH OF BORING	11.0 Ft.
9. SIZE AND TYPE OF BIT	3.0 In.
10. COORDINATE SYSTEM/DATUM	Florida State Plane East
HORIZONTAL	NAD 1983
VERTICAL	NAVD 88
11. MANUFACTURER'S DESIGNATION OF DRILL	Mechanical
☐ AUTO HAMMER ☐ MANUAL HAMMER	
12. TOTAL SAMPLES	
DISTURBED	
UNDISTURBED (UD)	
13. TOTAL NUMBER CORE BOXES	
14. ELEVATION GROUND WATER	
15. DATE BORING	STARTED 08-12-09 10:30
COMPLETED	08-12-09 10:31
16. ELEVATION TOP OF BORING	-5.0 Ft.
17. TOTAL RECOVERY FOR BORING	10 Ft.
18. SIGNATURE AND TITLE OF INSPECTOR	KD

ELEV. (ft)	DEPTH (ft)	LEGEND	CLASSIFICATION OF MATERIALS Depths and elevations based on measured values	% REC.	BOX OR SAMPLE	REMARKS Shell Hash calculated from visual estimate of shell <4.75mm and >2.8mm.
-5.0	0.0					
-6.0	1.0		SHELL HASH, little shell fragments, little whole shell, trace sand, trace silt, shell fragments and whole shells up to 1.75", light gray (5Y-7/1), (GW).		1	Sample #1, Depth = 0.5' Mean (mm): 2.04, Phi Sorting: 2.04 Shell Hash: 11%, Fines (230): 0.84% (SW)
-6.7	1.7				2	Sample #2, Depth = 1.3'
-7.8	2.8		SAND, fine grained, quartz, some shell hash, trace shell fragments, trace silt, trace whole shell, shell fragments and whole shells up to 1.5", (1.5"x1.75") rock fragment @ 1.6', gray (5Y-6/1), (SW).		3	Mean (mm): 0.44, Phi Sorting: 1.95 Shell Hash: 4%, Fines (230): 1.56% (SW)
-8.7	3.7					Sample #3, Depth = 2.2' Mean (mm): 0.52, Phi Sorting: 2.09 Shell Hash: 5%, Fines (230): 1.29% (SW)
-10.3	5.3		SAND, fine grained, quartz, trace shell fragments, trace shell hash, trace silt, trace whole shell, shell fragments up to 1.75", whole shells up to 1.25", light gray (5Y-7/1), (SW).		4	Sample #4, Depth = 4.5' Mean (mm): 0.15, Phi Sorting: 0.67 Shell Hash: 0%, Fines (230): 14.02% (SC)
-13.2	8.2		Organic CLAY, some sand, little shell hash, firm clay, black (5Y-2.5/1), (OL). Clayey SAND, fine grained, quartz, little silt, trace organics, trace shell hash, dark gray (5Y-4/1), (SC).		5	Sample #5, Depth = 6.8' Mean (mm): 0.15, Phi Sorting: 0.88 Shell Hash: 0%, Fines (230): 6.65% (SW-SM)
-14.1	9.1		SAND, fine grained, quartz, trace clay, trace organics, trace shell hash, trace silt, clay distributed in laminae and pockets up to (2.0"x1.0"), (2.0"x1.0") shell fragment @ 6.4', 1.25" whole shell @ 7.1', (2.5"x0.5") worm tube @ 7.5', gray (5Y-5/1), (SW-SM).		4	
-15.0	10.0				6	Sample #6, Depth = 9.6' Mean (mm): 0.26, Phi Sorting: 1.12 Shell Hash: 2%, Fines (230): 2.93% (SW)
-16.0	11.0		Clayey SAND, fine grained, quartz, trace organics, trace shell fragments, trace shell hash, shell fragments up to 1.0", (1.0"x0.75") worm tube @ 9.0', dark gray (5Y-4/1), (SC). SAND, fine grained, quartz, trace organics, trace shell fragments, trace shell hash, trace silt, shell fragments up to 0.75", (2.0"x0.5") worm tube @ 9.9', gray (5Y-5/1), (SW). No Recovery. End of Boring			

0 5 10 15 20 25

FLORIDA DEP ROSS WPVC-09-01-06.GPJ JPBRAZIL.GDT 9/28/09

SAJ FORM 1836 **MODIFIED FOR THE FLORIDA DEP**
JUN 02 JUN 04

Boring Designation WPVC-09-05

DRILLING LOG

DIVISION	
INSTALLATION	
SHEET 1 OF 1 SHEETS	
1. PROJECT	Wiggins Pass 2009 Vibracores Collier County, FL
2. BORING DESIGNATION	WPVC-09-05
LOCATION COORDINATES	X = 383,865 Y = 711,530
3. DRILLING AGENCY	Athena
CONTRACTOR FILE NO.	
4. NAME OF DRILLER	Neal Wicker
5. DIRECTION OF BORING	☒ VERTICAL ☐ INCLINED
DEG. FROM VERTICAL	
BEARING	
6. THICKNESS OF OVERBURDEN	0.0 Ft.
7. DEPTH DRILLED INTO ROCK	0.0 Ft.
8. TOTAL DEPTH OF BORING	10.6 Ft.
9. SIZE AND TYPE OF BIT	3.0 In.
10. COORDINATE SYSTEM/DATUM	Florida State Plane East
HORIZONTAL	NAD 1983
VERTICAL	NAVD 88
11. MANUFACTURER'S DESIGNATION OF DRILL	Mechanical
☐ AUTO HAMMER ☐ MANUAL HAMMER	
12. TOTAL SAMPLES	
DISTURBED	
UNDISTURBED (UD)	
13. TOTAL NUMBER CORE BOXES	
14. ELEVATION GROUND WATER	
15. DATE BORING	STARTED 08-12-09 11:00
COMPLETED	08-12-09 11:02
16. ELEVATION TOP OF BORING	-2.2 Ft.
17. TOTAL RECOVERY FOR BORING	9.7 Ft.
18. SIGNATURE AND TITLE OF INSPECTOR	KD

ELEV. (ft)	DEPTH (ft)	LEGEND	CLASSIFICATION OF MATERIALS Depths and elevations based on measured values	% REC.	BOX OR SAMPLE	REMARKS Shell Hash calculated from visual estimate of shell <4.75mm and >2.8mm.
-2.2	0.0					
-3.2	1.0		Shelly SAND, fine grained, quartz, little shell fragments, trace silt, trace whole shell, shell component is shell hash, whole shells up to 2.0", shell fragments up to 1.75", 2 (1.25"x0.5") coral fragments @ 0.2', (1.75"x1.5") rock fragment @ 0.4', light gray (5Y-7/1), (GW).		1	Sample #1, Depth = 0.5' Mean (mm): 1.21, Phi Sorting: 2.23 Shell Hash: 9%, Fines (230): 0.89% (SW)
-5.0	2.8		SAND, fine grained, quartz, some shell hash, trace shell fragments, trace silt, trace whole shell, shell fragments up to 1.0", whole shells typically up to 1.25", (2.0"x1.75") whole shell @ 1.1', light gray (5Y-7/1), (SW).		2	Sample #2, Depth = 1.8' Mean (mm): 0.43, Phi Sorting: 1.85 Shell Hash: 6%, Fines (230): 1.19% (SW)
-8.4	6.2		SHELL HASH, little shell fragments, trace sand, trace silt, trace whole shell, shell fragments up to 1.75", whole shells up to 1.5", (2.5"x0.5") organic pocket @ 4.6', (2.0"x3.0") sand layer @ 4.7', 1.0" rock fragment @ 6.1', light gray (5Y-7/1), (GW).		3	Sample #3, Depth = 4.3' Mean (mm): 1.18, Phi Sorting: 2.49 Shell Hash: 9%, Fines (230): 1.42% (SW)
-8.9	6.7				4	Sample #4, Depth = 6.4' Mean (mm): 0.43, Phi Sorting: 1.62 Shell Hash: 4%, Fines (230): 4.66% (SW-SM)
-9.3	7.1				5	
-10.8	8.6		SAND, fine grained, quartz, some shell hash, trace organic clay, trace silt, 1.5" organic clay pocket @ 6.6', dark gray (5Y-4/1), (SW-SM).		6	Sample #5, Depth = 6.9' Mean (mm): 0.16, Phi Sorting: 0.54 Shell Hash: 0%, Fines (230): 10.09% (SP-SM)
-11.4	9.2				7	Sample #6, Depth = 7.6' Mean (mm): 0.17, Phi Sorting: 0.49 Shell Hash: 0%, Fines (230): 4.93% (SP-SM)
-11.9	9.7				8	
-12.8	10.6		Organic SAND, fine grained, quartz, little silt, trace clay, trace shell hash, black (5Y-2.5/1), (SP-SM).			Sample #7, Depth = 8.9' Mean (mm): 0.26, Phi Sorting: 1.52 Shell Hash: 3%, Fines (230): 6.90% (SW-SM)
			SAND, fine grained, quartz, trace shell hash, trace silt, trace clay pockets up to 0.5", dark gray (5Y-4/1), (SP-SM).			Sample #8, Depth = 9.5' Mean (mm): 0.16, Phi Sorting: 0.40 Shell Hash: 0%, Fines (230): 2.53% (SP)
			SAND, fine grained, quartz, little shell hash, trace shell fragments, trace silt, shell fragments up to 0.75", trace clay pockets up to 1.0", light gray (5Y-7/2), (SW-SM).			
			SAND, fine grained, quartz, trace silt, trace silty pockets up to 0.25", light gray (5Y-7/2), (SP).			
			No Recovery.			
			End of Boring			

0 5 10 15 20 25

FLORIDA DEP ROSS WPVC-09-01-06.GPJ JPBRAZIL.GDT 9/28/09

SAJ FORM 1836 JUN 02 **MODIFIED FOR THE FLORIDA DEP** JUN 04

Boring Designation WPVC-09-06

DRILLING LOG

DIVISION	
INSTALLATION	
SHEET 1 OF 1 SHEETS	
1. PROJECT	Wiggins Pass 2009 Vibracores Collier County, FL
2. BORING DESIGNATION	WPVC-09-06
LOCATION COORDINATES	X = 383,476 Y = 711,498
3. DRILLING AGENCY	Athena
CONTRACTOR FILE NO.	
4. NAME OF DRILLER	Neal Wicker
5. DIRECTION OF BORING	☒ VERTICAL ☐ INCLINED
DEG. FROM VERTICAL	
BEARING	
6. THICKNESS OF OVERBURDEN	0.0 Ft.
7. DEPTH DRILLED INTO ROCK	0.0 Ft.
8. TOTAL DEPTH OF BORING	10.0 Ft.
9. SIZE AND TYPE OF BIT	3.0 In.
10. COORDINATE SYSTEM/DATUM	Florida State Plane East
HORIZONTAL	NAD 1983
VERTICAL	NAVD 88
11. MANUFACTURER'S DESIGNATION OF DRILL	Mechanical
☐ AUTO HAMMER ☐ MANUAL HAMMER	
12. TOTAL SAMPLES	
DISTURBED	
UNDISTURBED (UD)	
13. TOTAL NUMBER CORE BOXES	
14. ELEVATION GROUND WATER	
15. DATE BORING	STARTED 08-12-09 11:24
COMPLETED	08-12-09 11:26
16. ELEVATION TOP OF BORING	-4.7 Ft.
17. TOTAL RECOVERY FOR BORING	9.3 Ft.
18. SIGNATURE AND TITLE OF INSPECTOR	KD

ELEV. (ft)	DEPTH (ft)	LEGEND	CLASSIFICATION OF MATERIALS Depths and elevations based on measured values	% REC.	BOX OR SAMPLE	REMARKS Shell Hash calculated from visual estimate of shell <4.75mm and >2.8mm.
-4.7	0.0					
-5.7	1.0		SAND, fine grained, quartz, little shell hash, trace shell fragments, trace silt, trace whole shell, whole shells up to 1.0", shell fragments up to 0.75", light gray (5Y-7/1), (SW).		1	Sample #1, Depth = 0.5' Mean (mm): 0.28, Phi Sorting: 1.17 Shell Hash: 2%, Fines (230): 1.41% (SW)
-7.5	2.8		SHELL HASH, little shell fragments, trace sand, trace silt, trace whole shell, shell fragments typically up to 1.0", whole shells up to 1.5", (3.0"x2.0") shell fragment @ 1.1', 1.25" rock fragment @ 1.6', (2.0"x1.5") shell fragments @ 2.0' and 2.2', gray (5Y-6/1), (GW).		2	Sample #2, Depth = 1.9' Mean (mm): 2.07, Phi Sorting: 1.96 Shell Hash: 12%, Fines (230): 0.77% (SW)
-8.2	3.5				3	Sample #3, Depth = 3.2' Mean (mm): 0.15, Phi Sorting: 0.95 Shell Hash: 0%, Fines (230): 2.70% (SW)
-9.6	4.9				4	Sample #4, Depth = 4.1' Mean (mm): 0.16, Phi Sorting: 0.65 Shell Hash: 0%, Fines (230): 5.19% (SP-SM)
-11.0	6.3		SAND, fine grained, quartz, trace organics, trace shell fragments, trace shell hash, trace silt, shell fragments typically up to 0.75", (1.5"x1.25") shell fragments @ 2.9' and 3.2', gray (5Y-6/1), (SW).			
-11.7	7.0				4	
-13.2	8.5		SAND, fine grained, quartz, trace organic clay, trace shell hash, trace silt, 2.0" organic clay pocket @ 3.6', (1.0"x1.5") organic clay pocket @ 4.4', very dark gray (5Y-3/1), (SP-SM).		5	Sample #5, Depth = 7.8' Mean (mm): 0.16, Phi Sorting: 0.49 Shell Hash: 0%, Fines (230): 3.01% (SP)
-13.7	9.0				4	
-14.0	9.3		Organic CLAY, trace shell hash, trace sand pockets up to 1.0", black (5Y-2.5/1), (OL).			
-14.7	10.0		SAND, fine grained, quartz, trace organic clay, trace silt, very dark gray (5Y-3/1), (SP-SM). SAND, fine grained, quartz, trace organics, trace silt, dark gray (5Y-4/1), (SP). SAND, fine grained, quartz, trace organic clay, trace silt, gray (5Y-6/1), (SP-SM). CLAY, trace shell hash, clay partially lithified, rock refusal @ 10.0', gray (5Y-6/1), (CL). No Recovery.			

End of Boring

0 5 10 15 20 25

FLORIDA DEP ROSS WPVC-09-01-06.GPJ JPBRAZIL.GDT 9/28/09

SAJ FORM 1836 **MODIFIED FOR THE FLORIDA DEP**
JUN 02 JUN 04

2011 CPE Vibracores

Coastal Planning & Engineering, Inc.
2481 N.W. Boca Raton Blvd.
Boca Raton, Florida 33431
Phone # 1-561-391-8102

Legend for Geotechnical Data

(SP), (SM), etc. — Refers to the Army Corps of Engineers Unified Soils Classification System. Class types are defined primarily by grain size, sorting and percent of material passing the 200 sieve. Classification of materials on the core logs based on visual field examinations are identified on the core logs under the Classification of Materials Description. Classifications based on laboratory sieve analyses are identified on the core logs in the Legend and under Remarks.

Grain Size Terms

Cobble – retained on the 3.0" sieve

Gravel – greater than the #4 sieve and less than the 3.0" sieve
- Coarse: greater than the ¾" sieve and less than the 3.0" sieve
- Fine – greater than the #4 sieve and less than the ¾" sieve

Sand - greater than the #200 sieve and less than the #4 sieve
- Coarse - greater than the #10 sieve and less than the #4 sieve
- Medium - greater than the #40 sieve and less than the #10 sieve
- Fine - greater than the #230 sieve and less than the #40 sieve

Fines – (silt or clay) passing the #230 sieve

Proportional definition of descriptive terms

Descriptive Term	Range of Proportions
Sandy, gravelly, etc.	35 % to 50 %
Some	20 % to 35 %
Little	10 % to 20 %
Trace	1 % to 10 %

Note: Information is after ACOE Atlantic Division Manual # 1110-1-1 titled *Engineering and Design Geotechnical Manual for Surface and Subsurface Investigations*

Coastal Planning & Engineering, Inc.
2481 N.W. Boca Raton Blvd.
Boca Raton, Florida 33431
Phone # 1-561-391-8102

Legend for Geotechnical Data

GW	Well graded gravels or gravel-sand mixtures, little or no fines	ML	Inorganic silts and very fine sands, rock flour, sandy silts or clayey silts with slight plasticity
GP	Poorly graded gravels or gravel-sand mixtures, w/ little or no fines	MH	Inorganic silts, micaceous or diatomaceous fine sandy or silty soild, elastic silts
GM	Silty gravels, gravel-sand-silt mixtures	OL	Organic silts and organic silt-clays of low plasticity
GC	Clayey gravels, gravel-sand-clay mixtures	OH	Organic clays of medium to high plasticity, organic silts
SW	Well graded sands or gravelly sands, little or no fines	CL	Inorganic clays of low to medium plasticity, gravelly clays, sandy clays, silty clays, lean clays
SP	Poorly graded sands or gravelly sands, little or no fines	CH	Inorganic clays of high plasticity, fat clays
SM	Silty sands, sand-silt mixtures	PT	Peat and other highly organic soils
SC	Clayey sands, sand-clay mixtures	SP-SM	Poorly-graded silty sand
SW-SM	Well-graded silty sand	SM-SC	Silty clayey sand
GW-GM	Well-graded silty gravel	ML-CL	Inorganic silty lean clay
GM-GC	Clayey silty gravel		

Note: Information is after ACOE Atlantic Division Manual # 1110-1-1 titled *Engineering and Design Geotechnical Manual for Surface and Subsurface Investigations*

Coastal Planning & Engineering, Inc.
2481 N.W. Boca Raton Blvd.
Boca Raton, Florida 33431
Phone # 1-561-391-8102

Legend for Geotechnical Data

The naming convention used by Coastal Planning and Engineering incorporates key information about the item in the title. The naming format uses the following information:

- Abbreviated area name (two letters that will be used throughout the project)
- Abbreviated data type: jet probe (JP), vibracore (VC) or surface sample (SS)
- Collection year (YY)
- Identification number
- Sample or composite identification in the case of jet probes or vibracores. Composite samples are indicated by COMP following the identification number. COMP represents a composite developed to characterize beach compatible material.

Format examples:

A) WPVC-09-03

B) WPVC-11-06 S#1

Example A is vibracore number 03, collected in the Wiggins Pass area of Collier County in the year 2009.

Example B refers to sample number 1 taken from vibracore number 06, which was collected in the Wiggins Pass area of Collier County in 2011.

Note: Information is after ACOE Atlantic Division Manual # 1110-1-1 titled *Engineering and Design Geotechnical Manual for Surface and Subsurface Investigations*

Boring Designation WPVC-11-01

DRILLING LOG

DIVISION	
INSTALLATION	
SHEET 1 OF 1 SHEETS	
1. PROJECT	Wiggins Pass Inlet Management, Collier County, FL
2. BORING DESIGNATION	WPVC-11-01
LOCATION COORDINATES	X = 384,207 Y = 711,485
3. DRILLING AGENCY	Athena Technologies, Inc.
CONTRACTOR FILE NO.	
4. NAME OF DRILLER	Palmer McLellan
5. DIRECTION OF BORING	☒ VERTICAL ☐ INCLINED
DEG. FROM VERTICAL	
BEARING	
6. THICKNESS OF OVERBURDEN	0.0 Ft.
7. DEPTH DRILLED INTO ROCK	0.0 Ft.
8. TOTAL DEPTH OF BORING	20.0 Ft.
9. SIZE AND TYPE OF BIT	3.0 In.
10. COORDINATE SYSTEM/DATUM	Florida State Plane East
HORIZONTAL	NAD 1983
VERTICAL	NAVD 88
11. MANUFACTURER'S DESIGNATION OF DRILL	Electric
☐ AUTO HAMMER ☐ MANUAL HAMMER	
12. TOTAL SAMPLES	
DISTURBED	
UNDISTURBED (UD)	
13. TOTAL NUMBER CORE BOXES	
14. ELEVATION GROUND WATER	
15. DATE BORING	STARTED 08-17-11 14:04
COMPLETED	08-17-11 14:06
16. ELEVATION TOP OF BORING	-3.3 Ft.
17. TOTAL RECOVERY FOR BORING	17.8 Ft.
18. SIGNATURE AND TITLE OF INSPECTOR	KD/BF

ELEV. (ft)	DEPTH (ft)	LEGEND	CLASSIFICATION OF MATERIALS Depths and elevations based on measured values	% REC.	BOX OR SAMPLE	REMARKS (Shell Hash calculated from visual estimate of shell <4.75mm and >2.8mm.)
-3.3	0.0					
-3.8	0.5		SAND, fine grained, quartz, little shell hash, trace shell fragments, trace silt, trace whole shell, whole shells up to (2"x1.5"), shell frags. up to (1"x0.5"), (0.75"x0.25") coral frag. @ 0.3', gray (2.5Y-6/1), (SW).		1	Sample #1, Depth = 0.3' Mean (mm): 0.34, Phi Sorting: 1.59 Fines (230): 0.85% (SW)
-5.7	2.4		SAND, fine grained, quartz, trace shell fragments, trace shell hash, trace silt, shell frags. up to 0.75", (1"x0.75") whole shell @ 2.3', light gray (2.5Y-7/1), (SP).		2	Sample #2, Depth = 1.5' Mean (mm): 0.17, Phi Sorting: 0.69 Fines (230): 1.34% (SP)
-9.2	5.9		SAND, fine grained, quartz, little shell hash, trace shell fragments, trace silt, trace whole shell, trace wood, whole shells up to 1.5", shell frags. up to (2"x1"), (1.25"x1") rock frag. @ 2.6', (1"x0.5") rock frag. @ 3', wood frags. up to 0.5" @ 4.5', shell hash increases with depth, gray (2.5Y-6/1), (SW).		3	Sample #3, Depth = 4.5' Mean (mm): 0.35, Phi Sorting: 1.61 Fines (230): 1.00% (SW)
-10.2	6.9				4	Sample #4, Depth = 6.5' Mean (mm): 0.25, Phi Sorting: 1.89 Fines (230): 17.18% (SC)
-11.7	8.4		SAND, fine grained, quartz, little clay, trace shell fragments, trace shell hash, trace whole shell, shell frags. and whole shells typically up to 0.75", (2.5"x2") whole shell and (3"x2") shell frag. @ 6.1', black (2.5Y-2.5/1), (SC).		5	Sample #5, Depth = 7.5' Mean (mm): 0.18, Phi Sorting: 0.96 Fines (230): 13.77% (SC)
-12.5	9.2					
-13.6	10.3		SAND, little clay, trace shell fragments, trace shell hash, trace wood, shell and wood frags. typically up to 0.5", (2.5"x1") wood frag. @ 7.9', black (2.5Y-2.5/1), (SC).			
-14.8	11.5					
-15.2	11.9		Gravely SAND, fine grained, quartz, some shell hash, trace clay, trace shell fragments, trace silt, trace whole shell, gravel component is rock up to 3", shell frags. up to 1", whole shells up to 0.5", light brownish gray (2.5Y-6/2), (GW).			
-17.8	14.5		SAND, fine grained, quartz, trace clay, trace shell fragments, trace shell hash, trace silt, trace whole shell, clay distrib. in clayey pockets up to (2"x0.75"), whole shells up to 0.75", shell frags. up to 0.5", light gray (2.5Y-7/2), (SW).			
-19.6	16.3		SAND, fine grained, quartz, trace clay, trace shell fragments, trace shell hash, clay distrib. in clayey pockets up to 0.25", shell frags. up to 0.75", light gray (2.5Y-7/1), (SP).			
-21.1	17.8		SAND, fine grained, quartz, trace silt, grayish brown (10YR-5/2), (SP).			
-23.3	20.0		SAND, fine grained, quartz, little silt, trace clay, clay distrib. in pockets up to 0.5", dark olive brown (2.5Y-3/3), (SP-SM).			
			SAND, fine grained, quartz, trace clay, trace silt, clay and silt distrib. in laminae, light gray (2.5Y-7/2), (SP).			
			CLAY, little sand, soft clay, sand distrib. in laminae, color is mottled gray (5Y-5/1) and, olive yellow (2.5Y-6/6), (CL).			
			No Recovery.			

End of Boring

FLORIDA DEP ROSS_WIGGINS_PASS_2011_VCS.GPJ FL DEP ROSS.GDT 9/9/11

SAJ FORM 1836 JUN 02 **MODIFIED FOR THE FLORIDA DEP** JUN 04

Boring Designation WPVC-11-02

DRILLING LOG

DIVISION	
INSTALLATION	
SHEET 1 OF 1 SHEETS	
1. PROJECT	Wiggins Pass Inlet Management, Collier County, FL
2. BORING DESIGNATION	WPVC-11-02
LOCATION COORDINATES	X = 383,679 Y = 711,568
3. DRILLING AGENCY	Athena Technologies, Inc.
CONTRACTOR FILE NO.	
4. NAME OF DRILLER	Palmer McLellan
5. DIRECTION OF BORING	☒ VERTICAL ☐ INCLINED
DEG. FROM VERTICAL	
BEARING	
6. THICKNESS OF OVERBURDEN	0.0 Ft.
7. DEPTH DRILLED INTO ROCK	0.0 Ft.
8. TOTAL DEPTH OF BORING	10.0 Ft.
9. SIZE AND TYPE OF BIT	3.0 In.
10. COORDINATE SYSTEM/DATUM	Florida State Plane East
HORIZONTAL	NAD 1983
VERTICAL	NAVD 88
11. MANUFACTURER'S DESIGNATION OF DRILL	Electric
☐ AUTO HAMMER ☐ MANUAL HAMMER	
12. TOTAL SAMPLES	
DISTURBED	
UNDISTURBED (UD)	
13. TOTAL NUMBER CORE BOXES	
14. ELEVATION GROUND WATER	
15. DATE BORING	STARTED 08-16-11 15:16
COMPLETED	08-16-11 15:17
16. ELEVATION TOP OF BORING	-3.4 Ft.
17. TOTAL RECOVERY FOR BORING	6 Ft.
18. SIGNATURE AND TITLE OF INSPECTOR	BF

ELEV. (ft)	DEPTH (ft)	LEGEND	CLASSIFICATION OF MATERIALS (Depths and elevations based on measured values)	% REC.	BOX OR SAMPLE	REMARKS (Shell Hash calculated from visual estimate of shell <4.75mm and >2.8mm.)
-3.4	0.0					
-3.8	0.4		Shelly SAND, fine grained, quartz, little silt, shell component is shell hash, whole shells up to 2.0" and shell fragments up to 1.5", gray (5Y-6/1), (SM).		1	Sample #1, Depth = 0.2'
-4.2	0.8				2	Mean (mm): 0.60, Phi Sorting: 1.98
						Fines (230): 12.30% (SM)
					3	Sample #2, Depth = 0.6'
			SAND, fine grained, little shell hash, trace shell fragments, trace silt, shell fragments up to 0.5", gray (5Y-6/1), (SW).			Mean (mm): 0.31, Phi Sorting: 1.34
-6.1	2.7					Fines (230): 0.98% (SW)
-6.6	3.2				4	Sample #3, Depth = 1.7'
-7.0	3.6		Shelly SAND, fine grained, quartz, trace rock fragments, trace silt, shell component is shell hash, shell fragments and whole shells up to 2.0", rock fragments typically up to 1.5", (3.0"x2.0") rock fragment @ 1.5', gray (2.5Y-6/1), (SW).		5	Mean (mm): 2.17, Phi Sorting: 2.20
						Fines (230): 0.53% (SW)
					6	Sample #4, Depth = 3.0'
-8.6	5.2					Mean (mm): 0.13, Phi Sorting: 0.55
-9.4	6.0				7	Fines (230): 3.01% (SP)
			SAND, fine grained, quartz, trace clay, trace silt, trace whole shell, trace wood, whole shells up to 0.5", clay distributed in pockets up to 0.25", wood fragments typically up to 0.5", 1.5" clayey pocket @ 2.8', 1.0" wood fragment @ 3.0', grayish brown (2.5Y-5/2), (SP).			Sample #5, Depth = 3.4'
						Mean (mm): 0.13, Phi Sorting: 0.62
						Fines (230): 13.07% (SC)
						Sample #6, Depth = 4.2'
						Mean (mm): 0.14, Phi Sorting: 0.68
						Fines (230): 14.42% (SC)
						Sample #7, Depth = 5.5'
						Mean (mm): 0.15, Phi Sorting: 0.60
-13.4	10.0		SAND, fine grained, quartz, little clay, trace silt, black (5Y-2.5/1), (SC).			Fines (230): 6.01% (SP-SC)
			SAND, fine grained, quartz, little clay, little silt, trace shell hash, 2.0" shelly pockets @ 3.8' and 4.4', shell component is shell hash and shell fragments up to 2.0", black (5Y-2.5/1), (SC).			
			SAND, fine grained, quartz, trace clay, trace silt, color is mottled dark gray (5Y-4/1) and, black (5Y-2.5/1), (SP-SC).			
			No Recovery.			
			End of Boring			

0 5 10 15 20 25

FLORIDA DEP ROSS WIGGINS_PASS_2011_VCS.GPJ FL DEP ROSS.GDT 9/9/11

SAJ FORM 1836 JUN 02 **MODIFIED FOR THE FLORIDA DEP** JUN 04

Boring Designation WPVC-11-03

DRILLING LOG

DIVISION	
INSTALLATION	
SHEET 1 OF 1 SHEETS	
1. PROJECT	Wiggins Pass Inlet Management, Collier County, FL
2. BORING DESIGNATION	WPVC-11-03
LOCATION COORDINATES	X = 383,808 Y = 711,843
3. DRILLING AGENCY	Athena Technologies, Inc.
CONTRACTOR FILE NO.	
4. NAME OF DRILLER	Palmer McLellan
5. DIRECTION OF BORING	☒ VERTICAL ☐ INCLINED
DEG. FROM VERTICAL	
BEARING	
6. THICKNESS OF OVERBURDEN	0.0 Ft.
7. DEPTH DRILLED INTO ROCK	0.0 Ft.
8. TOTAL DEPTH OF BORING	16.0 Ft.
9. SIZE AND TYPE OF BIT	3.0 In.
10. COORDINATE SYSTEM/DATUM	Florida State Plane East
HORIZONTAL	NAD 1983
VERTICAL	NAVD 88
11. MANUFACTURER'S DESIGNATION OF DRILL	Electric
☐ AUTO HAMMER ☐ MANUAL HAMMER	
12. TOTAL SAMPLES	
DISTURBED	
UNDISTURBED (UD)	
13. TOTAL NUMBER CORE BOXES	
14. ELEVATION GROUND WATER	
15. DATE BORING	STARTED 08-17-11 12:46
COMPLETED	08-17-11 12:48
16. ELEVATION TOP OF BORING	-3.0 Ft.
17. TOTAL RECOVERY FOR BORING	12.8 Ft.
18. SIGNATURE AND TITLE OF INSPECTOR	KD/LC

ELEV. (ft)	DEPTH (ft)	LEGEND	CLASSIFICATION OF MATERIALS Depths and elevations based on measured values	% REC.	BOX OR SAMPLE	REMARKS (Shell Hash calculated from visual estimate of shell <4.75mm and >2.8mm.)
-3.0	0.0					
-4.2	1.2		SAND, fine grained, quartz, trace shell fragments, trace silt, trace whole shell, shell fragments up to (1.5"x0.5"), whole shells up to (1.0"x0.75"), gray (5Y-6/1), (SP).		1	Sample #1, Depth = 0.6' Mean (mm): 0.15, Phi Sorting: 0.60 Fines (230): 1.76% (SP)
-5.2	2.2		SAND, fine grained, quartz, some shell hash, trace shell fragments, trace silt, trace whole shell, shell fragments up to (1.75"x1.0"), whole shells up to (1.75"x1.25"), light gray (2.5Y-7/2), (SW).		2	Sample #2, Depth = 1.6' Mean (mm): 0.40, Phi Sorting: 1.96 Fines (230): 0.94% (SW)
-6.4	3.4				3	Sample #3, Depth = 2.8' Mean (mm): 0.62, Phi Sorting: 1.62 Fines (230): 1.75% (SW)
-6.8	3.8				4	Sample #4, Depth = 3.6' Mean (mm): 0.16, Phi Sorting: 0.85 Fines (230): 14.69% (SM)
			SAND, fine grained, quartz, some shell hash, trace silt, trace whole shell, whole shells up to (1.0"x0.5"), 0.5" wood fragment @ 3.4', (3.0"x1.0") silt pocket @ 2.3', shell increases with depth, silt decreases with depth, light brownish gray (2.5Y-6/2), (SW).		5	Sample #5, Depth = 7.0' Mean (mm): 0.25, Phi Sorting: 1.96 Fines (230): 13.60% (SC)
			SAND, little silt, trace clay, trace shell hash, dark gray (2.5Y-4/1), (SM).			
-12.6	9.6		SAND, little clay, trace shell fragments, trace shell hash, trace silt, trace whole shell, whole shells up to (1.25"x0.5"), shell fragments up to (1.0"x1.25"), very dark gray (2.5Y-3/1), (SC).			
-13.4	10.4		SAND, fine grained, quartz, little shell hash, little silt, trace clay, trace rock fragments, trace shell fragments, clay distributed in pockets up to 1.5", rock fragments up to (2.5"x2.0"), shell fragments up to 0.5", grayish brown (2.5Y-5/2), (GM).			
-15.8	12.8		SAND, fine grained, quartz, trace silt, silt distributed in pockets up to 1.0" and laminae, color is mottled light gray (2.5Y-7/1) and, grayish brown (10YR-5/2), (SP). No Recovery.			
-19.0	16.0		End of Boring			

0 5 10 15 20 25

FLORIDA DEP ROSS WIGGINS_PASS_2011_VCS.GPJ FL DEP ROSS.GDT 9/9/11

SAJ FORM 1836 JUN 02 **MODIFIED FOR THE FLORIDA DEP** JUN 04

Boring Designation WPVC-11-04

DRILLING LOG

DIVISION	
INSTALLATION	
SHEET 1 OF 1 SHEETS	
1. PROJECT	Wiggins Pass Inlet Management, Collier County, FL
2. BORING DESIGNATION	WPVC-11-04
LOCATION COORDINATES	X = 383,827 Y = 711,653
3. DRILLING AGENCY	Athena Technologies, Inc.
CONTRACTOR FILE NO.	
4. NAME OF DRILLER	Palmer McLellan
5. DIRECTION OF BORING	☒ VERTICAL ☐ INCLINED
DEG. FROM VERTICAL	
BEARING	
6. THICKNESS OF OVERBURDEN	0.0 Ft.
7. DEPTH DRILLED INTO ROCK	0.0 Ft.
8. TOTAL DEPTH OF BORING	20.0 Ft.
9. SIZE AND TYPE OF BIT	3.0 In.
10. COORDINATE SYSTEM/DATUM	Florida State Plane East
HORIZONTAL	NAD 1983
VERTICAL	NAVD 88
11. MANUFACTURER'S DESIGNATION OF DRILL	Electric
☐ AUTO HAMMER ☐ MANUAL HAMMER	
12. TOTAL SAMPLES	
DISTURBED	
UNDISTURBED (UD)	
13. TOTAL NUMBER CORE BOXES	
14. ELEVATION GROUND WATER	
15. DATE BORING	STARTED 08-17-11 13:16
COMPLETED	08-17-11 13:18
16. ELEVATION TOP OF BORING	-3.0 Ft.
17. TOTAL RECOVERY FOR BORING	16.4 Ft.
18. SIGNATURE AND TITLE OF INSPECTOR	BF

ELEV. (ft)	DEPTH (ft)	LEGEND	CLASSIFICATION OF MATERIALS Depths and elevations based on measured values	% REC.	BOX OR SAMPLE	REMARKS Shell Hash calculated from visual estimate of shell <4.75mm and >2.8mm.
-3.0	0.0					
-4.5	1.5		SHELL HASH, little whole shell, trace sand, trace shell fragments, trace silt, whole shells and shell fragments typically up to 2.0", (3.0"x1.5") and (3.0"x2.5") shell fragments @ 1.1', gray (2.5Y-6/1), (SW).		1	Sample #1, Depth = 0.8' Mean (mm): 1.87, Phi Sorting: 2.39 Fines (230): 0.66% (SW)
-5.5	2.5				2	Sample #2, Depth = 2.1' Mean (mm): 0.15, Phi Sorting: 0.59 Fines (230): 10.24% (SM)
-6.0	3.0		SAND, fine grained, quartz, trace clay, trace shell hash, trace silt, 1.0" clay pocket at top of layer, 2.5" whole shell @ 2.2', dark gray (5Y-4/1), (SM).		3	
-6.6	3.6				4	Sample #3, Depth = 2.7' Mean (mm): 0.16, Phi Sorting: 1.08 Fines (230): 50.73%
-8.7	5.7		PEAT, trace sand, very dark brown (10YR-2/2), (PT). SAND, trace clay, trace shell hash, trace silt, trace wood, wood fragments up to 1.0", black (5Y-2.5/2), (SM).		5	Sample #4, Depth = 3.2' Mean (mm): 0.14, Phi Sorting: 0.66 Fines (230): 9.88% (SM)
-11.4	8.4		SAND, fine grained, quartz, little clay, trace shell hash, trace whole shell, whole shells up to 0.5", 2.0" shelly pocket @ 5.0', shell component is shell hash and shell fragments up to 2.0", (5.0"x0.5") wood fragment @ 4.6', olive gray (5Y-4/2), (SC).		6	Sample #5, Depth = 4.3' Mean (mm): 0.16, Phi Sorting: 1.01 Fines (230): 14.92% (SC) Sample #6, Depth = 7.3' Mean (mm): 0.15, Phi Sorting: 0.57 Fines (230): 4.10% (SP-SC)
-12.0	9.0				7	Sample #7, Depth = 8.7' Mean (mm): 0.15, Phi Sorting: 0.54 Fines (230): 18.63% (SM)
-16.4	13.4		SAND, fine grained, quartz, trace clay, trace silt, trace wood, clay distributed in pockets up to 0.75", wood fragments up to 0.5", color is mottled grayish brown (2.5Y-5/2) and, black (5Y-2.5/1), (SP-SC). SAND, fine grained, quartz, little silt, trace clay, dark olive gray (5Y-3/2), (SM).		8	Sample #8, Depth = 11.3' Mean (mm): 0.22, Phi Sorting: 0.39 Fines (230): 5.12% (SP-SM)
-18.4	15.4		SAND, fine grained, quartz, trace clay, trace silt, trace wood, clay distributed in pockets up to 1.0", wood fragments up to 0.25", silt decreases with depth, color is mottled light gray (2.5Y-7/2), light olive brown (2.5Y-5/3) and, olive brown (2.5Y-4/3), (SP-SM).			
-19.4	16.4		SAND, fine grained, some coral, little rock fragments, sand is quartz and carbonate, coral fragments up to 3.0", color is mottled pale yellow (5Y-8/2) and, grayish brown (2.5Y-5/2), (GW).		8	
-23.0	20.0		SAND, fine grained, quartz, trace clay, trace silt, trace wood, clay distributed in pockets up to 1.0", wood fragments up to 0.25", color is mottled light gray (2.5Y-7/2), light olive brown (2.5Y-5/3) and, olive brown (2.5Y-4/3), (SP-SM). No Recovery.			
			End of Boring			

0 5 10 15 20 25

FLORIDA DEP ROSS WIGGINS PASS_2011_VCS.GPJ FL DEP ROSS.GDT 9/9/11

SAJ FORM 1836 **MODIFIED FOR THE FLORIDA DEP**
JUN 02 JUN 04

Boring Designation WPVC-11-05

DRILLING LOG

DIVISION		INSTALLATION	SHEET 1 OF 1 SHEETS
1. PROJECT: Wiggins Pass Inlet Management, Collier County, FL		9. SIZE AND TYPE OF BIT: 3.0 In.	
		10. COORDINATE SYSTEM/DATUM: Florida State Plane East	HORIZONTAL: NAD 1983 / VERTICAL: NAVD 88
2. BORING DESIGNATION: WPVC-11-05	LOCATION COORDINATES: X = 383,851 Y = 711,458	11. MANUFACTURER'S DESIGNATION OF DRILL: Electric	☐ AUTO HAMMER ☐ MANUAL HAMMER
3. DRILLING AGENCY: Athena Technologies, Inc.	CONTRACTOR FILE NO.	12. TOTAL SAMPLES	DISTURBED / UNDISTURBED (UD)
4. NAME OF DRILLER: Palmer McLellan		13. TOTAL NUMBER CORE BOXES	
5. DIRECTION OF BORING: ☒ VERTICAL ☐ INCLINED	DEG. FROM VERTICAL / BEARING	14. ELEVATION GROUND WATER	
		15. DATE BORING	STARTED: 08-17-11 07:45 / COMPLETED: 08-17-11 07:46
6. THICKNESS OF OVERBURDEN: 0.0 Ft.		16. ELEVATION TOP OF BORING: -4.7 Ft.	
7. DEPTH DRILLED INTO ROCK: 0.0 Ft.		17. TOTAL RECOVERY FOR BORING: 10.3 Ft.	
8. TOTAL DEPTH OF BORING: 12.0 Ft.		18. SIGNATURE AND TITLE OF INSPECTOR: BF	

ELEV. (ft)	DEPTH (ft)	LEGEND	CLASSIFICATION OF MATERIALS (Depths and elevations based on measured values)	% REC.	BOX OR SAMPLE	REMARKS (Shell Hash calculated from visual estimate of shell <4.75mm and >2.8mm.)
-4.7	0.0					
-11.3	6.6		SHELL HASH, some sand, little shell fragments, trace rock fragments, trace silt, trace whole shell, shell fragments typically up to 1.75", whole shells up to 2.0", rock fragments typically up to 1.0", (4.0"x1.5") shell fragment @ 1.0', (1.25"x0.25") coral fragment @ 3.3', (2.25"x1.0") coral fragment @ 4.0', (2.0"x1.25") rock fragment @ 5.1', gray (2.5Y-5/1), (SW).		1	Sample #1, Depth = 3.0' Mean (mm): 0.74, Phi Sorting: 1.71 Fines (230): 0.94% (SW)
-13.3	8.6		SAND, fine grained, quartz, trace silt, trace wood, silt distributed in pockets up to 0.5", wood fragments up to 0.25", 3.0" shelly pocket @ 6.8', shell component is shell hash, shell fragments and whole shells up to 1.0", grayish brown (2.5Y-5/2), (SP-SM).		2	Sample #2, Depth = 7.6' Mean (mm): 0.15, Phi Sorting: 0.37 Fines (230): 5.30% (SP-SM) Sample #3, Depth = 9.0' Mean (mm): 0.14, Phi Sorting: 0.31 Fines (230): 3.61% (SP)
-14.1	9.4				3	
-15.0	10.3		SAND, fine grained, quartz, trace silt, trace wood, wood fragments up to (0.5"x0.25"), light brownish gray (2.5Y-6/2), (SP).			
-16.7	12.0		Gravely SAND, fine grained, quartz, little silt, trace shell hash, gravel component is rock fragments up to (2.5"x1.5"), gray (5Y-5/1), (GW).			
			No Recovery.			
			End of Boring			

0 5 10 15 20 25

FLORIDA DEP ROSS_WIGGINS_PASS_2011_VCS.GPJ FL DEP ROSS.GDT 9/9/11

SAJ FORM 1836 JUN 02 **MODIFIED FOR THE FLORIDA DEP** JUN 04

Boring Designation WPVC-11-06

DRILLING LOG

DIVISION	
INSTALLATION	
SHEET 1 OF 1 SHEETS	
1. PROJECT	Wiggins Pass Inlet Management, Collier County, FL
2. BORING DESIGNATION	WPVC-11-06
LOCATION COORDINATES	X = 383,866 Y = 711,309
3. DRILLING AGENCY	Athena Technologies, Inc.
CONTRACTOR FILE NO.	
4. NAME OF DRILLER	Palmer McLellan
5. DIRECTION OF BORING	☒ VERTICAL ☐ INCLINED
DEG. FROM VERTICAL	
BEARING	
6. THICKNESS OF OVERBURDEN	0.0 Ft.
7. DEPTH DRILLED INTO ROCK	0.0 Ft.
8. TOTAL DEPTH OF BORING	20.0 Ft.
9. SIZE AND TYPE OF BIT	3.0 In.
10. COORDINATE SYSTEM/DATUM	Florida State Plane East
HORIZONTAL	NAD 1983
VERTICAL	NAVD 88
11. MANUFACTURER'S DESIGNATION OF DRILL	Electric
☐ AUTO HAMMER ☐ MANUAL HAMMER	
12. TOTAL SAMPLES	
DISTURBED	
UNDISTURBED (UD)	
13. TOTAL NUMBER CORE BOXES	
14. ELEVATION GROUND WATER	
15. DATE BORING	STARTED 08-17-11 08:22
COMPLETED	08-17-11 08:24
16. ELEVATION TOP OF BORING	-5.2 Ft.
17. TOTAL RECOVERY FOR BORING	16.6 Ft.
18. SIGNATURE AND TITLE OF INSPECTOR	BF

ELEV. (ft)	DEPTH (ft)	LEGEND	CLASSIFICATION OF MATERIALS Depths and elevations based on measured values	% REC.	BOX OR SAMPLE	REMARKS (Shell Hash calculated from visual estimate of shell <4.75mm and >2.8mm.)
-5.2	0.0					
-9.5	4.3		SAND, fine grained, quartz, little shell hash, trace shell fragments, trace silt, trace whole shell, whole shells up to 1.0", shell fragments typically up to 1.25", shell hash increases with depth, (2.25"x1.75") shell fragment @ 4.0', gray (5Y-6/1), (SW).		1	Sample #1, Depth = 2.0' Mean (mm): 0.26, Phi Sorting: 0.97 Fines (230): 1.09% (SW)
-10.6	5.4		SHELL HASH, little sand, little shell fragments, trace silt, trace whole shell, shell fragments up to 1.5", whole shells up to 2.0", gray (2.5Y-5/1), (SW).		2	Sample #2, Depth = 4.9' Mean (mm): 1.10, Phi Sorting: 1.82 Fines (230): 0.67% (SW)
-11.0	5.8				1	
-13.2	8.0		SAND, fine grained, quartz, little shell hash, trace shell fragments, trace silt, trace whole shell, shell hash increases with depth, whole shells up to 1.0", shell fragments up to 1.25", gray (5Y-6/1), (SW).		3	Sample #3, Depth = 6.8' Mean (mm): 2.81, Phi Sorting: 1.61 Fines (230): 1.22% (SW)
-18.8	13.6		SHELL HASH, little shell fragments, trace rock fragments, trace sand, trace silt, trace whole shell, 1.0" clay pocket @ 7.0', whole shells up to 1.25", shell fragments typically up to 1.0", (2.5"x1.0") shell fragment @ 7.5', rock fragments up to 0.5", gray (2.5Y-6/1), (SW). SAND, fine grained, quartz, trace clay, trace silt, clay distributed in pockets typically up to 0.25", 2.0" clayey layer @ 12.2', 2.0" very dark grayish brown (2.5Y-3/2) sand layer @ 13.4', color is mottled light gray (2.5Y-7/1), light gray (2.5Y-7/2) and, light brownish gray (2.5Y-6/2), (SP).		4	Sample #4, Depth = 10.5' Mean (mm): 0.24, Phi Sorting: 0.40 Fines (230): 2.22% (SP)
-19.7	14.5				5	Sample #5, Depth = 14.1' Mean (mm): 0.15, Phi Sorting: 0.57 Fines (230): 43.85% (SC)
-21.8	16.6		Clayey SAND, fine grained, quartz, trace silt, dark gray (5Y-4/1), (SC). SAND, fine grained, quartz, trace clay, trace silt, silt distributed in laminae, clay distributed in laminae and pockets up to 0.5", grayish brown (2.5Y-5/2), (SP-SM).		6	Sample #6, Depth = 15.6' Mean (mm): 0.20, Phi Sorting: 0.50 Fines (230): 8.06% (SP-SM)
-25.2	20.0		No Recovery.			
			End of Boring			

0 5 10 15 20 25

FLORIDA DEP ROSS WIGGINS PASS_2011_VCS.GPJ FL DEP ROSS.GDT 9/9/11

SAJ FORM 1836 JUN 02 **MODIFIED FOR THE FLORIDA DEP** JUN 04

Boring Designation WPVC-11-07

DRILLING LOG

DIVISION	
INSTALLATION	
SHEET 1 OF 1 SHEETS	
1. PROJECT	Wiggins Pass Inlet Management, Collier County, FL
2. BORING DESIGNATION	WPVC-11-07
LOCATION COORDINATES	X = 384,049 Y = 711,670
3. DRILLING AGENCY	Athena Technologies, Inc.
CONTRACTOR FILE NO.	
4. NAME OF DRILLER	Palmer McLellan
5. DIRECTION OF BORING	☒ VERTICAL ☐ INCLINED
DEG. FROM VERTICAL	
BEARING	
6. THICKNESS OF OVERBURDEN	0.0 Ft.
7. DEPTH DRILLED INTO ROCK	0.0 Ft.
8. TOTAL DEPTH OF BORING	12.7 Ft.
9. SIZE AND TYPE OF BIT	3.0 In.
10. COORDINATE SYSTEM/DATUM	Florida State Plane East
HORIZONTAL	NAD 1983
VERTICAL	NAVD 88
11. MANUFACTURER'S DESIGNATION OF DRILL	Electric
☐ AUTO HAMMER ☐ MANUAL HAMMER	
12. TOTAL SAMPLES	
DISTURBED	
UNDISTURBED (UD)	
13. TOTAL NUMBER CORE BOXES	
14. ELEVATION GROUND WATER	
15. DATE BORING	STARTED 08-17-11 10:50
COMPLETED	08-17-11 10:52
16. ELEVATION TOP OF BORING	-5.1 Ft.
17. TOTAL RECOVERY FOR BORING	9.6 Ft.
18. SIGNATURE AND TITLE OF INSPECTOR	BF

ELEV. (ft)	DEPTH (ft)	LEGEND	CLASSIFICATION OF MATERIALS Depths and elevations based on measured values	% REC.	BOX OR SAMPLE	REMARKS Shell Hash calculated from visual estimate of shell <4.75mm and >2.8mm.
-5.1	0.0					
-8.6	3.5		SHELL HASH, little sand, little shell fragments, trace rock fragments, trace silt, trace whole shell, rock fragments typically up to 1.0", whole shells up to 1.5", shell fragments typically up to 2.0", (2.0"x1.5") rock fragment @ 1.3, (2.5"x1.5") shell fragment @ 1.0", (3.0"x2.0") shell fragment @ 1.4', (1.75"x1.5") rock fragment @ 3.5', gray (2.5Y-6/1), (SW).		1	Sample #1, Depth = 1.8' Mean (mm): 1.56, Phi Sorting: 1.90 Fines (230): 1.20% (SW)
-10.4	5.3		SAND, little clay, little organics, trace rock fragments, trace shell hash, trace wood, clay distributed in laminae and pockets up to 0.5", wood fragments up to 1.0", rock fragments up to 0.5", black (5Y-2.5/1), (SC).		2	Sample #2, Depth = 4.6' Mean (mm): 0.23, Phi Sorting: 1.38 Fines (230): 13.78% (SC)
-13.1	8.0		SAND, fine grained, quartz, trace clay, trace shell hash, trace silt, trace wood, clay distributed in laminae and pockets up to 1.0", wood fragments up to 1.0", clay decreases with depth, olive gray (5Y-4/2), (SP-SC).		3	Sample #3, Depth = 6.2' Mean (mm): 0.19, Phi Sorting: 0.74 Fines (230): 7.34% (SP-SC)
-14.7	9.6		SAND, fine grained, quartz, trace clay, trace silt, silt distributed in pockets up to 0.5", clay distributed in laminae, grayish brown (10YR-5/2), (SP).		4	Sample #4, Depth = 8.8' Mean (mm): 0.15, Phi Sorting: 0.31 Fines (230): 3.30% (SP)
-17.8	12.7		No Recovery.			
			End of Boring			

0 5 10 15 20 25

FLORIDA DEP ROSS WIGGINS_PASS_2011_VCS.GPJ FL DEP ROSS.GDT 9/9/11

SAJ FORM 1836 **MODIFIED FOR THE FLORIDA DEP**
JUN 02 JUN 04

Boring Designation WPVC-11-08

DRILLING LOG

DIVISION	
INSTALLATION	
SHEET 1 OF 1 SHEETS	
1. PROJECT	Wiggins Pass Inlet Management, Collier County, FL
2. BORING DESIGNATION	WPVC-11-08
LOCATION COORDINATES	X = 384,332 Y = 711,891
3. DRILLING AGENCY	Athena Technologies, Inc.
CONTRACTOR FILE NO.	
4. NAME OF DRILLER	Palmer McLellan
5. DIRECTION OF BORING	☒ VERTICAL ☐ INCLINED
DEG. FROM VERTICAL	
BEARING	
6. THICKNESS OF OVERBURDEN	0.0 Ft.
7. DEPTH DRILLED INTO ROCK	0.0 Ft.
8. TOTAL DEPTH OF BORING	20.0 Ft.
9. SIZE AND TYPE OF BIT	3.0 In.
10. COORDINATE SYSTEM/DATUM	Florida State Plane East
HORIZONTAL	NAD 1983
VERTICAL	NAVD 88
11. MANUFACTURER'S DESIGNATION OF DRILL	Electric
☐ AUTO HAMMER ☐ MANUAL HAMMER	
12. TOTAL SAMPLES	
DISTURBED	
UNDISTURBED (UD)	
13. TOTAL NUMBER CORE BOXES	
14. ELEVATION GROUND WATER	
15. DATE BORING	STARTED 08-17-11 08:55
COMPLETED	08-17-11 08:57
16. ELEVATION TOP OF BORING	-4.2 Ft.
17. TOTAL RECOVERY FOR BORING	16.4 Ft.
18. SIGNATURE AND TITLE OF INSPECTOR	BF

ELEV. (ft)	DEPTH (ft)	LEGEND	CLASSIFICATION OF MATERIALS Depths and elevations based on measured values	% REC.	BOX OR SAMPLE	REMARKS Shell Hash calculated from visual estimate of shell <4.75mm and >2.8mm.
-4.2	0.0					
-5.8	1.6		SHELL HASH, some sand, some shell fragments, trace rock fragments, trace silt, trace whole shell, whole shells up to 2.0", shell fragments typically up to 1.0", rock fragments up to 0.5", (3.0"x2.0") shell fragment @ 1.4', gray (5Y-5/1), (SW).		1	Sample #1, Depth = 0.8' Mean (mm): 1.42, Phi Sorting: 2.15 Fines (230): 0.69% (SW)
-8.4	4.2		SAND, fine grained, quartz, some shell hash, trace shell fragments, trace silt, trace whole shell, whole shells up to 1.5", shell fragments up to 1.0", gray (2.5Y-6/1), (SW).		2	Sample #2, Depth = 2.9' Mean (mm): 0.59, Phi Sorting: 1.63 Fines (230): 1.00% (SW)
-13.0	8.8		Shelly SAND, trace silt, shell component is shell hash, shell fragments and whole shells up to 2.0", (1.0"x1.5") rock fragment @ 6.9', gray (2.5Y-6/1), (SW).		3	Sample #3, Depth = 6.6' Mean (mm): 0.75, Phi Sorting: 2.05 Fines (230): 1.10% (SW)
-14.8	10.6		SAND, some shell hash, trace shell fragments, trace silt, shell fragments up to 1.0", (3.0"x1.5") whole shell @ 10.2', (2.0"x2.75") whole shell @ 10.5', light gray (2.5Y-7/2), (SW-SM).		4	Sample #4, Depth = 9.7' Mean (mm): 0.84, Phi Sorting: 1.90 Fines (230): 5.88% (SW-SM)
-20.0	15.8		SAND, fine grained, quartz, trace silt, silt distributed in pockets up to 1.5" and laminae, color is mottled dark olive brown (2.5Y-3/3), brown (10YR-4/3) and, black (2.5Y-2.5/1), (SP-SM).		5	Sample #5, Depth = 13.0' Mean (mm): 0.16, Phi Sorting: 0.33 Fines (230): 6.10% (SP-SM)
-20.6	16.4		Gravely CLAY, gravel component is rock fragments up to 2.5", gray (5Y-6/1), (GW).			
-24.2	20.0		No Recovery.			
			End of Boring			

0 5 10 15 20 25

FLORIDA DEP ROSS WIGGINS PASS_2011_VCS.GPJ FL DEP ROSS.GDT 9/9/11

SAJ FORM 1836 **MODIFIED FOR THE FLORIDA DEP**
JUN 02 JUN 04

Boring Designation WPVC-11-09

DRILLING LOG	DIVISION	INSTALLATION	SHEET 1 OF 1 SHEETS

1. PROJECT Wiggins Pass Inlet Management Collier County, FL	9. SIZE AND TYPE OF BIT: 3.0 In.
	10. COORDINATE SYSTEM/DATUM: Florida State Plane East; HORIZONTAL: NAD 1983; VERTICAL: NAVD 88
2. BORING DESIGNATION: WPVC-11-09; LOCATION COORDINATES: X = 384,334 Y = 711,763	11. MANUFACTURER'S DESIGNATION OF DRILL: Electric; ☐ AUTO HAMMER ☐ MANUAL HAMMER
3. DRILLING AGENCY: Athena Technologies, Inc.; CONTRACTOR FILE NO.	12. TOTAL SAMPLES; DISTURBED; UNDISTURBED (UD)
4. NAME OF DRILLER: Palmer McLellan	13. TOTAL NUMBER CORE BOXES
5. DIRECTION OF BORING: ☒ VERTICAL ☐ INCLINED; DEG. FROM VERTICAL; BEARING	14. ELEVATION GROUND WATER
	15. DATE BORING: STARTED 08-17-11 09:23; COMPLETED 08-17-11 09:24
6. THICKNESS OF OVERBURDEN: 0.0 Ft.	16. ELEVATION TOP OF BORING: -6.6 Ft.
7. DEPTH DRILLED INTO ROCK: 0.0 Ft.	17. TOTAL RECOVERY FOR BORING: 16.8 Ft.
8. TOTAL DEPTH OF BORING: 20.0 Ft.	18. SIGNATURE AND TITLE OF INSPECTOR: KD

ELEV. (ft)	DEPTH (ft)	LEGEND	CLASSIFICATION OF MATERIALS Depths and elevations based on measured values	% REC.	BOX OR SAMPLE	REMARKS Shell Hash calculated from visual estimate of shell <4.75mm and >2.8mm.
-6.6	0.0					
-7.6	1.0		SAND, fine grained, quartz, some shell hash, trace silt, trace whole shell, whole shells up to 0.5", gray (5Y-6/1), (SW).		1	Sample #1, Depth = 0.5' Mean (mm): 0.33, Phi Sorting: 1.18 Fines (230): 1.11% (SW)
-11.6	5.0		SAND, fine grained, quartz, some shell hash, trace rock fragments, trace shell fragments, trace silt, trace whole shell, whole shells up to (1.5"x1.0"), shell fragments up to 1.5", rock fragments typically up to (1.25"x1.0"), (1.75"x1.5") rock fragment @ 2.7', 1.0" silty pocket @ 2.9', 0.5" wood fragment @ 4.0', 1.0" clayey pocket @ 5.0', 2 (4.0"x1.0") grayish brown (10YR-5/2) sandy pockets @ 4.2' and 4.8', gray (2.5Y-6/1), (SW).		2	Sample #2, Depth = 3.2' Mean (mm): 0.94, Phi Sorting: 2.54 Fines (230): 1.10% (SW)
-13.1	6.5				3	Sample #3, Depth = 5.7' Mean (mm): 0.18, Phi Sorting: 0.71 Fines (230): 3.02% (SP)
-13.9	7.3		SAND, fine grained, quartz, trace clay, trace organics, trace shell hash, trace silt, organics distributed in pockets up to 0.5", clay distributed in clayey pockets up to 0.75", grayish brown (10YR-5/2), (SP).		4	Sample #4, Depth = 6.8' Mean (mm): 0.18, Phi Sorting: 0.62 Fines (230): 7.76% (SP-SM)
-15.6	9.0		SAND, fine grained, quartz, trace clay, trace silt, trace wood, clay distributed in clayey pockets up to 0.75", wood fragments up to 0.5", dark grayish brown (10YR-4/2), (SP-SM).		5	Sample #5, Depth = 8.1' Mean (mm): 0.21, Phi Sorting: 0.61 Fines (230): 5.38% (SP-SM)
-18.5	11.9		SAND, fine grained, quartz, trace silt, (1.0"x0.25") wood fragment @ 7.9', light brownish gray (2.5Y-6/2), (SP-SM).		6	Sample #6, Depth = 10.5' Mean (mm): 0.21, Phi Sorting: 0.38 Fines (230): 2.70% (SP)
-21.1	14.5		SAND, fine grained, quartz, trace silt, dark grayish brown (10YR-4/2), (SP).		7	Sample #7, Depth = 13.1' Mean (mm): 0.25, Phi Sorting: 0.66 Fines (230): 5.81% (SP-SM)
-21.6	15.0		SAND, fine grained, quartz, trace clay, trace silt, clay distributed in clayey pockets up to 1.0", (3.0"x1.0") gray (2.5Y-6/1) clayey pocket @ 13.7', very dark grayish brown (10YR-3/2), (SP-SM).			
-23.4	16.8		CLAY, clay is partially lithified, 2 (2.5") rock fragments @ 14.9', 1.0" rock fragment @ 14.8', gray (2.5Y-5/1), (CL).			
-26.6	20.0		CLAY, carbonate, trace rock fragments, trace shell fragments, clay is partially lithified, shell fragments up to 1.0", rock fragments up to 1.5", very pale brown (10YR-8/2), (CL). No Recovery.			
			End of Boring			

0 5 10 15 20 25

FLORIDA DEP ROSS_WIGGINS_PASS_2011_VCS.GPJ FL DEP ROSS.GDT 9/9/11

SAJ FORM 1836 **MODIFIED FOR THE FLORIDA DEP**
JUN 02 JUN 04

Boring Designation WPVC-11-10

DRILLING LOG

DIVISION	
INSTALLATION	
SHEET 1 OF 1 SHEETS	
1. PROJECT	Wiggins Pass Inlet Management, Collier County, FL
2. BORING DESIGNATION	WPVC-11-10
LOCATION COORDINATES	X = 384,526 Y = 711,946
3. DRILLING AGENCY	Athena Technologies, Inc.
CONTRACTOR FILE NO.	
4. NAME OF DRILLER	Palmer McLellan
5. DIRECTION OF BORING	☒ VERTICAL ☐ INCLINED
DEG. FROM VERTICAL	
BEARING	
6. THICKNESS OF OVERBURDEN	0.0 Ft.
7. DEPTH DRILLED INTO ROCK	0.0 Ft.
8. TOTAL DEPTH OF BORING	11.5 Ft.
9. SIZE AND TYPE OF BIT	3.0 In.
10. COORDINATE SYSTEM/DATUM	Florida State Plane East
HORIZONTAL	NAD 1983
VERTICAL	NAVD 88
11. MANUFACTURER'S DESIGNATION OF DRILL	Electric
☐ AUTO HAMMER ☐ MANUAL HAMMER	
12. TOTAL SAMPLES	
DISTURBED	
UNDISTURBED (UD)	
13. TOTAL NUMBER CORE BOXES	
14. ELEVATION GROUND WATER	
15. DATE BORING	STARTED 08-16-11 16:31
COMPLETED	08-16-11 16:33
16. ELEVATION TOP OF BORING	-4.5 Ft.
17. TOTAL RECOVERY FOR BORING	9.4 Ft.
18. SIGNATURE AND TITLE OF INSPECTOR	KD

ELEV. (ft)	DEPTH (ft)	LEGEND	CLASSIFICATION OF MATERIALS Depths and elevations based on measured values	% REC.	BOX OR SAMPLE	REMARKS Shell Hash calculated from visual estimate of shell <4.75mm and >2.8mm.
-4.5	0.0					
-7.2	2.7		SAND, fine grained, quartz, little shell hash, trace shell fragments, trace silt, trace whole shell, whole shells up to (1.0"x0.75"), shell fragments up to 1.0", 0.5" silty pocket @ 2.1', gray (2.5Y-6/1), (SW).		1	Sample #1, Depth = 1.3' Mean (mm): 0.34, Phi Sorting: 1.59 Fines (230): 1.12% (SW)
-9.6	5.1		SAND, fine grained, quartz, little shell fragments, little shell hash, trace silt, trace whole shell, whole shells and shell fragments typically up to 1.5", (2.25"x1.25") shell fragment @ 3.6', gray (2.5Y-6/1), (SW).		2	Sample #2, Depth = 4.0' Mean (mm): 0.63, Phi Sorting: 2.27 Fines (230): 1.04% (SW)
-10.1	5.6		SAND, fine grained, quartz, some shell hash, trace shell fragments, trace silt, trace whole shell, shell fragments typically up to 1.0", whole shells up to 1.25", (2.0"x0.75") shell fragment @ 5.2', gray (2.5Y-6/1), (SW).		3	Sample #3, Depth = 5.3' Mean (mm): 0.97, Phi Sorting: 2.40 Fines (230): 1.11% (SW)
-12.2	7.7		SAND, fine grained, quartz, trace clay, trace organics, trace silt, clay distributed in pockets up to 1.0", grayish brown (10YR-5/2), (SP-SM).		4	Sample #4, Depth = 6.6' Mean (mm): 0.18, Phi Sorting: 0.56 Fines (230): 6.57% (SP-SM)
-13.9	9.4		SAND, fine grained, quartz, some rock fragments, little clay, trace organics, rock fragments up to 3.0" and distributed between 9.1' and 9.4', dark gray (2.5Y-4/1), (SC).		5	Sample #5, Depth = 8.5' Mean (mm): 0.24, Phi Sorting: 0.66 Fines (230): 11.95% (SC)
-16.0	11.5		No Recovery.			
			End of Boring			

0 5 10 15 20 25

FLORIDA DEP ROSS_WIGGINS_PASS_2011_VCS.GPJ FL DEP ROSS.GDT 9/9/11

SAJ FORM 1836 JUN 02 **MODIFIED FOR THE FLORIDA DEP** JUN 04

Boring Designation WPVC-11-11

DRILLING LOG

DIVISION	
INSTALLATION	
SHEET 1 OF 1 SHEETS	
1. PROJECT	Wiggins Pass Inlet Management, Collier County, FL
2. BORING DESIGNATION	WPVC-11-11
LOCATION COORDINATES	X = 384,490 Y = 711,731
3. DRILLING AGENCY	Athena Technologies, Inc.
CONTRACTOR FILE NO.	
4. NAME OF DRILLER	Palmer McLellan
5. DIRECTION OF BORING	☒ VERTICAL ☐ INCLINED
DEG. FROM VERTICAL	
BEARING	
6. THICKNESS OF OVERBURDEN	0.0 Ft.
7. DEPTH DRILLED INTO ROCK	0.0 Ft.
8. TOTAL DEPTH OF BORING	20.0 Ft.
9. SIZE AND TYPE OF BIT	3.0 In.
10. COORDINATE SYSTEM/DATUM	Florida State Plane East
HORIZONTAL	NAD 1983
VERTICAL	NAVD 88
11. MANUFACTURER'S DESIGNATION OF DRILL	Electric
☐ AUTO HAMMER ☐ MANUAL HAMMER	
12. TOTAL SAMPLES	
DISTURBED	
UNDISTURBED (UD)	
13. TOTAL NUMBER CORE BOXES	
14. ELEVATION GROUND WATER	
15. DATE BORING	STARTED 08-16-11 13:56
COMPLETED	08-16-11 13:58
16. ELEVATION TOP OF BORING	-1.1 Ft.
17. TOTAL RECOVERY FOR BORING	16.2 Ft.
18. SIGNATURE AND TITLE OF INSPECTOR	TD

ELEV. (ft)	DEPTH (ft)	LEGEND	CLASSIFICATION OF MATERIALS Depths and elevations based on measured values	% REC.	BOX OR SAMPLE	REMARKS Shell Hash calculated from visual estimate of shell <4.75mm and >2.8mm.
-1.1	0.0					
-4.6	3.5		SAND, fine grained, quartz, little shell fragments, little shell hash, trace silt, trace whole shell, shell fragments and whole shells up to 1.0", light gray (5Y-7/1), (SW).		1	Sample #1, Depth = 2.0' Mean (mm): 0.39, Phi Sorting: 1.23 Fines (230): 0.76% (SW)
-5.5	4.4		SHELL HASH, some sand, trace shell fragments, trace silt, trace whole shell, shell fragments up to (1.5"x1.0"), whole shells up to 1.5", gray (2.5Y-6/1), (SW).		2	Sample #2, Depth = 4.0' Mean (mm): 0.77, Phi Sorting: 1.57 Fines (230): 1.05% (SW)
-6.4	5.3				3	Sample #3, Depth = 4.7' Mean (mm): 0.17, Phi Sorting: 0.52 Fines (230): 1.70% (SP)
-6.9	5.8		SAND, fine grained, quartz, trace shell fragments, trace shell hash, trace silt, shell fragments up to 0.5", organic lamina @ 4.9', clayey lamina @ 5.0', light gray (2.5Y-7/1), (SP).		4	Sample #4, Depth = 5.6' Mean (mm): 1.55, Phi Sorting: 2.42 Fines (230): 0.61% (SW)
-7.5	6.4				5	Sample #5, Depth = 6.0' Mean (mm): 0.30, Phi Sorting: 1.33 Fines (230): 1.16% (SW)
-9.3	8.2		SHELL, little sand, trace silt, shell component is shell hash, shell fragments up to (2.0"x1.0") and whole shells up to 1.5", gray (5Y-6/1), (SW).		6	Sample #6, Depth = 7.1' Mean (mm): 0.32, Phi Sorting: 1.80 Fines (230): 1.16% (SW)
-10.0	8.9		SAND, fine grained, quartz, little shell hash, trace shell fragments, trace silt, trace whole shell, whole shells up to 1.0", shell fragments up to 0.5", light gray (2.5Y-7/1), (SW).		4	Sample #7, Depth = 9.9' Mean (mm): 0.24, Phi Sorting: 0.61 Fines (230): 11.19% (SP-SM)
-10.8	9.7				6	Sample #8, Depth = 11.0' Mean (mm): 0.49, Phi Sorting: 2.06 Fines (230): 2.96% (SW)
-11.3	10.2		SAND, fine grained, quartz, trace shell fragments, trace shell hash, trace silt, trace whole shell, shell fragments up to 1.0", whole shells up to (1.5"x1.0"), organic lamina @ 7.9', light gray (2.5Y-7/1), (SW).		7	Sample #9, Depth = 13.6' Mean (mm): 0.15, Phi Sorting: 0.23 Fines (230): 2.47% (SP)
-12.9	11.8		SHELL, little sand, trace silt, shell component is shell hash, shell fragments up to (2.0"x1.0") and whole shells up to 1.5", gray (5Y-6/1), (SW).		8	
-17.3	16.2		SAND, fine grained, quartz, trace shell fragments, trace shell hash, trace silt, shell fragments up to 1.0", 1.0" organic pocket @ 9.4', 3.0" whole shell @ 9.5', light gray (2.5Y-7/1), (SW).		9	
-21.1	20.0		SAND, fine grained, quartz, little silt, trace clay, very dark gray (2.5Y-3/1), (SP-SM).			
			SAND, fine grained, quartz, trace clay, trace shell fragments, trace shell hash, trace silt, trace whole shell, whole shells up to 1.0", shell fragments up to 1.5", clay, shell fragments and whole shells decrease with depth, light brownish gray (2.5Y-6/2), (SW).			
			SAND, fine grained, quartz, trace silt, silt distributed in laminae and pockets up to 0.25", color is mottled light brownish gray (10YR-6/2) and, grayish brown (10YR-5/2), (SP).			
			No Recovery.			
			End of Boring			

0 5 10 15 20 25

FLORIDA DEP ROSS WIGGINS PASS_2011_VCS.GPJ FL DEP ROSS.GDT 9/9/11

SAJ FORM 1836 **MODIFIED FOR THE FLORIDA DEP**
JUN 02 JUN 04

Boring Designation WPVC-11-12

DRILLING LOG

DIVISION	
INSTALLATION	
SHEET 1 OF 1 SHEETS	
1. PROJECT	Wiggins Pass Inlet Management Collier County, FL
2. BORING DESIGNATION	WPVC-11-12
LOCATION COORDINATES	X = 384,677 Y = 711,723
3. DRILLING AGENCY	Athena Technologies, Inc.
CONTRACTOR FILE NO.	
4. NAME OF DRILLER	Palmer McLellan
5. DIRECTION OF BORING	☒ VERTICAL ☐ INCLINED
DEG. FROM VERTICAL	
BEARING	
6. THICKNESS OF OVERBURDEN	0.0 Ft.
7. DEPTH DRILLED INTO ROCK	0.0 Ft.
8. TOTAL DEPTH OF BORING	20.0 Ft.
9. SIZE AND TYPE OF BIT	3.0 In.
10. COORDINATE SYSTEM/DATUM	Florida State Plane East
HORIZONTAL	NAD 1983
VERTICAL	NAVD 88
11. MANUFACTURER'S DESIGNATION OF DRILL	Electric
☐ AUTO HAMMER ☐ MANUAL HAMMER	
12. TOTAL SAMPLES	
DISTURBED	
UNDISTURBED (UD)	
13. TOTAL NUMBER CORE BOXES	
14. ELEVATION GROUND WATER	
15. DATE BORING	STARTED 08-16-11 13:26
COMPLETED	08-16-11 13:27
16. ELEVATION TOP OF BORING	-3.5 Ft.
17. TOTAL RECOVERY FOR BORING	16.6 Ft.
18. SIGNATURE AND TITLE OF INSPECTOR	BF

ELEV. (ft)	DEPTH (ft)	LEGEND	CLASSIFICATION OF MATERIALS Depths and elevations based on measured values	% REC.	BOX OR SAMPLE	REMARKS Shell Hash calculated from visual estimate of shell <4.75mm and >2.8mm.
-3.5	0.0					
-4.6	1.1		Shelly SAND, trace silt, shell component is shell hash, whole shells up to 1.5" and shell fragments up to 1.0", gray (5Y-6/1), (SW).		1	Sample #1, Depth = 0.5' Mean (mm): 1.17, Phi Sorting: 2.11 Fines (230): 0.84% (SW)
-6.3	2.8		SAND, fine grained, quartz, trace shell hash, trace silt, shell hash decreases with depth, 0.5" wood fragment @ 2.5', light gray (2.5Y-7/1), (SW).		2	Sample #2, Depth = 2.0' Mean (mm): 0.26, Phi Sorting: 1.20 Fines (230): 1.13% (SW)
-7.5	4.0		SAND, fine grained, quartz, trace shell fragments, trace shell hash, trace silt, trace whole shell, shell fragments typically up to 1.0", whole shells typically up to 1.5", (3.0"x 2.75") whole shell @ 3.0', (2.5"x2.0") rock fragment @ 3.6', light brownish gray (2.5Y-6/2), (SW).		3	Sample #3, Depth = 3.5' Mean (mm): 0.32, Phi Sorting: 1.53 Fines (230): 0.95% (SW)
-8.0	4.5				1	
-10.6	7.1		Shelly SAND, trace silt, shell component is shell hash, whole shells and shell fragments up to 1.0", (3.0"x2.5") shell fragment @ 4.3', gray (5Y-6/1), (SW).		4	Sample #4, Depth = 5.5' Mean (mm): 0.19, Phi Sorting: 0.69 Fines (230): 4.34% (SP-SM)
-13.7	10.2		SAND, fine grained, quartz, trace clay, trace silt, trace wood, clay distributed in pockets up to 0.5", wood fragments up to 1.0", dark olive brown (2.5Y-3/3), (SP-SM).		5	Sample #5, Depth = 8.5' Mean (mm): 0.19, Phi Sorting: 0.50 Fines (230): 2.57% (SP)
-15.6	12.1		SAND, fine grained, quartz, trace clay, trace silt, trace wood, wood fragments up to 1.0", clay distributed in laminae, light olive brown (2.5Y-5/3), (SP).		6	Sample #6, Depth = 11.2' Mean (mm): 0.24, Phi Sorting: 0.44 Fines (230): 1.11% (SP)
-16.0	12.5		SAND, fine grained, quartz, trace silt, trace wood, wood fragments up to 0.5", light brownish gray (2.5Y-6/2), (SP).		7	Sample #7, Depth = 12.3' Mean (mm): 0.22, Phi Sorting: 0.55 Fines (230): 6.23% (SP-SM)
-17.9	14.4		SAND, fine grained, quartz, trace silt, light olive brown (2.5Y-5/3), (SP-SM).		8	Sample #8, Depth = 13.4' Mean (mm): 0.15, Phi Sorting: 0.30 Fines (230): 1.59% (SP)
-20.1	16.6		SAND, fine grained, quartz, trace silt, white (5Y-8/1), (SP). SAND, fine grained, quartz, trace clay, trace silt, clay distributed in laminae, silt increases with depth, light olive brown (2.5Y-5/3), (SP).		5	
-23.5	20.0		No Recovery.			
			End of Boring			

0 5 10 15 20 25

FLORIDA DEP ROSS WIGGINS_PASS_2011_VCS.GPJ FL DEP ROSS.GDT 9/9/11

SAJ FORM 1836 **MODIFIED FOR THE FLORIDA DEP**
JUN 02 JUN 04

Boring Designation WPVC-11-13

DRILLING LOG

DIVISION	
INSTALLATION	
SHEET 1 OF 1 SHEETS	
1. PROJECT	Wiggins Pass Inlet Management, Collier County, FL
2. BORING DESIGNATION	WPVC-11-13
LOCATION COORDINATES	X = 384,749 Y = 711,975
3. DRILLING AGENCY	Athena Technologies, Inc.
CONTRACTOR FILE NO.	
4. NAME OF DRILLER	Palmer McLellan
5. DIRECTION OF BORING	☒ VERTICAL ☐ INCLINED
DEG. FROM VERTICAL	
BEARING	
6. THICKNESS OF OVERBURDEN	0.0 Ft.
7. DEPTH DRILLED INTO ROCK	0.0 Ft.
8. TOTAL DEPTH OF BORING	20.0 Ft.
9. SIZE AND TYPE OF BIT	3.0 In.
10. COORDINATE SYSTEM/DATUM	Florida State Plane East
HORIZONTAL	NAD 1983
VERTICAL	NAVD 88
11. MANUFACTURER'S DESIGNATION OF DRILL	Electric
☐ AUTO HAMMER ☐ MANUAL HAMMER	
12. TOTAL SAMPLES	
DISTURBED	
UNDISTURBED (UD)	
13. TOTAL NUMBER CORE BOXES	
14. ELEVATION GROUND WATER	
15. DATE BORING	STARTED 08-16-11 13:00
COMPLETED	08-16-11 13:02
16. ELEVATION TOP OF BORING	-3.8 Ft.
17. TOTAL RECOVERY FOR BORING	16 Ft.
18. SIGNATURE AND TITLE OF INSPECTOR	KD

ELEV. (ft)	DEPTH (ft)	LEGEND	CLASSIFICATION OF MATERIALS Depths and elevations based on measured values	% REC.	BOX OR SAMPLE	REMARKS Shell Hash calculated from visual estimate of shell <4.75mm and >2.8mm.
-3.8	0.0					
-4.8	1.0		SAND, fine grained, quartz, some shell hash, trace shell fragments, trace silt, trace whole shell, shell fragments up to 0.75", whole shells up to 1.25", 1.5" rock fragment @ 0.1', (2.25"x1.25") rock fragment @ 0.1', (3.0"x2.0") rock fragment @ 0.3', gray (2.5Y-5/1), (SW).		1	Sample #1, Depth = 0.5' Mean (mm): 0.37, Phi Sorting: 0.97 Fines (230): 1.04% (SW)
-5.7	1.9		SHELL, some sand, trace rock fragments, shell component is shell hash, shell fragments and whole shells up to 1.5", rock fragments up to 0.75", gray (2.5Y-6/1), (SW).		2	Sample #2, Depth = 1.4' Mean (mm): 1.58, Phi Sorting: 2.32 Fines (230): 0.63% (SW)
-7.0	3.2		SAND, fine grained, quartz, trace organics, trace shell fragments, trace shell hash, trace silt, trace whole shell, shell fragments and whole shells up to 1.25", gray (2.5Y-6/1), (SW).		3	Sample #3, Depth = 2.6' Mean (mm): 0.25, Phi Sorting: 1.10 Fines (230): 1.46% (SW)
-7.9	4.1		SHELL, some sand, trace rock fragments, trace silt, shell component is shell hash, shell fragments up to 1.5" and whole shells up to 1.25", rock fragments up to 1.5", gray (2.5Y-6/1), (SW).		2	
-12.3	8.5		SAND, fine grained, quartz, trace shell fragments, trace shell hash, trace whole shell, whole shells typically up to 1.5", shell fragments up to 1.0", (2.0"x1.5") rock fragment @ 4.7', (1.5"x1.0") rock fragment @ 4.7', (3.0"X1.5") whole shell @ 7.0', gray (2.5Y-6/1), (SW).		4	Sample #4, Depth = 6.3' Mean (mm): 0.27, Phi Sorting: 1.16 Fines (230): 1.28% (SW)
-13.3	9.5		SAND, fine grained, quartz, trace shell fragments, trace shell hash, trace whole shell, whole shells typically up to 1.5", shell fragments up to 1.0", (2.0"x1.5") rock fragment @ 4.7', (1.5"x1.0") rock fragment @ 4.7', (3.0"X1.5") whole shell @ 7.0', gray (2.5Y-6/1), (SW).		5	Sample #5, Depth = 9.0' Mean (mm): 0.18, Phi Sorting: 0.67 Fines (230): 7.02% (SP-SM)
-14.5	10.7		SAND, fine grained, quartz, trace shell fragments, trace shell hash, trace whole shell, whole shells typically up to 1.5", shell fragments up to 1.0", (2.0"x1.5") rock fragment @ 4.7', (1.5"x1.0") rock fragment @ 4.7', (3.0"X1.5") whole shell @ 7.0', gray (2.5Y-6/1), (SW).		6	Sample #6, Depth = 10.1' Mean (mm): 0.22, Phi Sorting: 0.53 Fines (230): 3.45% (SP)
-15.2	11.4		SAND, fine grained, quartz, trace silt, 0.5" wood fragment @ 9.1', very dark grayish brown (10YR-3/2), (SP-SM).		7	Sample #7, Depth = 11.2' Mean (mm): 0.84, Phi Sorting: 1.86 Fines (230): 4.88% (SW-SM)
-16.4	12.6		SAND, fine grained, quartz, trace silt, 0.5" wood fragment @ 9.1', very dark grayish brown (10YR-3/2), (SP-SM).		8	Sample #8, Depth = 12.0' Mean (mm): 0.24, Phi Sorting: 0.40 Fines (230): 6.40% (SP-SM)
-17.0	13.2		SAND, fine grained, quartz, trace silt, 0.5" wood fragment @ 9.1', very dark grayish brown (10YR-3/2), (SP-SM).		9	Sample #9, Depth = 12.8' Mean (mm): 0.19, Phi Sorting: 0.59 Fines (230): 9.37% (SP-SM)
-17.5	13.7		SAND, fine grained, quartz, trace silt, 0.5" wood fragment @ 9.1', very dark grayish brown (10YR-3/2), (SP-SM).		10	Sample #10, Depth = 13.4' Mean (mm): 0.14, Phi Sorting: 0.41 Fines (230): 3.17% (SP)
-18.7	14.9		SAND, fine grained, quartz, trace clay, trace silt, clay distributed in clayey pockets up to 0.5", (3.0"x0.75") silty pocket @ 10.6', grayish brown (10YR-5/2), (SP).		11	Sample #11, Depth = 14.4' Mean (mm): 0.15, Phi Sorting: 0.48 Fines (230): 13.35% (SC)
-19.8	16.0		SHELL HASH, little sand, trace whole shell, whole shells up to 1.0", 0.5" wood fragments @ 10.8' and 11.0', 3.0" sand pocket @ 10.9', light gray (2.5Y-7/2), (SW-SM).			
			SAND, fine grained, quartz, trace organics, trace silt, (2.0"x1.0") clayey pocket @ 12.5', very dark brown (10YR-2/2), (SP-SM).			
			SAND, fine grained, quartz, trace clay, trace silt, grayish brown (10YR-5/2), (SP-SM).			
-23.8	20.0		SAND, fine grained, quartz, trace silt, silt distributed in laminae, light gray (2.5Y-7/1), (SP).			
			SAND, fine grained, quartz, little clay, grayish brown (2.5Y-5/2), (SC).			
			Sandy CLAY, some rock fragments, trace shell fragments, clay is partially lithified, rock fragments up to 3.0", shell fragments up to 1.0", gray (2.5Y-6/1), (CL).			
			No Recovery.			

End of Boring

FLORIDA DEP ROSS WIGGINS_PASS_2011_VCS.GPJ FL DEP ROSS.GDT 9/9/11

SAJ FORM 1836 JUN 02 **MODIFIED FOR THE FLORIDA DEP** JUN 04

Boring Designation WPVC-11-14

DRILLING LOG

DIVISION	
INSTALLATION	
SHEET 1 OF 1 SHEETS	
1. PROJECT	Wiggins Pass Inlet Management, Collier County, FL
2. BORING DESIGNATION	WPVC-11-14
LOCATION COORDINATES	X = 384,775 Y = 711,866
3. DRILLING AGENCY	Athena Technologies, Inc.
CONTRACTOR FILE NO.	
4. NAME OF DRILLER	Palmer McLellan
5. DIRECTION OF BORING	☒ VERTICAL ☐ INCLINED
DEG. FROM VERTICAL	
BEARING	
6. THICKNESS OF OVERBURDEN	0.0 Ft.
7. DEPTH DRILLED INTO ROCK	0.0 Ft.
8. TOTAL DEPTH OF BORING	20.0 Ft.
9. SIZE AND TYPE OF BIT	3.0 In.
10. COORDINATE SYSTEM/DATUM	Florida State Plane East
HORIZONTAL	NAD 1983
VERTICAL	NAVD 88
11. MANUFACTURER'S DESIGNATION OF DRILL	Electric
☐ AUTO HAMMER ☐ MANUAL HAMMER	
12. TOTAL SAMPLES	
DISTURBED	
UNDISTURBED (UD)	
13. TOTAL NUMBER CORE BOXES	
14. ELEVATION GROUND WATER	
15. DATE BORING	STARTED 08-16-11 14:26
COMPLETED	08-16-11 14:28
16. ELEVATION TOP OF BORING	-1.1 Ft.
17. TOTAL RECOVERY FOR BORING	16.9 Ft.
18. SIGNATURE AND TITLE OF INSPECTOR	KD

ELEV. (ft)	DEPTH (ft)	CLASSIFICATION OF MATERIALS (Depths and elevations based on measured values)	% REC.	BOX OR SAMPLE
-1.1	0.0			
-3.7	2.6	Shelly SAND, fine grained, quartz, trace rock fragments, trace shell fragments, trace silt, trace whole shell, shell component is shell hash, rock frags. up to 1", whole shells up to 1.75", shell frags. typically up to 1.5", (2"x1.5") shell frag. @ 0.2', gray (2.5Y-6/1), (SW).		1
-4.4	3.3	SAND, fine grained, quartz, little shell hash, trace organics, trace shell fragments, trace silt, shell frags. typically up to 0.75", (3"x2") shelly pocket @ 3', shell component is shell hash, shell frags. up to 2" and whole shells up to 1", gray (2.5Y-6/1), (SW).		2
-6.0	4.9			3
-7.2	6.1			4
-8.7	7.6	SAND, fine grained, quartz, trace organics, trace shell fragments, trace shell hash, trace silt, shell frags. up to 0.75", (3"x2") organicy pocket @ 3.5', (1.25"x0.5") whole shell @ 4.8', light gray (2.5Y-7/1), (SP).		5
-9.6	8.5			6
-11.2	10.1	SAND, fine grained, quartz, little shell fragments, little silt, trace organics, trace shell hash, trace whole shell, shell frags. up to 1.5", whole shells up to 1", grayish brown (2.5Y-5/2), (SW-SM).		7
-12.0	10.9	SAND, fine grained, quartz, trace shell hash, trace silt, light gray (2.5Y-7/1), (SP).		8
-13.1	12.0	SAND, fine grained, quartz, trace shell fragments, trace shell hash, trace silt, trace whole shell, shell frags. up to 1.25", whole shells up to 1.5", silty pockets up to 0.5", light brownish gray (2.5Y-6/2), (SW).		9
-14.3	13.2			10
-15.3	14.2	SAND, fine grained, quartz, little organics, trace clay, trace silt, clay distrib. in clayey pockets up to 1", dark grayish brown (10YR-4/2), (SP-SM).		11
-18.0	16.9	SAND, fine grained, quartz, trace clay, trace organics, trace silt, clay distrib. in clayey pockets up to 0.5", very dark brown (10YR-2/2), (SP-SM).		12
-21.1	20.0	SAND, fine grained, quartz, trace clay, trace organics, trace silt, clay distrib. in clayey pockets up to 1", very dark grayish brown (10YR-3/2), (SP).		
		SAND, fine grained, quartz, trace organics, trace silt, (3"x1") silty pocket @ 13', grayish brown (10YR-5/2), (SP).		
		SHELL, some sand, trace silt, shell component is shell hash, shell frags. and whole shells up to 1", light brownish gray (2.5Y-6/2), (SW).		
		SAND, fine grained, quartz, little organics, trace silt, color is mottled dark grayish brown (10YR-4/2) and, very dark brown (10YR-2/2), (SP).		
		No Recovery.		

REMARKS

Shell Hash calculated from visual estimate of shell <4.75mm and >2.8mm.

Sample #1, Depth = 1.3'
Mean (mm): 0.77, Phi Sorting: 2.02
Fines (230): 0.91% (SW)
Sample #2, Depth = 3.2'
Mean (mm): 0.52, Phi Sorting: 1.70
Fines (230): 1.16% (SW)
Sample #3, Depth = 4.0'
Mean (mm): 0.23, Phi Sorting: 0.66
Fines (230): 1.32% (SP)
Sample #4, Depth = 5.5'
Mean (mm): 0.25, Phi Sorting: 1.64
Fines (230): 9.99% (SW-SM)
Sample #5, Depth = 6.8'
Mean (mm): 0.22, Phi Sorting: 0.58
Fines (230): 1.86% (SP)
Sample #6, Depth = 8.1'
Mean (mm): 0.38, Phi Sorting: 1.71
Fines (230): 1.54% (SW)
Sample #7, Depth = 9.2'
Mean (mm): 0.18, Phi Sorting: 0.56
Fines (230): 4.17% (SP-SM)
Sample #8, Depth = 10.5'
Mean (mm): 0.18, Phi Sorting: 0.63
Fines (230): 7.86% (SP-SM)
Sample #9, Depth = 11.5'
Mean (mm): 0.21, Phi Sorting: 0.51
Fines (230): 3.61% (SP)
Sample #10, Depth = 12.6'
Mean (mm): 0.17, Phi Sorting: 0.45
Fines (230): 2.21% (SP)
Sample #11, Depth = 13.7'
Mean (mm): 0.69, Phi Sorting: 2.18
Fines (230): 3.87% (SW)
Sample #12, Depth = 15.0'
Mean (mm): 0.18, Phi Sorting: 0.40
Fines (230): 3.76% (SP)

0 5 10 15 20 25

FLORIDA DEP ROSS WIGGINS PASS_2011_VCS.GPJ FL DEP ROSS.GDT 9/9/11

SAJ FORM 1836 JUN 02 **MODIFIED FOR THE FLORIDA DEP** JUN 04

End of Boring

Boring Designation WPVC-11-15

DRILLING LOG

DIVISION	
INSTALLATION	
SHEET 1 OF 1 SHEETS	
1. PROJECT	Wiggins Pass Inlet Management, Collier County, FL
2. BORING DESIGNATION	WPVC-11-15
LOCATION COORDINATES	X = 384,937 Y = 711,907
3. DRILLING AGENCY	Athena Technologies, Inc.
CONTRACTOR FILE NO.	
4. NAME OF DRILLER	Palmer McLellan
5. DIRECTION OF BORING	☒ VERTICAL ☐ INCLINED
DEG. FROM VERTICAL	
BEARING	
6. THICKNESS OF OVERBURDEN	0.0 Ft.
7. DEPTH DRILLED INTO ROCK	0.0 Ft.
8. TOTAL DEPTH OF BORING	20.0 Ft.
9. SIZE AND TYPE OF BIT	3.0 In.
10. COORDINATE SYSTEM/DATUM	Florida State Plane East
HORIZONTAL	NAD 1983
VERTICAL	NAVD 88
11. MANUFACTURER'S DESIGNATION OF DRILL	Electric
☐ AUTO HAMMER ☐ MANUAL HAMMER	
12. TOTAL SAMPLES	
DISTURBED	
UNDISTURBED (UD)	
13. TOTAL NUMBER CORE BOXES	
14. ELEVATION GROUND WATER	
15. DATE BORING	STARTED 08-16-11 12:28
COMPLETED	08-16-11 12:30
16. ELEVATION TOP OF BORING	-1.9 Ft.
17. TOTAL RECOVERY FOR BORING	16.2 Ft.
18. SIGNATURE AND TITLE OF INSPECTOR	BF

ELEV. (ft)	DEPTH (ft)	LEGEND	CLASSIFICATION OF MATERIALS (Depths and elevations based on measured values)	% REC.	BOX OR SAMPLE	REMARKS (Shell Hash calculated from visual estimate of shell <4.75mm and >2.8mm.)
-1.9	0.0					
-3.8	1.9		SAND, fine grained, trace shell fragments, trace shell hash, trace silt, trace whole shell, whole shells up to 1.0", shell fragments up to (1.75"x0.75"), gray (2.5Y-5/1), (SW).		1	Sample #1, Depth = 1.0' Mean (mm): 0.33, Phi Sorting: 1.69 Fines (230): 1.26% (SW)
-5.8	3.9		SAND, fine grained, quartz, trace clay, trace shell fragments, trace shell hash, trace whole shell, whole shells up to 1.5", shell fragments up to 1.0", clay distributed in pockets up to 1.0", gray (2.5Y-5/1), (SW).		2	Sample #2, Depth = 2.8' Mean (mm): 0.19, Phi Sorting: 1.22 Fines (230): 2.43% (SW)
-8.3	6.4		SAND, fine grained, quartz, some shell hash, little shell fragments, trace silt, trace whole shell, whole shells up to 2.25", shell fragments up to 2.0", (1.0"x2.0") rock fragment @ 5.6', (3.0"x1.5") rock fragment @ 4.2', gray (5Y-6/1), (SW).		3	Sample #3, Depth = 4.7' Mean (mm): 0.65, Phi Sorting: 2.13 Fines (230): 0.90% (SW)
-8.9	7.0				4	Sample #4, Depth = 6.7' Mean (mm): 0.23, Phi Sorting: 0.81 Fines (230): 1.13% (SP)
-9.4	7.5		SAND, fine grained, trace shell hash, trace silt, gray (5Y-6/1), (SP).		5	Sample #5, Depth = 7.3' Mean (mm): 0.59, Phi Sorting: 2.54 Fines (230): 8.42% (SW-SM)
-11.1	9.2		Shelly SAND, fine grained, trace silt, shell component is shell hash, shell fragments up to 2.0" and whole shells up to 1.0", gray (2.5Y-6/1), (SW-SM).		6	Sample #6, Depth = 8.5' Mean (mm): 0.18, Phi Sorting: 0.57 Fines (230): 3.34% (SP)
-13.4	11.5		SAND, fine grained, trace clay, trace shell hash, trace silt, trace wood, clay distributed in pockets up to 1.0" and laminae, wood fragments up to (3.0"x0.5"), dark grayish brown (10YR-4/2), (SP).		7	Sample #7, Depth = 10.4' Mean (mm): 0.24, Phi Sorting: 0.51 Fines (230): 2.62% (SP)
-15.7	13.8		SAND, fine grained, trace clay, trace silt, trace wood, silt distributed in pockets up to 2.0", wood fragments up to 1.0", clay distributed in pockets up to 0.5", light olive brown (2.5Y-5/3), (SP).		8	Sample #8, Depth = 12.6' Mean (mm): 0.72, Phi Sorting: 2.05 Fines (230): 1.95% (SW)
-17.8	15.9		Shelly SAND, fine grained, trace silt, shell component is shell hash, whole shells up to 1.5" and shell fragments up to 1.0", light gray (2.5Y-7/2), (SW).		9	Sample #9, Depth = 14.7' Mean (mm): 0.16, Phi Sorting: 0.53 Fines (230): 13.22% (SM)
-18.1	16.2		SAND, fine grained, little silt, trace clay, clay distributed in laminae, gray (5Y-5/1), (SM).		10	Sample #10, Depth = 16.1' Mean (mm): 0.15, Phi Sorting: 0.46 Fines (230): 5.10% (SP-SM)
			SAND, fine grained, trace silt, light gray (5Y-7/1), (SP-SM).			
			No Recovery.			
-21.9	20.0					
			End of Boring			

0 5 10 15 20 25

FLORIDA DEP ROSS WIGGINS PASS_2011_VCS.GPJ FL DEP ROSS.GDT 9/9/11

SAJ FORM 1836 **MODIFIED FOR THE FLORIDA DEP**
JUN 02 JUN 04

Boring Designation WPVC-11-16

DRILLING LOG

DIVISION	
INSTALLATION	
SHEET 1 OF 1 SHEETS	
1. PROJECT	Wiggins Pass Inlet Management, Collier County, FL
2. BORING DESIGNATION	WPVC-11-16
LOCATION COORDINATES	X = 384,973 Y = 711,790
3. DRILLING AGENCY	Athena Technologies, Inc.
CONTRACTOR FILE NO.	
4. NAME OF DRILLER	Palmer McLellan
5. DIRECTION OF BORING	☒ VERTICAL ☐ INCLINED
DEG. FROM VERTICAL	
BEARING	
6. THICKNESS OF OVERBURDEN	0.0 Ft.
7. DEPTH DRILLED INTO ROCK	0.0 Ft.
8. TOTAL DEPTH OF BORING	20.0 Ft.
9. SIZE AND TYPE OF BIT	3.0 In.
10. COORDINATE SYSTEM/DATUM	Florida State Plane East
HORIZONTAL	NAD 1983
VERTICAL	NAVD 88
11. MANUFACTURER'S DESIGNATION OF DRILL	Electric
☐ AUTO HAMMER ☐ MANUAL HAMMER	
12. TOTAL SAMPLES	
DISTURBED	
UNDISTURBED (UD)	
13. TOTAL NUMBER CORE BOXES	
14. ELEVATION GROUND WATER	
15. DATE BORING	STARTED 08-16-11 11:25
COMPLETED	08-16-11 11:27
16. ELEVATION TOP OF BORING	-2.9 Ft.
17. TOTAL RECOVERY FOR BORING	14.4 Ft.
18. SIGNATURE AND TITLE OF INSPECTOR	KD

ELEV. (ft)	DEPTH (ft)	LEGEND	CLASSIFICATION OF MATERIALS Depths and elevations based on measured values	% REC.	BOX OR SAMPLE	REMARKS (Shell Hash calculated from visual estimate of shell <4.75mm and >2.8mm.)
-2.9	0.0					
-3.9	1.0		SAND, fine grained, quartz, trace shell fragments, trace shell hash, trace silt, trace whole shell, shell fragments up to 1.25", whole shells up to 1.0", gray (2.5Y-6/1), (SW).		1	Sample #1, Depth = 0.5' Mean (mm): 0.27, Phi Sorting: 1.41 Fines (230): 2.44% (SW)
-4.7	1.8				2	Sample #2, Depth = 1.4' Mean (mm): 0.48, Phi Sorting: 2.25 Fines (230): 1.39% (SW)
-6.5	3.6		SAND, fine grained, quartz, little shell fragments, little shell hash, trace silt, trace whole shell, shell fragments up to 1.5", whole shells up to 1.25", gray (2.5Y-6/1), (SW).		3	Sample #3, Depth = 2.5' Mean (mm): 0.46, Phi Sorting: 2.27 Fines (230): 1.15% (SW)
-8.9	6.0		SAND, fine grained, quartz, trace shell fragments, trace shell hash, trace silt, trace whole shell, whole shells up to 1.0", shell fragments typically up to 1.5", silty pockets up to 0.5", (2.0"x1.0") shell fragment @ 2.6', 0.5" wood fragment @ 3.0', light gray (2.5Y-7/1), (SW).		4	Sample #4, Depth = 4.7' Mean (mm): 0.17, Phi Sorting: 0.52 Fines (230): 1.69% (SP)
-9.8	6.9				2	
-14.0	11.1		SAND, fine grained, quartz, trace organics, trace shell hash, trace silt, 1.0" silty pocket @ 3.8', (2.5"x0.5") clay pocket @ 4.1', (2.5"x0.25") wood fragment @ 4.1', gray (2.5Y-6/1), (SP). SAND, fine grained, quartz, little shell fragments, little shell hash, trace silt, trace whole shell, shell fragments and whole shells typically up to 1.5", (3.0"x2.0") shell fragment @ 6.4', gray (2.5Y-6/1), (SW).		5	Sample #5, Depth = 9.1' Mean (mm): 0.23, Phi Sorting: 0.65 Fines (230): 1.97% (SP)
-16.9	14.0		SAND, fine grained, quartz, little peat, trace shell hash, trace silt, trace whole shell, whole shells up to 1.0", peat distributed in laminae and pockets up to 3.0", (1.75"x1.5") rock fragment @ 8.8', (2.25"x0.75") wood fragment @ 10.1', (2.0"x1.5") shell fragment @ 11.0', light brownish gray (10YR-6/2), (SP).		6	Sample #6, Depth = 12.5' Mean (mm): 0.17, Phi Sorting: 0.54 Fines (230): 14.44% (SC)
-17.3	14.4		SAND, fine grained, quartz, little clay, (3.0"x1.0") white (2.5Y-8/1) pocket @ 11.3', gray (2.5Y-5/1), (SC). ROCK FRAGMENTS, some sand, trace clay, trace shell hash, rock fragments up to (3.0"x2.0"), gray (2.5Y-6/1), (GW). No Recovery.			
-22.9	20.0					
			End of Boring			

0 5 10 15 20 25

FLORIDA DEP ROSS WIGGINS PASS_2011_VCS.GPJ FL DEP ROSS.GDT 9/9/11

SAJ FORM 1836 **MODIFIED FOR THE FLORIDA DEP**
JUN 02 JUN 04

Site Vicinity Aerial Photograph

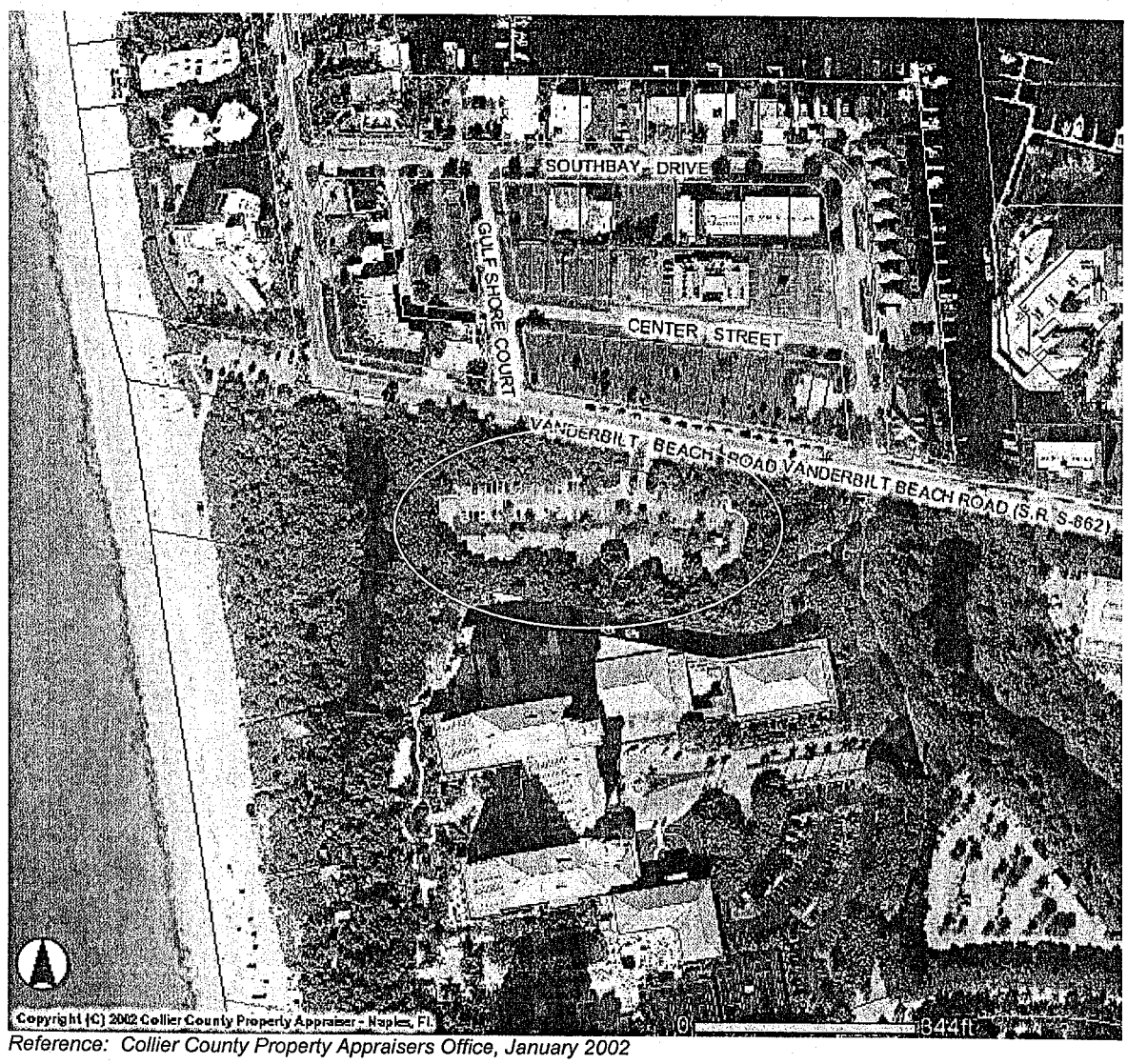

Reference: Collier County Property Appraisers Office, January 2002

PROPOSED VANDERBILT BEACH PARKING GARAGE

South of Vanderbilt Beach Road, East of Ritz Carlton Naples, Collier County, Florida

FORGE Project Number 864-001.01

FORGE ENGINEERING, INC.
FORENSIC, GEOTECHNICAL AND CONSTRUCTION CONSULTANTS
6200 Shirley Street, Suite 204
Naples, Florida 34109

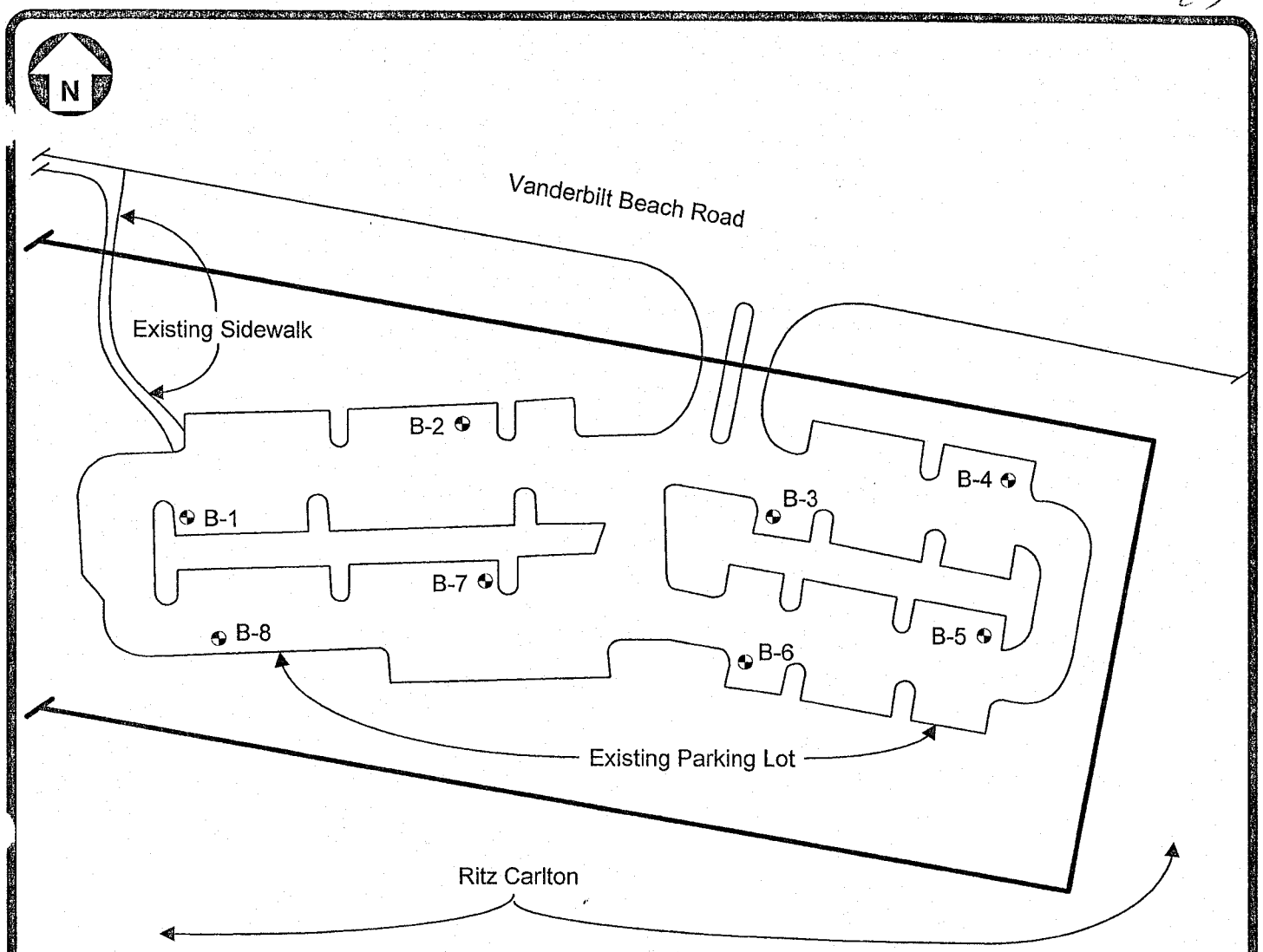

LEGEND

B-1 Number and Approximate Location of Soil Test Boring

0 60' 0" 100' 0" 200' 0"

Reference: Undated and untitled Site Plan of the existing Vanderbilt Beach Parking Lot.

Field Exploration Plan

PROPOSED VANDERBILT BEACH PARKING GARAGE

South of Vanderbilt Beach Road,
East of Ritz Carlton
Naples, Collier County, Florida

Forge Project No. 864-001.01

B-1

Depth,ft	N, bpf
	5
2.0	
	6
4.0	
	4 TOB
	7
	11
	12
15.0	
	###
17.0	###
	5
	5
	7
	11

B-2

Depth,ft	N, bpf
	7
2.0	
	9
4.0	
	7 TOB
	5
	8
13.0	
	2
	12
	8
	12
	13

B-3

Depth,ft	N, bpf
	8
3.0	
	5
	TOB
5.0	
	2
	3
	5
13.0	
	4
	5
	3
	6
33.0	
	7

B-4

Depth,ft	N, bpf
	8
	11
4.5	
	10 TOB
6.5	
	5
	4
	4
17.0	
	3
	6
	7
	11

B-5

Depth,ft	N, bpf
	8
3.0	
	3
	2 TOB
5.5	
	5
	7
11.0	
###	
13.0	###
	12
	2
	4
	7
	12

B-6

Depth,ft	N, bpf
	11
	12
5.0	
	TOB
	4
	3
	4
	4
	3
23.0	
	8
	13
	12

B-7

Depth,ft	N, bpf
	7
2.0	
	2
5.0	
	2 TOB
	3
	5
13.0	
	### 50/0"
	###
15.0	###
	10
	5
	8
	8

B-8

Depth,ft	N, bpf
	7
	9
4.5	
	6 TOB
	8
	7
13.5	
	8
15.5	
	###
16.5	###
	4
	11
	15
	12

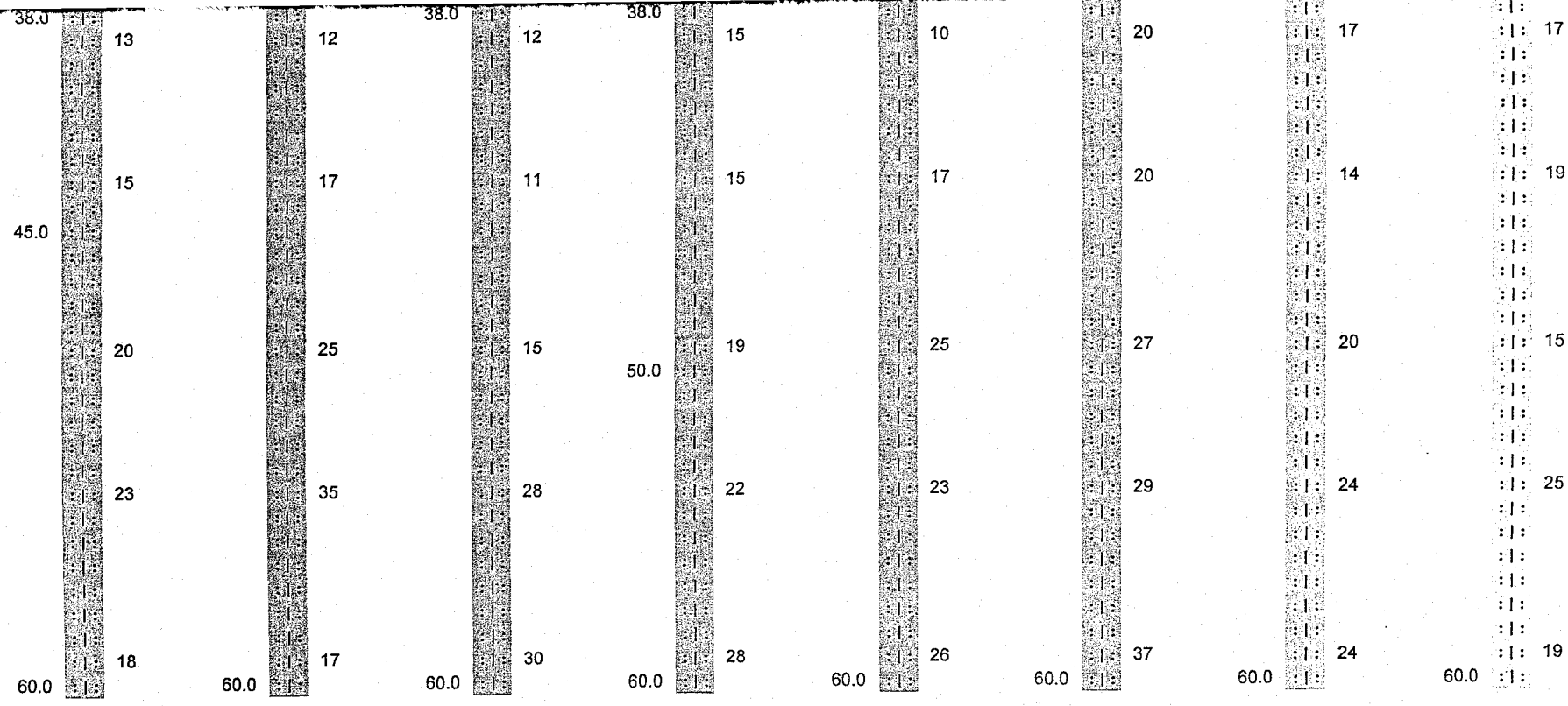

LEGEND

- SAND to Slightly Silty SAND, Occasional Roots
- Organic SAND, with Silt
- Silty SAND, Occasional Shell and Gravel (Weathered Limestone)
- LIMESTONE, (Caprock)

TOB Groundwater depth at Time Of Boring

Generalized Subsurface Profile

Vanderbilt Beach Parking Garage

South of Vanderbilt Beach Road, East of Ritz Carlton
Naples, Collier County, Florida

Forge Engineering Project No. 864-001.01

26

Depth (feet)	Strength	Primary >50%	Secondary >12%	Tertiary >5%	Color	Remarks	Elev. (feet)	Groundwater	Unified	AASHTO	Symbol	N B/F	N (blows per foot) 0 10 20 30 40 50	Water Content, %	Fines Content, %	Organic Content, %	Liquid Limit, %	Plasticity Index, %	Time Rate of Drilling (minutes:seconds)
	Loose											5	»»						
2.0		SAND		silt	brown	Occasional Roots			SP-SM										
	Loose											6	»»»	54		5			
4.0		SAND	Silt	organic	dark brown				SM										
	Very Loose							TOB				4	»»	32	14				
	Loose											7	»»»						
	Medium Dense											11	»»»»»						
	Medium Dense											12	»»»»»»						
15.0		SAND	Silt		gray	Occasional Shell			SM										
17.0		LIMESTONE				Caprock													
	Loose											5	»»						
	Loose											5	»»						
	Loose											7	»»»						

Continued On Next Page

Laboratory Test Results

Forge Engineering, Inc.
Naples, Florida

Project Name: Vanderbilt Bch. Parking Garage
Job Number: 864-001.01

Boring Number: B-1
Date Drilled: 6/23/2004

25

Depth (feet)	Strength	Primary >50%	Secondary >12%	Tertiary >5%	Color	Remarks	Elev. (feet)	Groundwater	Unified	AASHTO	Symbol	N B/F	N (blows per foot) 0 10 20 30 40 50	Laboratory Test Results: Water Content, %	Fines Content, %	Organic Content, %	Liquid Limit, %	Plasticity Index, %	Time Rate of Drilling (minutes:seconds)
31.0	Medium Dense											11	»»»»»						
38.0	Medium Dense	SAND	Silt	gravel	gray	Weathered Limestone			SM			13	»»»»»»						
45.0	Medium Dense	SAND	Silt	gravel	gray	Weathered Limestone			SM			15	»»»»»»»						
	Medium Dense											20	»»»»»»»»»»						
	Medium Dense											23	»»»»»»»»»»»						
60.0	Medium Dense	SAND	Silt	gravel	gray	Weathered Limestone			SM			18	»»»»»»»»»						
						Boring Terminated at 60.0 ft.													

Forge Engineering, Inc.
Naples, Florida

Sheet 2 of 2

Project Name: Vanderbilt Bch. Parking Garage
Job Number: 864-001.01

Boring Number: B-1
Date Drilled: 6/23/2004

26

Depth (feet)	Strength	Primary >50%	Secondary >12%	Tertiary >5%	Color	Remarks	Elev. (feet)	Groundwater	Unified	AASHTO	Symbol	N B/F	N (blows per foot) 0 10 20 30 40 50	Laboratory Test Results: Water Content, %	Fines Content, %	Organic Content, %	Liquid Limit, %	Plasticity Index, %	Time Rate of Drilling (minutes:seconds)
	Loose											7	»»»						
2.0		SAND			brown	Occasional Roots			SP										
	Loose									A-8		9	»»»»	252		42			
4.0		SAND	Organic	silt	dark brown				SP-SM										
	Loose							TOB				7	»»»						
	Loose											5	»»						
	Loose											8	»»»»						
13.0		SAND	Silt		gray	Occasional Shell			SM										
	Very Loose											2	»						
	Medium Dense											12	»»»»»»						
	Loose											8	»»»»						
	Medium Dense											12	»»»»»»						

Continued On Next Page

Forge Engineering, Inc.
Naples, Florida

Sheet 1 of 2

Project Name: Vanderbilt Bch. Parking Garage
Job Number: 864-001.01

Boring Number: B-2
Date Drilled: 6/23/2004

21

Depth (feet)	Material Description: Strength	Primary >50%	Secondary >12%	Tertiary >5%	Color	Remarks	Elev. (feet)	Groundwater	Unified	AASHTO	Symbol	N B/F	N (blows per foot) 0 10 20 30 40 50	Laboratory Test Results: Water Content, %	Fines Content, %	Organic Content, %	Liquid Limit, %	Plasticity Index, %	Time Rate of Drilling (minutes:seconds)
31.0																			
	Medium Dense											13	»»»»»»»						
	Medium Dense											12	»»»»»»»						
	Medium Dense											17	»»»»»»»»»						
	Medium Dense											25	»»»»»»»»»»»»»						
	Dense											35	»»»»»»»»»»»»»»»»»»						
	Medium Dense											17	»»»»»»»»»						
60.0		SAND	Silt	gravel	gray	Weathered Limestone			SM										
						Boring Terminated at 60.0 ft.													

Forge Engineering, Inc.
Naples, Florida

Sheet 2 of 2

Project Name: Vanderbilt Bch. Parking Garage
Job Number: 864-001.01

Boring Number: B-2
Date Drilled: 6/23/2004

Depth (feet)	Strength	Primary >50%	Secondary >12%	Tertiary >5%	Color	Remarks	Elev. (feet)	Groundwater	Unified	AASHTO	Symbol	N B/F	N (blows per foot) 0 10 20 30 40 50	Laboratory Test Results: Water Content, %	Fines Content, %	Organic Content, %	Liquid Limit, %	Plasticity Index, %	Time Rate of Drilling (minutes:seconds)
	Loose											8	»»»»						
3.0		SAND			brown	Occasional Roots			SP										
	Loose							TOB				5	»»						
5.0		SAND	Organic	silt	dark brown				SP-SM										
	Very Loose											2	»						
	Very Loose											3	»						
	Loose											5	»»						
13.0		SAND	Silt		gray	Occasional Shell			SM										
	Very Loose											4	»»						
	Loose											5	»»						
	Very Loose											3	»						
	Loose											6	»»»						

Continued On Next Page

Forge Engineering, Inc.
Naples, Florida

Project Name: Vanderbilt Bch. Parking Garage
Job Number: 864-001.01

Boring Number: B-3
Date Drilled: 6/22/2004

Depth (feet)	Strength	Primary >50%	Secondary >12%	Tertiary >5%	Color	Remarks	Elev. (feet)	Groundwater	Unified	AASHTO	Symbol	N B/F	N (blows per foot) 0 10 20 30 40 50	Water Content, %	Fines Content, %	Organic Content, %	Liquid Limit, %	Plasticity Index, %	Time Rate of Drilling (minutes:seconds)
31.0																			
33.0	Loose	SAND	Silt	gravel	gray	Weathered Limestone			SM			7	»»»						
38.0	Medium Dense	SAND	Silt	gravel	gray	Weathered Limestone			SM			12	»»»»»»						
	Medium Dense											11	»»»»»						
	Medium Dense											15	»»»»»»»						
	Medium Dense											28	»»»»»»»»»»»»»»						
	Medium Dense											30	»»»»»»»»»»»»»»»						
60.0		SAND	Silt	gravel	gray	Weathered Limestone			SM										
						Boring Terminated at 60.0 ft.													

Laboratory Test Results

Forge Engineering, Inc.
Naples, Florida

Sheet 2 of 2

Project Name: Vanderbilt Bch. Parking Garage
Job Number: 864-001.01

Boring Number: B-3
Date Drilled: 6/22/2004

30

Depth (feet)	Strength	Primary >50%	Secondary >12%	Tertiary >5%	Color	Remarks	Elev. (feet)	Groundwater	Unified	AASHTO	Symbol	N B/F	N (blows per foot) 0 10 20 30 40 50	Water Content, %	Fines Content, %	Organic Content, %	Liquid Limit, %	Plasticity Index, %	Time Rate of Drilling (minutes:seconds)
	Loose											8	»»»»						
	Medium Dense											11	»»»»»						
4.5		SAND			brown	Occasional Roots			SP										
	Loose							TOB		A-8		10	»»»»»	105		12			
6.5		SAND	Organic	silt	dark brown				SP-SM										
	Loose											5	»»						
	Very Loose											4	»»						
	Very Loose											4	»»						
17.0		SAND	Silt		gray	Occasional Shell			SM										
	Very Loose											3	»						
	Loose											6	»»»						
	Loose											7	»»»						

Continued On Next Page

Laboratory Test Results

Forge Engineering, Inc.
Naples, Florida

Project Name: Vanderbilt Bch. Parking Garage
Job Number: 864-001.01

Boring Number: B-4
Date Drilled: 6/22/2004

3

Depth (feet)	Strength	Primary >50%	Secondary >12%	Tertiary >5%	Color	Remarks	Elev. (feet)	Groundwater	Unified	AASHTO	Symbol	N B/F	N (blows per foot) 0 10 20 30 40 50	Laboratory Test Results: Water Content, %	Fines Content, %	Organic Content, %	Liquid Limit, %	Plasticity Index, %	Time Rate of Drilling (minutes:seconds)
31.0	Medium Dense											11	»»»»»						
38.0		SAND	Silt	gravel	gray	Weathered Limestone			SM										
	Medium Dense											15	»»»»»»»						
	Medium Dense											15	»»»»»»»						
50.0	Medium Dense	SAND	Silt	gravel	gray	Weathered Limestone			SM			19	»»»»»»»»»						
	Medium Dense											22	»»»»»»»»»»»						
60.0	Medium Dense	SAND	Silt	gravel	gray	Weathered Limestone			SM			28	»»»»»»»»»»»»»						
						Boring Terminated at 60.0 ft.													

Forge Engineering, Inc.
Naples, Florida

Sheet 2 of 2

Project Name: Vanderbilt Bch. Parking Garage
Job Number: 864-001.01

Boring Number: B-4
Date Drilled: 6/22/2004

32

Depth (feet)	Strength	Primary >50%	Secondary >12%	Tertiary >5%	Color	Remarks	Elev. (feet)	Groundwater	Unified	AASHTO	Symbol	N B/F	N (blows per foot) 0 10 20 30 40 50	Laboratory Test Results: Water Content, %	Fines Content, %	Organic Content, %	Liquid Limit, %	Plasticity Index, %	Time Rate of Drilling (minutes:seconds)
	Loose											8	»»»»						
3.0		SAND			brown	Occasional Roots			SP										
	Very Loose											3	»						
	Very Loose							TOB				2	»						
5.5		SAND	Organic	silt	dark brown				SP-SM										
	Loose											5	»»						
	Loose											7	»»»						
11.0		SAND	Silt		gray	Occasional Shell			SM										
13.0		LIMESTONE				Caprock					### ###								
	Medium Dense											12	»»»»»»						
	Very Loose											2	»						
	Very Loose											4	»»						
	Loose											7	»»»						

Continued On Next Page

Forge Engineering, Inc.
Naples, Florida

Project Name: Vanderbilt Bch. Parking Garage
Job Number: 864-001.01

Boring Number: B-5
Date Drilled: 6/22/2004

33

Depth (feet)	Strength	Primary >50%	Secondary >12%	Tertiary >5%	Color	Remarks	Elev. (feet)	Groundwater	Unified	AASHTO	Symbol	N B/F	N (blows per foot) 0 10 20 30 40 50	Laboratory Test Results: Water Content, %	Fines Content, %	Organic Content, %	Liquid Limit, %	Plasticity Index, %	Time Rate of Drilling (minutes:seconds)
31.0																			
	Medium Dense											12	»»»»»»»						
	Loose											10	»»»»»						
	Medium Dense											17	»»»»»»»»						
	Medium Dense											25	»»»»»»»»»»»»						
	Medium Dense											23	»»»»»»»»»»»»						
	Medium Dense											26	»»»»»»»»»»»»»»						
60.0		SAND	Silt	gravel	gray	Weathered Limestone			SM										
						Boring Terminated at 60.0 ft.													

Forge Engineering, Inc.
Naples, Florida

Sheet 2 of 2

Project Name: Vanderbilt Bch. Parking Garage
Job Number: 864-001.01

Boring Number: B-5
Date Drilled: 6/22/2004

34

Depth (feet)	Strength	Primary >50%	Secondary >12%	Tertiary >5%	Color	Remarks	Elev. (feet)	Groundwater	Unified	AASHTO	Symbol	N B/F	N (blows per foot) 0 10 20 30 40 50	Laboratory Test Results: Water Content, %	Fines Content, %	Organic Content, %	Liquid Limit, %	Plasticity Index, %	Time Rate of Drilling (minutes:seconds)
	Medium Dense											11	»»»»»						
	Medium Dense											12	»»»»»»						
5.0		SAND			brown	Occasional Roots		TOB	SP										
	Very Loose											4	»»						
	Very Loose											3	»						
	Very Loose											4	»»						
	Very Loose											4	»»						
	Very Loose											3	»						
23.0		SAND	Silt		gray	Occasional Shell			SM										
	Loose											8	»»»»						
	Medium Dense											13	»»»»»»						
						Continued On Next Page													

Forge Engineering, Inc.
Naples, Florida

Sheet 1 of 2

Project Name: Vanderbilt Bch. Parking Garage
Job Number: 864-001.01

Boring Number: B-6
Date Drilled: 06/21/044

Depth (feet)	Strength	Primary >50%	Secondary >12%	Tertiary >5%	Color	Remarks	Elev. (feet)	Groundwater	Unified	AASHTO	Symbol	N B/F	N (blows per foot) 0 10 20 30 40 50	Water Content, %	Fines Content, %	Organic Content, %	Liquid Limit, %	Plasticity Index, %	Time Rate of Drilling (minutes:seconds)
31.0																			
	Medium Dense											12	»»»»»»						
	Medium Dense											20	»»»»»»»»»»»»						
	Medium Dense											20	»»»»»»»»»»»»						
	Medium Dense											27	»»»»»»»»»»»»»»						
	Medium Dense											29	»»»»»»»»»»»»»»»						
	Dense											37	»»»»»»»»»»»»»»»»»»»						
60.0		SAND	Silt	gravel	gray	Weathered Limestone			SM										
						Boring Terminated at 60.0 ft.													

Laboratory Test Results

Forge Engineering, Inc.
Naples, Florida

Sheet 2 of 2

Project Name: Vanderbilt Bch. Parking Garage
Job Number: 864-001.01

Boring Number: B-6
Date Drilled: 06/21/044

36

Depth (feet)	Strength	Primary >50%	Secondary >12%	Tertiary >5%	Color	Remarks	Elev. (feet)	Groundwater	Unified	AASHTO	Symbol	N B/F	N (blows per foot) 0 10 20 30 40 50	Water Content, %	Fines Content, %	Organic Content, %	Liquid Limit, %	Plasticity Index, %	Time Rate of Drilling (minutes:seconds)
	Loose											7	»»»						
2.0		SAND			brown	Occasional Roots			SP										
	Very Loose											2	»						
5.0		SAND	Organic	silt	dark brown				SP-SM										
	Very Loose							TOB				2	»						
	Very Loose											3	»						
	Loose											5	»»						
13.0		SAND	Silt		gray	Occasional Shell			SM										
	Very Hard										###	50/0"	»»»»»»»»»»»»»»»»»»»»»»»»»»»»»+						
15.0		LIMESTONE				Caprock					###								
	Loose											10	»»»»»						
	Loose											5	»»						
	Loose											8	»»»»						

Continued On Next Page

Laboratory Test Results

Forge Engineering, Inc.
Naples, Florida

Project Name: Vanderbilt Bch. Parking Garage
Job Number: 864-001.01

Boring Number: B-7
Date Drilled: 6/21/2004

Depth (feet)	Strength	Primary >50%	Secondary >12%	Tertiary >5%	Color	Remarks	Elev. (feet)	Groundwater	Unified	AASHTO	Symbol	N B/F	N (blows per foot) 0 10 20 30 40 50	Laboratory Test Results: Water Content, %	Fines Content, %	Organic Content, %	Liquid Limit, %	Plasticity Index, %	Time Rate of Drilling (minutes:seconds)
31.0																			
	Loose											8	»»»»						
	Medium Dense											17	»»»»»»»»»						
	Medium Dense											14	»»»»»»»»						
	Medium Dense											20	»»»»»»»»»»»						
	Medium Dense											24	»»»»»»»»»»»»»						
	Medium Dense											24	»»»»»»»»»»»»»						
60.0		SAND	Silt	gravel	gray	Weathered Limestone			SM										
						Boring Terminated at 60.0 ft.													

Forge Engineering, Inc.
Naples, Florida

Sheet 2 of 2

Project Name: Vanderbilt Bch. Parking Garage
Job Number: 864-001.01

Boring Number: B-7
Date Drilled: 6/21/2004

38

Depth (feet)	Strength	Primary >50%	Secondary >12%	Tertiary >5%	Color	Remarks	Elev. (feet)	Groundwater	Unified	AASHTO	Symbol	N B/F	N (blows per foot) 0 10 20 30 40 50	Laboratory Test Results: Water Content, %	Fines Content, %	Organic Content, %	Liquid Limit, %	Plasticity Index, %	Time Rate of Drilling (minutes:seconds)
	Loose											7	»»»						
	Loose											9	»»»»						
4.5		SAND			brown				SP										
	Loose							TOB				6	»»»						
	Loose											8	»»»»						
	Loose											7	»»»						
13.5		SAND	Silt		gray	Occasional Shell			SM										
	Loose											8	»»»»						
15.5		SAND	Silt	gravel	gray				SM										
16.5		LIMESTONE				Caprock					### ###								
	Very Loose											4	»»						
	Medium Dense											11	»»»»»						
	Medium Dense											15	»»»»»»»						

Continued On Next Page

Forge Engineering, Inc.
Naples, Florida

Project Name: Vanderbilt Bch. Parking Garage
Job Number: 864-001.01

Boring Number: B-8
Date Drilled: 6/24/2004

39

Depth (feet)	Strength	Primary >50%	Secondary >12%	Tertiary >5%	Color	Remarks	Elev. (feet)	Groundwater	Unified	AASHTO	Symbol	N B/F	N (blows per foot) 0 10 20 30 40 50	Laboratory Test Results: Water Content, %	Fines Content, %	Organic Content, %	Liquid Limit, %	Plasticity Index, %	Time Rate of Drilling (minutes:seconds)
31.0																			
	Medium Dense											12	»»»»»»»						
	Medium Dense											17	»»»»»»»»»						
	Medium Dense											19	»»»»»»»»»						
	Medium Dense											15	»»»»»»»						
	Medium Dense											25	»»»»»»»»»»»»						
	Medium Dense											19	»»»»»»»»»						
60.0		SAND	Silt	gravel	gray	Weathered Limestone			SM										
						Boring Terminated at 60.0 ft.													

Forge Engineering, Inc.
Naples, Florida

Sheet 2 of 2

Project Name: Vanderbilt Bch. Parking Garage
Job Number: 864-001.01

Boring Number: B-8
Date Drilled: 6/24/2004

40

Depth (feet)	Material Description: Strength	Primary >50%	Secondary >12%	Tertiary >5%	Color	Remarks	Elev. (feet)	Groundwater	Unified	AASHTO	Symbol	N B/F	N (blows per foot) 0 10 20 30 40 50	Laboratory Test Results: Water Content, %	Fines Content, %	Organic Content, %	Liquid Limit, %	Plasticity Index, %	Other

Primary soil type: Over 50% of soil by visual estimation or laboratory test

Secondary soil type: Between 12% and 50% of soil by visual estimation or laboratory test

Tertiary soil type: Between 5% and 12% of soil by visual estimation or laboratory test

N: Standard Penetration Resistance.
Number of blows to drive a standard split-spoon sampler one foot using a 140 pound hammer dropping 30 inches

woh: Split-spoon penetrated soil under weight of 140 pound hammer only.

wor: Split-spoon penetrated soil under weight of drill rods only.

Table of Strength Descriptions

N	Sand / Gravel	Silt / Clay	Limestone / Sandstone
0	Very Loose	Very Soft	Very Soft
2	Very Loose	Very Soft	Very Soft
3	Very Loose	Soft	Very Soft
4	Very Loose	Soft	Very Soft
5	Loose	Firm	Very Soft
8	Loose	Firm	Very Soft
9	Loose	Stiff	Very Soft
10	Loose	Stiff	Very Soft
11	Medium Dense	Stiff	Soft
15	Medium Dense	Stiff	Soft
16	Medium Dense	Very Stiff	Soft
30	Medium Dense	Very Stiff	Soft
31	Dense	Hard	Soft
50	Dense	Hard	Soft
51	Very Dense	Hard	Hard
60	Very Dense	Hard	Hard
100	Very Dense	Hard	Very Hard
100+	Very Dense	Hard	Very Hard

Symbol Key

GRAVEL	*
SAND	:
SILT	|
CLAY	/
LIMESTONE	#
DEBRIS	D
FILL	F
PEAT	~
ORGANIC	~
LIMEROCK	L
PAVEMENT	P
CONCRETE	C
WATER	W
VOID	V

Laboratory Test Summary

Water Content:	Weight of Water / Weight of all Dry Soil
Fines Content:	Weight of Dry Soil Finer than No. 200 Sieve / Weight of all Dry Soil
Organic Content:	Weight of Organics Lost by Ignition / Weight of all Dry Soil
Liquid Limit:	Moisture content of a soil at the transition between liquid and plastic states. (ASTM D-4318)
Plastic Limit:	Moisture content of a soil at the transition between plastic and semisolid states. (ASTM D-4318)
Plasticity Index:	Liquid Limit - Plastic Limit

15.0 Depth of soil change. The transition between materials may be gradual. Soil conditions will vary between boring locations.

All descriptions are based on the visual examination of the retrieved soil samples, unless laboratory data is indicated. Therefore, estimates of material types and concentrations should be considered approximate.

Primary Soil Symbol
Secondary Soil Symbol, primary if no secondary is present
AASHTO Soil Classification Symbol
Unified Soil Classification Symbol
SP A-3

Representative Material Description Definitions

Sand	Material that pass a No. 4 and is retained on a No. 200 sieve.
Silt	Low plasticity material that passes a No. 200 sieve.
Clay	Moderate to high plasticity soil that passes a No. 200 sieve.
Limestone	Natural occurring rock with at least 50% calcium carbonate.
Sandstone	Natural occurring rock of hardened (not by calcium carbonate) sand-size particles.
Limerock	Mined or processed limestone used as a fill or pavement base.
Organic	Containing partially decomposed material that can be ignited when dried.

Groundwater Symbols

TOB	Initial groundwater level at time of boring
GWL	Groundwater level measured a day or more after drilling
LOSS	Drill fluid circulation loss

Forge Engineering, Inc.
Naples/Fort Myers Florida

Key To Boring Log Classification

19

Appendix D - Record of Test Borings

GFA International, Inc
5851 Country Lakes Drive
Fort Myers, Florida 33905
239-489-2443 P
239-489-3438 F

BORING NUMBER B-1

CLIENT Hanson Professional Services, Inc.
PROJECT NAME Runway 14-32 Drainage Improvements
PROJECT NUMBER 14-1623
PROJECT LOCATION 160 Aviation Drive North, Naples
DATE STARTED 7/14/14 **COMPLETED** 7/14/14
GROUND ELEVATION N/A
DRILLING CONTRACTOR GFA International
GROUND WATER LEVEL:
DRILLING METHOD SPT/ MUD ROTARY
▽ **ENCOUNTERED AT (ft):** 2.5
DRILLED BY Greg Cole
NOTES Ground Water Level @ 1-hour: 2.5'

DEPTH (ft)	SPT	GRAPHIC LOG	MAIN SOIL COMPONENT	OTHER COMPONENTS	BLOW COUNTS (N VALUE)	RECOVERY % (RQD)
0			SAND (SP) Very Loose to Loose	Gray to light gray (Moisture Content = 31.5%).	1-1-3-3 (4)	100
				Light gray (Moisture Content = 21.4%).	3-4-6-7 (10)	100
5				Light gray to dark brown (Moisture Content = 22.6%).	2-1-0-1 (1)	100
				Brown (Moisture Content = 22.1%).	1-1-2-2 (3)	100
			SAND WITH SILT (SP-SM)	Brown with traces of fine gravel (Moisture Content = 40.5%).	50/5"	20
10			LIMESTONE (LS) Very Dense			

Bottom of hole at 10.0 feet.

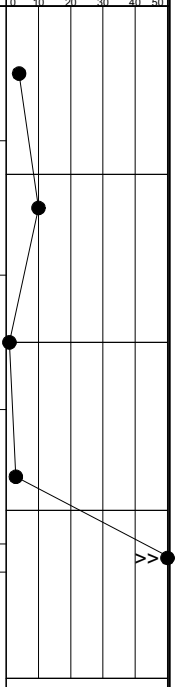

GFA International, Inc
5851 Country Lakes Drive
Fort Myers, Florida 33905
239-489-2443 P
239-489-3438 F

BORING NUMBER B-2

CLIENT Hanson Professional Services, Inc.
PROJECT NAME Runway 14-32 Drainage Improvements
PROJECT NUMBER 14-1623
PROJECT LOCATION 160 Aviation Drive North, Naples
DATE STARTED 7/14/14 **COMPLETED** 7/14/14
GROUND ELEVATION N/A
DRILLING CONTRACTOR GFA International
GROUND WATER LEVEL:
DRILLING METHOD SPT/ MUD ROTARY
▽ **ENCOUNTERED AT (ft):** 1.6
DRILLED BY Greg Cole
NOTES Ground Water Level @ 1-hour: 1.6'

DEPTH (ft)	SPT	GRAPHIC LOG	MAIN SOIL COMPONENT	OTHER COMPONENTS	BLOW COUNTS (N VALUE)	RECOVERY % (RQD)
0			SAND (SP) Loose to Medium Dense	Gray to light gray (Moisture Content = 13.5%).	1-3-6-7 (9)	100
				Light gray to dark brown (Moisture Content = 20.5%).	5-9-9-8 (18)	100
5				Dark brown (Moisture Content = 17.2%).	5-6-6-6 (12)	100
			SAND WITH SILT (SP-SM) Loose	Dark brown to borwn with some silt (Moisture Content = 19.5%).	4-3-3-4 (6)	100
10			LIMESTONE (LS) Very Dense	Rock (Moisture Content = 40.4%).	50/2"	10
				Bottom of hole at 10.0 feet.		

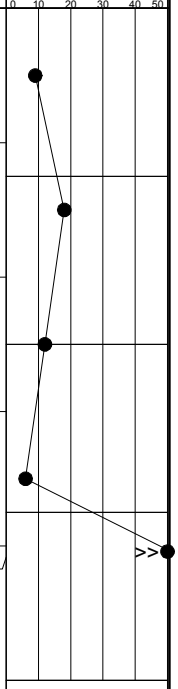

GFA International, Inc
5851 Country Lakes Drive
Fort Myers, Florida 33905
239-489-2443 P
239-489-3438 F

BORING NUMBER B-3

CLIENT Hanson Professional Services, Inc.
PROJECT NAME Runway 14-32 Drainage Improvements
PROJECT NUMBER 14-1623
PROJECT LOCATION 160 Aviation Drive North, Naples
DATE STARTED 7/14/14 **COMPLETED** 7/14/14
GROUND ELEVATION N/A
DRILLING CONTRACTOR GFA International
GROUND WATER LEVEL:
DRILLING METHOD SPT/ MUD ROTARY
▽ **ENCOUNTERED AT (ft):** 1.0
DRILLED BY Greg Cole
NOTES Ground Water Level @ 1-hour: 1.1'

DEPTH (ft)	SPT	GRAPHIC LOG	MAIN SOIL COMPONENT	OTHER COMPONENTS	BLOW COUNTS (N VALUE)	RECOVERY % (RQD)
0			SAND (SP) Loose	Gray to light gray (Moisture Content = 17.2%).	1-3-4-7 (7)	100
				Light gray to dark brown (Moisture Content = 21.3%).	4-5-5-5 (10)	100
5				Brown (Moisture Content = 43.0%).	4-4-5-5 (9)	100
				Brown to rock (Moisture Content = 24.0%).	2-15/2"	25
			LIMESTONE (LS) Very Dense	No recovery.	50/0"	0
10				Bottom of hole at 10.0 feet.		

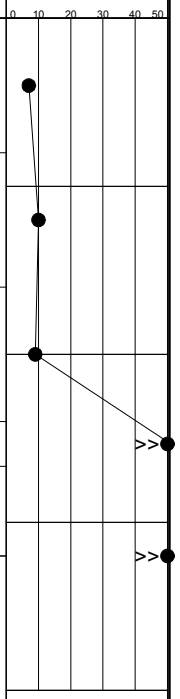

GFA International, Inc
5851 Country Lakes Drive
Fort Myers, Florida 33905
239-489-2443 P
239-489-3438 F

BORING NUMBER B-4

CLIENT Hanson Professional Services, Inc.
PROJECT NAME Runway 14-32 Drainage Improvements
PROJECT NUMBER 14-1623
PROJECT LOCATION 160 Aviation Drive North, Naples
DATE STARTED 7/14/14 **COMPLETED** 7/14/14
GROUND ELEVATION N/A
DRILLING CONTRACTOR GFA International
GROUND WATER LEVEL:
DRILLING METHOD SPT/ MUD ROTARY
▽ **ENCOUNTERED AT (ft):** 2.1
DRILLED BY Greg Cole
NOTES Ground Water Level @ 1-hour: 2.0'

DEPTH (ft)	SPT	GRAPHIC LOG	MAIN SOIL COMPONENT	OTHER COMPONENTS	BLOW COUNTS (N VALUE)	RECOVERY % (RQD)
0			SAND (SP) Very Loose to Medium Dense	Gray to light gray (Moisture Content = 16.3%).	1-1-2-4 (3)	100
				Light gray (Moisture Content = 22.5%).	3-5-7-7 (12)	100
5				Light gray to dark brown with traces of roots and organics (Moisture Content = 21.1%).	3-5-6-7 (11)	100
			SAND WITH SILT (SP-SM) Loose	Brown (Moisture Content = 19.6%).	4-4-5-4 (9)	100
10				Dark brown to gray with limestone (Moisture Content = 41.7%).	4-3-4-3 (7)	100
				Bottom of hole at 10.0 feet.		

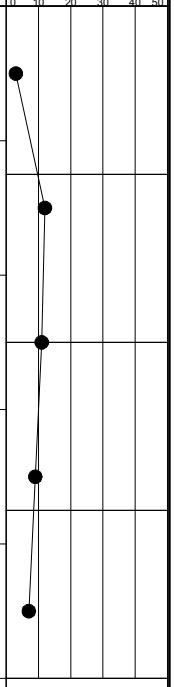

GFA International, Inc
5851 Country Lakes Drive
Fort Myers, Florida 33905
239-489-2443 P
239-489-3438 F

BORING NUMBER B-5

CLIENT Hanson Professional Services, Inc.
PROJECT NAME Runway 14-32 Drainage Improvements
PROJECT NUMBER 14-1623
PROJECT LOCATION 160 Aviation Drive North, Naples
DATE STARTED 7/14/14 **COMPLETED** 7/14/14
GROUND ELEVATION N/A
DRILLING CONTRACTOR GFA International
GROUND WATER LEVEL:
DRILLING METHOD SPT/ MUD ROTARY
▽ **ENCOUNTERED AT (ft):** 1.5
DRILLED BY Greg Cole
NOTES Ground Water Level @ 1-hour: 1.4'

DEPTH (ft)	SPT	GRAPHIC LOG	MAIN SOIL COMPONENT	OTHER COMPONENTS	BLOW COUNTS (N VALUE)	RECOVERY % (RQD)
0			SAND (SP) Loose to Medium Dense	Gray (Moisture Content = 15.4%).	2-3-5-8 (8)	100
				Light gray to dark gray (Moisture Content = 20.8%).	5-10-12-13 (22)	100
5				Gray to dark brown (Moisture Content = 16.5%).	10-12-12-12 (24)	100
				Brown (Moisture Content = 20.2%).	5-6-7-8 (13)	100
10			SAND WITH SILT (SP-SM) Loose	Brown to gray with limestone (Moisture Content = 43.5%).	4-3-2-3 (5)	100
				Bottom of hole at 10.0 feet.		

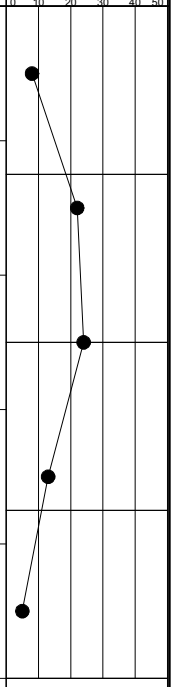

GFA International, Inc
5851 Country Lakes Drive
Fort Myers, Florida 33905
239-489-2443 P
239-489-3438 F

BORING NUMBER B-6

CLIENT Hanson Professional Services, Inc.
PROJECT NAME Runway 14-32 Drainage Improvements
PROJECT NUMBER 14-1623
PROJECT LOCATION 160 Aviation Drive North, Naples
DATE STARTED 7/14/14 **COMPLETED** 7/14/14
GROUND ELEVATION N/A
DRILLING CONTRACTOR GFA International
GROUND WATER LEVEL:
DRILLING METHOD SPT/ MUD ROTARY
ENCOUNTERED AT (ft):
DRILLED BY Greg Cole
NOTES

DEPTH (ft)	SPT	GRAPHIC LOG	MAIN SOIL COMPONENT	OTHER COMPONENTS	BLOW COUNTS (N VALUE)	RECOVERY % (RQD)
0			SAND (SP) Loose to Medium Dense	Brown to gray (Moisture Content = 12.3%).	1-3-5-7 (8)	100
				Gray to light gray (Moisture Content = 19.8%).	8-14-14-12 (28)	100
5			SAND WITH SILT (SP-SM) Loose to Very Dense	Light gray to dark brown to light gray (Moisture Content = 17.1%).	4-5-4-32 (9)	100
				Brown to rock (Moisture Content = 18.0%).	10-11-18-50/1"	75
			LIMESTONE (LS) Very Dense	No recovery.	50/0"	0
10				Bottom of hole at 10.0 feet.		

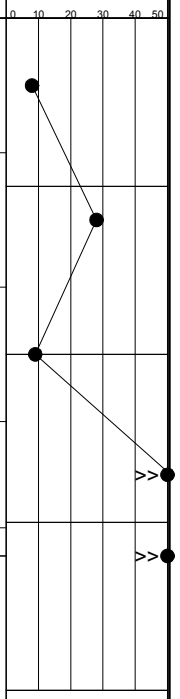

GFA International, Inc
5851 Country Lakes Drive
Fort Myers, Florida 33905
239-489-2443 P
239-489-3438 F

BORING NUMBER B-7

CLIENT Hanson Professional Services, Inc.
PROJECT NAME Runway 14-32 Drainage Improvements
PROJECT NUMBER 14-1623
PROJECT LOCATION 160 Aviation Drive North, Naples
DATE STARTED 7/14/14 **COMPLETED** 7/14/14
GROUND ELEVATION N/A
DRILLING CONTRACTOR GFA International
GROUND WATER LEVEL:
DRILLING METHOD SPT/ MUD ROTARY
▽ **ENCOUNTERED AT (ft):** 1.2
DRILLED BY Greg Cole
NOTES Ground Water Level @ 1-hour: 0.6'

DEPTH (ft)	SPT	GRAPHIC LOG	MAIN SOIL COMPONENT	OTHER COMPONENTS	BLOW COUNTS (N VALUE)	RECOVERY % (RQD)
0			SAND (SP) Loose	Brown to gray (Moisture Content = 12.8%).	2-3-3-4 (6)	100
				Gray to brown (Moisture Content = 16.8%).	6-11-12-11 (23)	100
			SILTY SAND (SM) Medium Dense			
5			SAND WITH SILT (SP-SM) Very Dense	Brown to light gray with some fine gravel (Moisture Content = 35.1%).	11-50/5"	45
			LIMESTONE (LS) Very Dense	No recovery.	50/0"	0
10			WEATHERED LIMESTONE (WLS) Loose	Light gray (Moisture Content = 38.6%).	7-3-3-3 (6)	100
				Bottom of hole at 10.0 feet.		

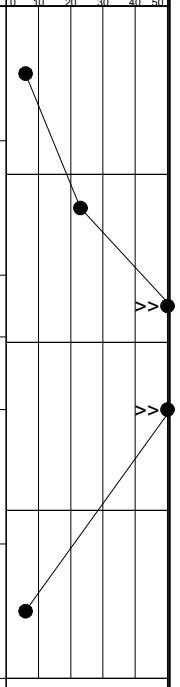

GFA International, Inc
5851 Country Lakes Drive
Fort Myers, Florida 33905
239-489-2443 P
239-489-3438 F

BORING NUMBER B-8

CLIENT Hanson Professional Services, Inc.
PROJECT NAME Runway 14-32 Drainage Improvements
PROJECT NUMBER 14-1623
PROJECT LOCATION 160 Aviation Drive North, Naples
DATE STARTED 7/14/14 **COMPLETED** 7/14/14
GROUND ELEVATION N/A
DRILLING CONTRACTOR GFA International
GROUND WATER LEVEL:
DRILLING METHOD SPT/ MUD ROTARY
▽ **ENCOUNTERED AT (ft):** 1.1
DRILLED BY Greg Cole
NOTES Ground Water Level @ 1-hour: 1.1'

DEPTH (ft)	SPT	GRAPHIC LOG	MAIN SOIL COMPONENT	OTHER COMPONENTS	BLOW COUNTS (N VALUE)	RECOVERY % (RQD)
0			▽ SAND (SP) Loose	Gray to light gray (Moisture Content = 37.3%).	2-4-5-8 (9)	100
			SAND WITH SILT (SP-SM) Medium Dense	Gray to brown (Moisture Content = 19.4%).	6-6-6-4 (12)	100
				Brown with fine and coarse gravel (Moisture Content = 19.2%).	50/4"	20
5			LIMESTONE (LS) Very Dense	No recovery.	50/0"	0
			WEATHERED LIMESTONE (WLS) Medium Dense	Light gray (Moisture Content = 21.7%).	14-11-9-6 (20)	100
10				Bottom of hole at 10.0 feet.		

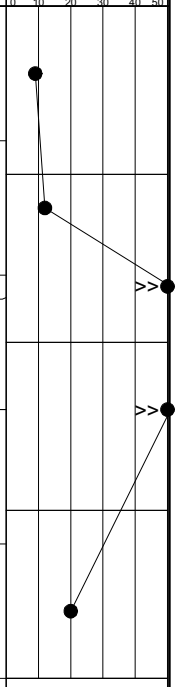

GFA International, Inc
5851 Country Lakes Drive
Fort Myers, Florida 33905
239-489-2443 P
239-489-3438 F

BORING NUMBER B-9

CLIENT Hanson Professional Services, Inc.
PROJECT NAME Runway 14-32 Drainage Improvements
PROJECT NUMBER 14-1623
PROJECT LOCATION 160 Aviation Drive North, Naples
DATE STARTED 7/14/14 **COMPLETED** 7/14/14
GROUND ELEVATION N/A
DRILLING CONTRACTOR GFA International
GROUND WATER LEVEL:
DRILLING METHOD SPT/ MUD ROTARY
▽ **ENCOUNTERED AT (ft):** 1.6
DRILLED BY Greg Cole
NOTES Ground Water Level @ 1-hour: 1.3' (RAIN)

DEPTH (ft)	SPT	GRAPHIC LOG	MAIN SOIL COMPONENT	OTHER COMPONENTS	BLOW COUNTS (N VALUE)	RECOVERY % (RQD)
0			SAND (SP) Loose	Gray with some fine roots (Moisture Content = 13.0%).	1-3-5-7 (8)	100
			SAND WITH SILT (SP-SM) Medium Dense	Brown to range with traces of fine gravel (Moisture Content = 18.8%).	5-7-6-6 (13)	100
5			SAND (SP) Medium Dense	Light gray with traces of shell (Moisture Content = 45.5%).	4-6-11-50/5"	95
			LIMESTONE (LS) Very Dense	No recovery.	50/0"	0
10			WEATHERED LIMESTONE (WLS) Very Dense	Gray with rock and shell (Moisture Content = 11.8%).	33-24-50/0"	50
				Bottom of hole at 10.0 feet.		

● N-VALUE CURVE

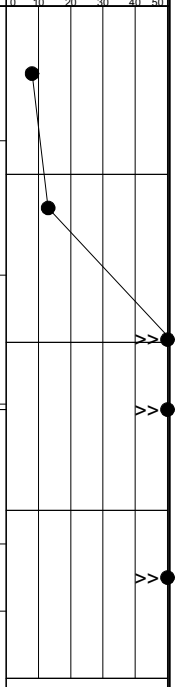

GFA International, Inc
5851 Country Lakes Drive
Fort Myers, Florida 33905
239-489-2443 P
239-489-3438 F

BORING NUMBER B-10

CLIENT Hanson Professional Services, Inc.
PROJECT NAME Runway 14-32 Drainage Improvements
PROJECT NUMBER 14-1623
PROJECT LOCATION 160 Aviation Drive North, Naples
DATE STARTED 7/14/14 **COMPLETED** 7/14/14
GROUND ELEVATION N/A
DRILLING CONTRACTOR GFA International
GROUND WATER LEVEL:
DRILLING METHOD SPT/ MUD ROTARY
▽ **ENCOUNTERED AT (ft):** 0.75
DRILLED BY Greg Cole
NOTES Ground Water Level @ 1-hour: 0.6' (RAIN)

DEPTH (ft)	SPT	GRAPHIC LOG	MAIN SOIL COMPONENT	OTHER COMPONENTS	BLOW COUNTS (N VALUE)	RECOVERY % (RQD)
0			▽ SAND (SP) Loose	Gray with traces of fine roots (Moisture Content = 21.3%).	1-2-3-5 (5)	100
			WEATHERED LIMESTONE (WLS) Dense	Gray to light gray with shell (Moisture Content = 25.5%).	18-30-12-10 (42)	100
5			SAND (SP)	Light gray with traces of shell and with fine and coarse gravel (Moisture Content = 39.1%).	5-11-50/4"	70
			LIMESTONE (LS) Very Dense	No recovery.	50/0"	0
				No recovery.	50/0"	0
10				Bottom of hole at 10.0 feet.		

N-VALUE CURVE

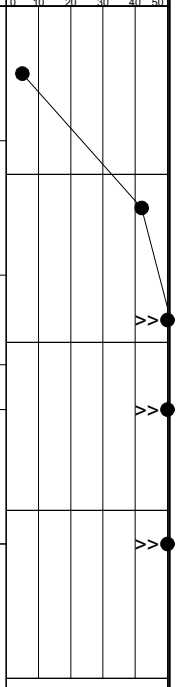

GFA International, Inc
5851 Country Lakes Drive
Fort Myers, Florida 33905
239-489-2443 P
239-489-3438 F

BORING NUMBER B-11

CLIENT Hanson Professional Services, Inc.
PROJECT NAME Runway 14-32 Drainage Improvements
PROJECT NUMBER 14-1623
PROJECT LOCATION 160 Aviation Drive North, Naples
DATE STARTED 7/14/14 **COMPLETED** 7/14/14
GROUND ELEVATION N/A
DRILLING CONTRACTOR GFA International
GROUND WATER LEVEL:
DRILLING METHOD SPT/ MUD ROTARY
ENCOUNTERED AT (ft): 0.25
DRILLED BY Greg Cole
NOTES Ground Water Level @ 1-hour: 0.25'

DEPTH (ft)	SPT	GRAPHIC LOG	MAIN SOIL COMPONENT	OTHER COMPONENTS	BLOW COUNTS (N VALUE)	RECOVERY % (RQD)
0			SAND (SP) Loose to Medium Dense	Gray (Moisture Content = 33.6%).	1-2-4-6 (6)	100
				Gray to dark brown with traces of fine gravel and organics (Moisture Content = 31.5%).	5-5-7-14 (12)	100
				Gray (Moisture Content = 10.3%).	50/3"	10
5			LIMESTONE (LS) Very Dense	No recovery.	50/0"	0
			WEATHERED LIMESTONE (WLS) Loose	Light gray (Moisture Content = 42.3%).	3-2-2-5 (4)	100
10				Bottom of hole at 10.0 feet.		

N-VALUE CURVE

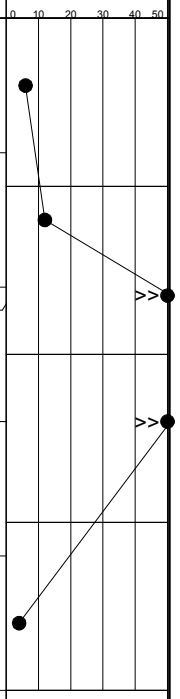

GFA International, Inc
5851 Country Lakes Drive
Fort Myers, Florida 33905
239-489-2443 P
239-489-3438 F

BORING NUMBER B-12

CLIENT Hanson Professional Services, Inc.
PROJECT NAME Runway 14-32 Drainage Improvements
PROJECT NUMBER 14-1623
PROJECT LOCATION 160 Aviation Drive North, Naples
DATE STARTED 7/14/14 **COMPLETED** 7/14/14
GROUND ELEVATION N/A
DRILLING CONTRACTOR GFA International
GROUND WATER LEVEL:
DRILLING METHOD SPT/ MUD ROTARY
▽ **ENCOUNTERED AT (ft):** 0.6
DRILLED BY Greg Cole
NOTES Ground Water Level @ 1-hour: 0.6'

DEPTH (ft)	SPT	GRAPHIC LOG	MAIN SOIL COMPONENT	OTHER COMPONENTS	BLOW COUNTS (N VALUE)	RECOVERY % (RQD)
0			▽ SAND (SP) Very Loose to Medium Dense	Gray (Moisture Content = 24.8%).	1-2-1-4 (3)	100
				Gray (Moisture Content = 42.8%).	2-5-8-9 (13)	100
5				Gray to dark brown (Moisture Content = 42.7%).	3-6-6-5 (12)	100
			SAND WITH SILT (SP-SM) Medium Dense	Brown to gray with traces of fine gravel (Moisture Content = 43.8%).	2-5-7-5 (12)	100
10			SAND (SP) Loose	Gray with weathered limestone (Moisture Content = 33.0%). Rock in tip of spoon.	2-4-2-2 (6)	20
				Bottom of hole at 10.0 feet.		

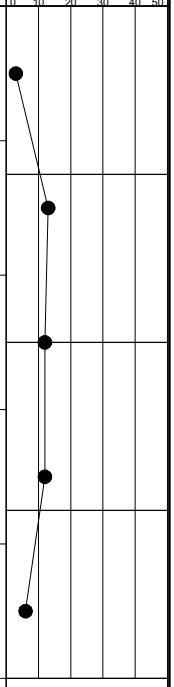

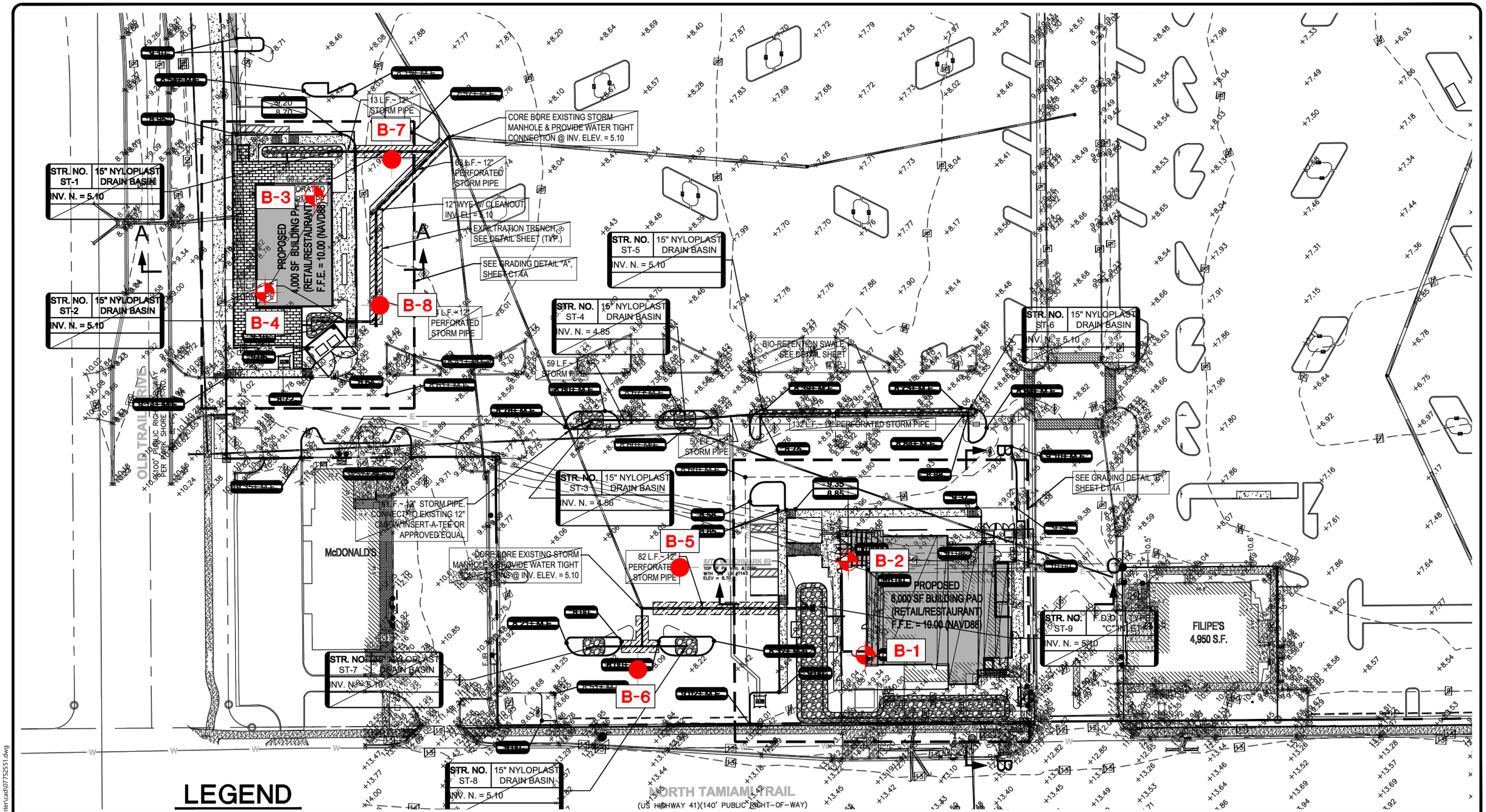

LEGEND

- Approximate SPT boring location
- Approximate Auger boring location

NOTE: Based upon site plan by CPH, Inc. provided to PSI

BORING LOCATION PLAN

0 60'
PLAN SCALE

DRAWN	DJG
CHECKED	MRM
APPROVED	LTL
SCALE	NOTED

GEOTECHNICAL SERVICES
PARK SHORE SHOPPING CENTER
NAPLES, FLORIDA

Intertek psi

DATE	PROJ. NO.	
MAY 17	07752551	SHEET 1

P:\775-Geo\07752551 Park Shore Shopping Center\cad\07752551.dwg

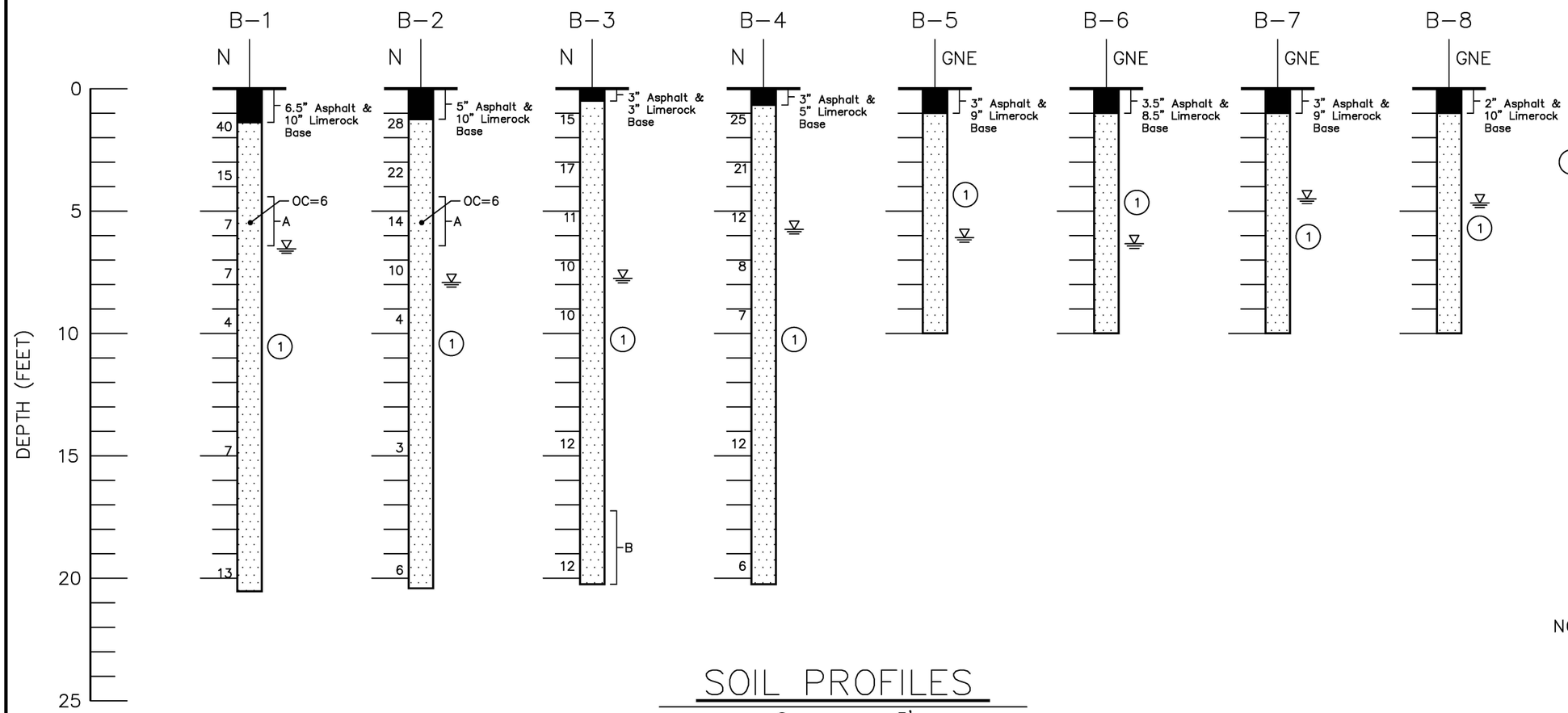

SOIL PROFILES

0 5'

VERTICAL SCALE

LEGEND

(1) Brown/dark brown/gray fine SAND to slightly silty fine SAND (SP/SP-SM)

SP Unified Soil Classification System (ASTM D 2487) group symbol as determined by visual review

Groundwater level, May 2017

GNE Groundwater level not encountered

N SPT N-value in blows/foot

A With organics

B With cemented shells

OC Organic Content (%)

NOTE: Soil borings by Test Lab, Inc.

DRAWN	DJG
CHECKED	MRM
APPROVED	LTL
SCALE	NOTED

GEOTECHNICAL SERVICES

PARK SHORE SHOPPING CENTER

NAPLES, FLORIDA

Intertek psi

DATE	PROJ. NO.	
MAY 17	07752551	SHEET 2

US Army Corps of Engineers®

HYDRAULICS, HYDROLOGY & COASTAL

SUB - APPENDIX

US Army Corps of Engineers®

Norfolk District

Collier County Coastal Storm Risk Management Study

Norfolk, Virginia

HYDRAULICS, HYDROLOGY, & COASTAL SUB-APPENDIX

JULY 2020

PAGE INTENTIONALLY LEFT BLANK

Table of Contents

CHAPTER 1 INTRODUCTION **10**
CHAPTER 2 FEMA SOUTHWEST FLORIDA STORM SURGE STUDY **16**
2.1 STUDY SETUP 17
2.2 DATUMS 18
2.3 DIGITAL ELEVATION MODEL (DEM) DEVELOPMENT 19
2.4 FEMA STORM SELECTION AND STATISTICAL METHOD DEVELOPMENT 22
2.5 COLLIER COUNTY CSRM STORM DATABASE 23
2.6 CONFIDENCE LIMITS AND RISK DISCUSSION 25
2.7 HISTORICAL TIDE GAUGE ANALYSIS VS. NUMERICAL MODELING 36
CHAPTER 3 IMPACTS OF CLIMATE CHANGE **37**
3.1 GUIDANCE 37
3.2 COMPONENTS OF RELATIVE SEA LEVEL RISE 38
3.3 RATES OF RELATIVE SEA LEVEL RISE 38
3.3.1 Historic Rate of Relative Sea Level Rise 38
3.3.2 Intermediate Rate of Relative Sea Level Rise 39
3.3.3 High Rate of Relative Sea Level Rise 40
3.3.4 Determining Local VLM 40
3.4 CALCULATING RELATIVE SEA LEVEL RISE 41
3.4.1 Historic Rate 41
3.4.2 Intermediate Rate 41
3.4.3 High Rate 42
3.5 PROJECTED WATER SURFACE LEVEL INCREASE 42
3.6 IMPACTS OF SEA LEVEL RISE DURING FUTURE YEARS 48
3.7 CLIMATE CHANGE IMPACTS TO HYDROLOGY 51
3.8 ADAPTATION OF THE COMPONENTS OF THE RECOMMENDED PLAN FOR CLIMATE CHANGE 55
CHAPTER 4 WAVE DATA, MODELING, AND RESULTS **57**
4.1 FEMA SWFL STUDY Wave Data 57
CHAPTER 5 WAVE OVERTOPPING ANALYSIS **60**

5.1 DETERMINISTIC VERSUS PROBABLISITIC APPROACH 61
5.2 OVERTOPPING FLOODWALL ANALYSIS 62
5.2.1 ACES Software 62
5.2.2 EurOtop 64
5.2.3 Individual Model Results of Floodwall Overtopping Analysis 65
5.3 OVERTOPPING REVETMENT ANALYSIS 71
5.3.1 ACES Software 71
5.3.2 EurOtop 71
5.3.3 Individual Model Results of Revetment Overtopping Analysis 71
5.4 ALLOWABLE OVERTOPPING RATES 73
CHAPTER 6 WAVE FORCES ON A VERTICAL WALL 77
6.1 CALCULATION OF WAVE FORCES ON A VERTICAL WALL 77
CHAPTER 7 HYDROLOGY AND HYDRAULICS ANALYSIS 82
7.1 HYDROLOGIC PARAMETERS FOR INTERIOR ANALYSIS 84
5.3.4 WIGGINS PASS 85
5.3.5 DOCTORS PASS 86
5.3.6 TAMIAMI TRAIL 87
7.2 PUMP STATION LOCATIONS 88
7.3 INTERIOR DRAINAGE OVERVIEW 90
7.4 HEC-RAS RESULTS 91
CHAPTER 8 STORM SURGE BARRIER CLOSURE ANALYSIS 99
CHAPTER 9 ADJUSTMENTS DURING PRECONSTRUCTION ENGINEERING AND DESIGN (PED) 108
9.1 HYDRODYNAMIC MODELING OF STRUCTURAL MEASURES 108
9.2 INTERIOR DRAINAGE 109
CHAPTER 10 REFERENCES 110
ATTACHMENTS 113
ATTACHMENT HH&C-1: WAVE OVERTOPPING RATES: ACES OUTPUTS & EUROTOP SPREADSHEETS 113
ATTACHMENT HH&C-2: HAND CALCULATIONS OF WAVE FORCES ON A VERTICAL WALL 113

ATTACHMENT HH&C-3: FEMA SWFL STORM PARAMETERS 113

LIST OF FIGURES

Figure 1.1 Image of Collier County's location (in red) along the coast of Florida 10

Figure 1.2. Project areas near cities of Naples and Marco Island..... 11

Figure 1.3. Collier North County Beach locations 12

Figure 2.1 Image of FEMA SWFL Study area (FEMA, 2014) 16

Figure 2.2 Datums for Naples Pier Tide Gauge (8725110) relative to MSL..... 19

Figure 2.3 Collier County ADCIRC subgrid 22

Figure 2.4 FEMA SWFL Study model save points for Collier County..... 24

Figure 2.5 Locations of Stage-Frequency Curve save points in Figure 2.6 to Figure 2.17 26

Figure 2.6 Stage-Frequency Curve for Save Point 1 (confidence limits shown)..... 27

Figure 2.7 Stage-Frequency Curve for Save Point 20 (confidence limits shown)..... 27

Figure 2.8 Stage-Frequency Curve for Save Point 30 (confidence limits shown)..... 28

Figure 2.9 Stage-Frequency Curve for Save Point 44 (confidence limits shown)..... 28

Figure 2.10 Stage-Frequency Curve for Save Point 66 (confidence limits shown)..... 29

Figure 2.11 Stage-Frequency Curve for Save Point 68 (confidence limits shown)..... 29

Figure 2.12 Stage-Frequency Curve for Save Point 104 (confidence limits shown)..... 30

Figure 2.13 Stage-Frequency Curve for Save Point 108 (confidence limits shown)..... 30

Figure 2.14 Stage-Frequency Curve for Save Point 143 (confidence limits shown)..... 31

Figure 2.15 Stage-Frequency Curve for Save Point 169 (confidence limits shown)..... 31

Figure 2.16 Stage-Frequency Curve for Save Point 192 (confidence limits shown)..... 32

Figure 2.17 Stage-Frequency Curve for Save Point 209 (confidence limits shown)..... 32

Figure 2.18 Image modified from EC 1110-2-6066. 36

Figure 3.1 Relative Sea Level Trend at Naples, Florida (NOAA Station # 8725110). Site accessed December 2019. 39

Figure 3.2 Modified NRC curves for predicting future rates of RSLR. 40

Figure 3.3 Illustrations and simple explanation of future sea level rise and subsidence. 42

Figure 3.4 Historical Sea Level Rise with USACE SLC Scenarios for Naples, FL (8725110) ... 44

Figure 3.5. (A) Collier County Save Point and R-Monument Locations (B) Collier County Beach Reaches 46

Figure 3.6 Projected Water Level increase from 2018 to 2079 47

Figure 3.7 TR reference map. 52

Figure 3.8 Summary matrix of observed and projected climate trends from CWTS-2015-03..... 53

Figure 3.9 Precipitation Trend for Naples. 54

Figure 3.10 Temperature Trend for Naples. 54

Figure 5.1 Locations of proposed structures for overtopping analysis..... 60

Figure 5.2. Image Representing Wave Overtopping of a Vertical Wall..... 62

Figure 5.3 ACES interface. 63

Figure 5.4 Equations used in the EurOtop method. 64

Figure 5.5 Image of Wave Overtopping of a Revetment..... 71

Figure 6.1 Trapezoidal Shape for Pressure Distribution and Definition sketch for Goda formula for wave induced pressure under wave crest on a vertical wall..... 77

Figure 7.1 Potential spot for pump station at Wiggins Pass 89

Figure 7.2 Potential Spot for a pump station on the Gordon River 90

Figure 7.3 HEC-RAS Results-Wiggins Pass 92

Figure 7.4 HEC-RAS Results for Clam Pass..... 93

Figure 7.5 HEC-RAS Results- Doctor's Pass..... 94

Figure 7.6 HEC-RAS Results Tamiami Trail 95

Figure 7.7 Demonstrating the effects of dunes at Wiggins Pass..... 97

Figure 7.8 Demonstrating the effects of dunes at Doctors Pass 98

Figure 8.1 Collier County North County Representative Storm SWL hydrographs. 100

Figure 8.2 Bird's Eye View of the New Bedford – Fairhaven Barrier (Google Earth Image)... 102

Figure 8.3 Aerial View of Stamford Hurricane Protection Barrier (Courtesy of USACE –New England District). 103

Figure 8.4 Image of Fox Point Barrier (Image courtesy of Wikipedia)..... 104

Figure 8.5 Thames Barrier (image courtesy of Wikipedia). 106

LIST OF TABLES

Table 1.1 Historical Storm Events. 13

Table 2.1 Vertical Accuracy of FEMA SWFL Study DEM LiDAR Datasets (FEMA, 2015)..... 20

Table 2.2 Overview of Bathymetric Data Sets Used and Ranking..... 21

Table 3.1 Increase in predicted water surface elevations at Naples Pier – Naples, FL under the low, intermediate and high rates of future RSLR USACE Curves computed using criteria in USACE ER 1100-2-8162 (in feet). 43

Table 3.2 Water Levels (in feet) for selected Collier County Save Points at 2018, 2030, and 2079 48

Table 3.3 Water Levels (in feet) for Collier County Beach Reaches at 2018 and 2079..... 48

Table 3.4 Additional Increase in SLR predicted 20 years, 50 years, and 100 years into the future (in feet) from project start year of 2030 to 2129..... 49

Table 3.5 Water Levels (in feet) w/ RSLR at 2125 for Collier County Save Points 50

Table 3.6 Water Levels (in feet) w/ RSLR at 2125 for Collier County Beach Reaches 51

Table 4.1 Wave heights and periods for Collier County Save Points..... 58

Table 4.2 Wave heights and periods for Collier County Beach Reaches 59

Table 5.1 Overtopping Analysis of Gate and Floodwall for Bonita Beach Rd (in feet)..... 66

Table 5.2 Overtopping Analysis of Gate and Floodwall for Bonita Beach Rd (in meters)..... 66

Table 5.3 Overtopping Analysis of Barrier and Floodwall for Wiggins Pass (in feet). 67

Table 5.4 Overtopping Analysis of Barrier and Floodwall for Wiggins Pass (in meters)..... 67

Table 5.5 Overtopping Analysis of Gate and Floodwall for Seagate Dr (in feet). 68

Table 5.6 Overtopping Analysis of Gate and Floodwall for Seagate Dr (in meters)..... 68

Table 5.7 Overtopping Analysis of Barrier and Floodwall for Doctors Pass (in feet). 69

Table 5.8 Overtopping Analysis of Barrier and Floodwall for Doctors Pass (in meters)..... 69

Table 5.9 Overtopping Analysis of Gate and Floodwall for Tamiami Trail(in feet)..... 70

Table 5.10 Overtopping Analysis of Gate and Floodwall for Tamiami Trail (in meters)..... 70

Table 5.11 Overtopping Analysis of Marco Island Revetment (in feet)..... 72

Table 5.12 Overtopping Analysis of Marco Island Revetment (in meters)..... 73

Table 5.13 Allowable Overtopping Rates for ACES values (taken from CEM table VI-5-6)..... 75

Table 5.14 Allowable Overtopping Rates for EurOtop values (EurOtop Manual Table 3.5). 76

Table 6.1 Wave Forces calculated for different wall heights for 10% (10YR), 5% flood (20 yr.), 2% flood (50 yr.), and 1% flood (100 yr.). 80

Table 6.2 Wave Forces calculated for set wall heights (10 FT, 12 FT, and 14 FT NAVD88)..... 81

Table 7.1 Historical Storm Events 83

Table 7.2 HMS Results for Wiggins Pass Reservoir with a 24-hour Closure 85

Table 7.3 Doctors Pass..... 86

Table 7.4 Tamiami Trail 87

Table 8.1 New England Storm Surge Barriers Closure record. 105

Table 8.2 Thames Surge Barrier Closure Frequency. 107

CHAPTER 1 INTRODUCTION

This report presents the results of the Hydraulics, Hydrology and Coastal (HH&C) engineering evaluation and analysis for the Collier County Coastal Storm Risk Management (CSRM) Study 10% engineering design. Collier County is located on the southwest coast of Florida, about 120 miles south of the entrance to Tampa Bay and about 100 miles north of Key West (Figure 1.1).

Figure 1.1 Image of Collier County's location (in red) along the coast of Florida

Figure 1.2 shows the currently proposed project areas near the cities of Naples and Marco Island. The Naples project area (also referred to as the North County project area) consists of Vanderbilt, Park Shore, and Naples Beaches along with adjacent inland bay areas. It extends roughly 17 miles from the northern county line (approximately Bonita Beach Road extended) south to Gordon Pass. Collier County currently maintains nourishment projects at Vanderbilt Beach from Florida Department of Environmental Protection (DEP) range monument R22-R30; at Park Shore Beach from R42-54; and Naples Beach from R58A-R79. Other key features of the North County project area are the Barefoot Beach County Preserve (R9-R16), Wiggins Pass State Park (R17-R22), and Naples Pier (R74.5). The Marco Island project area extends from the southern tip of a natural spit that is approximately adjacent to the northern terminus of Seaview Ct. (R135), south down the shoreline to the point that bounds the western end of Caxambas Pass. The approximate shoreline length of this project area is three miles.

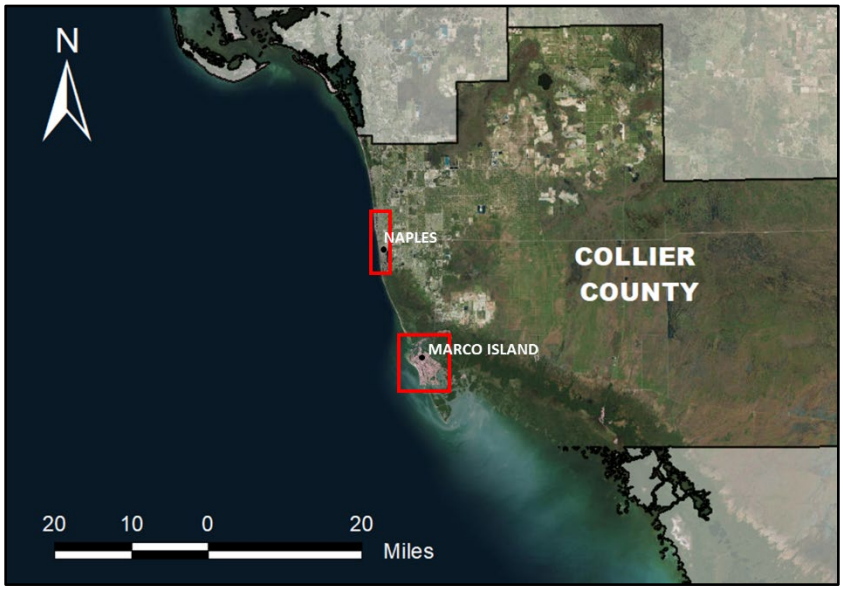

Figure 1.2. Project areas near cities of Naples and Marco Island

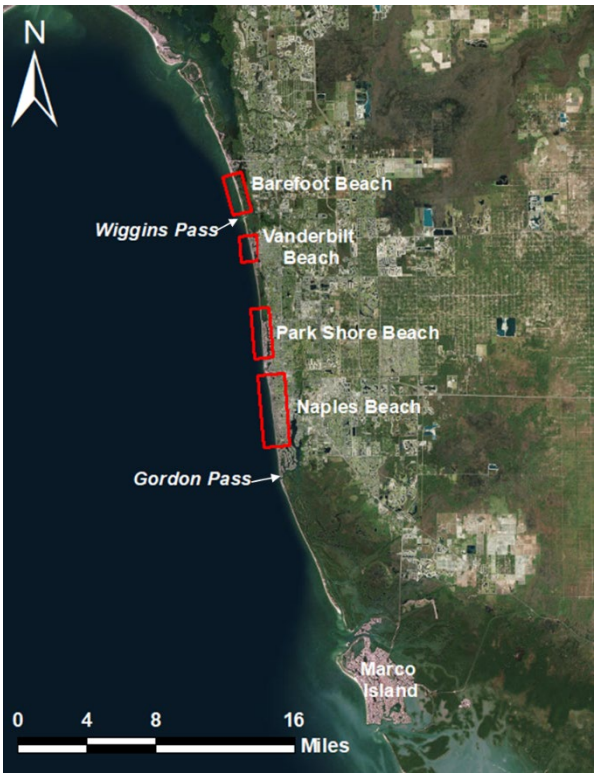

Figure 1.3. Collier North County Beach locations

Collier County has experienced flooding from two types of storms: tropical storms and hurricanes. "Superstorms" also have the potential to impact the area as seen with the "Storm of the Century" in 1993. Table 1.1 displays: (1) the date of historical storm events (2) the type of storm, (3) the peak water surface elevations in North Atlantic Vertical Datum (NAVD 88), and (4) the total rainfall from the event. For storms occurring since 1965, the peak water surface elevations shown were measured by the NOAA – Naples tide gage (NOAA Station 8725110) while older storm water surface elevation were gathered from previous reports and studies if available. The rainfall values shown where obtained from measurement at the Naples Airport where available and historical data available from NOAA's Weather Prediction Center.

Table 1.1 Historical Storm Events.

	Storm Event – Date & Name	Type of Storm	Peak Water Surface Elevations NAVD 88 (in feet)	Rainfall (in inches) *Measured from Naples Airport
1	October 7, 1873	Hurricane	7.5 – 10.5	-
2	September 25, 1894	Hurricane	9.5 – 10.5	-
3	September 1926 (Great Miami Hurricane)	Hurricane	4.7	5
4	August/September 1935 (Great Labor Day Hurricane)	Hurricane	N/A	10
5	October 1944 (No Name)	Hurricane	6	5
6	August/September 1960 (Donna)	Hurricane	10.3	3 - 5
7	October 1964 (Isbell)	Hurricane	N/A	1 - 3
8	August/September 1965 (Betsy)	Hurricane	1.93	1
9	August 1981 (Dennis)	Hurricane	1.54	1 - 3
10	July 1985 (Bob)	Hurricane	1.78	10 - 15
11	August 1992 (Andrew)	Hurricane	1.24	1 - 3
12	March 1993 ("Storm of the Century")	Superstorm	3.33	1 - 3
13	November 1994 (Gordon)	Hurricane	1.43	3
14	October/November 1998 (Mitch)	Hurricane	1.48	1.42*
15	September 1992 (Harvey)	Tropical Storm	2.22	10.25*
16	August 2004 (Charley)	Hurricane	No gauge data available	7.48*
17	October 2005 (Wilma)	Hurricane	2.47	6.63*

	Storm Event – Date & Name	Type of Storm	Peak Water Surface Elevations NAVD 88 (in feet)	Rainfall (in inches) *Measured from Naples Airport
18	June 2012 (Debby)	Tropical Storm	2.17	1.6*
19	August 2012 (Issac)	Tropical Storm	2.62	1.98*
20	August/September 2017 (Irma)	Hurricane	4.6	11.46*

Chapter 3, Section 3.5 in the Main Engineering Appendix and Chapter 1 in the Main Report, also discussed the historical storm events, water levels, and flooding that has impacted the Collier County.

This report will discuss in detail all the existing information that was reviewed and how that information was used in the HH&C engineering evaluation and analysis to come up with the contribution of the elements to get to the tentative selected plan and optimally the preferred plan for the study. The report will also provide recommendations for the next phase (Pre-Construction, Engineering and Design (PED) Phase) of the Collier County CSRM study.

CHAPTER 2 FEMA SOUTHWEST FLORIDA STORM SURGE STUDY

For the Collier County CSRM, the Norfolk District used Federal Emergency Management Agency (FEMA) Region IV Southwest Florida Storm Surge Study (SWFL Study) stillwater elevations for the project analysis and design. The FEMA SWFL Study includes the coastal counties of Sarasota, Charlotte, Lee, and Collier and the inland counties of DeSoto and Hendry. The purpose of the study is to determine the flood risk for these coastal areas for production of revised Flood Insurance Rate Maps (FIRMs). See Figure 2.1 for an image that depicts the SWFL study area.

Figure 2.1 Image of FEMA SWFL Study area (FEMA, 2014)

The FEMA SWFL study incorporated existing and future forcing and potential future climate change to perform statistical analyses and numerical hydrodynamic modeling for the region. The hydrodynamic modeling output data from the FEMA SWFL Study was provided to the Norfolk PDT and the data was processed to produce statistical stillwater level elevations, statistical wave heights and periods, and storm hydrographs. The statistical analyses resulted in stillwater level elevations and wave heights as average recurrence intervals (ARI) for a 50% flood (2 year flood), 20% flood (5 year flood), 10% flood (10 year flood), 5% flood (20 year flood), 2% flood (50 year flood), 1% flood (100 year flood), 0.50% flood (200 year flood), 0.20% flood (500 year flood), 0.10% flood (1,000 year flood), for different confidence limits.

2.1 STUDY SETUP

The numerical modeling study was performed using the two-dimensional hydrodynamic model ADCIRC and the two-dimensional spectral wave model SWAN. The ADCIRC model is a coastal circulation and storm surge model that uses the finite element method to solve the reformulated, depth-averaged shallow water equations. The model is run on a triangulated mesh with elevations derived from a seamless bathymetric/topographic DEM that includes both offshore and overland areas. The triangulated format of the mesh allows variation in the element size, so the study area can have a high concentration of nodes while fewer nodes (with higher element areas) can be placed farther away to make the mesh size more efficient without compromising accuracy (FEMA 2015). The SWAN model runs on the same triangulated mesh that is used with the ADCIRC model. During the model simulations, the water levels from ADCIRC are fed into the SWAN model at 15-minute interval (of model time). The SWAN model computes the wind-driven development of the storm wants, the propagation of the waves over the model domain, and the wave radiation stress gradients where the waves break close to the shore. In turn, the ADCIRC component is informed of the computed radiation stress gradients at the completion of each SWAN component time step. This information is used by the ADCIRC component to adjust the nearshore water levels for the wave-driven setdown and setup in the zone of breaking waves near the shoreline. This process continues for the duration of the wind and pressure forcing from the meteorological input files. The model was validated with historic tide gage, high water mark, and wave buoy data.

The Southwest Florida Storm Surge is documented in five Intermediate Data submittal (IDS) reports:

- IDS 1 is a detailed overview of the FEMA storm surge study, including background on the study area, field reconnaissance, modeling mesh development, storm climatology, and the selection of the storm surge validation storms used to validate the model (FEMA, 2015).

- IDS 2 describes the results of the tide and storm surge validation, mesh adjustments, development of the optimized set of synthetic hurricanes that fully represent the range of hurricane storm surge forcing that can occur in the project area based on an analysis of past events (the Joint Probability Modeling-Optimum Sampling [JPM-OS] storm set) (FEMA 2017).
- IDS 3 describe the development of computed maximum storm surge elevations for the series of synthetic hurricanes defines by the JPM-OS set (FEMA 2018).
- IDS 4 will describe the nearshore hydraulics, including applicable overland wave height, erosion, runup, and overtopping analysis
- IDS 5 will include the draft work maps and information on the development of the study's product.

As this study is still ongoing and some files may not be shared until a formal review and appeals process has taken place, release was granted for the following files:

- Meshes
- Fort.13
- IDS Reports
- Validation Storm run files
- Production run Max Elevation files
- Production run sample fort.15/26 file

The unsorted modeling data was sent to ERDC for processing and statistical analysis.

2.2 DATUMS

The native datum of the FEMA SWFL study results was based on local mean sea level (MSL) tidal epoch 1983-2001. This was the datum that was used to define the regional hydrodynamic model (ADCIRC), from which storm surge results were obtained. Subsequently, all the data was converted from vertical datum Mean Sea Level (MSL) in meters to North American Vertical Datum 1988 (NAVD88) in feet, through conversion values provided by the tide gauge located on the Naples Pier. Figure 2.2 displays the tidal datum conversions for the project area in feet relative to MSL. Unless otherwise noted, all stillwater elevations stated in this report are referenced to the North American Vertical Datum 1988 (NAVD 88).

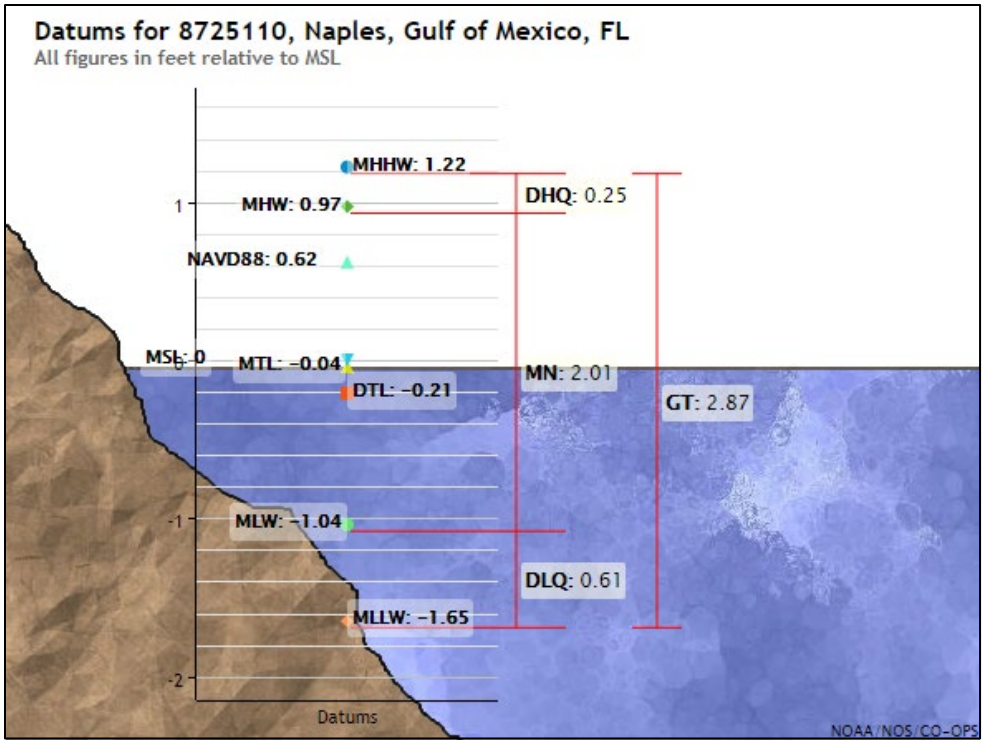

Figure 2.2 Datums for Naples Pier Tide Gauge (8725110) relative to MSL

2.3 DIGITAL ELEVATION MODEL (DEM) DEVELOPMENT

The topographic and bathymetric data were acquired from a variety of sources and assembled into the SWFL Study's digital elevation model (DEM). The topographic dataset comprises three LiDAR sources: a 2004 LiDAR project collected by the Southwest Florida Water Management District, a 2007 LiDAR project collected by the Florida Division of Emergency Management, and a 2011 LiDAR project collect by the United States Geological Survey. All the topographic datasets met the 2-foot contour interval criteria as specified by the U.S. National Map Accuracy Standards (FEMA, 2015). The vertical accuracy for each of the projects is shown in Table 2.1.

Table 2.1 Vertical Accuracy of FEMA SWFL Study DEM LiDAR Datasets (FEMA, 2015)

LiDAR Project	FVA ($RMSE_Z$ * 1.96)	CVA ($RMSE_Z$ * 1.96)
2011 ARRA LiDAR	0.09 feet	0.42 feet
2007 FDEM	0.43 feet	0.63 feet
2004 SWFWMD Sarasota County[1]	N/A	1.16 feet

[1] The accuracy reported was not specified as FVA or CVA.
LiDAR = light detection and ranging
FVA = fundamental vertical accuracy
$RMSE_Z$ = root mean square error on the vertical points
CVA = consolidated vertical accuracy
ARRA = American Recovery and Reinvestment Act
FDEM = Florida Division of Emergency Management
SWFWMD = Southwest Florida Water Management District
N/A = Not applicable

Bathymetric data sources were acquired from the National Oceanic and Atmospheric Administration (NOAA) National Geophysical Data Center online database of hydrographic survey projects and U.S. Army Corps of Engineers (USACE) Hydrographic Channel Survey Data. The horizontal projections of the bathymetric survey data sources are in the North American Datum of 1983 (NAD83) decimal degrees. The vertical datums are either Mean Lower Low Water (MLLW) or Mean Low Water (MLW). Bathymetric data from a 2010 USACE Joint Airborne LiDAR Bathymetry Technical Center of Expertise (JALBTCX) survey conducted along the west coast of Florida. Only the bathymetry from this data set was used as it was determined that the topographic data was not fully cleaned of non-bare earth artifacts (i.e. trees, houses, etc.) The vertical units of the JALBTCX data set are in feet referenced to the North American Vertical Datum of 1988 (NAVD88) (FEMA, 2015). The three sources of bathymetric surveys were collect over multiple decades, by different agencies, for different purposes, and there are many locations where the datasets overlap. The FEMA SWFL Study team developed a ranking system, with the oldest dataset having the lowest ranking and the newest dataset ranking the highest. In areas were the datasets overlapped, the dataset with the lowest ranking in the overlapping area was removed (FEMA, 2015). Table 2.2 shows a listing of each bathymetric data source and its ranking. All the bathymetric data sources were converted to NAVD88 using NOAA's VDatum tool.

Table 2.2 Overview of Bathymetric Data Sets Used and Ranking

Dataset	Year Collected	Vertical Datum	Rank
USACE JALBTCX LiDAR	2010	NAVD88	1
USACE GIWW* CR to AR Charlotte County	2008	MLLW	2
USACE GIWW* Lee County	2008	MLLW	3
USACE Venice Inlet (Caseys Pass & IWW)	2008	MLLW	4
USACE Charlotte Harbor, Boca Grande Pass	2013	MLLW	5
USACE Fort Myers Beach Harbor	2013	MLLW	6
USACE Longboat Pass	2013	MLLW	7
NOS Surveys	Variable, but all prior to 1971	MLW	8

NOS: National Ocean Service
MLW: Mean Low Water
MLLW: Mean Lower Low Water

The final combined topographic and bathymetric surface was exported to a DEM with a cell resolution of 15 feet for interpolation to the ADCIRC mesh.

An interpolated subgrid of Collier County clipped from the SWFL Study ADCIRC mesh is shown in Figure 2.3.

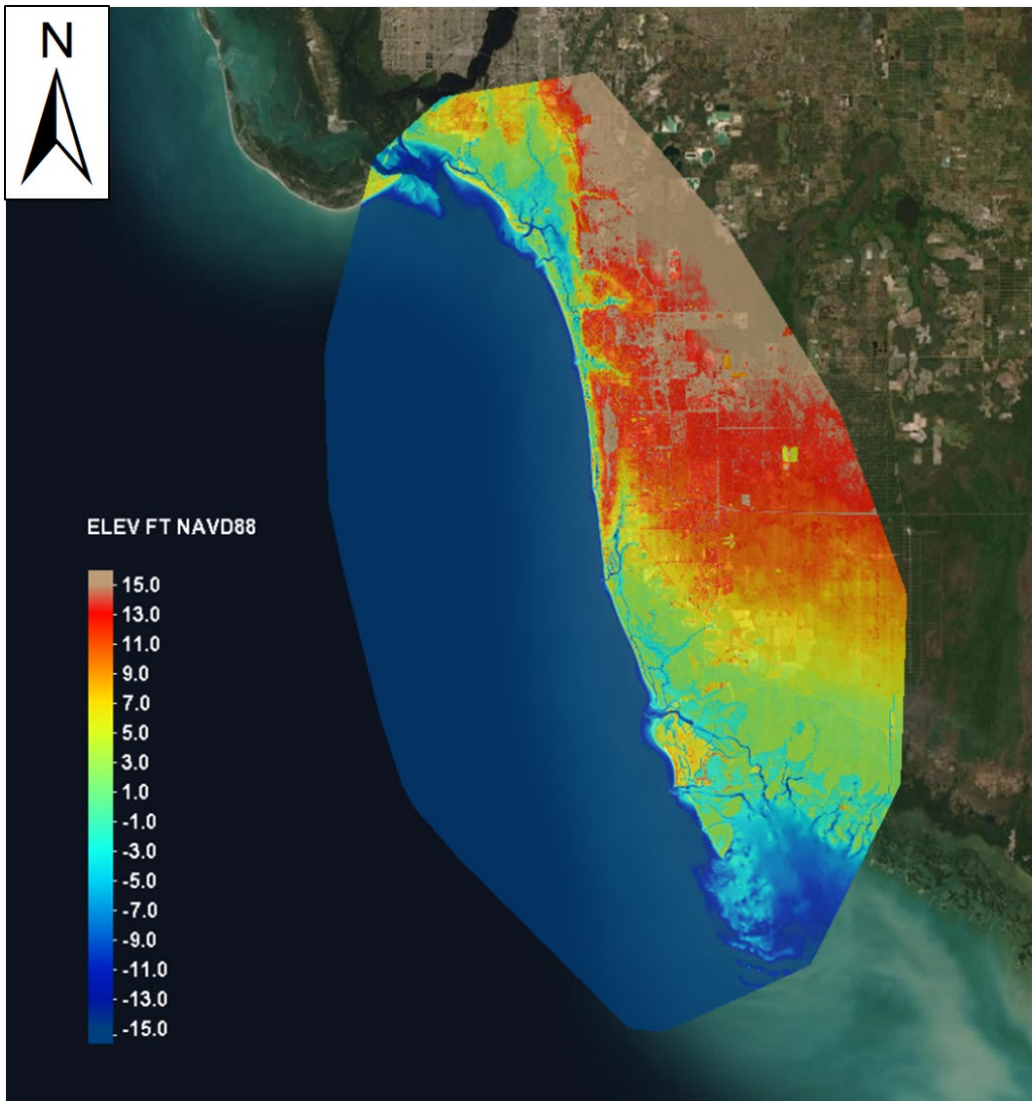

Figure 2.3 Collier County ADCIRC subgrid

2.4 FEMA STORM SELECTION AND STATISTICAL METHOD DEVELOPMENT

Within the FEMA SWFL project area, major events that contribute to the 10YR, 50YR, 100YR, 200 YR, 500YR, and 1000YR average recurrence intervals are rare and the spacing of tide gauges is large compared to the characteristic scale of differenced in maximum hurricane storm surge levels, the available tide is not sufficient to determine these flood levels throughout the project area. Instead, numerical modeling of the storms and their resulting surge heights are relied upon to represent the maximum coastal flood elevations at points across the FEMA SWFL

project area. For more frequent events, 2YR and 5YR events, the tide gauge data is sufficient to develop the Stillwater elevations as the gauge record lengths are much longer than the return periods themselves.

To develop the FEMA SWFL storms, data from historical storms was used to develop a statistical description of the hurricane storm climate of the area in terms of parameters such as central pressure deficit, radius to maximum winds, forward speed of the storm, azimuth of the storm track, etc., allowing for the probabilistic characterization of the occurrence and characteristics of potential hurricanes that may cause significant flooding along the SWFL coast. Extra-Tropical storms were not included in the FEMA SWFL Study because previous FEMA studies in Florida provided evidence that they do not contribute to 10YR, 50YR, 100YR, 200 YR, 500YR, and 1000YR storm surge heights.

The FEMA SWFL Study followed the Joint-Probability Method (JPM) as described by Resio (2007) and Toro et al (2010a) and incorporated experience from past FEMA flood studies along the Florida Gulf Coast make appropriate data and model modifications to capture the conditions in Southwest Florida. The JPM method considers all possible combinations of storm characteristics as landfall, with their associated probabilities, calculates the surge effects for each combination, and then combines these results to obtain the annual probability of exceeding any storm surge elevation of interest. This calculation is represented as a multi-dimensional integral (the JPM integral). The SWFL Study used an approach referred to as the JPM-OS, where the OS refers to "optimum sampling", based on a procedure that approximates the multi-dimensional JPM integral by means of a weighted sum over a manageable number of discrete probability masses (Toro et al. 2010b). Each of these masses may be interpreted as the characteristics of a representative synthetic storm at landfall. These characteristics, together with some simple deterministic rules, are used to specify the entire storm history, which is then used as the as input to the numerical wind, wave, and surge models. The JPM-OS approach developed a representative set of 395 synthetic storms and their associated annual recurrence rates. These storms and their rates provide a condensed representation of the population of possible future synthetic storms used to calculate surge inundation probabilities.

2.5 COLLIER COUNTY CSRM STORM DATABASE

A numerical hydrodynamic model (ADCIRC), forced by the synthetic storms, is used to translate the probabilistic model of storm conditions to the corresponding probabilistic definition of annual exceedance probabilities for coastal floods. FEMA provided the raw, unsorted modeling data for processing. While the documentation for the FEMA SWFL study stated 395 storms were run for the production runs, the modeling data provided to ERDC included the responses for 373 storms. Additionally, some of these files were corrupted. Ultimately ERDC processed the data for 357 storms. The statistical analysis performed by ERDC produced

maximum Still Water Level (SWL) AEP curves and maximum wave AEP curves (heights and periods). SWL by USACE definition has 3 main components: mean sea level, astronomical tide, and storm surge. Also, as part of the hydrodynamic modeling, wave set-up is also included (SWL + wave set-up is sometimes called Dynamic SWL, or DSWL). A table with the FEMA SWFL storm parameters is included in this report as Attachment HH&C-3.

ERDC produced statistics and times series results for 229 "save points" around Collier County (Figure 2.4). ERDC's methodology to calculate the AEPs is the same joint probability analysis performed for FEMA, but how the final results are presented differ. For example, for FEMA only one hazard curve is produced for each point, whereas for the USACE, a family of five (5) curves is generated to characterizes and convey the uncertainty; this is a mean curve and 4 non-exceedance confidence limits, 10%, 16%, 84%, and 90% for the Collier County storm statistics. In addition to the statistics, water level and wave time series were also produced at each save point. Save points near proposed structural measures were reviewed and analyzed for all engineering evaluation purposes.

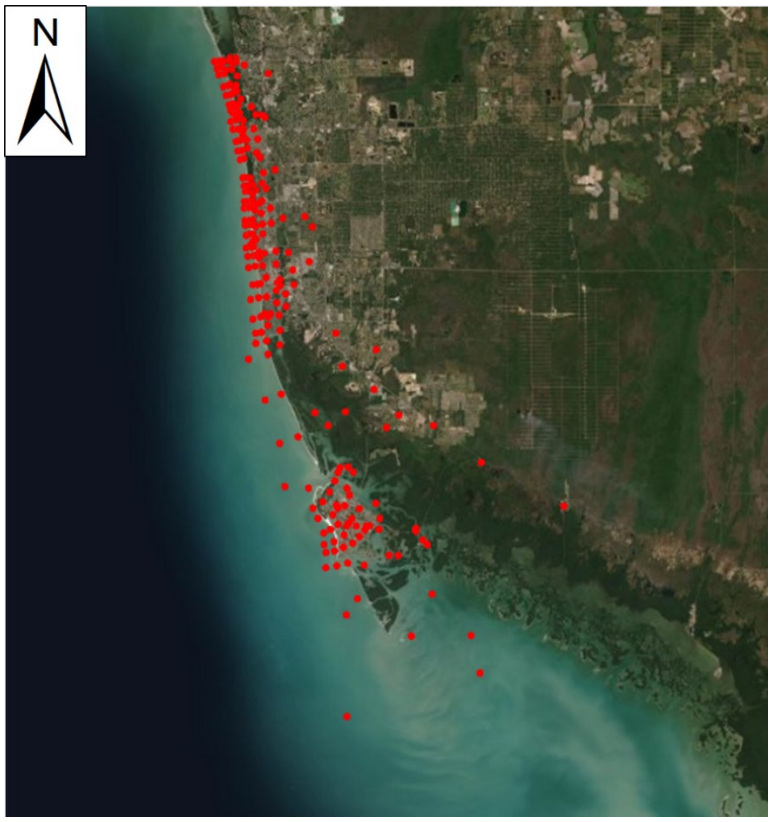

Figure 2.4 FEMA SWFL Study model save points for Collier County

As previously stated, the native datum of the FEMA SWFL Study is based on the local MSL tidal epoch of 1983-2001. Therefore, the actual increase in the relative local sea level rise (based on the USACE low scenario at the Naples Pier NOAA gage) from 1992 to 2018 (the start of the study), which was 0.24 feet, was added to bring the water levels to present date after data was converted to NAVD 88 (in feet).

2.6 CONFIDENCE LIMITS AND RISK DISCUSSION

As previously stated, the ERDC results produced water levels, wave heights, wave period, etc., for different storm frequencies and confidence limits. Figure 2.6 to Figure 2.17 displays Stage-Frequency Curves from the ERDC results at selected save points throughout Collier County for the mean (50%), 10%, 16%, 84%, and 90% confidence limits for water levels. Note that all water levels displayed in the figures are projected SWLs for the year 2018. Figure 2.5 displays the locations of these save points.

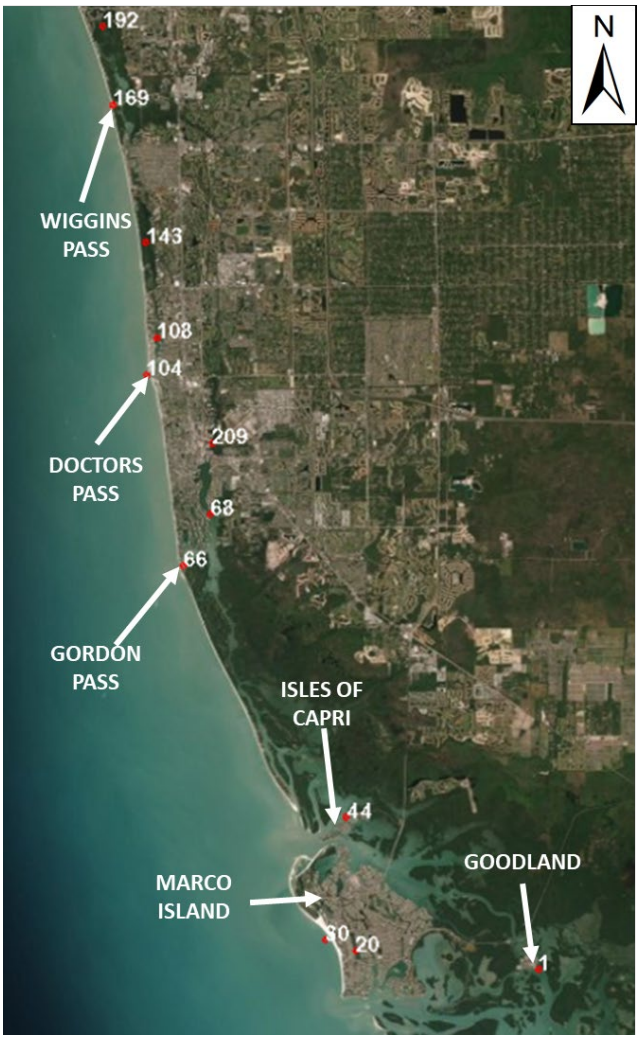

Figure 2.5 Locations of Stage-Frequency Curve save points in Figure 2.6 to Figure 2.17

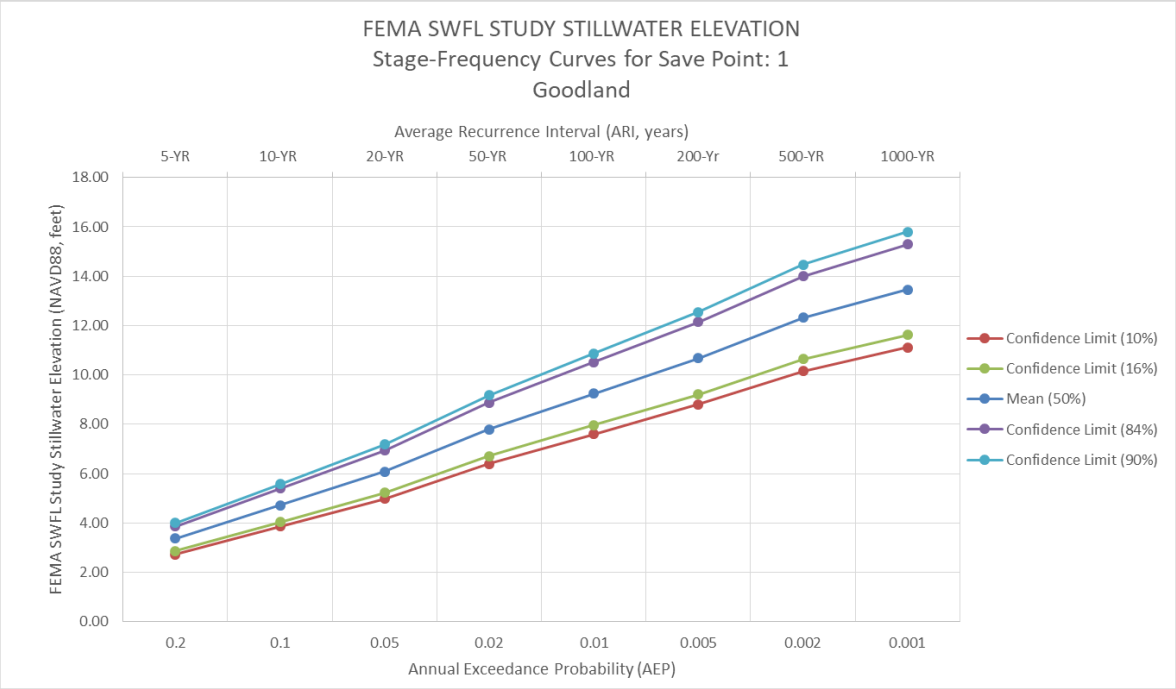

Figure 2.6 Stage-Frequency Curve for Save Point 1 (confidence limits shown).

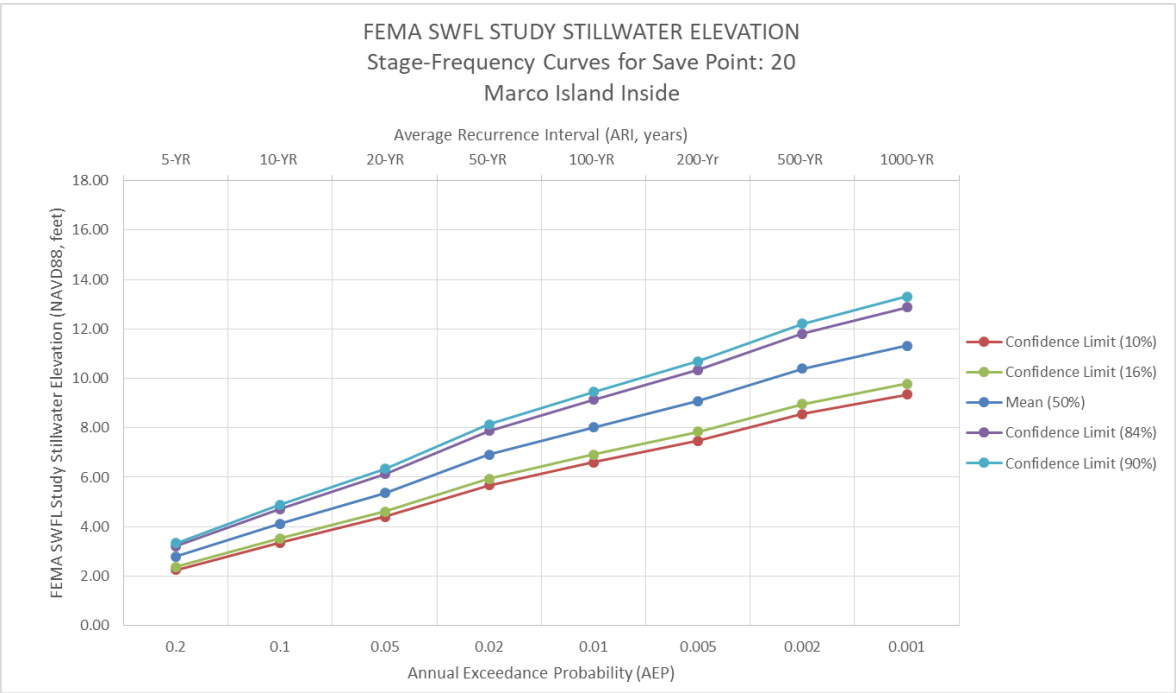

Figure 2.7 Stage-Frequency Curve for Save Point 20 (confidence limits shown).

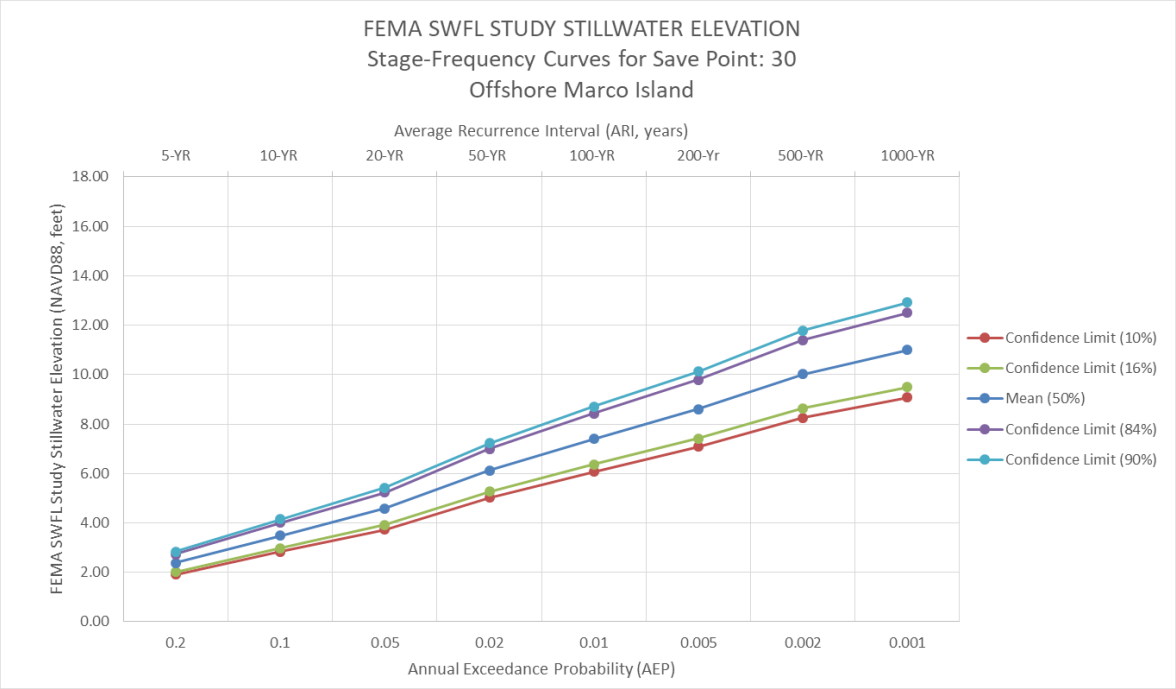

Figure 2.8 Stage-Frequency Curve for Save Point 30 (confidence limits shown).

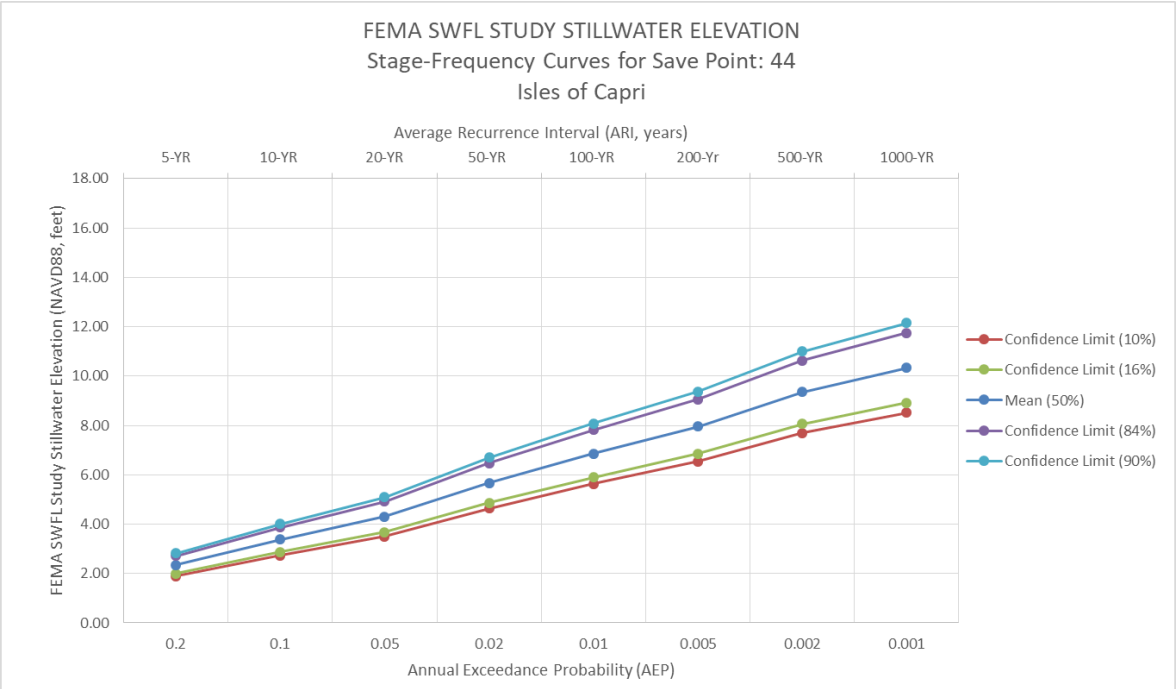

Figure 2.9 Stage-Frequency Curve for Save Point 44 (confidence limits shown).

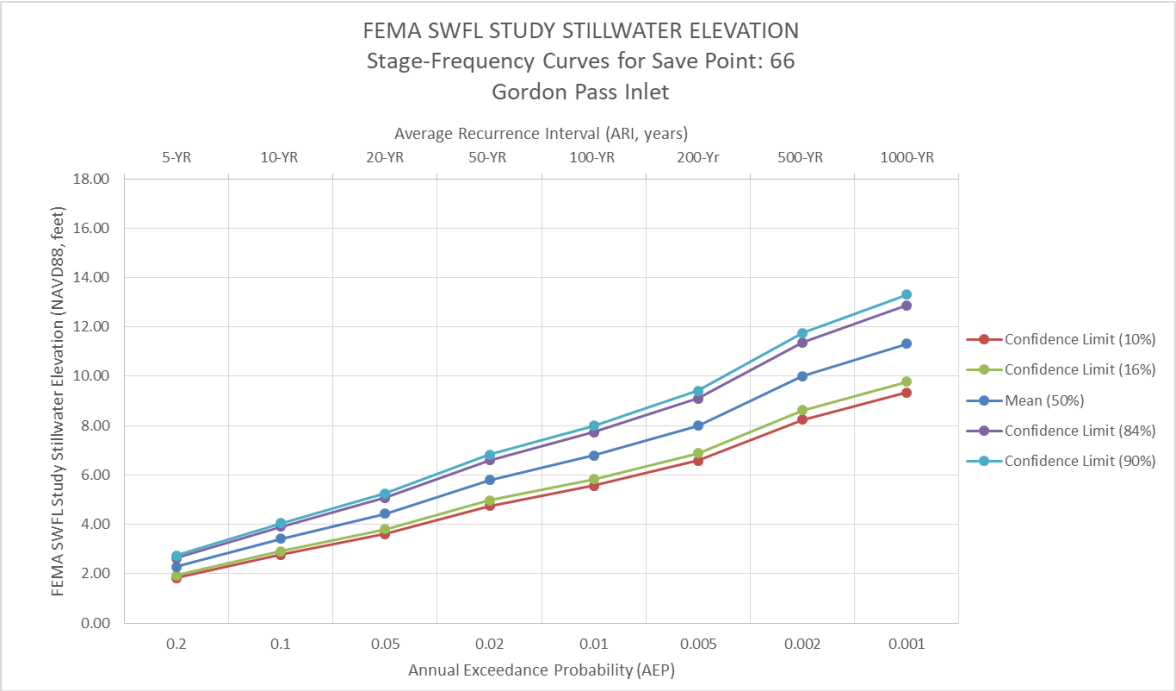

Figure 2.10 Stage-Frequency Curve for Save Point 66 (confidence limits shown).

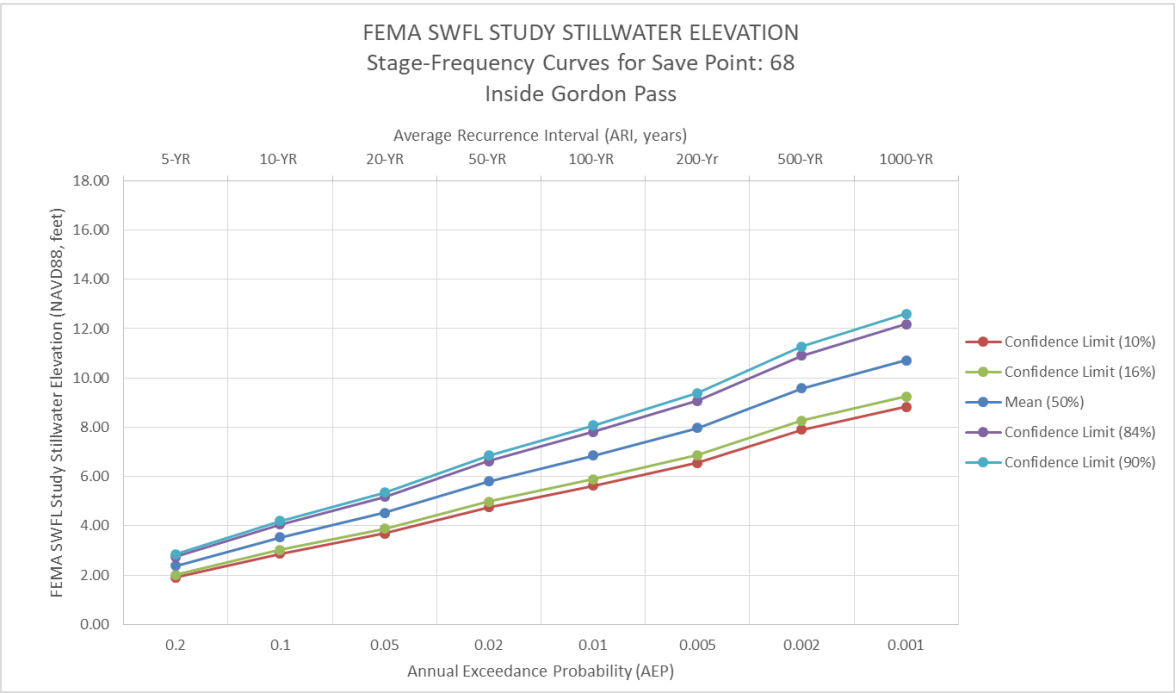

Figure 2.11 Stage-Frequency Curve for Save Point 68 (confidence limits shown).

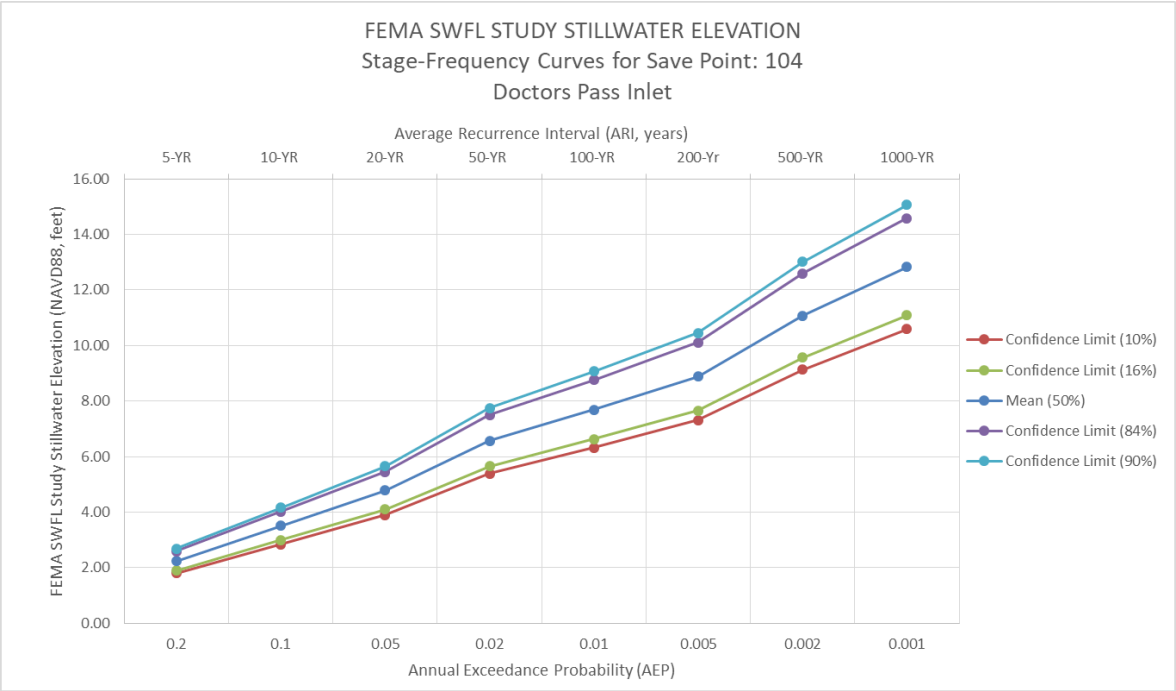

Figure 2.12 Stage-Frequency Curve for Save Point 104 (confidence limits shown).

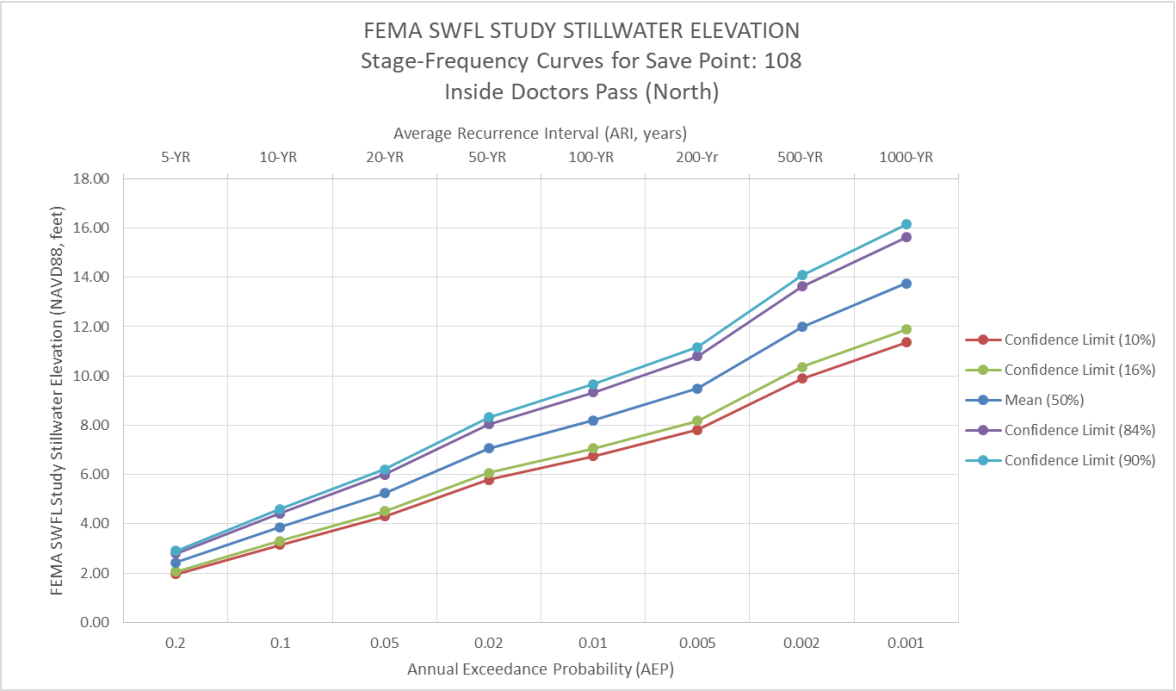

Figure 2.13 Stage-Frequency Curve for Save Point 108 (confidence limits shown).

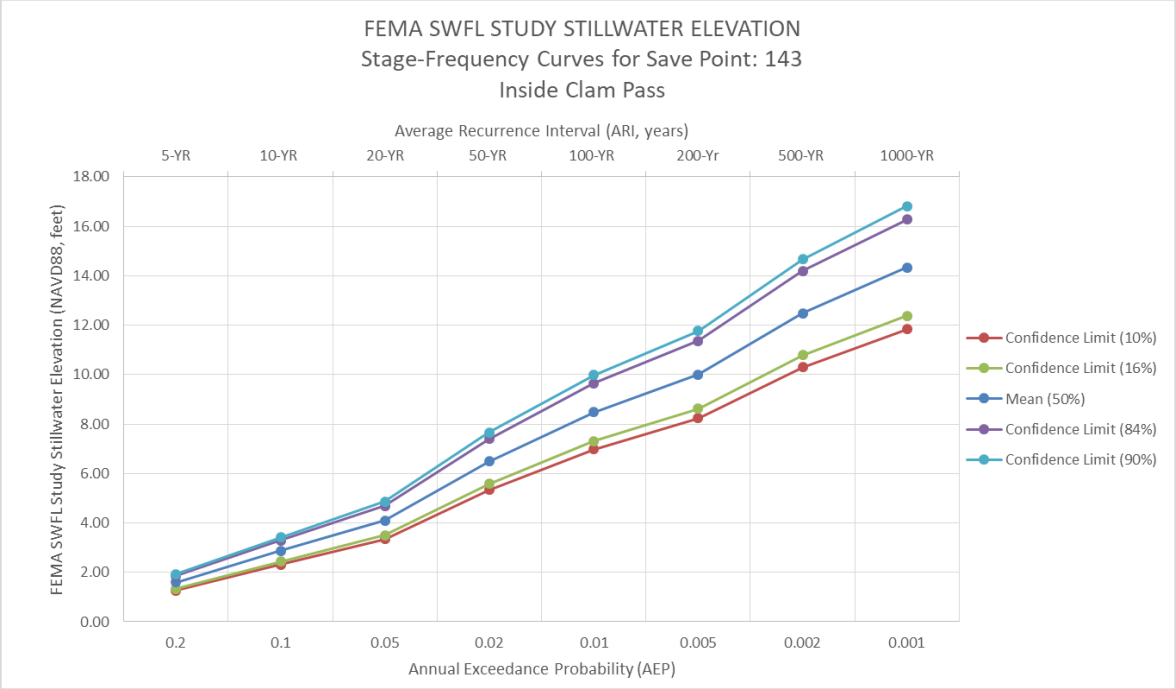

Figure 2.14 Stage-Frequency Curve for Save Point 143 (confidence limits shown).

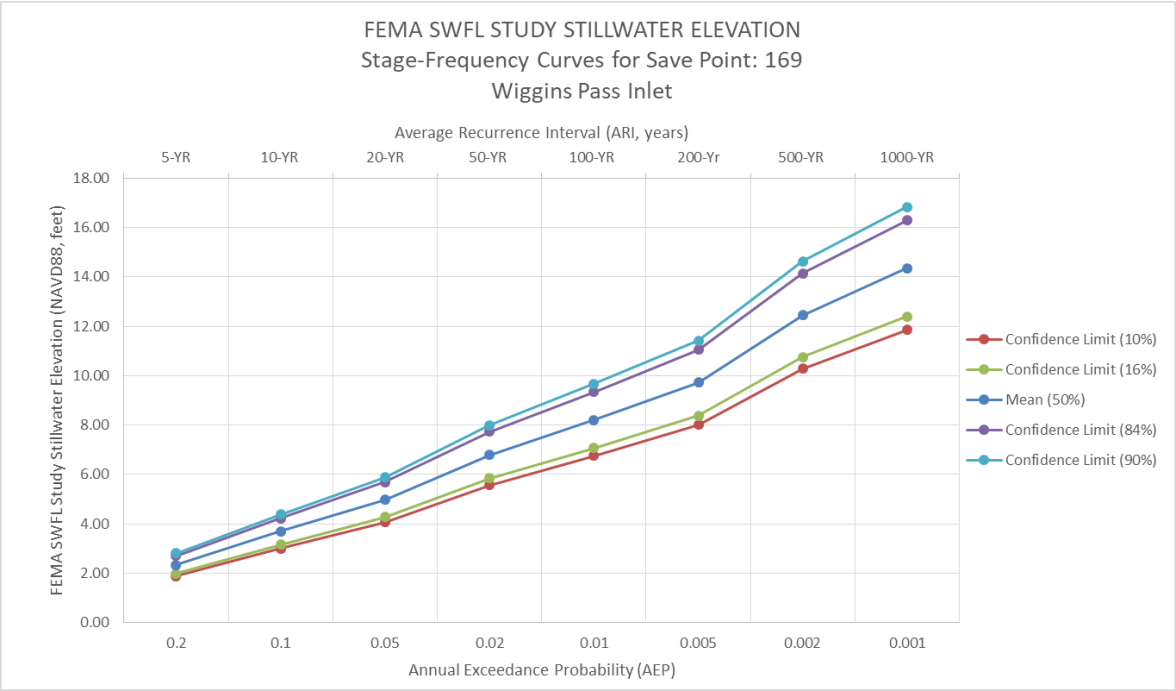

Figure 2.15 Stage-Frequency Curve for Save Point 169 (confidence limits shown).

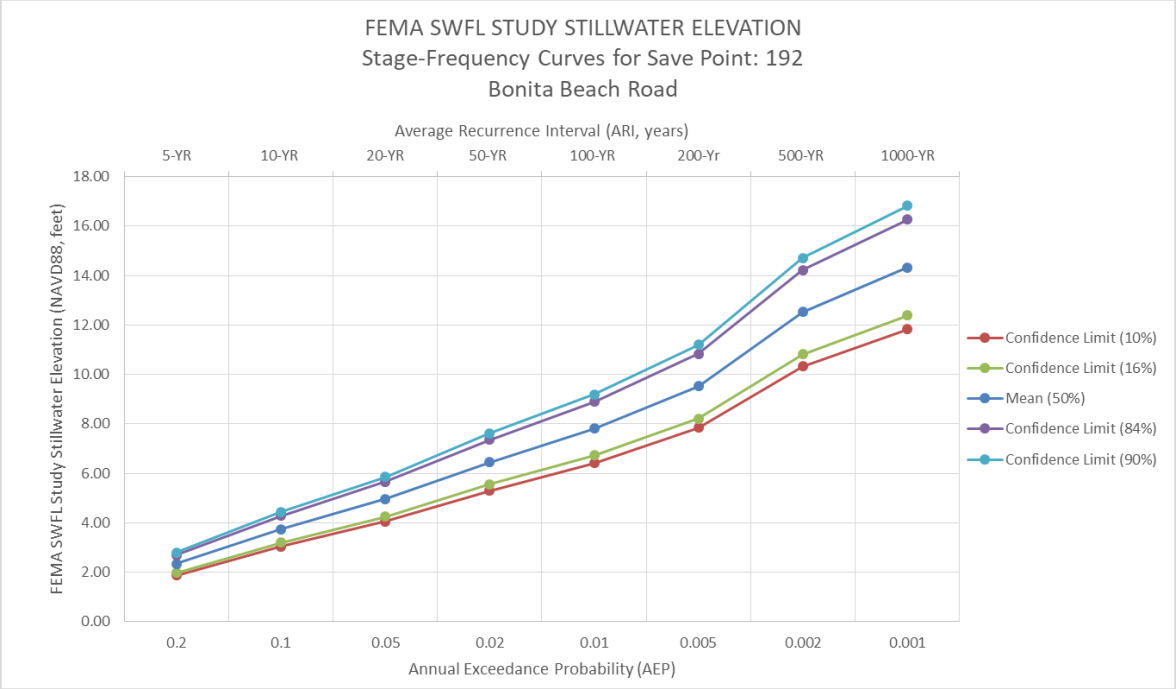

Figure 2.16 Stage-Frequency Curve for Save Point 192 (confidence limits shown).

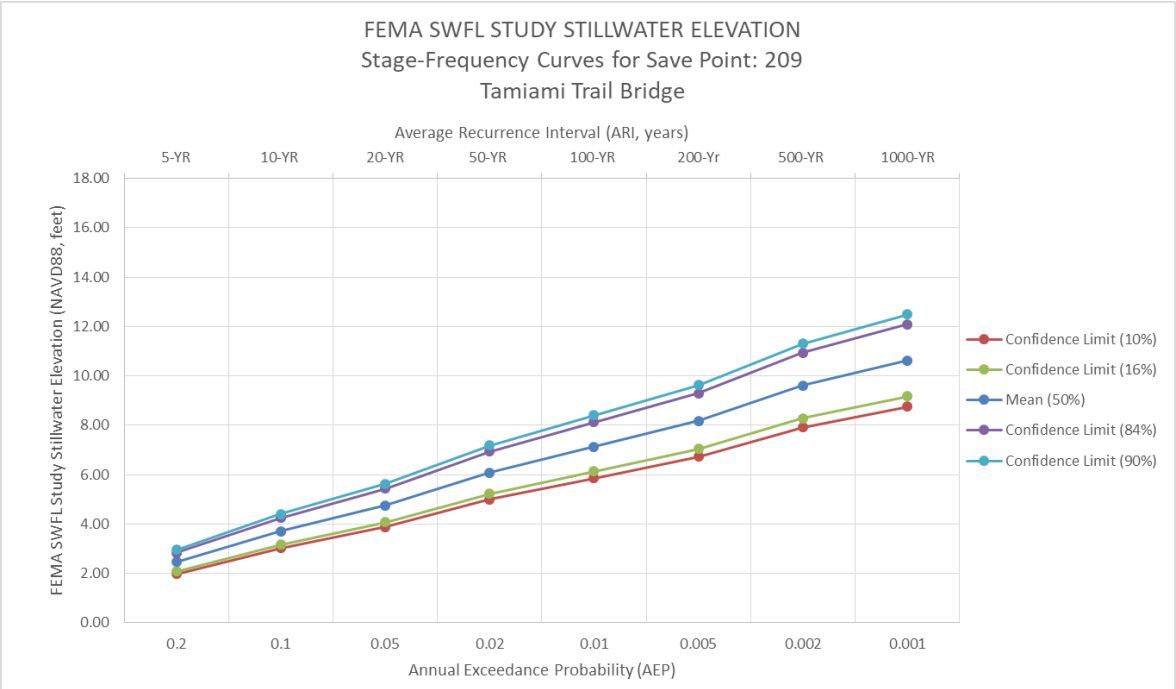

Figure 2.17 Stage-Frequency Curve for Save Point 209 (confidence limits shown).

Risk-based discussion involves comparing the 50%, 84%, and 90% confidence limits and how that impacts adaptive management and if the confidence limits impact wave overtopping. A design event corresponding to a particular frequency of storm event with an appropriate level of assurance of being contained by the authorized alternative, is typically determined through the planning process and establishes the design floodwall and levee grade. It is generally desired to choose a higher confidence limit (i.e., 84% or higher). If deemed appropriate, additional superiority may be added to the design grade (top of a floodwall/levee). In coastal areas, use of the risk based concept does provide for some allowable rates of floodwall/levee overtopping. The top-of-levee/floodwall design level is based on the elevation which limits the overtopping rates to some appropriate allowable rate.

Risk-based discussion also involves the accuracy and appropriateness of the modeling performed for the FEMA SWFL Study, especially in shallow water conditions such as those for the back bay analysis. ADCIRC, the current standard for hydrodynamic modeling, should not have problems providing accurate results in shallow water conditions. In shallow waters, some factors like bottom friction become more dominant relative to deeper waters, but for these studies ADCIRC must be validated across the study area, regardless of depth. For this study it is assumed that ADCIRC was properly validated for the FEMA study and that the mesh had adequate resolution within the study area. There is plenty of documentation provided on the study and included in the references to support this assumption.

Regarding the simulation of waves, unstructured SWAN uses the same mesh as ADCIRC so the high-resolution is preserved. Though the simulation of nearshore waves and waves in shallow water environments is complex, and can present greater uncertainty relative to storm surge simulations, from a practical standpoint there's no certainty that the alternatives would yield more accurate results. Moving to an offshore location would result in waves that are too large for a typical back bay area, producing unrealistic and biased economic results. It is possible to use a deeper water location and then transform back to shallow waters within the back bays, but SWAN coupled with ADCIRC, if properly validated, should perform better than linear wave theory or 1D models typically used for these nearshore transformations. A 2D model, like Bouss-2D or FUNWAVE, have better representation of wave diffraction/refraction physics, but run into a myriad of issues, like being uncoupled from the surge, unrealistic flat bottom or static water level, and possibly inadequate representation of bottom friction, besides being computationally too expensive for large study areas. Thus, ADCIRC/SWAN should still be the preferred approach.

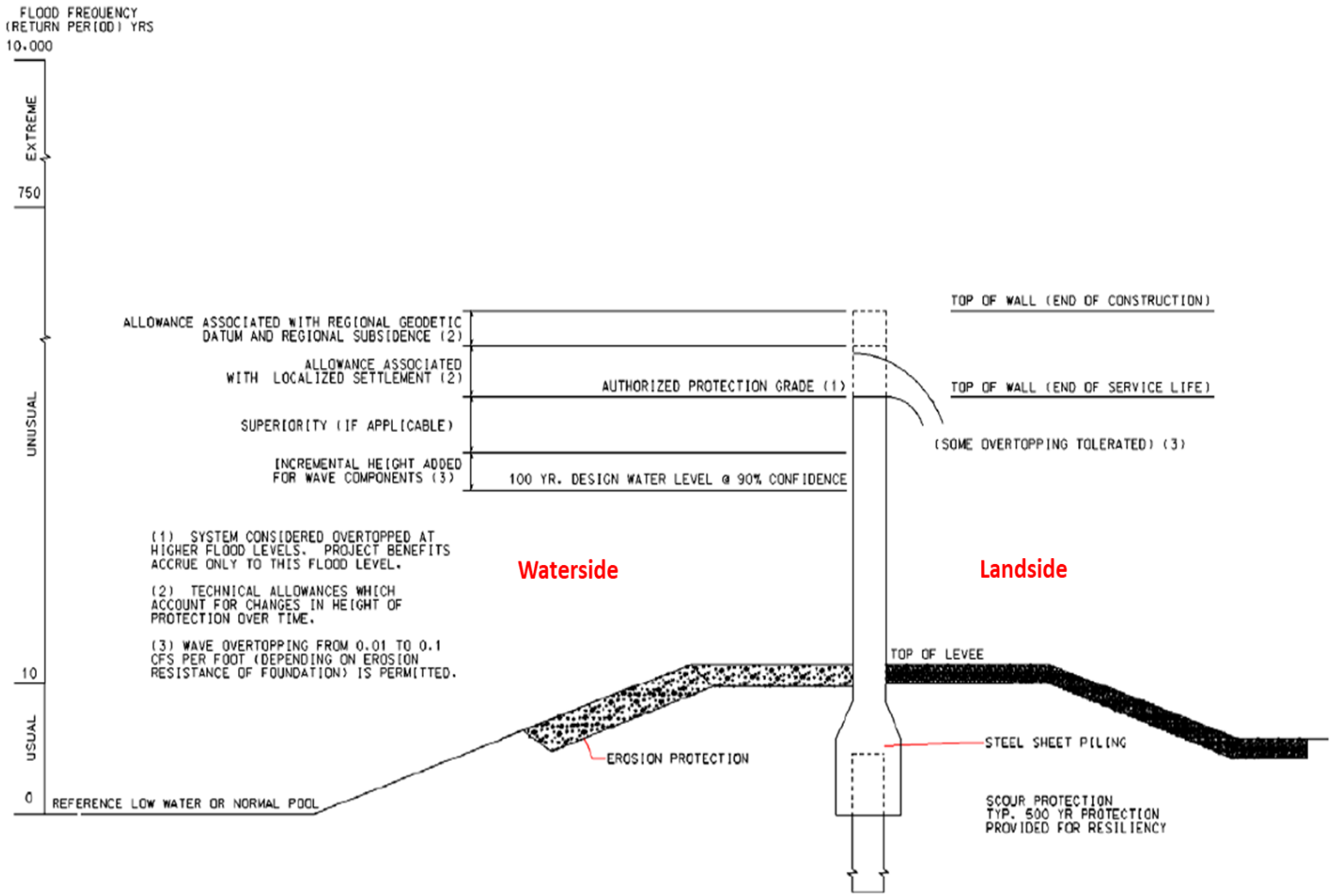

Risk Based Concept for Wall/Levee Structure

Figure 2.18 Image modified from EC 1110-2-6066.

The 90% CL Stillwater elevations are approximately 1.2-1.5 feet greater than the 50% CL for the 100 YR still water level and were ultimately chosen for the design water levels for dunes and floodwalls.

During the PED phase, higher resolution and locally calibrated models will be used to model these complex areas, and water levels will be refined. While the team suspects that this refinement may lead to decreases in water level, it is possible that water levels will increase in some areas. Furthermore, a 90% confidence interval will not be used for final design. The ultimate design will rely upon a confidence interval chosen in consideration of all the risks and consequences facing the project, in accordance with ER 1105-2-101.

2.7 HISTORICAL TIDE GAUGE ANALYSIS VS. NUMERICAL MODELING

There have been discussions in the past about computing frequency water levels from a historical tide gage analysis versus computer modeling (in this case the FEMA SWFL Study modeling). The historical record at the NOAA Naples Pier gauge, established in 1965, has no record of the largest events which caused significant storm surge flooding to the Greater Naples Area (see Table 1.1 Historical Storm Events. The highest waters levels recorded since the gauge was established range from 3 - 4.6 ft (NAVD88), with the 4.6 ft elevation occurring during Hurricane Irma in September 2017. These recorded historical maximum water levels are approximately equal to a 10% ACE flood to 5% ACE flood (10 to 20-year) tidal events. A statistical gage analysis of the historical record may suggest that what has occurred in the past will occur in the future, this may underestimate the risk. Modeling effects, such as what was done for the FEMA SWFL Study, provide an opportunity to evaluate impacts of stronger hypothetical storms that may not have occurred on record, but could occur.

CHAPTER 3 IMPACTS OF CLIMATE CHANGE

3.1 GUIDANCE

Climate change is defined as a change in global or regional climate patterns. Climate change has already been observed globally and in the United States. These included increases and changes in air and water temperatures, reduced frost days, increased frequency and intensity of heavy downpours, a rise in sea level, and reduced snow cover, glaciers, permafrost, and sea ice. Climate change has the potential to affect all of the missions of the United States Army Corps of Engineers (USACE). USACE mission in regards to climate change is: "To develop, implement, and assess adjustments or changes in operations and decision environments to enhance resilience or reduce vulnerability of USACE projects, systems, and programs to observed or expected changes in climate". The USACE's Climate Change Program develops and implements practical, nationally consistent, and cost-effective approaches and policies, to reduce potential vulnerabilities to the Nation's water infrastructure resulting from climate change and variability. The Department of the Army Engineering Regulation 1100-2-8162 (31 Dec 2013) requires that future Relative Sea Level Rise (RSLR) projections must be incorporated into the planning, engineering design, construction and operation of all civil works projects. The structural components of the proposed alternatives in consideration of the "low", "intermediate", and "high" potential rates of future RSLR were evaluated. This range of potential rates of RSLR is based on the findings of the National Research Council (NRC, 1987) and the Intergovernmental Panel for Climate Change (IPCC, 2007).

The same goes for hydrologic changes due to climate change. There is guidance for the Hydraulics and Hydrology analysis to incorporate Climate Change. This USACE guidance ECB (Engineering and Construction Bulletin) 2018-14, dated 10 September 2018 and expires 10 September 2020, and is titled "Guidance for Incorporating Climate Change Impacts to Inland Hydrology in Civil Works Studies, Designs, and Projects". This ECB "provides guidance for incorporating climate change information in hydrologic analyses in accordance with the USACE overarching climate change adaptation policy. This policy requires consideration of climate change in all current and future studies to reduce vulnerabilities and enhance the resilience of our water resources infrastructure." Hydrologic processes are very sensitive to changes in temperature, which can affect the form of precipitation (rain), precipitation intensity and volume, the timing and volume of runoff, and conditions that cause or enhance drought. Observed climate change and variability have affected USACE water resources management-related missions and operations. USACE has developed and implemented policy and guidance to continue to provide reliable services in changing conditions. This chapter discusses the climate change impacts of and predictions for SLR and hydrology and how they influenced the design.

3.2 COMPONENTS OF RELATIVE SEA LEVEL RISE

RSLR considers the effects of (1) the eustatic, or global, average of the annual increase in water surface elevation due to the global warming trend, and (2) the "regional" rate of vertical land movement (VLM) that can result from localized geological processes, including the shifting of tectonic plates, the rebounding of the Earth's crust in locations previously covered by glaciers, the compaction of sedimentary strata and the withdrawal of subsurface fluids (USGS 2013). Collier County is located in an area that does not experience land subsidence.

3.3 RATES OF RELATIVE SEA LEVEL RISE

When calculating the intermediate and high rates of RSLR, the local rate of VLM must first be determined. An example calculation of Collier County is provided in Section 3.2.4 – Determining Local VLM. In July 2014, USACE published guidance on how to adapt to changing sea levels, Engineer Pamphlet (EP) 1100-2-1, Procedures to Evaluate Sea Level Change: Impacts, Responses and Adaptation. How RSLR is calculated is stated in the following paragraphs.

3.3.1 Historic Rate of Relative Sea Level Rise

The historic rate of future RSLR (or USACE Low Curve) is determined directly from gage data gathered in the vicinity of the project area. The nearest NOAA tide gage from which tide data can be evaluated include: The Naples Pier gauge in Naples, Florida (NOAA Station 8725110). Tide conditions at Naples indicate a relative sea level trend of 2.85 +/- 0.44 mm/year (Figure 3.1).

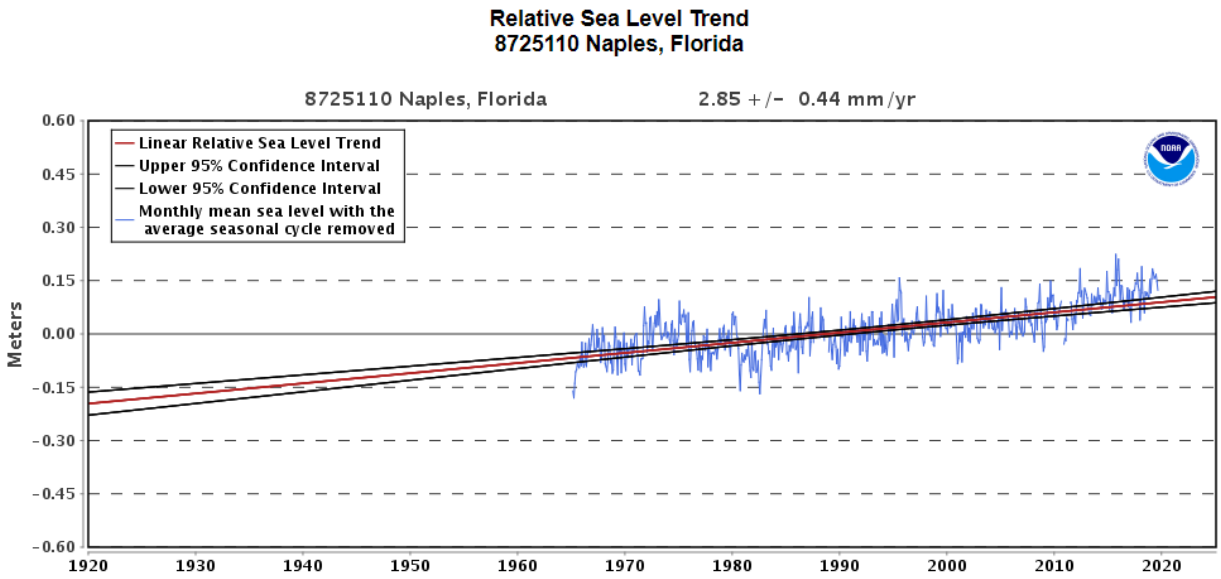

Figure 3.1 Relative Sea Level Trend at Naples, Florida (NOAA Station # 8725110). Site accessed December 2019.

3.3.2 Intermediate Rate of Relative Sea Level Rise

The intermediate rate or "USACE Intermediate Curve" of local mean RSLR is estimated by considering the modified National Research Council (NRC) projections and adding the appropriate value to the local rate of vertical land movement. The intermediate rate of relative (local) sea level rise is based on the modified NRC Curve I (Figure 3.2) since its value is comparable to that of the IPCC projection.

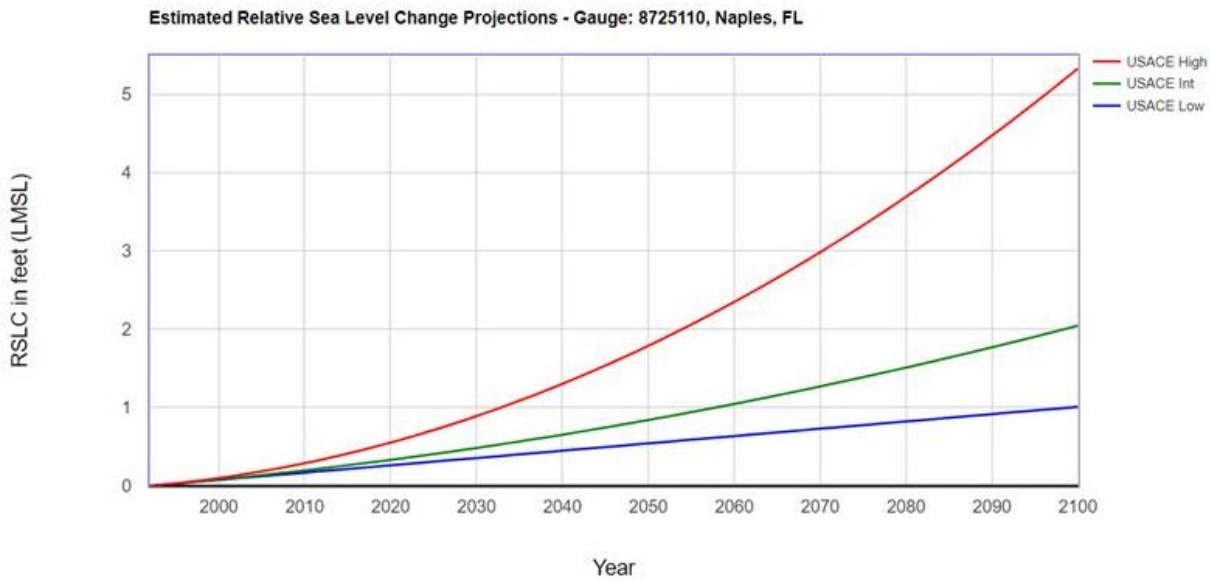

Figure 3.2 Modified NRC curves for predicting future rates of RSLR.

NRC Curve I is based on the general equation $E(t) = 0.0017t + bt^2$, where
the constant 0.0017 = the IPCC 2007 annual rate of eustatic SLR in meters;
t = time in years (relative to the year 1986 when the curves were developed) and;
$b = 2.71E^{-5}$.

3.3.3 High Rate of Relative Sea Level Rise

The high rate or "USACE High Curve" of mean RSLR is estimated by determining the modified NRC Curve III value and adding it to the local rate of vertical land movement. This high rate scenario exceeds the 2001 and 2007 IPCC projections and considers the potential rapid loss of ice from Antarctica and Greenland.
NRC Curve III is also based on the general equation $E(t) = 0.0017t + bt^2$; however, the constant b changes to $b = 1.13E^{-4}$.

For both the intermediate and high rates of RSLR, the NRC curves accelerate upward over time beginning in the year 1992 when the curves were developed; therefore, it is necessary to estimate RSLR for a particular time horizon relative to 1992.

3.3.4 Determining Local VLM

The local rate of VLM, which is considered to be constant through time, is determined by subtracting the NRC/IPCC eustatic SLR value (1.7 mm/yr.) from the local mean sea level

trend. Recall that the two components figuring into the local mean sea level include the RSLR value and the local rate of VLM. The mean rate of RSLR at the Naples Pier station is +2.85 mm/year (approximately 5.6 inches in 50 years).

The local rate of VLM at Naples Pier is calculated from the relationship:

VLM_{Naples}= [local rate of RSLR] – [eustatic rate of SLR], or
VLM_{Naples}= 2.85 mm/yr. – 1.7 mm/yr. = 1.15 mm/yr. (0.045 in./yr.)

At the Naples Pier, the local rate of VLM accounts for a total of 2.25 inches (0.045 in. /yr. x 50 yrs.) at a 50-year time horizon. This local rate of VLM is added back into the sea level rise computations after the eustatic portion has been determined from NRC curves I and III.

3.4 CALCULATING RELATIVE SEA LEVEL RISE

3.4.1 Historic Rate

The historic rate of relative sea level rise is determined by extrapolating the mean RSLR trend and multiplying it by the desired time horizon. The RSLR trend at Naples Pier is 2.85 mm/yr. Based on the historic rate of RSLR it can be expected that sea level will rise 5.6 inches over a 50-year time horizon.

3.4.2 Intermediate Rate

The intermediate rate of sea level rise is computed using the equation

$$E(t_2) - E(t_1) = 0.0017(t_2 - t_1) + b(t_2^2 - t_1^2) + \text{local VLM}$$

Where t_1 and t_2 represent the start and end dates of the projected time horizon in years, relative to 1992; therefore, t_1=38yr and t_2=88 yr (2030 and 2080 respectively) and b is a constant equal to 0.0000271 m/yr.

RSLR = (0.0017 m/yr (88-38) + 0.0000271 m/yr. (88^2-38^2)) x (3.281 ft. /m) + (0.045 x 50 yrs.)/12 in/ft. ≈ 1.03 ft.

This is stating from the start of the project economic period of analysis (2026) to the end of the project economic period of analysis (2076), the sea level is expected to rise approximately 1.03 feet, which relates to what has been calculated in Table 3.1, Table 3.2, and Table 3.3.

3.4.3 High Rate

The high rate of RSLR is computed using the equation

$$E(t_2) - E(t_1) = 0.0017(t_2 - t_1) + b(t2^2 - t1^2) + \text{local VLM}$$

Where t_1 and t_2 represent the start and end dates of the projected time horizon in years, relative to 1992; therefore, t_1=38yr and t_2=88 yr (2030 and 2080 respectively) and b is a constant equal to 0.000113 m/yr.

3.5 PROJECTED WATER SURFACE LEVEL INCREASE

The Collier County CSRM project design water level stages were derived from FEMA SWFL Study modeling efforts completed in 2017. Table 3.1 shows the projected increase in water surface elevation for the historic, intermediate, and high rates of future sea level rise at Naples, FL from 1992 (the mid-point of the current National Tidal Datum Epoch) up to the year 2100 (see Figure 3.3 for illustration of future sea level rise and subsidence).

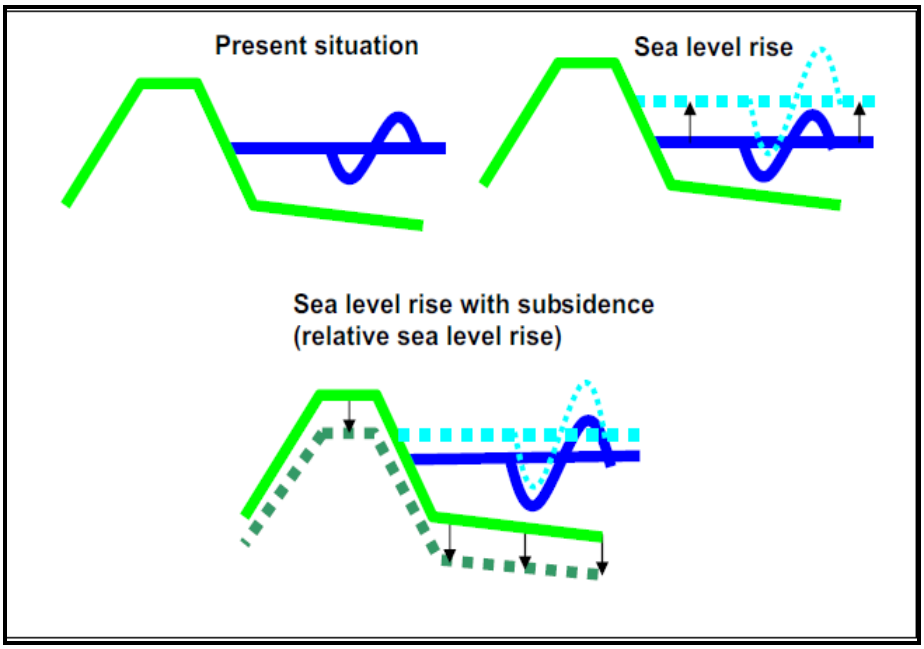

Figure 3.3 Illustrations and simple explanation of future sea level rise and subsidence.

Table 3.1 Increase in predicted water surface elevations at Naples Pier – Naples, FL under the low, intermediate and high rates of future RSLR USACE Curves computed using criteria in USACE ER 1100-2-8162 (in feet).

Estimated Relative Sea Level Change
from 1992 To 2100
8725110, Naples, FL
User Defined Rate: 0.00935 feet/yr
All values are expressed in feet

Year	USACE Low	USACE Int	USACE High	Year	USACE Low	USACE Int	USACE High
1992	0	0	0	2046	0.51	0.76	1.59
1994	0.02	0.02	0.02	2048	0.52	0.8	1.69
1996	0.04	0.04	0.04	2050	0.54	0.84	1.79
1998	0.06	0.06	0.07	2052	0.56	0.88	1.9
2000	0.08	0.08	0.1	2054	0.58	0.92	2.01
2002	0.09	0.1	0.13	2056	0.6	0.96	2.12
2004	0.11	0.13	0.17	2058	0.62	1	2.23
2006	0.13	0.15	0.2	2060	0.64	1.05	2.35
2008	0.15	0.17	0.25	2062	0.66	1.09	2.47
2010	0.17	0.2	0.29	2064	0.67	1.13	2.6
2012	0.19	0.22	0.34	2066	0.69	1.18	2.72
2014	0.21	0.25	0.39	2068	0.71	1.22	2.85
2016	0.22	0.28	0.44	2070	0.73	1.27	2.99
2018	0.24	0.3	0.49	2072	0.75	1.32	3.12
2020	0.26	0.33	0.55	2074	0.77	1.37	3.26
2022	0.28	0.36	0.61	2076	0.79	1.41	3.4
2024	0.3	0.39	0.68	2078	0.8	1.46	3.55
2026	0.32	0.42	0.75	2080	0.82	1.51	3.69
2028	0.34	0.45	0.82	2082	0.84	1.56	3.84
2030	0.36	0.48	0.89	2084	0.86	1.61	4
2032	0.37	0.52	0.97	2086	0.88	1.67	4.16
2034	0.39	0.55	1.05	2088	0.9	1.72	4.31
2036	0.41	0.58	1.13	2090	0.92	1.77	4.48
2038	0.43	0.62	1.22	2092	0.94	1.82	4.64
2040	0.45	0.65	1.3	2094	0.95	1.88	4.81
2042	0.47	0.69	1.39	2096	0.97	1.93	4.98
2044	0.49	0.73	1.49	2098	0.99	1.99	5.16
				2100	1.01	2.05	5.33

The scenarios presented in the USACE guidance estimate that the sea level, from the year 2018 thru 2100 for Collier County at NOAA's Naples Pier Gage, will increase 0.77 feet from the low a scenario, 1.75 feet for the intermediate scenario and 4.84 feet for the high scenario.

The Sea Level Tracker tool was used to visualize the observed changes in sea level and to compare rends to the projected sea level changes per USACE Engineer Regulation 1100-2-8162 and Engineer Pamphlet (EP) 1100-2-1. The tool shows the historical, observed changes in mean sea level (MSL) as measured and reported for National Oceanic Atmospheric Administration (NOAA) tide gauges, mapped against the USACE sea level change (SLC) projections. Taken together, the tool enables the comparison of actual SLC with USACE SLC projections (as described in ER 1100-2-8162), along with observed monthly water levels and the computation of SLC trends based on historical data (Sant-Miller et al, 2018). Figure 3.4 displays the results of this tool, comparing actual SLC for the 19-year (metonic cycle) midpoint moving average (dark blue line) and 5-year midpoint moving average (orange line) against the USACE SLC curve projections. The observed 19-year moving average is tracking along the intermediate SLC scenario while the 5-year moving average has been tracking nearer to the high scenario since 2014.

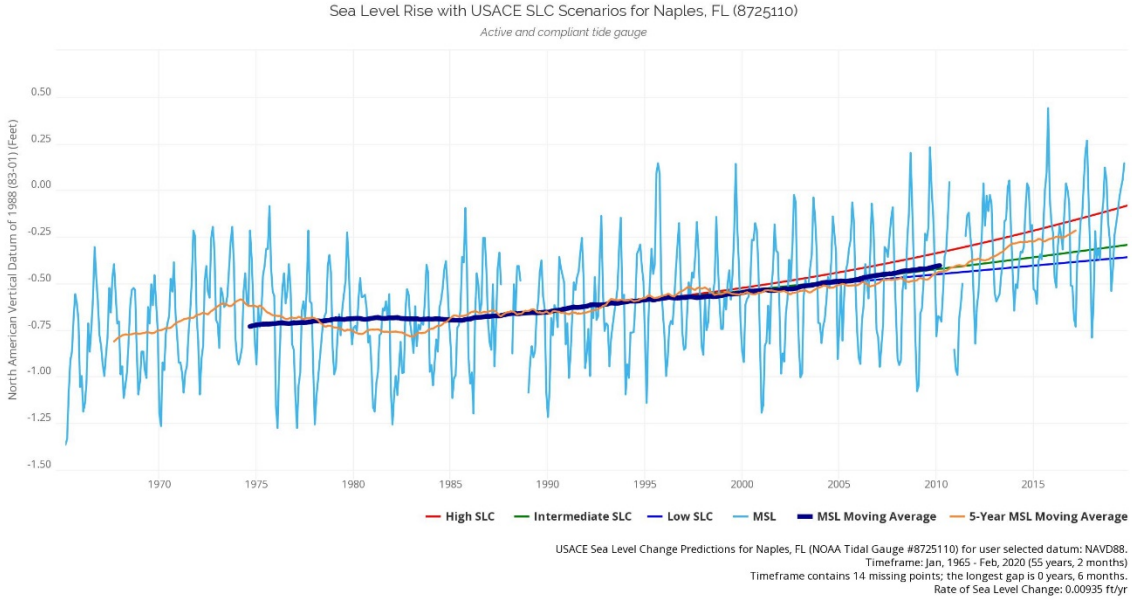

Figure 3.4 Historical Sea Level Rise with USACE SLC Scenarios for Naples, FL (8725110)

Table 3.2 and Table 3.3 show the FEMA SWFL Study Stillwater levels for 2018, 2030, and 2079 (which includes RSLR) for selected save points and beach reaches. Note Table 3.2 is not all the available save points, but a selection of a few to show the general distribution of project SWL frequencies throughout the project area. Figure 3.5 displays the locations of selected save points and a few of the R-monuments along the coast which were used to delineate beach reaches and Figure 3.6 provides a color contour map representation of the projected water level increases from the year 2018 to 2079.

The tables show five frequencies (20-yr ARI flood, 50-yr ARI flood, 100-yr ARI flood, 200-yr ARI flood, and 500-yr ARI flood) which contributed to the engineering analysis for shoreline protection. The table assumes relative sea level rise to the years 2030 and 2079 based on the USACE intermediate curve. The PDT decided that the 100-yr ARI flood (1%) stillwater elevation should be the primary value used in the range of elevations used for formulating separable measures throughout Collier County, with potential in increase to 200-yr and 500-yr levels if existing topography to tie in and economics allow. The PDT determined that the 2079 20-yr flood (50%) event was the minimum stillwater elevation that would create substantial enough flood damages to justify a large flood reduction construction project as the heights are approximately the same or less in many areas along the beach as the existing dune heights, an thus is the lowest limit in the table for analysis. One can see in Table 3.3 that the SWL generally decrease from North to South along the beaches.

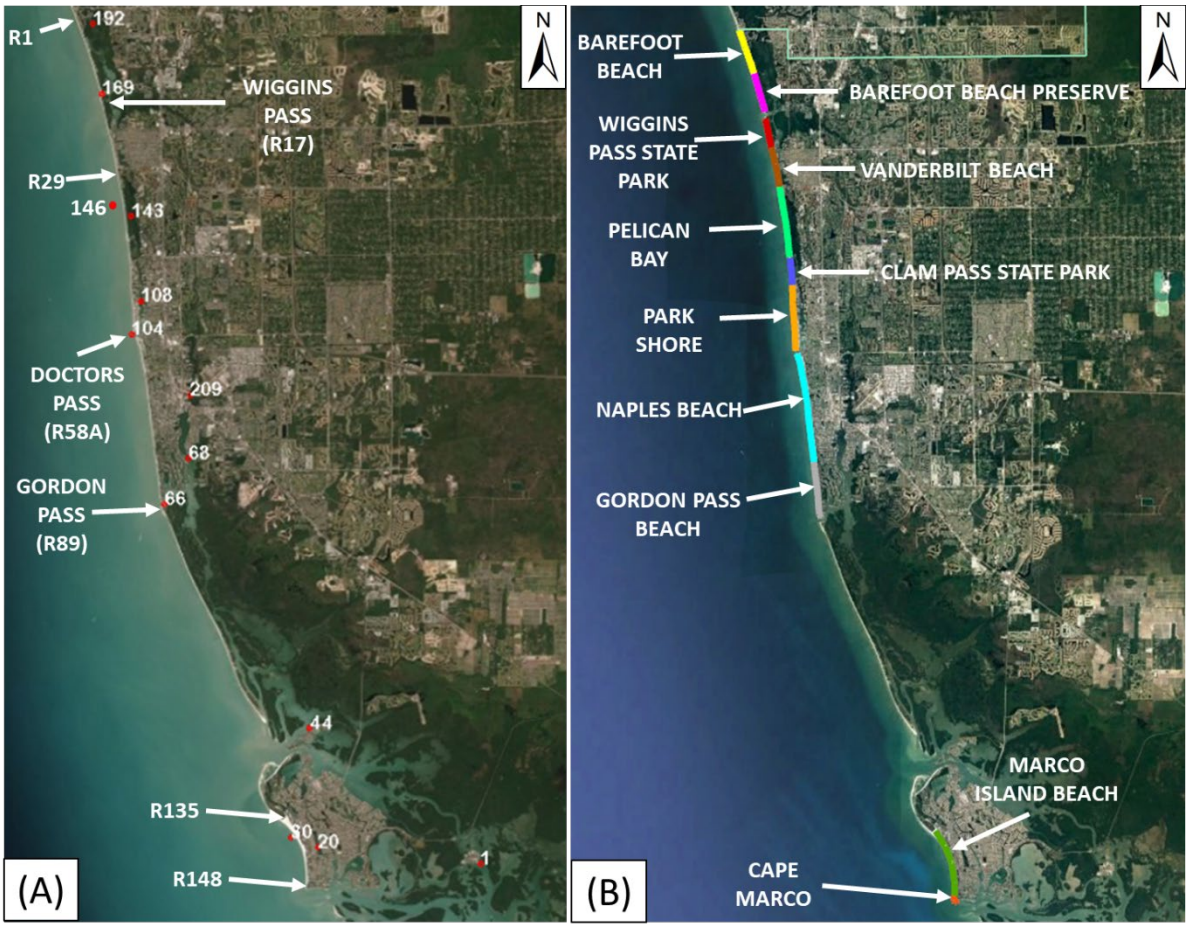

Figure 3.5. (A) Collier County Save Point and R-Monument Locations (B) Collier County Beach Reaches

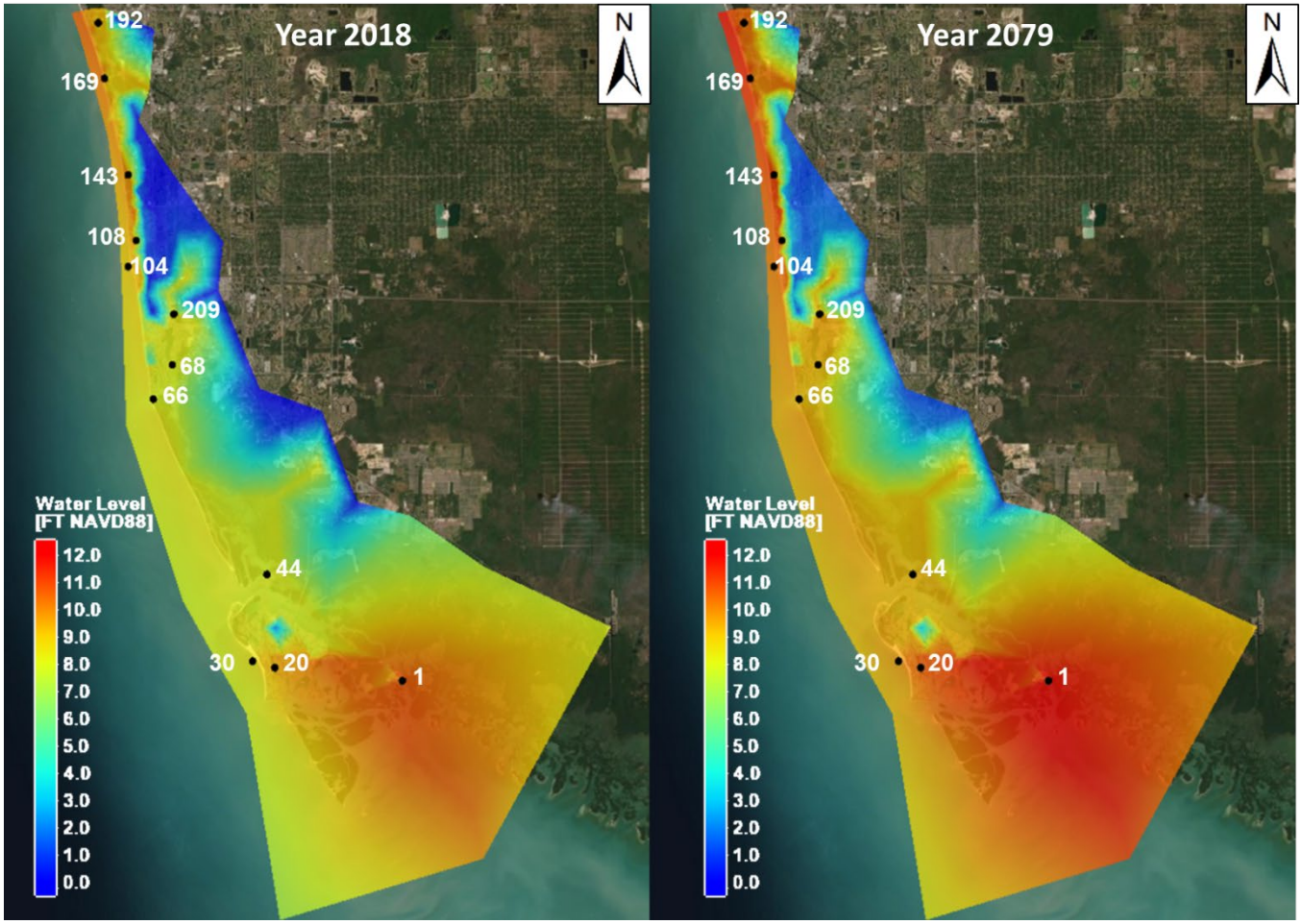

Figure 3.6 Projected Water Level increase from 2018 to 2079

Table 3.2 Water Levels (in feet) for selected Collier County Save Points at 2018, 2030, and 2079

	Study Surge Elevations (FT NAVD88)- Year 2018					Study Surge Elevations (FT NAVD88)- Year 2030					Study Surge Elevations (FT NAVD88)- Year 2079				
Save Point Number	20-YR	50-YR	100-YR	200-YR	500-YR	20-YR	50-YR	100-YR	200-YR	500-YR	20-YR	50-YR	100-YR	200-YR	500-YR
1	7.2	9.2	10.9	12.6	14.5	7.4	9.4	11.1	12.7	14.6	8.4	10.4	12.1	13.7	15.7
20	6.3	8.1	9.4	10.7	12.2	6.5	8.3	9.6	10.9	12.4	7.5	9.3	10.6	11.9	13.4
30	5.4	7.2	8.7	10.1	11.8	5.6	7.4	8.9	10.3	12.0	6.6	8.4	9.9	11.3	13.0
44	5.1	6.7	8.1	9.4	11.0	5.3	6.9	8.3	9.6	11.2	6.3	7.9	9.3	10.6	12.2
66	5.3	6.8	8.0	9.4	11.8	5.4	7.0	8.2	9.6	11.9	6.4	8.0	9.2	10.6	13.0
68	5.4	6.9	8.1	9.4	11.3	5.5	7.0	8.3	9.6	11.5	6.5	8.0	9.3	10.6	12.5
104	5.6	7.8	9.1	10.5	13.0	5.8	7.9	9.2	10.6	13.2	6.8	8.9	10.3	11.6	14.2
108	6.2	8.3	9.7	11.2	14.1	6.4	8.5	9.8	11.3	14.3	7.4	9.5	10.9	12.4	15.3
143	4.9	7.7	10.0	11.8	14.7	5.0	7.8	10.2	11.9	14.9	6.0	8.8	11.2	13.0	15.9
146	6.0	8.3	9.9	11.5	14.2	6.2	8.5	10.0	11.7	14.4	7.2	9.5	11.1	12.7	15.4
169	5.9	8.0	9.7	11.4	14.6	6.1	8.2	9.8	11.6	14.8	7.1	9.2	10.9	12.6	15.8
192	5.9	7.6	9.2	11.2	14.7	6.0	7.8	9.4	11.4	14.9	7.0	8.8	10.4	12.4	15.9
209	5.6	7.2	8.4	9.6	11.3	5.8	7.4	8.6	9.8	11.5	6.8	8.4	9.6	10.8	12.5

Table 3.3 Water Levels (in feet) for Collier County Beach Reaches at 2018 and 2079

		Study Surge Elevations (FT NAVD88)- Year 2018					Study Surge Elevations (FT NAVD88)- Year 2030					Study Surge Elevations (FT NAVD88)- Year 2079				
	Reach	20-YR	50-YR	100-YR	200-Yr	500-YR	20-YR	50-YR	100-YR	200-YR	500-YR	20-YR	50-YR	100-YR	200-YR	500-YR
1	Barefoot Beach (R1-R9)	3.5	7.6	10.1	12.0	14.9	3.7	7.8	10.3	12.2	15.1	4.7	8.8	11.3	13.2	16.1
2	Barefoot Beach Preserve (R9-R16)	5.6	7.9	9.8	11.7	14.8	5.8	8.1	10.0	11.9	15.0	6.8	9.1	11.0	12.9	16.0
3	Wiggins Pass State Park (R17-R22)	5.8	8.0	9.6	11.5	14.6	6.0	8.2	9.8	11.7	14.8	7.0	9.2	10.8	12.7	15.8
4	Vanderbilt Beach (R22-R29)	5.6	7.9	9.5	11.3	14.5	5.8	8.1	9.7	11.5	14.7	6.8	9.1	10.7	12.5	15.7
5	Pelican Bay (R29- R41)	5.7	8.0	9.6	11.3	14.2	5.9	8.2	9.8	11.5	14.4	6.9	9.2	10.8	12.5	15.4
6	Clam Pass State Park (R42-R46)	5.8	8.1	9.6	11.2	13.9	6.0	8.3	9.8	11.4	14.1	7.0	9.3	10.8	12.4	15.1
7	Park Shore (R46- R57)	4.5	7.9	9.3	10.8	13.5	4.7	8.0	9.5	11.0	13.7	5.7	9.0	10.5	12.0	14.7
8	Naples Beach (R58A - R79)	3.6	6.5	8.3	10.0	12.7	3.7	6.6	8.4	10.2	12.9	4.8	7.6	9.5	11.2	13.9
9	Gordon Pass Reach (R79-R89)	4.7	6.5	7.9	9.6	11.9	4.9	6.6	8.1	9.8	12.1	5.9	7.7	9.1	10.8	13.1
10	Marco Island Beach (R135-R148)	4.4	6.7	8.7	10.1	11.7	4.6	6.9	8.9	10.2	11.9	5.6	7.9	9.9	11.3	12.9
11	Cape Marco (R148- G-4)	5.3	7.1	8.6	9.9	11.5	5.5	7.3	8.7	10.1	11.6	6.5	8.3	9.7	11.1	12.6

3.6 IMPACTS OF SEA LEVEL RISE DURING FUTURE YEARS

Engineer Pamphlet (EP) 1100-2-1, Global Changes – Procedures to Evaluate Sea Level Change: Impacts, Responses, and Adaptation, recommends analyzing the effects of SLR on the project at three future time period post construction (the year 2030). The time periods include 20 years after construction is completed (the end of calendar year 2049), 50 years after construction

(the end of calendar year 2079), and 100 years after construction (the end of calendar year 2129). This section will look at RSLR on the project at the year of 2079, which is the end of the project economic period of analysis and briefly discuss the RSLR rates over the project economic period of analysis for the 50% ACE flood (20 yr.), 2% ACE flood (50 yr.) and 1% ACE flood (100 yr.) and its potential impacts. Table 3.4 shows the predicted increase in SLR for the computed USACE curves 20 years (2049), 50 years (2079), and 100 years (2129) into the future after the proposed construction year of 2030.

Table 3.4 Additional Increase in SLR predicted 20 years, 50 years, and 100 years into the future (in feet) from project start year of 2030 to 2129

Year	USACE Low	USACE Int.	USACE High
2049	0.17	0.34	0.85
2079	0.45	1.01	2.73
2129	0.92	2.47	7.35

The values in Table 3.4 for the year 2049 and 2079, were derived from Table 3.1 in this sub-appendix. Table 3.1and the USACE curves shown in Figure 3.2 only predicts RSLR to the year 2100. Therefore, to project the increase in the sea level for the year 2129 (100 years into the future), the equations and rates shown in Sections 3.4.1, 3.4.2, and 3.4.3 were used to calculate the predicted increase in the sea level for the Low, Intermediate, and High rates to the year 2129. For the low curve, RSLR trend at Naples Pier of 0.00935 ft. /yr. was applied. Using this rate, RSLR for the lower curve will increase an additional 0.92 feet from the year 2030 to 2129. For the intermediate curve analysis show that the sea level will increase 2.47 feet between the years 2030 to 2129. For the high curve, SLR, will increase 7.35 feet between the years 2030 to 2129.

Table 3.5 to Table 3.6, display the stillwater levels with the projected increase in SLR from 2018 to 2129 for the Low, Intermediate and High USACE SLR curves.

The projected future conditions are shown to provide perspective on the future adaptability and resiliency of a constructed project, especially under the high USACE SLR scenario. As the intermediate USACE curve has been selected as the USACE curve for project formulation, it should be expected that the constructed project will be less resilient and will need to be adapted sooner than anticipated (before the end of the project's 50 year life cycle) should SLR similar to the USACE High curve value occur. Sensitivity to SLR differing scenarios for the Tentatively

Selected Plan will be evaluated during modeling as both Beach-*fx* and G2CRM allow for the selection of the SLR curve as an input.

Table 3.5 Water Levels (in feet) w/ RSLR at 2125 for Collier County Save Points

	Study Surge Elevations (FT NAVD88)- Year 2129														
	Low Curve					**Intermediate Curve**					**High Curve**				
Save Point Number	20-YR	50-YR	100-YR	200-YR	500-YR	20-YR	50-YR	100-YR	200-YR	500-YR	20-YR	50-YR	100-YR	200-YR	500-YR
1	8.8	10.8	12.5	14.2	16.1	9.8	11.8	13.5	15.2	17.1	13.0	15.0	16.7	18.4	20.3
20	8.0	9.8	11.1	12.4	13.9	9.0	10.8	12.1	13.3	14.9	12.2	14.0	15.3	16.5	18.0
30	7.1	8.9	10.4	11.8	13.4	8.1	9.9	11.4	12.8	14.4	11.2	13.0	14.5	15.9	17.6
44	6.8	8.4	9.7	11.0	12.7	7.7	9.3	10.7	12.0	13.6	10.9	12.5	13.9	15.2	16.8
66	6.9	8.5	9.7	11.1	13.4	7.9	9.5	10.6	12.1	14.4	11.1	12.6	13.8	15.2	17.6
68	7.0	8.5	9.7	11.0	12.9	8.0	9.5	10.7	12.0	13.9	11.2	12.7	13.9	15.2	17.1
104	7.3	9.4	10.7	12.1	14.7	8.3	10.4	11.7	13.1	15.7	11.5	13.6	14.9	16.3	18.8
108	7.9	10.0	11.3	12.8	15.8	8.9	11.0	12.3	13.8	16.7	12.0	14.1	15.5	17.0	19.9
143	6.5	9.3	11.6	13.4	16.3	7.5	10.3	12.6	14.4	17.3	10.7	13.5	15.8	17.6	20.5
146	7.7	9.9	11.5	13.2	15.8	8.7	10.9	12.5	14.2	16.8	11.8	14.1	15.7	17.3	20.0
169	7.5	9.7	11.3	13.1	16.3	8.5	10.7	12.3	14.1	17.3	11.7	13.8	15.5	17.2	20.4
192	7.5	9.3	10.9	12.9	16.4	8.5	10.3	11.8	13.8	17.4	11.7	13.4	15.0	17.0	20.5
209	7.3	8.8	10.1	11.3	13.0	8.3	9.8	11.0	12.3	14.0	11.4	13.0	14.2	15.4	17.1

Table 3.6 Water Levels (in feet) w/ RSLR at 2125 for Collier County Beach Reaches

		Study Surge Elevations (FT NAVD88)- Year 2129														
		Low Curve					Intermediate Curve					High Curve				
Reach		20-YR	50-YR	100-YR	200-YR	500-YR	20-YR	50-YR	100-YR	200-YR	500-YR	20-YR	50-YR	100-YR	200-YR	500-YR
1	Barefoot Beach (R1-R9)	5.2	9.3	11.8	13.7	16.5	6.2	10.3	12.8	14.6	17.5	9.3	13.5	15.9	17.8	20.7
2	Barefoot Beach Preserve (R9-R16)	7.3	9.5	11.5	13.4	16.5	8.3	10.5	12.4	14.4	17.5	11.4	13.7	15.6	17.5	20.7
3	Wiggins Pass State Park (R17-R22)	7.5	9.6	11.3	13.1	16.2	8.5	10.6	12.3	14.1	17.2	11.6	13.8	15.5	17.3	20.4
4	Vanderbilt Beach (R22-R29)	7.3	9.5	11.1	13.0	16.2	8.3	10.5	12.1	14.0	17.2	11.4	13.7	15.3	17.1	20.3
5	Pelican Bay (R29- R41)	7.3	9.7	11.3	13.0	15.8	8.3	10.7	12.3	14.0	16.8	11.5	13.8	15.5	17.1	20.0
6	Clam Pass State Park (R42-R46)	7.5	9.8	11.3	12.8	15.6	8.5	10.8	12.3	13.8	16.5	11.6	14.0	15.4	17.0	19.7
7	Park Shore (R46- R57)	6.2	9.5	11.0	12.5	15.2	7.2	10.5	12.0	13.5	16.2	10.3	13.7	15.2	16.7	19.4
8	Naples Beach (R58A - R79)	5.2	8.1	9.9	11.7	14.4	6.2	9.1	10.9	12.7	15.4	9.4	12.3	14.1	15.8	18.5
9	Gordon Pass Reach (R79-R89)	6.4	8.1	9.6	11.3	13.6	7.4	9.1	10.6	12.3	14.6	10.5	12.3	13.8	15.4	17.7
10	Marco Island Beach (R135-R148)	6.1	8.3	10.3	11.7	13.3	7.1	9.3	11.3	12.7	14.3	10.2	12.5	14.5	15.9	17.5
11	Cape Marco (R148- G-4)	7.0	8.8	10.2	11.5	13.1	8.0	9.7	11.2	12.5	14.1	11.1	12.9	14.4	15.7	17.3

3.7 CLIMATE CHANGE IMPACTS TO HYDROLOGY

The USACE January 2015 Civil Works Technical Report, CWTS-2015-03 for the South Atlantic Gulf Region of the U.S., focuses on temperature, extreme precipitation events, and stream flow trends and future findings. The report encompasses the HUC 03 region (see Figure 3.7 TR reference map.). The report states that trends in temperature and precipitation show a moderate increase, but a decrease in hydrology/stream flow. This is summarized in Figure 3.8 which is a matrix of observed and projected climate trends from CWTS-2015-03). For the projected hydrology/ stream flow trend, the chart shows no change. The report states that there is no clear trend. Some reports show a mild increase in flow and other show a mild decrease. This uncertainty on what will happen in the futures makes it challenging to determine the effects of climate change will have on the project due to hydrology/stream flow.

If precipitation in extreme events increases as projected in Figure 3.8, potential project vulnerabilities may include increased interior rainfall runoff leading to increased rainfall flooding. This may require increased pump capacity and longer pumping times, causing increased maintenance cost. Interior flooding may also increase operational complexity if operators have more difficulty navigating flooded streets to access project sites.

Locally, the official climatological gauge for Collier is located at the Naples Municipal Airport. Figure 3.9 and Figure 3.10 represent the linear trends in annual total precipitation and

annual average temperatures, respectively, over the period 1943-2018. The annual precipitation is increasing; the temperature is constant in Naples.

Figure 3.7 TR reference map.

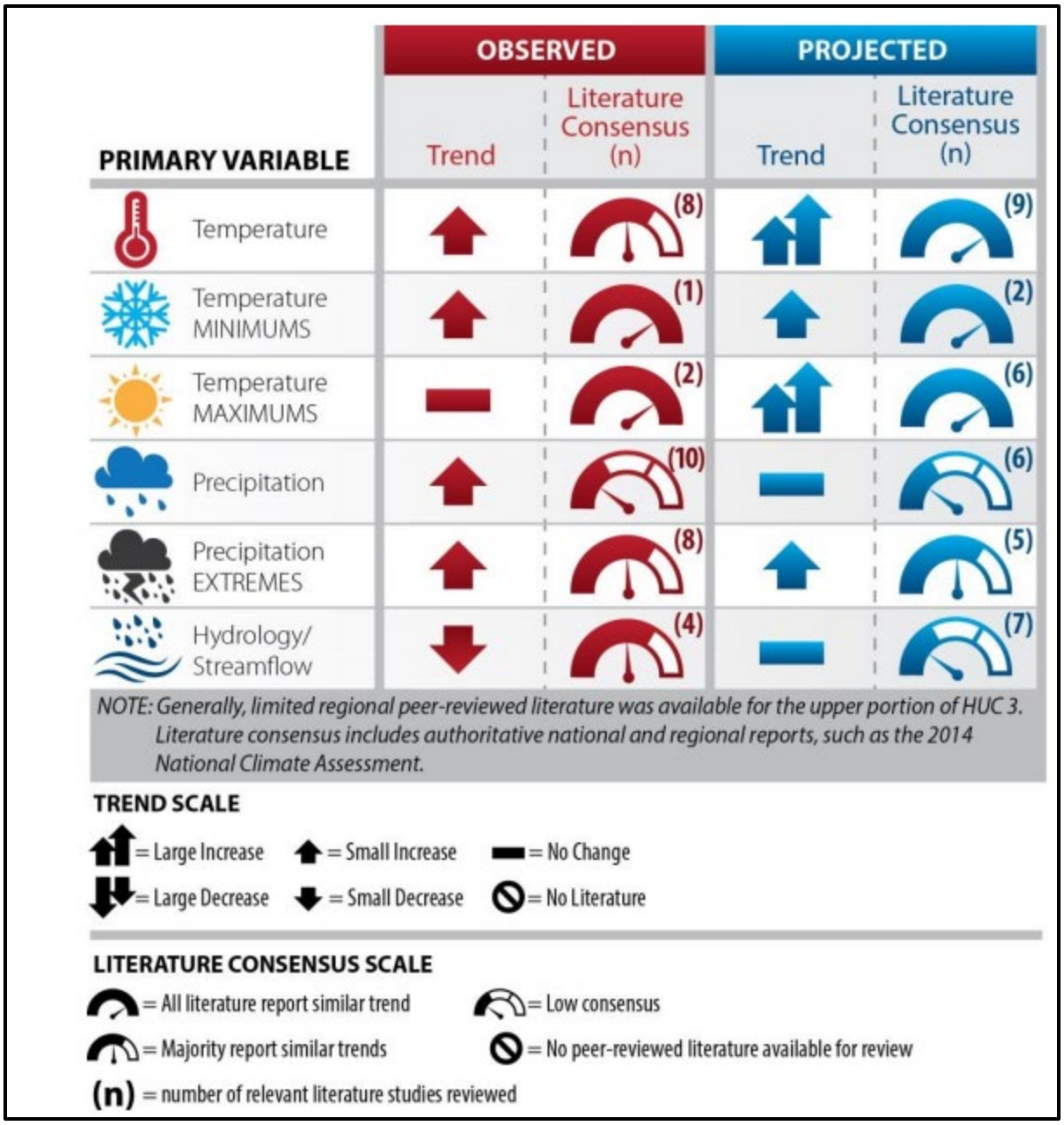

Figure 3.8 Summary matrix of observed and projected climate trends from CWTS-2015-03

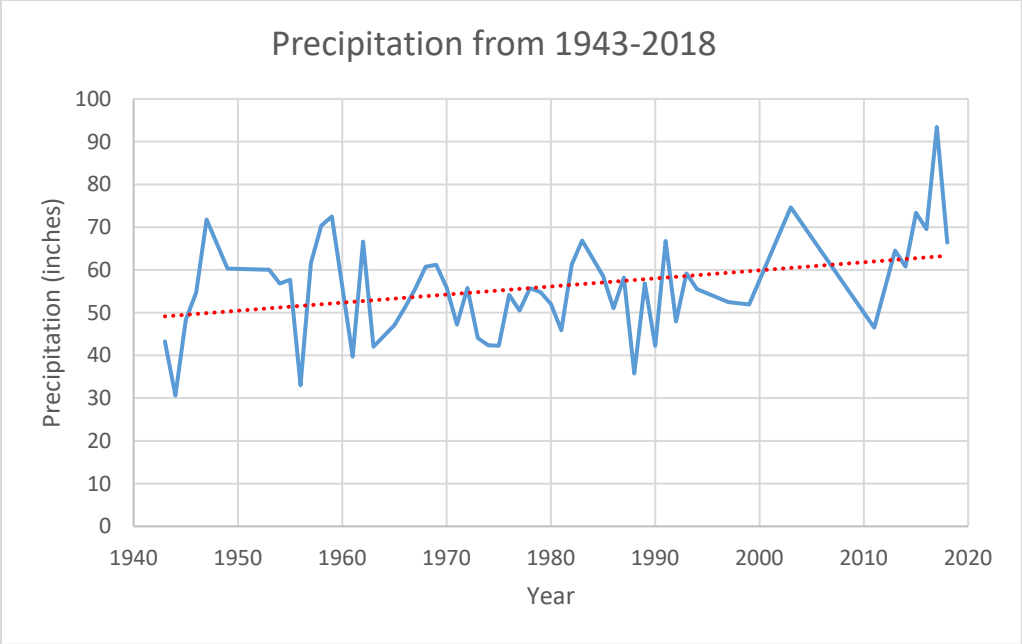

Figure 3.9 Precipitation Trend for Naples.

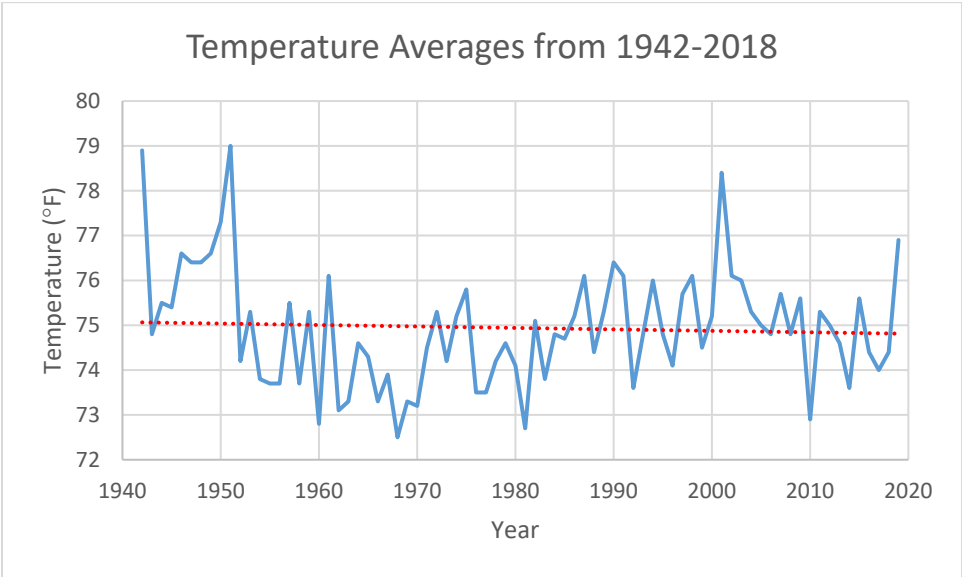

Figure 3.10 Temperature Trend for Naples.

The ECB (Engineering and Construction Bulletin) 2018-14 includes the reference to the Climate Hydrology Assessment tool. From the ECB, "The Climate Hydrology Assessment tool allows users to access data concerning past (observed) changes as well as potential future (projected) changes to relevant hydrologic inputs. This provides qualitative information about future climate conditions useful to decision-making officials, and allows districts across the country to develop repeatable analytical results using consistent information. The tool reduces potential error while increasing the speed of information development so that data can be used earlier in the decision-making process, ideally in the development of risk registers."

For the Hydrology Tools, both the Nonstationarity Detection Tool and the Climate Hydrology Assessment Tool have USGS stream gages that are listed per HUC watershed. For this study area this tool is not applicable because there are no USGS stream gages that are located in the study area. It is the tide gage that most represents the water levels in the study area.

Hydrologic Climate change for this study area was addressed by using an array of frequencies for the Peak Flood Analyses. The rainfall events are the 2-, 5-, 10-, 25-, 50-, 100-, and 500- year frequencies. With this method, an array of flows and storage levels in the USACE HEC-HMS Hydrologic Modeling System program can show the potential of such large rainfall events. Please refer to Chapter 7 of this report for information on the interior drainage analysis preformed for this study.

The rainfall amounts used for input into the hydrologic model are from the NOAA Atlas 14 Vol 9 Version 2.0, which are the point precipitation frequency estimates. From the NOAA Atlas 14 report, "The 1-day annual maximum series were analyzed for linear trends in mean and variance and shifts in mean to determine whether climate change during the period of record was an issue in the production of this atlas (Appendix A.3). The results showed little observable or geographically consistent impact of climate change on the annual maximum series during the period of record and so the entire period of record was used. The estimates presented in this atlas make the necessary assumption that there is no effect of climate change in future years on precipitation frequency estimates. The estimates will need to be modified if that assumption proves quantifiably incorrect."

3.8 ADAPTATION OF THE COMPONENTS OF THE RECOMMENDED PLAN FOR CLIMATE CHANGE

The Collier County CSRM Project consists of components that are adaptable to future increases in sea level due to climate change. Currently, 1.19 feet (the intermediate rise in the sea level) were added to the FEMA SWFL stillwater elevations to account for the SLR anticipated for the year 2018 to the year 2079. If the predicted rate of SLR changes (increases), the wall systems could also be modified with parapet walls or additional wave baffles pending design

analyses to support additional height. If applicable, additional pump station capacity could be added to handle additional overtopping and interior drainage from precipitation.

CHAPTER 4 WAVE DATA, MODELING, AND RESULTS

This chapter will discuss the wave data from the FEMA SWFL study and how the data influenced the significant wave heights chosen to perform the wave overtopping analysis and wave forces on a vertical wall for the different Stillwater elevations.

4.1 FEMA SWFL STUDY WAVE DATA

The FEMA SWFL Study modeling effort, produced not only computed Stillwater elevations for different frequencies (see Chapter 2 and Chapter 3 of this sub-appendix), but significant wave heights (ARI significant wave heights) for each storm frequency as well. The FEMA SWFL numerical modeling study produced nearshore wind, wave and water level estimates and the associated marginal and joint probabilities. Data (storms, waves, tides, etc.) was collected from many resources. Once storms were selected and the necessary data input into the ADCIRC model was used to simulate the surge and circulation response to the storms; and SWAN was used to provide the nearshore wave conditions including local wind generated waves. ADCIRC is a system of computer programs for solving time dependent, free surface circulation and transport problems in two and three dimensions. This model utilizes the finite element method in space allowing the use of highly flexible, unstructured grids. Typical ADCIRC applications have included:

- prediction of storm surge and flooding
- modeling tides and wind driven circulation
- larval transport studies
- near shore marine operations
- dredging feasibility and material disposal studies

The SWAN model runs on the same triangulated mesh that is used with the ADCIRC model. During the model simulations, the water levels from ADCIRC are fed into the SWAN model at 15-minute interval (of model time). The SWAN model computes the wind-driven development of the storm wants, the propagation of the waves over the model domain, and the wave radiation stress gradients where the waves break close to the shore.

Table 4.1 and Table 4.2 show the FEMA SWFL wave data for different save points and beach reaches. Figure 3.5 displays the locations of the save points and a few of the R-monuments along the coast which were used to delineate beach reaches. The Table 4.1 show five frequencies (20-yr AEP flood, 50-yr AEP flood, 100-yr AEP flood, 200-yr AEP, and 500-yr) corresponding to the same water level frequencies analyzed in Section 3.5. Table 4.2 provides a summary of three

frequencies of for interpolated points averaged along the shoreline of the beach reaches (20-yr AEP flood, 50-yr AEP flood, 100-yr AEP flood).

Table 4.1 also displays the calculated SWL -Hs correlation at the save points. Most of the selected save points have a correlation of at least 0.9, signifying that it can be assumed that the SWL AEP correlates to the same Hs AEP, i.e. the 100 YR correlates to the 100 YR Hs. The significance of a save point with a correlation in the 0.70s or 0.80s is that the magnitude of the wave height could be on the conservative side relative to the corresponding SWL AEP. A few of the selected save points have a correlation in the 0.80s. If correlation << 1, it is expected that the magnitudes of the wave height AEP would be less than the corresponding SWL EQP, i.e. for a 50 YR SWL the expected wave would be less than 50 YR(example: Hs = 30 or 40yr, etc.)

Table 4.1 Wave heights and periods for Collier County Save Points

		Wave Heights [feet]					Wave Periods [sec]					
Save Point Number	**Area Description**	**20-YR**	**50-YR**	**100-YR**	**200-YR**	**500-YR**	**20-YR**	**50-YR**	**100-YR**	**200-YR**	**500-YR**	**SWL-HS Correlation**
1	Goodland	2.6	3.4	4.2	4.9	6.0	3.0	3.4	3.6	3.9	4.2	0.93
20	Inside Marco Island	2.1	2.8	3.3	3.9	4.7	2.4	2.6	2.8	3.0	3.2	0.82
30	Offshore Marco Island	9.3	10.4	11.1	11.8	12.7	11.9	13.4	14.2	14.9	15.6	0.86
44	Isles of Capri	2.3	3.0	3.5	4.1	4.8	2.7	3.7	6.6	10.9	11.7	0.90
66	Gordon Pass Inlet	4.9	5.8	6.5	7.3	8.4	12.4	13.9	14.9	15.7	16.7	0.91
68	Inside Gordon Pass (South)	2.2	2.8	3.2	3.7	4.5	2.6	2.8	3.0	3.1	3.3	0.75
104	Doctors Pass Inlet	9.8	11.1	12.0	12.8	13.9	12.4	13.9	14.7	15.4	16.2	0.88
108	Inside Doctors Pass (North)	2.5	3.2	3.7	4.3	5.4	2.7	2.9	3.1	3.2	3.5	0.88
121	Seagate Dr.	2.1	2.7	3.1	3.6	4.6	2.4	2.7	2.9	3.0	3.3	0.92
143	Inside Clam Pass	1.6	2.4	3.3	4.4	6.2	2.2	3.0	8.9	13.9	16.3	0.99
146	Offshore North County	7.9	9.2	10.2	11.0	12.2	12.8	14.2	15.0	15.7	16.6	0.93
169	Wiggins Pass Inlet	4.9	6.0	6.8	7.6	9.1	13.1	14.7	15.7	16.5	17.4	0.98
192	Bonita Beach Rd	2.0	2.8	3.5	4.5	6.5	2.5	2.9	3.1	3.4	3.9	0.97
209	Tamaimi Trail	1.8	2.4	2.8	3.3	4.0	2.3	2.6	2.7	2.9	3.2	0.82

Table 4.2 Wave heights and periods for Collier County Beach Reaches

		Wave Heights [feet]			Wave Periods [sec]		
Reach		20-YR	50-YR	100-YR	20-YR	50-YR	100-YR
1	Barefoot Beach (R1-R9)	4.9	5.9	6.7	6.3	7.9	11.0
2	Barefoot Beach Preserve	5.5	6.5	7.2	9.1	10.2	11.0
3	Wiggins Pass State Park (R17-	6.3	7.4	8.2	9.5	10.6	11.5
4	Vanderbilt Beach	6.9	8.0	8.8	9.1	10.1	10.8
5	Pelican Bay (R29- R41)	6.8	8.0	8.9	11.2	12.5	13.9
6	Clam Pass State Park (R42-R46)	6.1	7.3	8.1	10.6	11.8	12.6
7	Park Shore (R46- R57)	5.8	6.9	7.5	8.5	9.9	12.1
8	Naples Beach (R58A - R79)	5.6	6.5	7.1	7.2	8.3	9.3
9	Gordon Pass Reach	7.0	8.0	8.7	9.9	11.2	12.1
10	Marco Island Beach (R135-	6.7	7.6	8.3	8.9	10.0	10.7
11	Cape Marco (R148- G-4)	5.7	6.6	7.3	10.7	11.9	12.7

CHAPTER 5 WAVE OVERTOPPING ANALYSIS

There are two types of overtopping: Flood Overtopping and Wave Overtopping. Flood Overtopping is when a continuous flow of a pool elevation or river elevation exceeds the low portions of a levee and floodwall. For overtopping by waves (or Wave Overtopping), the Stillwater elevation approaches but does not exceed the low point in the elevation profile. Instead, waves driven by wind produce waves that run-up and overtop the top of a levee or floodwall. The wave action can form an equivalent discharge per a linear distance of the structure and can lead to the erosion, potential failure of the structure and can create ponding areas on the land-side of a project alignment if pump stations are not considered. Waves are influenced by wind speed, wind direction, bathymetry, open water distance, and embankment slopes. Wave overtopping of berms/levees and vertical walls are of concerned for coastal areas, which is why it is being calculated for Collier County. The locations of the proposed structures which might experience wave overtopping are shown in Figure 5.1 (see the main report and Plan Formulation sections for more information regarding locations of proposed structures).

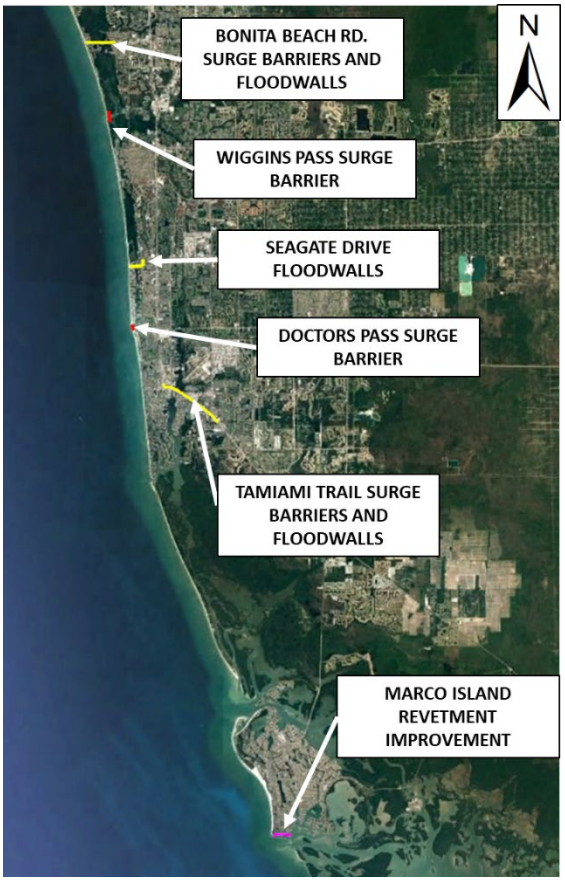

Figure 5.1 Locations of proposed structures for overtopping analysis

Note that while the overtopping was analyzed at all the locations in the figure, not all structures may be in the final Tentatively Selected Plan (TSP) and/or Locally Preferred Plan (LPP). Refer to the main report for more information regarding final structures in the TSP and/or LPP.

Wave overtopping was analyzed using the FEMA SWFL stillwater levels and wave heights were analyzed and chosen from existing wave data. The analysis includes the development of overtopping rates for the return periods 5% flood, 2%, and 1% flood (20 year, 50 year, and 100 year) at stillwater levels calculated for the year 2030 water levels (start of the project economic period of analysis) and for the year 2079 (end of the project economic period of analysis), which vary slightly per structure location within the County. The comparison of different methods for overtopping computation show that the choice of method is not highly influential on the design. The wave heights from existing data (mentioned in Chapter 4 of this sub-appendix) varied per storm and duration of the storm, however, the average height per stillwater elevation was used as the deep-water significant wave height (H_o) for the overtopping analysis for each storm frequency. The height and elevation of the structural measures were determined by first assuming that the top elevation of the structural measures equal to the stillwater elevations then analyzing the wave overtopping. The final elevations shown in the summary tables in this chapter were the height of the structural measures that allowed for minimum wave overtopping throughout the economic period of analysis of the project.

The risk-reducing capability of the Collier County CSRM project during hurricanes, tropical storms and northeasters is dependent upon the barriers and floodwalls ability to resist against wave overtopping flow rates. Waves breaking may result in water splashing over the berm/levee crest or top of the structural measures onto the landward side of the protection when the Stillwater surface elevation is lower than the crest elevation of the barrier or floodwall. These wave overtopping rates have the potential of causing scour and possibly failure of the landside of the structural measures. The overtopping analysis, for the designed vertical wall and barriers, used the interactive computer-based design and analysis system, ACES (which is based on equations found in the Corps' of Engineers Coastal Engineering Manual (CEM)) and EurOtop (which is based off equations that can be found in the EurOtop Overtopping Manual (2018)) were utilized for comparison. The EurOtop (which stands for the European Overtopping) Overtopping Manual was developed by a company named HR Wallingford out of the Netherlands and Germany. EurOtop Overtopping Manual (2018) incorporates new techniques to predict wave overtopping at seawalls, flood embankments, breakwaters and other shoreline structures facing waves and uses both the Probabilistic and Deterministic approaches to analyze the overtopping for the design of the vertical wall and levee.

5.1 DETERMINISTIC VERSUS PROBABLISITIC APPROACH

As mentioned in the previous section, the EurOtop (2018) method used both a deterministic and probabilistic approaches to analyze the wave overtopping rates for the design of the vertical wall and levee. Design conditions for major coastal and flood protection projects are often vague and design parameters contain large uncertainties. Imposed forces, as well as the strengths and interactions of the various components are usually not clearly understood and the design process itself is ill defined. In the past, designs were strictly based on deterministic expressions. A deterministic model is one in which every set of variable states is uniquely determined by parameters in the model and by sets of previous states of these variables. Therefore, deterministic models perform the same way for a given set of initial conditions. More recently, probabilistic design methods have been introduced, in which randomness is present and variable states are not described by unique values, but rather by probability distributions. Both approaches are typically compared.

5.2 OVERTOPPING FLOODWALL ANALYSIS

The overtopping rates were calculated for the project flood wall using the overtopping formulations provided in ACES software and the EurOtop methods.

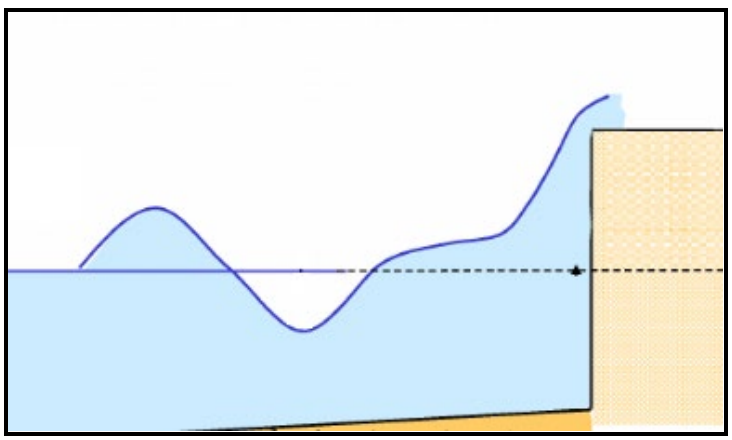

Figure 5.2. Image Representing Wave Overtopping of a Vertical Wall.

The equations, formulations used, and results from each method are shown and explained throughout this section.

5.2.1 ACES Software

ACES is an interactive computer-based design and analysis system in the field of coastal engineering containing six functional areas: wave prediction, wave theory, wave transformation, structural design, wave run-up, and littoral processes. For the purpose of this

analysis ACES was used to calculate wave-overtopping for the project flood wall conditions. Below (Figure 5.3) is an image of the ACES interactive interface for solving for wave-overtopping:

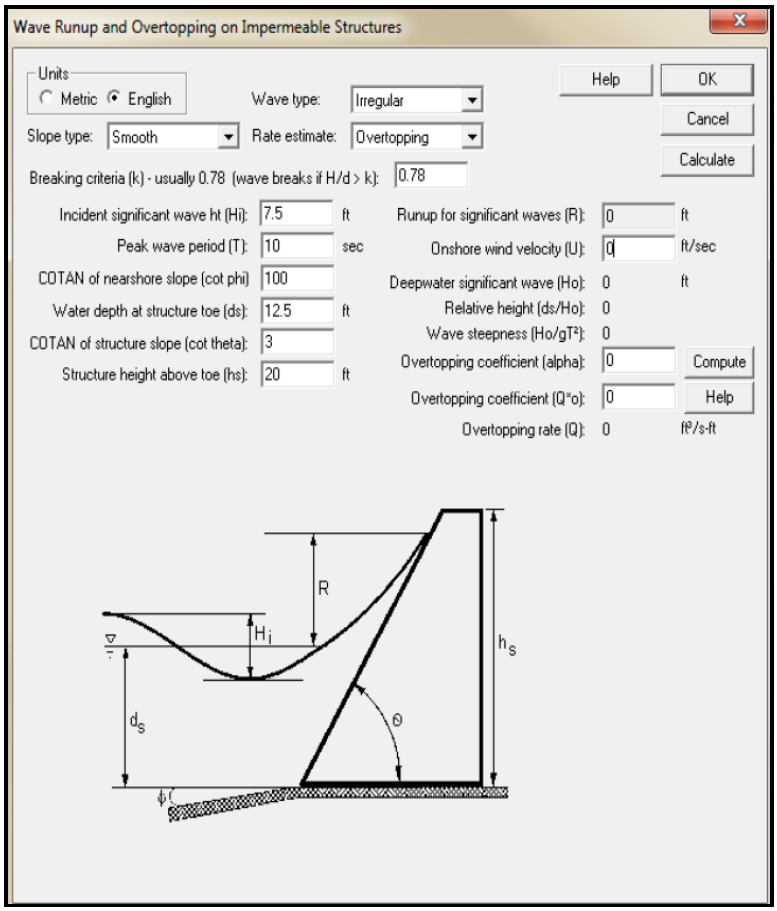

Figure 5.3 ACES interface.

Note: Values shown in the interface were not used in this analysis.

The incident significant wave height (H_i), peak wave period (T), COTAN of nearshore slope (cot phi), water depth at the structure toe (d_s), COTAN of structure slope (cot theta), structure height above toe (h_s), and onshore wind velocity (U) (which we will assume to be 80 ft/sec for all calculations) are input into the ACES interface. The Overtopping coefficient (alpha) is computed in ACES based off of the COTAN of structure slope value. The Run-up for significant waves (R), Deepwater significant wave (Ho), Relative height (d_s/H_o), and the Wave steepness (Ho/gT2) are all calculated from the equations programmed in ACES. The Overtopping Coefficient (Q^*_o) can be found by using Figures 7-24, in the Shore Protection

Manual (SPM). Results are shown in Section 4.2.3 Individual Model Results of Floodwall Overtopping Analysis.

5.2.2 EurOtop

The overtopping rates were also analyzed using EurOtop (2018). Below (Figure 5.4) is an image of the deterministic and probabilistic equations used in calculating the wave overtopping.

Determinitstic Equations - EurOtop (2018)

$$\frac{q}{\sqrt{gH_{m0}^3}} = \frac{0.023}{\sqrt{tan\alpha}}\gamma_b\xi_{m-1,0}exp\left[-2.7\left(\frac{R_C}{\xi_{m-1,0}H_{m0}\gamma_b\gamma_f\gamma_\beta\gamma_v}\right)^{1.3}\right]$$

$$\frac{q}{\sqrt{gH_{m0}^3}} \leq 0.09exp\left[-1.5\left(\frac{R_C}{H_{m0}\gamma_f\gamma_\beta\gamma *}\right)^{1.3}\right]$$

Wave overtopping for short-crested waves

$$\gamma_\beta = 1.0 - 0.0033\,|\beta|\ \ for\ 0° \leq \beta \leq 80°$$

$$\gamma_\beta = 0.736\ \ for\ |\beta| > 80°$$

Probabilistic Equations - EurOtop (2018)

$$\frac{q}{\sqrt{gH_{m0}^3}} = \frac{0.026}{\sqrt{tan\alpha}}\gamma_b\xi_{m-1,0}exp\left[-2.9\left(\frac{R_C}{\xi_{m-1,0}H_{m0}\gamma_b\gamma_f\gamma_\beta\gamma_v}\right)^{1.3}\right]$$

$$\frac{q}{\sqrt{gH_{m0}^3}} \leq 0.1035exp\left[-1.65\left(\frac{R_C}{H_{m0}\gamma_f\gamma_\beta\gamma *}\right)^{1.3}\right]$$

Figure 5.4 Equations used in the EurOtop (2018) method.

The Wave Height, Wave Period, Total Depth at Structure, bottom slope, the Roughness Influence Factor, Acceleration of Gravity, Wave Obliquity, and the Breaker Ratio for breaking waves are all factors that are inputted in the EurOtop calculation of the wave

overtopping. Overtopping Rates and Run-up for significant waves were computed. Results are shown in Section 5.2.3 Individual Model Results of Floodwall Overtopping Analysis.

5.2.3 Individual Model Results of Floodwall Overtopping Analysis

Table 5.1 to Table 5.10 compare the results of each method used to calculate overtopping rates for the structural measures for the periods 5%, 2% flood and 1% flood (20 year, 50 year, and 100 year) at stillwater levels calculated for the year 2030 water levels (start of the project economic period of analysis) and for the year 2079 (end of the project economic period of analysis). The 1% (10YR) was also evaluated for the Surge Barriers at Wiggins Pass and Doctors Pass as these structures as subject to the largest waves and a 100 YR level of protection may not be feasible. After analyzing the estimated structure heights to protect against different storm levels, a reverse analysis was performed to evaluate the estimated protection levels of set elevations for structures (10, 12, and 14 FT NAVD 88). The set elevations correspond to existing elevations in the area which the structures will be able to tie in to as well as elevations being evaluated for beach dune heights.

For most of the structures, the wave data presented in Table 4.1 were used as the inputs into ACES and the EurOtop spreadsheets, excluding Doctors Pass where an interpolation was performed between save points located offshore the channel and further inside Doctors Pass. Attachment HH&C-1 at the end of this sub-appendix shows output tables (from ACES) and EurOtop spreadsheets, which also display all input parameters and calculated solutions for both methods.

Table 5.1 Overtopping Analysis of Gate and Floodwall for Bonita Beach Rd (in feet).

		Bonita Beach Rd. Gate and Floodwall				
		2030 w/ SLR				
% Flood	Return Period [YR]	Water Level [FT NAVD88]	Height of Wall [FT NAVD88]	ACES (ft3/s/ft)	EurOtop Deterministic (ft3/s/ft)	EurOtop Probabilistic (ft3/s/ft)
5%	20	6	8.5	0.008	0.1097	0.0706
3.3%	30	7.1	10	0.014	0.1614	0.1054
2%	50	7.8	11.5	0.004	0.1498	0.0941
1.5%	65	8.4	12	0.012	0.2306	0.1511
1%	100	9.4	14	0.015	0.2135	0.1343
		2079 w/ SLR				
% Flood	Return Period [YR]	Water Level [FT NAVD88]	Height of Wall [FT NAVD88]	ACES (ft3/s/ft)	EurOtop Deterministic (ft3/s/ft)	EurOtop Probabilistic (ft3/s/ft)
5%	20	7	8.5	0.094	0.4233	0.325
3.3%	30	8.1	10	0.104	0.4973	0.3762
2%	50	8.8	11.5	0.059	0.3931	0.2799
1.5%	65	9.4	12	0.069	0.5675	0.4182
1%	100	10.4	14	0.061	0.4613	0.3214

Table 5.2 Overtopping Analysis of Gate and Floodwall for Bonita Beach Rd (in meters).

		Overtopping Analysis of Floodwall				
		Bonita Beach Rd. Gate and Floodwall				
		2030 w/ SLR				
% Flood	Return Period [YR]	Water Level [FT NAVD88]	Height of Wall [FT NAVD88]	ACES (liters/s/m)	EurOtop Deterministic (liters/s/m)	EurOtop Probabilistic (liters/s/m)
5%	20	6	8.5	0.744	10.2021	6.5658
3.3%	30	7.1	10	1.293	15.0102	9.8022
2%	50	7.8	11.5	0.398	13.9314	8.7513
1.5%	65	8.4	12	1.070	21.4458	14.0523
1%	100	9.4	14	1.356	19.8555	12.4899
		2079 w/ SLR				
% Flood	Return Period [YR]	Water Level [FT NAVD88]	Height of Wall [FT NAVD88]	ACES (liters/s/m)	EurOtop Deterministic (liters/s/m)	EurOtop Probabilistic (liters/s/m)
5%	20	7	8.5	8.763	39.3669	30.225
3.3%	30	8.1	10	9.671	46.2489	34.9866
2%	50	8.8	11.5	5.490	36.5583	26.0307
1.5%	65	9.4	12	6.424	52.7775	38.8926
1%	100	10.4	14	5.663	42.9009	29.8902

Table 5.3 Overtopping Analysis of Barrier and Floodwall for Wiggins Pass (in feet).

		Overtopping Analysis of Floodwall				
		Wiggins Pass Barrier and Floodwall				
		2030 w/ SLR				
% Flood	Return Period [YR]	Water Level [FT NAVD88]	Height of Wall [FT NAVD88]	ACES (ft3/s/ft)	EurOtop Deterministic (ft3/s/ft)	EurOtop Probabilistic (ft3/s/ft)
16.7%	6	3.5	10	0.003	0.0169	0.0079
11.1%	9	4.3	12	0.015	0.0597	0.0311
10%	10	4.6	12.5	0.012	0.0517	0.0262
6.7%	15	5.4	14	0.026	0.0718	0.0371
5%	20	6.1	16	0.015	0.0525	0.0258
2%	50	8.2	21	0.019	0.0524	0.0247
1%	100	9.8	25	0.018	0.048	0.0219
		2079 w/ SLR				
% Flood	Return Period [YR]	Water Level [FT NAVD88]	Height of Wall [FT NAVD88]	ACES (ft3/s/ft)	EurOtop Deterministic (ft3/s/ft)	EurOtop Probabilistic (ft3/s/ft)
16.7%	6	4.5	10	0.015	0.0417	0.0219
11.1%	9	5.31	12	0.042	0.1193	0.0681
10%	10	5.6	12.5	0.032	0.1	0.0553
6.7%	15	6.41	14	0.055	0.1291	0.0721
5%	20	7.1	16	0.031	0.0911	0.048
2%	50	9.2	21	0.030	0.0822	0.0411
1%	100	10.9	25	0.026	0.0715	0.0342

Table 5.4 Overtopping Analysis of Barrier and Floodwall for Wiggins Pass (in meters).

		Overtopping Analysis of Floodwall				
		Wiggins Pass Barrier and Floodwall				
		2030 w/ SLR				
% Flood	Return Period [YR]	Water Level [FT NAVD88]	Height of Wall [FT NAVD88]	ACES (liters/s/m)	EurOtop Deterministic (liters/s/m)	EurOtop Probabilistic (liters/s/m)
16.7%	6	3.5	10	0.307	1.5717	0.7347
11.1%	9	4.3	12	1.395	5.5521	2.8923
10%	10	4.6	12.5	1.141	4.8081	2.4366
6.7%	15	5.4	14	2.439	6.6774	3.4503
5%	20	6.1	16	1.429	4.8825	2.3994
2%	50	8.2	21	1.739	4.8732	2.2971
1%	100	9.8	25	1.670	4.464	2.0367
		2079 w/ SLR				
% Flood	Return Period [YR]	Water Level [FT NAVD88]	Height of Wall [FT NAVD88]	ACES (liters/s/m)	EurOtop Deterministic (liters/s/m)	EurOtop Probabilistic (liters/s/m)
16.7%	6	4.5	10	1.428	3.8781	2.0367
11.1%	9	5.31	12	3.929	11.0949	6.3333
10%	10	5.6	12.5	2.947	9.3	5.1429
6.7%	15	6.41	14	5.120	12.0063	6.7053
5%	20	7.1	16	2.855	8.4723	4.464
2%	50	9.2	21	2.799	7.6446	3.8223
1%	100	10.9	25	2.464	6.6495	3.1806

Table 5.5 Overtopping Analysis of Gate and Floodwall for Seagate Dr (in feet).

		Overtopping Analysis of Floodwall				
		Seagate Dr Floodwall				
		2030 w/ SLR				
% Flood	Return Period [YR]	Water Level [FT NAVD88]	Height of Wall [FT NAVD88]	ACES (ft3/s/ft)	EurOtop Deterministic (ft3/s/ft)	EurOtop Probabilistic (ft3/s/ft)
5%	20	6.6	9	0.006	0.098	0.0628
3.3%	30	7.7	10	0.025	0.2199	0.1521
2%	50	8.8	11.5	0.018	0.2021	0.136
1.7%	60	9.1	12	0.019	0.2141	0.1432
1%	100	10.2	14	0.010	0.1627	0.1025
		2079 w/ SLR				
% Flood	Return Period [YR]	Water Level [FT NAVD88]	Height of Wall [FT NAVD88]	ACES (ft3/s/ft)	EurOtop Deterministic (ft3/s/ft)	EurOtop Probabilistic (ft3/s/ft)
5%	20	8	9	0.087	0.4062	0.3133
3.3%	30	9	10	0.205	0.7506	0.6095
2%	50	10	11.5	0.141	0.6228	0.4852
1.7%	60	10	12	0.132	0.6176	0.4750
1%	100	11	14	0.057	0.413	0.2939

Table 5.6 Overtopping Analysis of Gate and Floodwall for Seagate Dr (in meters).

		Overtopping Analysis of Floodwall				
		Seagate Dr Floodwall				
		2030 w/ SLR				
% Flood	Return Period [YR]	Water Level [FT NAVD88]	Height of Wall [FT NAVD88]	ACES (liters/s/m)	EurOtop Deterministic (liters/s/m)	EurOtop Probabilistic (liters/s/m)
5%	20	6.6	9	0.590	9.114	5.8404
3.3%	30	7.7	10	2.303	20.4507	14.1453
2%	50	8.8	11.5	1.703	18.7953	12.648
1.7%	60	9.1	12	1.758	19.9113	13.3176
1%	100	10.2	14	0.930	15.1311	9.5325
		2079 w/ SLR				
% Flood	Return Period [YR]	Water Level [FT NAVD88]	Height of Wall [FT NAVD88]	ACES (liters/s/m)	EurOtop Deterministic (liters/s/m)	EurOtop Probabilistic (liters/s/m)
5%	20	8	9	8.054	37.7766	29.1369
3.3%	30	9	10	19.037	69.8058	56.6835
2%	50	10	11.5	13.069	57.9204	45.1236
1.7%	60	10	12	12.244	57.4368	44.1750
1%	100	11	14	5.255	38.409	27.3327

Table 5.7 Overtopping Analysis of Barrier and Floodwall for Doctors Pass (in feet).

		Overtopping Analysis of Floodwall				
		Doctors Pass Surge Barrier (interpolated wave)				
		2030 w/ SLR				
% Flood	Return Period [YR]	Water Level [FT NAVD88]	Height of Wall [FT NAVD88]	ACES (ft3/s/ft)	EurOtop Deterministic (ft3/s/ft)	EurOtop Probabilistic (ft3/s/ft)
11.1%	9	4.2	10	0.018	0.2343	0.1441
10%	10	4.3	10.5	0.014	0.2059	0.1239
6.7%	15	5.15	12	0.012	0.2065	0.1227
5%	20	5.8	13	0.016	0.2326	0.1386
4%	25	6.3	14	0.014	0.2214	0.1301
2%	50	7.9	17	0.018	0.2523	0.1465
1%	100	9.2	23.5	0.016	0.0553	0.0258
		2079 w/ SLR				
% Flood	Return Period [YR]	Water Level [FT NAVD88]	Height of Wall [FT NAVD88]	ACES (ft3/s/ft)	EurOtop Deterministic (ft3/s/ft)	EurOtop Probabilistic (ft3/s/ft)
11.1%	9	5.2	10	0.053	0.4458	0.2981
10%	10	5.4	10.5	0.045	0.386	0.2521
6.7%	15	6.16	12	0.034	0.3715	0.2383
5%	20	6.8	13	0.043	0.4036	0.2584
4%	25	7.31	14	0.036	0.376	0.2367
2%	50	8.9	17	0.038	0.3988	0.2459
1%	100	10.3	23.5	0.026	0.0867	0.0429

Table 5.8 Overtopping Analysis of Barrier and Floodwall for Doctors Pass (in meters).

		Overtopping Analysis of Floodwall				
		Doctors Pass Surge Barrier (interpolated wave)				
		2030 w/ SLR				
% Flood	Return Period [YR]	Water Level [FT NAVD88]	Height of Wall [FT NAVD88]	ACES (liters/s/m)	EurOtop Deterministic (liters/s/m)	EurOtop Probabilistic (liters/s/m)
11.1%	9	4.2	10	1.646	21.7899	13.4013
10%	10	4.3	10.5	1.256	19.1487	11.5227
6.7%	15	5.15	12	1.078	19.2045	11.4111
5%	20	5.8	13	1.522	21.6318	12.8898
4%	25	6.3	14	1.319	20.5902	12.0993
2%	50	7.9	17	1.670	23.4639	13.6245
1%	100	9.2	23.5	1.500	5.1429	2.3994
		2079 w/ SLR				
% Flood	Return Period [YR]	Water Level [FT NAVD88]	Height of Wall [FT NAVD88]	ACES (liters/s/m)	EurOtop Deterministic (liters/s/m)	EurOtop Probabilistic (liters/s/m)
11.1%	9	5.2	10	4.963	41.4594	27.7233
10%	10	5.4	10.5	4.142	35.898	23.4453
6.7%	15	6.16	12	3.126	34.5495	22.1619
5%	20	6.8	13	3.962	37.5348	24.0312
4%	25	7.31	14	3.336	34.968	22.0131
2%	50	8.9	17	3.543	37.0884	22.8687
1%	100	10.3	23.5	2.450	8.0631	3.9897

Table 5.9 Overtopping Analysis of Gate and Floodwall for Tamiami Trail(in feet).

		Overtopping Analysis of Floodwall				
		Tamiami Trail Gate & Floodwalls				
		2030 w/ SLR				
% Flood	Return Period [YR]	Water Level [FT NAVD88]	Height of Wall [FT NAVD88]	ACES (ft3/s/ft)	EurOtop Deterministic (ft3/s/ft)	EurOtop Probabilistic (ft3/s/ft)
5.0%	20	5.8	8	0.007	0.1009	0.0656
2.0%	50	7.4	10	0.022	0.1288	0.0817
1.0%	100	8.6	12	0.015	0.2	0.13
0.5%	200	9.8	14	0.014	0.2186	0.1396
		2079 w/ SLR				
% Flood	Return Period [YR]	Water Level [FT NAVD88]	Height of Wall [FT NAVD88]	ACES (ft3/s/ft)	EurOtop Deterministic (ft3/s/ft)	EurOtop Probabilistic (ft3/s/ft)
5.0%	20	6.8	8	0.105	0.4527	0.3579
2.0%	50	8.4	10	0.160	0.397	0.2917
1.0%	100	9.6	12	0.089	0.52	0.3882
0.5%	200	10.8	14	0.067	0.4957	0.3522

Table 5.10 Overtopping Analysis of Gate and Floodwall for Tamiami Trail (in meters).

		Overtopping Analysis of Floodwall				
		Tamiami Trail Gate & Floodwalls				
		2030 w/ SLR				
% Flood	Return Period [YR]	Water Level [FT NAVD88]	Height of Wall [FT NAVD88]	ACES (liters/s/m)	EurOtop Deterministic (liters/s/m)	EurOtop Probabilistic (liters/s/m)
5.0%	20	5.8	8	0.647	9.3837	6.1008
2.0%	50	7.4	10	2.074	11.9784	7.5981
1.0%	100	8.6	12	1.395	18.6	12.09
0.5%	200	9.8	14	1.318	20.3298	12.9828
		2079 w/ SLR				
% Flood	Return Period [YR]	Water Level [FT NAVD88]	Height of Wall [FT NAVD88]	ACES (liters/s/m)	EurOtop Deterministic (liters/s/m)	EurOtop Probabilistic (liters/s/m)
5.0%	20	6.8	8	9.778	42.1011	33.2847
2.0%	50	8.4	10	14.880	36.921	27.1281
1.0%	100	9.6	12	8.266	48.36	36.1026
0.5%	200	10.8	14	6.209	46.1001	32.7546

5.3 OVERTOPPING REVETMENT ANALYSIS

The overtopping rates were calculated for the proposed levee using the overtopping formulations provided in ACES software and the EurOtop methods.

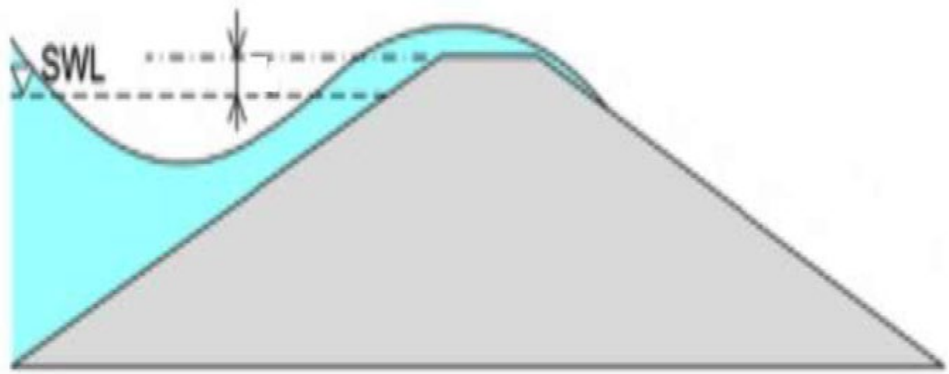

Figure 5.5 Image of Wave Overtopping of a Revetment

The equations, formulations used, and results from each method are shown and explained throughout this section.

5.3.1 ACES Software

The same analysis that was done for the floodwall was used for the revetment; however, there are two primary difference, the appropriate slope (angle) was used for the revetment (assumed COTAN of 2 for this study) and the slope type was assumed to be a "Rough" sloped armored with Riprap instead of smooth. Also, the overtopping coefficient (Q*o) can be found by using Figure 7-28 in the Shore Protection Manual (SPM).

5.3.2 EurOtop

The overtopping topping rates were also analyzed using EurOtop (2018). Figure 5.4 shows an image of the deterministic and probabilistic equations used in calculating the wave overtopping.

5.3.3 Individual Model Results of Revetment Overtopping Analysis

A revetment is currently only being proposed in one area of the Collier County, along the southern shoreline of Marco Island which borders Caxambas Pass. The area has an existing revetment with the crest at approximately 5-6 ft NAVD88. The proposed revetment improvement will increase the crest elevation to protect against inundation and damage from

large coastal storms. An overtopping analysis was performed for the waters levels of this area for the return period 10% flood, 5% flood, 2% flood, and 1% flood (10 year, 20 year, 50 year, and 100 year) at still water levels calculated for the year 2030 water levels (start of the economic period of analysis) and for the year 2079 (end of the project economic period of analysis). Table 5.11 and Table 5.12 summarize these results. Ultimately the revetment at Marco Island was screened out early in the planning process due to the location of revetment and how there was no way to feasibly hydraulically separate the few structures protected by the revetment.

Table 5.11 Overtopping Analysis of Marco Island Revetment (in feet).

		Overtopping Analysis				
		Marco Island Revetment				
		2030 w/ SLR				
% Flood	Return Period [YR]	Water Level [FT NAVD88]	Height of Wall [FT NAVD88]	ACES (ft3/s/ft)	EurOtop Deterministic (ft3/s/ft)	EurOtop Probabilistic (ft3/s/ft)
10%	10	4.6	9	0.3626	0.0821	0.0451
5%	20	5.9	11.5	0.4009	0.089	0.0476
2%	50	7.7	14.5	0.4970	0.1105	0.0586
1%	100	9.2	17.5	0.4273	0.0897	0.0452
		2079 w/ SLR				
% Flood	Return Period [YR]	Water Level [FT NAVD88]	Height of Wall [FT NAVD88]	ACES (ft3/s/ft)	EurOtop Deterministic (ft3/s/ft)	EurOtop Probabilistic (ft3/s/ft)
10%	10	5.6	9	0.843	0.233	0.1467
5%	20	6.9	11.5	0.813	0.2098	0.1254
2%	50	8.7	14.5	0.901	0.2257	0.1315
1%	100	10.2	17.5	0.737	0.1688	0.0924

Table 5.12 Overtopping Analysis of Marco Island Revetment (in meters).

		Overtopping Analysis				
		Marco Island Revetment				
		2030 w/ SLR				
% Flood	Return Period [YR]	Water Level [FT NAVD88]	Height of Wall [FT NAVD88]	ACES (liters/s/m)	EurOtop Deterministic (liters/s/m)	EurOtop Probabilistic (liters/s/m)
10%	10	4.6	9	33.720	7.6353	4.1943
5%	20	5.9	11.5	37.288	8.277	4.4268
2%	50	7.7	14.5	46.222	10.2765	5.4498
1%	100	9.2	17.5	39.737	8.3421	4.2036
		2079 w/ SLR				
% Flood	Return Period [YR]	Water Level [FT NAVD88]	Height of Wall [FT NAVD88]	ACES (liters/s/m)	EurOtop Deterministic (liters/s/m)	EurOtop Probabilistic (liters/s/m)
10%	10	5.6	9	78.38	21.669	13.6431
5%	20	6.9	11.5	75.61	19.5114	11.6622
2%	50	8.7	14.5	83.79	20.9901	12.2295
1%	100	10.2	17.5	68.55	15.6984	8.5932

HH&C-1 at the end of this sub-appendix shows output tables (from CEDAS) and EurOtop spreadsheets, which also display all input parameters for both methods.

5.4 ALLOWABLE OVERTOPPING RATES

To place the overtopping results into context, Table VI-5-6 from the CEM (Table 5.13 in this report) and Table 8.26 from the 2018 EurOtop – Overtopping Manual (Table 5.14 in this report) was used. This table compares the tolerable mean discharges and maximum volumes between EurOtop 2007 and EurOtop 2018. Note that in EurOtop 2018 no guidance is given for paved surfaces in where flow stays on or behind a seawall crest before returning to the sea, which would be case for many of the seawalls proposed in this study as they are in highly urban areas. The inference is that these types of structures are usually heavily paved or capped with concrete in which case overtopping leading to structural damage of the defense is less important than operational use or vulnerability of building and equipment (EurOtop 2018). Based on Table 5.13 and Table 5.14, the overtopping rates for the floodwall, during the start of the project in 2030 for all areas are at the low end, having little to no damage for the heights analyzed in Table 5.1 to Table 5.10. There is no indication that overtopping will be a problem in the start of the project. After the 50-year economic period of analysis of the project (to the year 2079), with the increase of SLR, the ACES results show damage could possibly occur if additional protection is not

added to the crest or additional scour protection on the land side and the EurOtop method results show no damage if crest and rear slope are well protected. This why having floodwalls resilient to overtopping and adaptable to climate change can reduce the risks associated with overtopping events for some flood protection projects. Increasing the height of the structures towards after the end of the project economic period of analysis will need to be considered and analyzed to prevent damage from overtopping after the project economic period of analysis. The EurOtop method produced slightly higher overtopping rates for the walls.

According to Table 5.13 and Table 5.14, allowable overtopping rates for revetments are higher than those for walls before damage will occur. For the Marco Island revetment, the EurOtop overtopping results than the ACES result, but both methods show no damage for the heights analyzed in Table 5.11 and Table 5.12 throughout the proposed project economic life (2030 to 2079).

Overtopping rates are typically included in the interior drainage analysis to account for the additional volume of water added to the interior storage, which could potentially increase the pump station capacity. Refer to CHAPTER 7 of this sub-appendix for a detailed discussion on the interior drainage analysis.

Table 5.13 Allowable Overtopping Rates for ACES values (taken from CEM table VI-5-6).

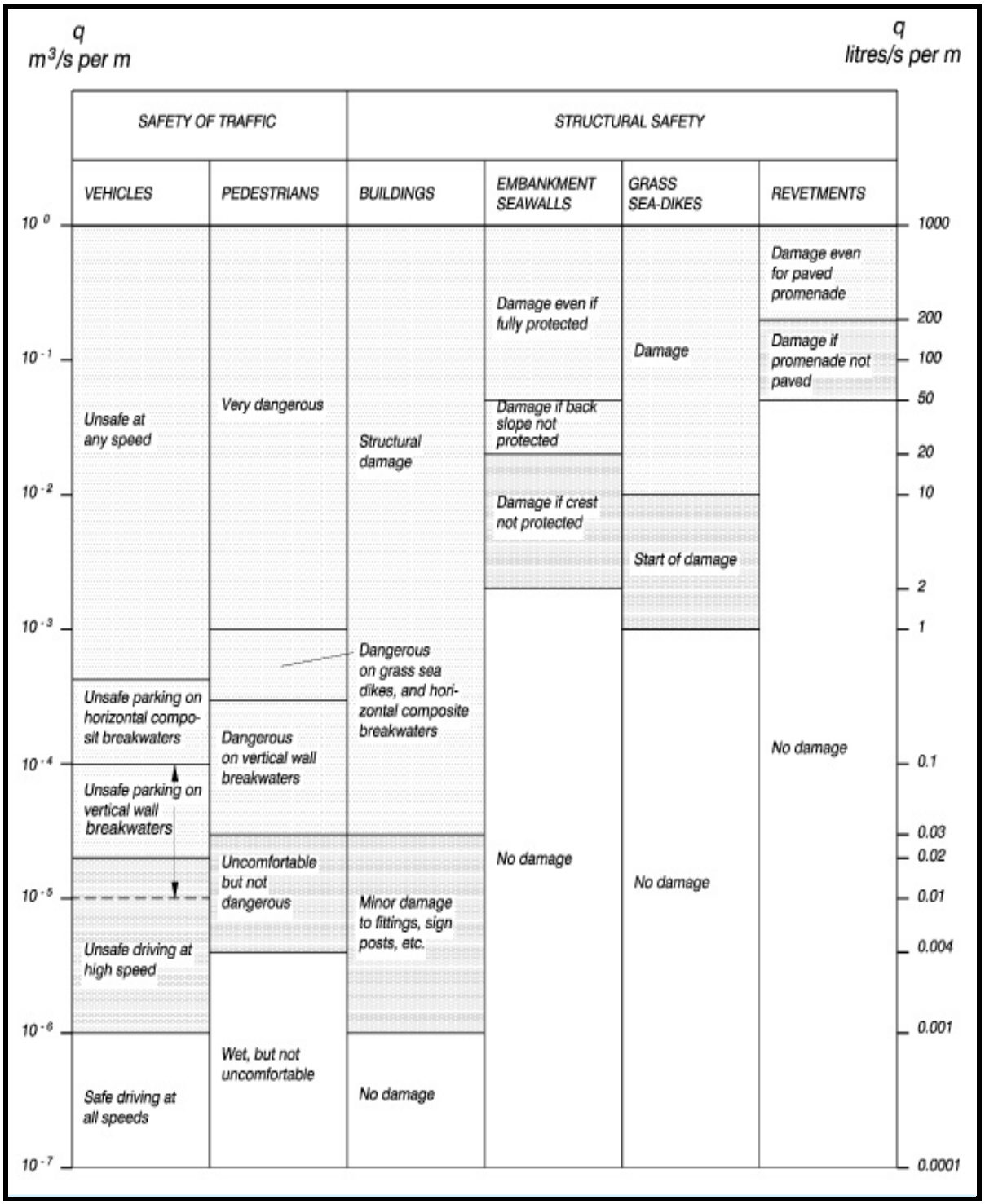

Table 5.14 Allowable Overtopping Rates for EurOtop values (EurOtop 2018 Manual Table 8.26).

Return Period	Tolerable Discharge	Comment	Reference
1 in 1 year	q< 1 l/s per m V_{max}< 600 l/m.	For people and vehicles - People at seawall / dike crest. Clear view of the sea. H_{m0} = 2m.	EurOtop (2018): Table 3.3
1 in 1 year	q< 1-10 l/s per V_{max}< 500 l/m at low level.	Trained staff, well shod and protected, expecting to get wet, overtopping flows at lower levels only, no falling jets, low danger of fall from walkway.	EurOtop (2007): Table 3.2
1 in 200 year	-	No limits given for vertical structures or promenades	EurOtop (2018)
1 in 200 year	q< 200 l/s per m	No damage to paved or armoured promenade behind seawall.	EurOtop (2007): Table 3.5

CHAPTER 6 WAVE FORCES ON A VERTICAL WALL

6.1 CALCULATION OF WAVE FORCES ON A VERTICAL WALL

A characteristic of vertical wall is that the kinetic energy of the wave is stopped suddenly at the wall face. The energy is then reflected or translated by vertical motion of the water along the wall face. The upward component of this can result in the wave crests to rise and/or to double their deep water height (non-breaking case). The downward component causes very high velocities at the base of the wall and horizontally away from the wall for ½ of a wavelength, thus causing erosion and scour. The forces exerted on vertical walls by reflected water waves were calculated for the vertical flood wall proposed for this study. There are two methods that are typically used for calculating wave forces: the Goda method and the Minikin method. The method used for this study to calculate the wave forces on a vertical wall, was Goda method. The Goda method was used because the equations for this method are applicable to nonbreaking and breaking (no distinctions are made between the two), which the Minikin method does not. The formulas give additional force due to the waves to the Stillwater hydrostatic force, which adds to the total forces on the wall. The Goda method assumes trapezoidal shape for pressure distribution along front of a vertical (see Figure 6.1). The pressure at the top of the wall (labeled as P_2), Stillwater surface elevation (labeled as P_1), and toe of wall structure are the forces calculated (P_3).

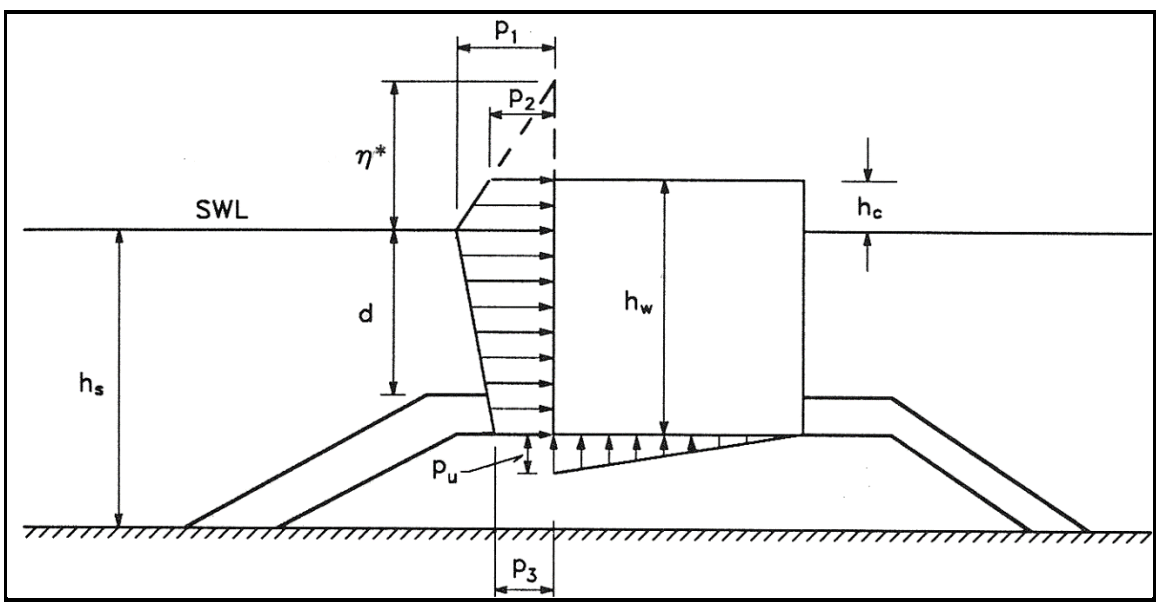

Figure 6.1 Trapezoidal Shape for Pressure Distribution and Definition sketch for Goda formula for wave induced pressure under wave crest on a vertical wall.

The following is an explanation of the Goda Method's equations and input parameters used to calculate wave forces on a vertical wall:

- Elevation to which wave pressure is exerted is calculated by the following equation:
  $\eta* = 0.75(1+ \cos\beta)H_{design}$
  β = direction of waves with respect to breakwater normal (for waves approaching normal to breakwater, $\beta = 0$).
  For the Goda method, a maximum wave height is calculated from the significant wave height (*Hdesign* = 1.8*Hs*). For the calculation of the wave forces, the FEMA SWFL Study calculated waves presented in Table 4.1 were used for the correlating SWL.

- Effect of wave period on pressure distribution ($\alpha 1$):
  $\alpha 1 = 0.6 + 0.5 \left(\frac{2khs}{sinh2khs}\right)^2$
  minimum = 0.6 (deep water), maximum = 1.1 (shallow)

- Increase in wave pressure due to shallow mound ($\alpha 2$):
  $\alpha 2$ = minimum of $\frac{hb-d}{3hb}\left(\frac{Hdesign}{d}\right)^2$ or $\frac{2d}{Hdesign}$

- Linear pressure distribution ($\alpha 3$):
  $\alpha 3 = 1- \frac{hw-hc}{3hs}\left\{1 - \frac{1}{d(cosh)khs}\right\}^2$

- Pressure on Front of Vertical Wall:
  $$p_1 = 0.5(1+\cos\beta)(\alpha_1 + \alpha_* \cos^2\beta)\gamma H_{design}$$
  $$p_2 = \begin{cases} \left(1-\frac{h_c}{\eta*}\right)p_1 & \text{for } \eta* > h_c \\ 0 & \text{for } \eta* \le h_c \end{cases}$$
  $$p_3 = \alpha_3 p_1$$

- Wave Force (Total Horizontal Force to breaking wave):
  $F = 0.5\,(P_1 + P_3)h_c + 0.5(P_1+P_2)(h_w-h_c)$

- Overturning Moment:
  $M = F \times h_c$

Hand calculations of the Goda Forces on a vertical were performed for a wall at 11.5 foot and 13.5 ft NAVD88 at Seagate Drive during a 20 YR storm (Attachment HH&C-2 shown at the end of this sub-appendix), all other Goda forces for other wall heights were calculated thru Microsoft

excel spreadsheet. Table 6.1 and Table 6.2 summarize the wave forces for the different wall heights from Table 5.1 to Table 5.10 calculated in Section 5.2.3 Individual Model Results of Floodwall Overtopping Analysis. Table 6.1 summarizes the results for 5% flood (20 yr.), 2% flood (50 yr.), and 1% flood (100 yr.) stillwater elevations for the year 2079. The 10% (10 yr) still water evaluation was also evaluated for the Wiggins Pass and Doctors Pass Barriers. Table 6.2 summarizes the results for set elevations as each structure locations (10 FT, 12 FT, and 14 FT NAVD88). Note that for the calculation of wave forces on a vertical wall, an average ground elevation at each structure was determined using the elevations from the FEMA SWFL study modeling grid.

The wave forces calculated for this study were provided to the structural and Geotechnical engineers for their analysis and calculation of the total forces on I-walls and T-walls.

Table 6.1 Wave Forces calculated for different wall heights for 10% (10YR), 5% flood (20 yr.), 2% flood (50 yr.), and 1% flood (100 yr.).

		Wave Forces (lb/ft)				Overturning Moment (lb-ft/ft)			
	Elevation of Wall [ft NAVD88]	**10-YR SWL**	**20-YR SWL**	**50-YR SWL**	**100-YR SWL**	**10-YR SWL**	**20-YR SWL**	**50-YR SWL**	**100-YR SWL**
Wiggins Pass Barrier	12.5	8982	11344	14517	16687	86822	114820	151578	176130
	16.0	9354	12281	16246	19019	95133	135971	190736	229014
	21.0	10417	12889	17773	21406	119520	151484	231526	293020
	25.0	11390	14053	18199	22518	144524	181998	244681	327789
Wiggins Pass Walls	12.5	2777	3932	5351	6255	8795	13438	19443	23331
	15.5	3152	4815	6933	8366	12069	21283	33580	42229
	20.5	4178	5410	8645	10963	21620	28427	55353	75502
	24.5	5217	6641	9182	12210	33939	43646	64498	97079
Bonita Beach Gate	8.5		1007	1413	1582		5768	8057	8596
	11.5		1199	1931	2383		7912	13953	17740
	14.0		1324	2176	2864		9508	17409	24555
Bonita Beach Floodwalls	8.5		644	817	798		1112	1486	1239
	11.5		919	1496	1795		2403	4805	6146
	14.0		1100	1818	2393		3522	7250	10741
Seagate Floodwall	9.0		786	836	779		2043	2213	1755
	11.5		1033	1357	1475		3546	5433	6061
	13.5		1106	1637	1897		4120	7793	9628
Doctors Pass Barrier	10.5	7299	8886	11333	14093	66115	82415	106714	131589
	13.0	7807	9708	12668	15891	76103	98587	133029	167049
	17.0	8118	10506	14273	18197	83045	116740	169735	219856
	23.5	9574	11599	15489	20445	116980	144047	203138	282354
Doctors Pass Floodwalls	10.5	2383	3014	3873	4473	5913	7834	10581	12334
	13.0	2999	3964	5355	6357	10011	14185	20527	24986
	17.0	3375	4887	7137	8771	13528	23171	38108	48889
	23.5	5141	6150	8487	11125	31717	38313	57650	83732
Tamiami Trail Gate	8.0		1479	2431	3169		8898	11349	11787
	10.5		1241	2207	2946		11219	16825	19492
	12.0		1154	2072	2812		11852	19228	23409
Tamiami Trail Floodwalls	8.0		439	503	438		539	647	453
	10.5		680	1010	1105		1389	2503	2909
	12.0		740	1207	1404		1687	3621	4618

Table 6.2 Wave Forces calculated for set wall heights (10 FT, 12 FT, and 14 FT NAVD88)

	Elevation of Wall [ft NAVD88]	Wave Forces (lb/ft)	Overturning Moment (lb-ft/ft)
Wiggins Pass Barrier	10.0	6249	53883
	12.0	8142	75835
	14.0	10783	111660
Wiggins Pass Walls	10.0	1610	3551
	12.0	2675	8158
	14.0	4171	16467
Bonita Beach Gate	10.0	1478	9234
	12.0	2246	16288
	14.0	2947	24342
Bonita Beach Floodwalls	10.0	1056	2465
	12.0	1756	5842
	14.0	2463	10520
Seagate Floodwall	10.0	983	2954
	12.0	1409	5699
	14.0	1867	9407
Doctors Pass Barrier	10.0	6327	58905
	12.0	8388	79547
	14.0	10461	108274
Doctors Pass Floodwalls	10.0	2395	6347
	12.0	3510	12209
	14.0	4918	21363
Tamiami Trail Gate	10.0	1654	15881
	12.0	2168	23227
	14.0	2850	33491
Tamiami Trail Floodwalls	10.0	971	2062
	12.0	1469	4548
	14.0	2144	8650

CHAPTER 7 HYDROLOGY AND HYDRAULICS ANALYSIS

The yearly rainfall average is approximately 56 inches. The city has a total area of approximately 2,305 square miles, of which 307 square miles (13%) is water. Collier County is a low-lying densely populated area, which is vulnerable to rising sea levels. The climate in Collier County is a humid tropical climate. August is typically the warmest month (average high of 83 degrees Fahrenheit); January is typically the coldest month (average high of 65 degrees Fahrenheit).

Since the Collier County Coastal Storm Risk Management Tentatively Selected Plan (TSP) has determined tidal barriers and floodwalls were needed to protect against rising tides, the tidal barriers and floodwalls may affect the rainfall runoff peak discharge relief that was naturally occurring. EM 1110-2-1413 references that if the storage, as a result of the tidal barriers, rises behind the level of protection to a level beyond what has occurred naturally, then a relief system will be recommended. That relief system could be a combined collector drain and/or pump station(s) or other suggestions depending on the circumstances. The amount of rainfall in the interior protected area would then be a concern because coincidental flooding from rainfall and tides could occur. Therefore, for the Collier County CSRM pump stations will be evaluated to relief interior drainage. The 100 year event will be looked at for the 24 hour point rainfall peak estimates.

To have an understanding of the magnitude of historical storms that have occurred in the Collier County area, see Table **7.1** which shows the high tide level storm events that have occurred in the area along with the rainfall amounts associated with the event. Some tidal events do not have large amounts of rain accompanying the storm.

There are existing hydrologic and hydraulic (H&H) reports available by the county. Some of these studies are fairly recent, for example, as of April 2019. During the PED (Preliminary Engineering and Design) phase, more analyses can be done in the Project Areas to better define the impacts to the interior drainage caused by the Project alignment chosen. These existing reports will be used as a reference for the discussion in this section.

The reference reports are as follows:

1. Rainfall Characteristics and Peak Water Levels along Primary Canals in Big Cypress Basin (BCB) During Hurricane Irma – Draft 2019
2. Flood Protection Level of Service Provided by Existing District Infrastructure for Current (2015) Sea Level Conditions and Three Future (2065) Sea Level Scenarios for Golden Gate Watershed – Final Report October 2017
3. Atlas Water Control Operations Atlas: Big Cypress Basin System Part 2: Structure Descriptions- Draft April 2019

4. South Florida Water Management District (SFWMD) Water Control Structure Manual Big Cypress Basin- 2011
5. Collier County Comprehensive Watershed Improvement Plan- Draft August 2016
6. SFWMD GIS layers for Watershed Boundaries and Structure Locations - Current

Table 7.1 Historical Storm Events

	Storm Event – Date & Name	Type of Storm	Peak Water Surface Elevations NAVD 88 (in feet)	Rainfall (in inches) *Measured from Naples Airport
1	October 7, 1873	Hurricane	7.5 – 10.5	-
2	September 25, 1894	Hurricane	9.5 – 10.5	-
3	September 1926 (Great Miami Hurricane)	Hurricane	4.7	5
4	August/September 1935 (Great Labor Day Hurricane)	Hurricane	N/A	10
5	October 1944 (No Name)	Hurricane	6	5
6	August/September 1960 (Donna)	Hurricane	10.3	3 - 5
7	October 1964 (Isbell)	Hurricane	N/A	1 - 3
8	August/September 1965 (Betsy)	Hurricane	1.93	1
9	August 1981 (Dennis)	Hurricane	1.54	1 - 3
10	July 1985 (Bob)	Hurricane	1.78	10 - 15
11	August 1992 (Andrew)	Hurricane	1.24	1 - 3
12	March 1993 (“Storm of the Century”)	Superstorm	3.33	1 - 3
13	November 1994 (Gordon)	Hurricane	1.43	3

	Storm Event – Date & Name	Type of Storm	Peak Water Surface Elevations NAVD 88 (in feet)	Rainfall (in inches) *Measured from Naples Airport
14	October/November 1998 (Mitch)	Hurricane	1.48	1.42*
15	September 1992 (Harvey)	Tropical Storm	2.22	10.25*
16	August 2004 (Charley)	Hurricane	No gauge data available	7.48*
17	October 2005 (Wilma)	Hurricane	2.47	6.63*
18	June 2012 (Debby)	Tropical Storm	4.55	1.6*
19	August 2012 (Issac)	Tropical Storm	2.62	1.98*
20	August/September 2017 (Irma)	Hurricane	4.25	11.46*

The following paragraphs discuss the interior drainage possibilities for the number of pumps needed and their size.

7.1 HYDROLOGIC PARAMETERS FOR INTERIOR ANALYSIS

The topographic data (in digital format) was created from points of the SWFL Study's digital elevation model (DEM) in NAVD88 feet. The ArcMap version 10.4.1 software program was used to produce contours based on the SWFL Study's DEM. From these contours, the area of each contour was calculated and used in HEC-HMS (Hydrologic Engineering Center-Hydrologic Modeling Software) to produce Elevation-Area curves.

Clark's T_c (time of concentration) and R (storage coefficient) were utilized in the analysis. R, which represents a storage relationship of the hydrograph, is typically one half of T_c, but can be smaller in steep, mountainous areas or greater (as high as equal to T_c) in flat, swampy areas. In the case of the Collier County, R was increased to 0.9 of T_c to represent the flatness of the watershed and the storage associated with ponding and overland flow (down the streets and

across lawns) when the capacity of the drainage pipes are exceeded. Channel shapes for the longest flow path were assumed.

The soils in Collier County are generally characterized as sand. There are various soil names with the same hydrologic classification of being an A/D soil in the watershed. Group D soils have high runoff potential and drain poorly. Soils can also be listed in group D because of a high water table which creates a drainage problem. Group A soils have low runoff potential and high infiltration rates even when saturated. Since the watershed is well developed, it is considered to be well drained. From the soils info, Curve Numbers (CN) were computed based on the Land Use categories from data retrieved from USGS's National Land Cover Database (NLCD).

The high resolution of a LIDAR in a relatively flat watershed makes it difficult for an exact match of delineation of a watershed using software, HEC-GeoHMS. HEC-HMS also assumes that the rim elevations of the watershed are at a higher elevation and naturally drain to the low spot. For this 10% design, a delineation of the watersheds using HEC-GeoHMS were done. The storm parameters assumed in HEC-HMS was a 50 percent intensity position, 15 minute intensity duration, and a storm duration of 1 day. See Chapter 8 Storm Surge Barrier Closures for the reasoning behind the selection of a one day timeframe.

The HEC-HMS models assembled for this 10% design ran for 1 days to see the effects of the full runoff hydrographs. The 96 inch diameter pump with discharge sizes capable of 287,000 gpm (640 cfs) was used in the HEC-HMS model. For the consideration of the pumps, the initial reservoir elevation will represent the tide level at which to shut the tidal gates which in this case is 2 feet for Wiggins Pass and Tamiami. One foot was used for Doctors Pass based on the DEM. For future with project runs, the initial reservoir elevation will increase by 1 foot to account for sea level rise.

7.1.1 WIGGINS PASS

For Wiggins Pass, an analysis was performed to evaluate the existing conditions. The future without project (FWOP) showed no increase of peak elevation after the 1% storm (100 year). Table 7.2 shows the HEC-HMS reproduced runoff volume and peak for the 100 Year Rainfall/100 Year Surge Condition with and without pumps for year 2030 and 2079. The storm surge barrier with a height of 12 feet and 14 feet were analyzed. Overtopping of the storm surge barrier was also included in the HEC-HMS model.

Table 7.2 HMS Results for Wiggins Pass Reservoir with a 24-hour Closure

Wiggins Pass	Overtopping rate (ft^3/s-ft)	Volume (cfs)	Peak Elevation (feet) with no Pumps	Number of 96 inch pumps	Peak Elevation (feet) With pumps
at 10 feet 2030	21.564	13585.32	9.8	30	3.1
2079	Submerged	-	-	-	-
at 12 feet 2030	10.87	6848.1	8.3	15	3.4
2079	15.45	9733.5	8.9	10	7.1
2079	15.45	9733.5	8.9	20	3.6
at 14 feet 2030	5.18	3263.4	7.4	10	3.0
2079	7.68	4838.4	7.8	10	3.8

Flooding begins to happen when the water levels reach 4 feet NAVD88. Therefore, the pumps were switched on/off at 3 feet. Based on the HMS results and selected TSP height of 12 feet with a 24 hour closure, a storm surge barrier that is 12 feet tall with nineteen (19) 96-inch pumps would provide the most protection to the Wiggins Pass area.

7.1.2 DOCTORS PASS

The future without project (FWOP) showed a 0.1 foot increase of peak elevation after the 1% storm. Table 7.3 shows the HEC-HMS reproduced runoff volume and peak for the 100 Year Rainfall/100 Year Surge Condition with and without pumps for year 2030 and 2079. The storm surge barrier with a height of 10 feet, 12 feet and 14 feet were analyzed. Overtopping of the storm surge barrier was also included in the HEC-HMS model (shown in Table 7.3). Based on the HMS results and selected TSP height of 12 feet, a storm surge barrier that is 12 feet tall with seventeen (17) 96-inch pumps would provide the most protection to the Doctors Pass area.

Table 7.3 Doctors Pass

Doctors Pass	Overtopping rate (ft^3/s-ft)	Q (cfs)	Peak Elevation (feet)	Number of 96 inch pumps	Peak Elevation (feet)

			No Pumps		With pumps
at 10 feet 2030	17.50	4987.5	11.9	10	5.6
2079	-	-	-	-	-
at 12 feet 2030	8.24	2348.4	9.5	10	3.8
2079	12.06	3437.1	10.6	10	4.5
2079	12.06	3437.1	10.6	17	2.6
at 14 feet 2030	3.60	1026	8.2	10	3.2
2079	5.33	1519.05	8.7	10	3.3
2079	5.33	1519.05	8.7	15	2.8

7.1.3 TAMIAMI TRAIL

The future without project (FWOP) did not show an increase of peak elevation after the 1% storm. Table 7.4 shows the HEC-HMS reproduced runoff volume and peak for the 100 Year Rainfall/100 Year Surge Condition with and without pumps for the year 2079. The storm surge barrier with a height of 10 feet, 12 feet and 14 feet were analyzed. Overtopping of the structure was considered for this measure. The overtopping rates are significantly smaller compared to Doctors Pass and Wiggins Pass because the storm surge barrier is inland and not on the Gulf of Mexico. Runoff from the storm event is the major contributing factor to an increase in peak elevation.

Table 7.4 Tamiami Trail

Tamiami Trail	Overtopping rate (ft^3/s-ft)	Q (cfs)	Peak Elevation (feet) No Pumps	Number of 96 inch pumps	Peak Elevation (feet) With pumps
at 10 feet 2030	0.426	127.8	4.9	5	4.7
2079	1.610	483	4.9	5	4.7
at 12 feet 2030	.015	4.5	4.9	5	4.7
2079	.089	26.7	4.9	5	4.7
at 14 feet	0	0	4.9	5	

2030					4.7
2079	.002	0.6	4.9	5	4.7

The South Florida Water Management District (SFWMD) has a control structure above the Naples Airport on the canal called Golden Gate 1. The structure begins to overtop when the water level reaches 4.49 feet NAVD88. Therefore, the pumps were switched on/off at 4 feet. Based on the HMS results in Table 7.4, five (5) 96-inch pumps would provide the most protection to the Tamiami area.

The pumps are only necessary during a high precipitation event that occurs concurrently with a gate closure. The structures on the unprotected side of the Tamiami barriers are part of Planning Area 4, which is a non-structural planning area, however Planning Area 4 is not currently part of the TSP as it was not incrementally justified as a separable element. Therefore, induced flooding due to the addition of pump discharge on the unprotected side of Tamiami should be considered. However, this unprotected area is already low lying and susceptible to flooding from storms which produce 4-5 ft water levels at minimum. Should the pumps be necessary during a storm where the gates are closed, it is likely the unprotected area will already be flooding. In minimize contributing to this flooding, the pump discharge shall be constructed such that the water discharges into a large area of the bay.

7.2 PUMP STATION LOCATIONS

According to Engineering Manual 1110-2-3102, pump stations "should be located or sited in such a manner to produce the most direct inflow possible" and the "location of stations with respect to the project alignment should be selected for safe operation". This section will discuss the potential location of pump stations. There are also two types of pump stations: Floodwater Pumping Stations and Combination Flow Pumping Stations. Floodwater Pumping Stations usually pump directly from open storage ponds, ditches, or Stormwater sewers. Combination Flow Pumping Stations are stations that consist of some combination of Stormwater domestic and industrial wastes and are characterized by having to pump runoff containing undiluted waste. The Collier County CSRM pumps will be used Floodwater Pumping stations to pump out Stormwater that may accumulated due the location of the project alignment; therefore, Floodwater Pumping Stations will be considered. Figure 7.1 and Figure 7.2 below should potential locations for pump stations near Wiggins Pass and the Tamiami Trail.

Figure 7.1 Potential spot for pump station at Wiggins Pass

Figure 7.2 Potential Spot for a pump station on the Gordon River

7.3 INTERIOR DRAINAGE OVERVIEW

It is apparent by a preliminary HEC-HMS analysis, that pumps and pump stations or some method of interior drainage relief would lessen the duration of inundation. The proposed tide gates would have a more defined closure guide as a more detailed H&H analysis is done. It is

suspected that the closures should occur at or below mean tide levels occurring at the NOAA Naples tide gauge.

It is also suggested to have permanent staff gauges at each of the inlets that are proposing tide gates. The staff gauge could be a recording gauge. The disadvantage could be the costs to maintain such a gauge. The advantage of having recording gauges would afford the opportunity to have calibrated models.

It is important to note that the computer modeling results presented at this 10% design phase are highly dependent upon the validity of the data provided. However, the engineering assumptions have been made to align with previous reports.

7.4 HEC-RAS RESULTS

Another analysis was conducted in HEC-RAS (River Analysis System) to see the effects on storm surge before and after the placement of the structures and beach nourishment. The blue color symbolizes the FWOP water levels; the green/ yellow shows the future with project water levels. This HEC-RAS run only models stillwater and does not include precipitation or waves. The pink lines denote the storm surge barrier/wall and beach dune at a height of 12 feet. The boundary conditions were created from the peak elevation for the 100 year event from the FEMA SWFL study and the average hydrograph shape from previous historical storms. See Figure 7.3 to Figure 7.6 to see the reduction in flooding provided by the structural measures.

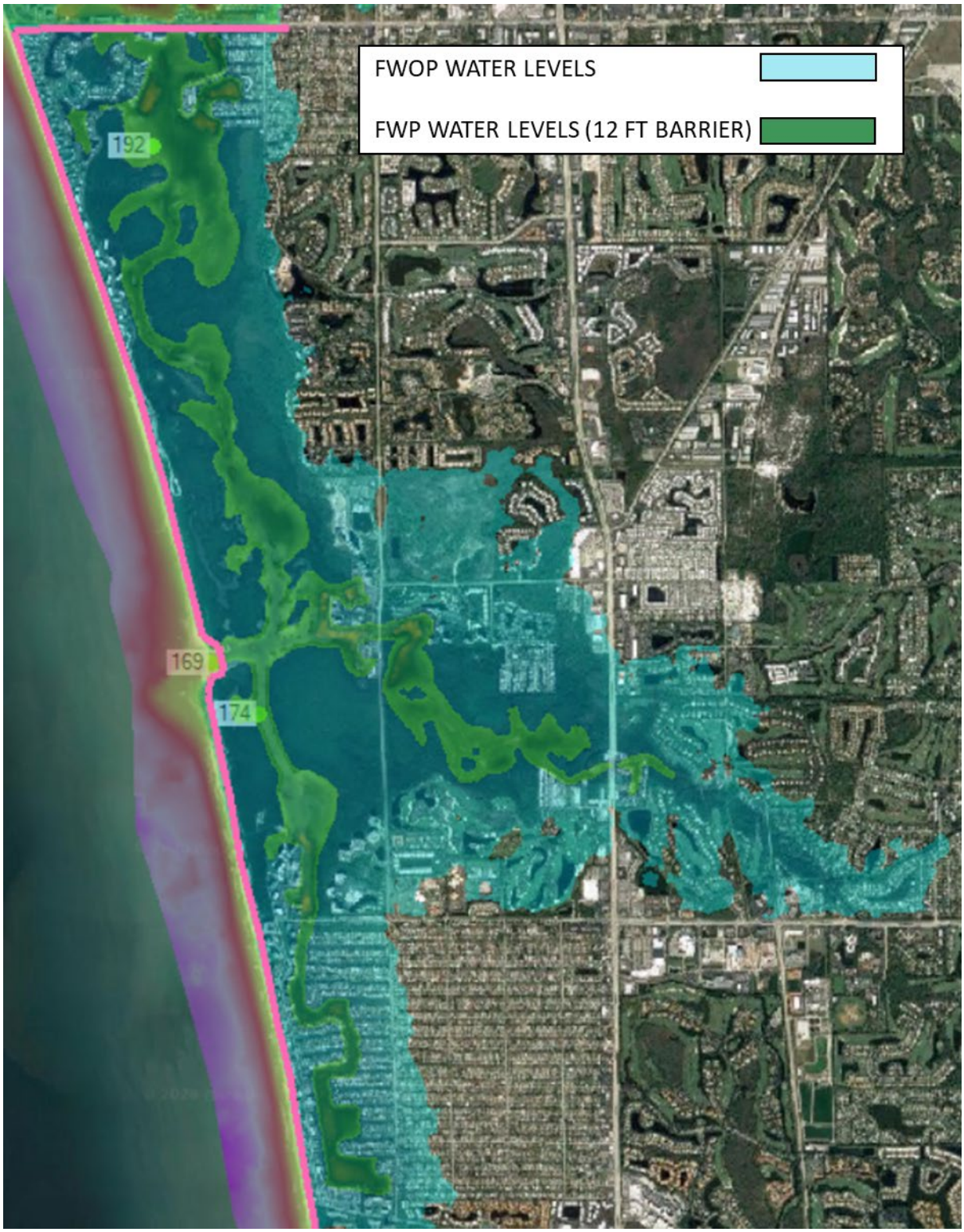

Figure 7.3 HEC-RAS Results-Wiggins Pass

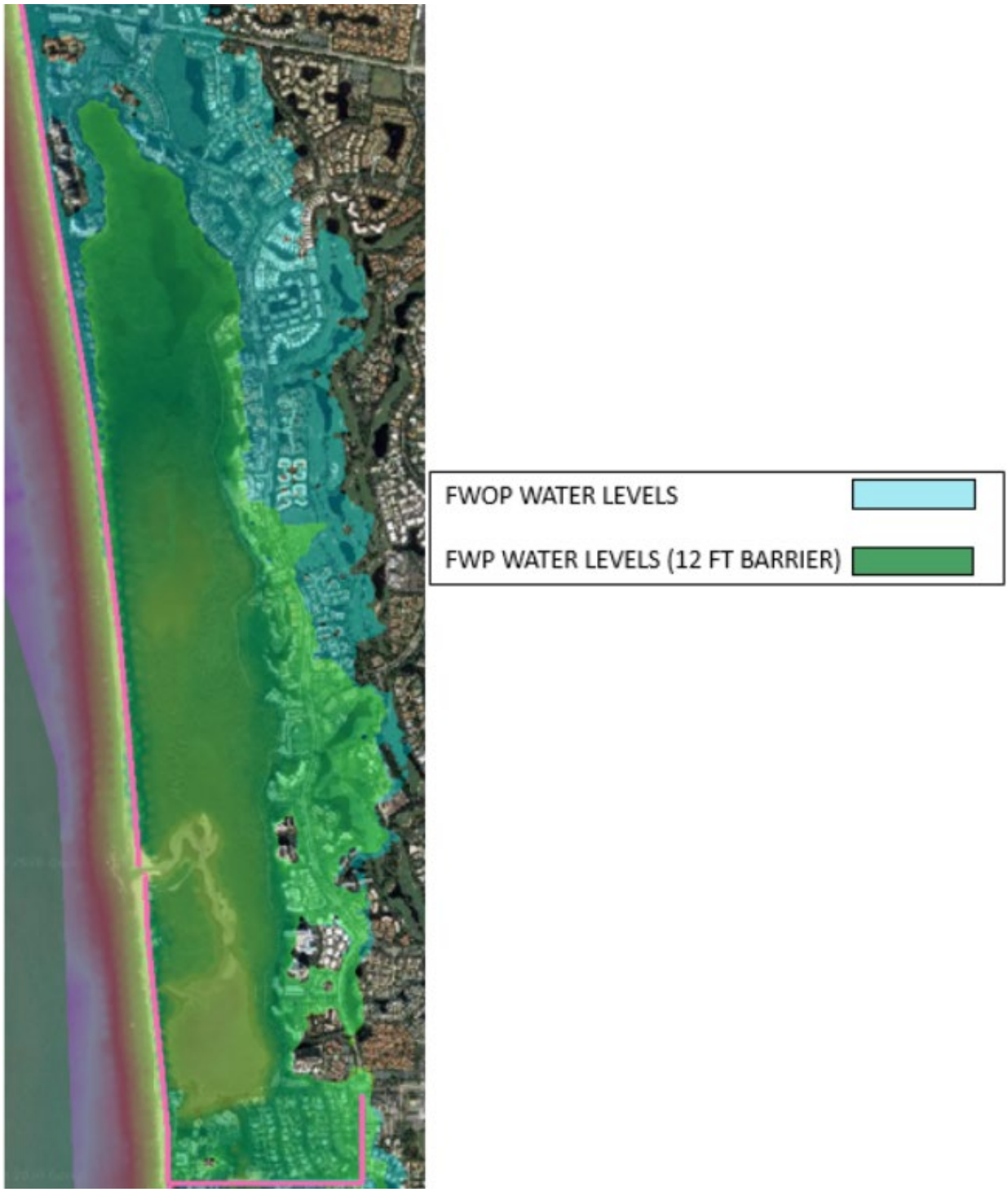

Figure 7.4 HEC-RAS Results for Clam Pass

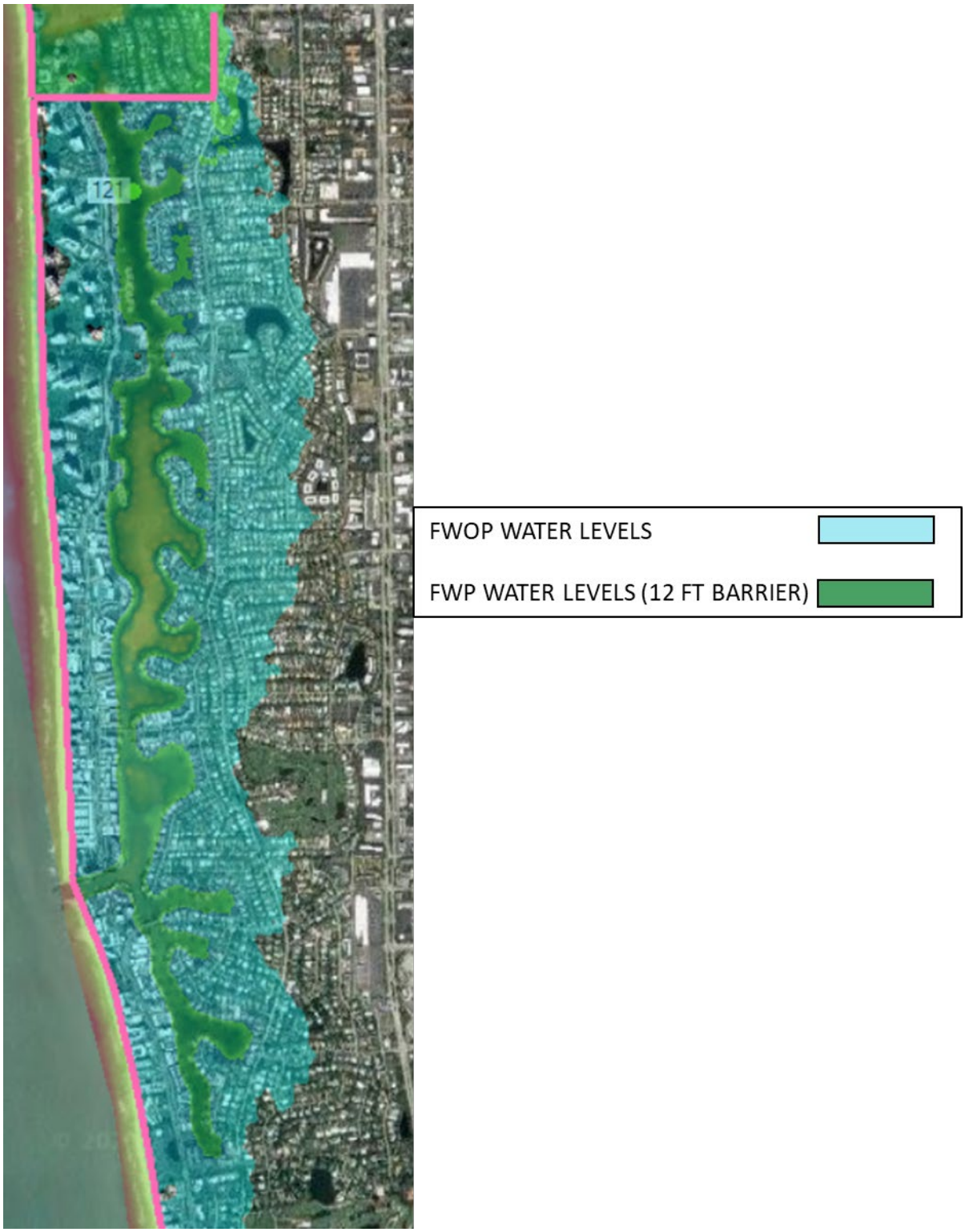

Figure 7.5 HEC-RAS Results- Doctor's Pass

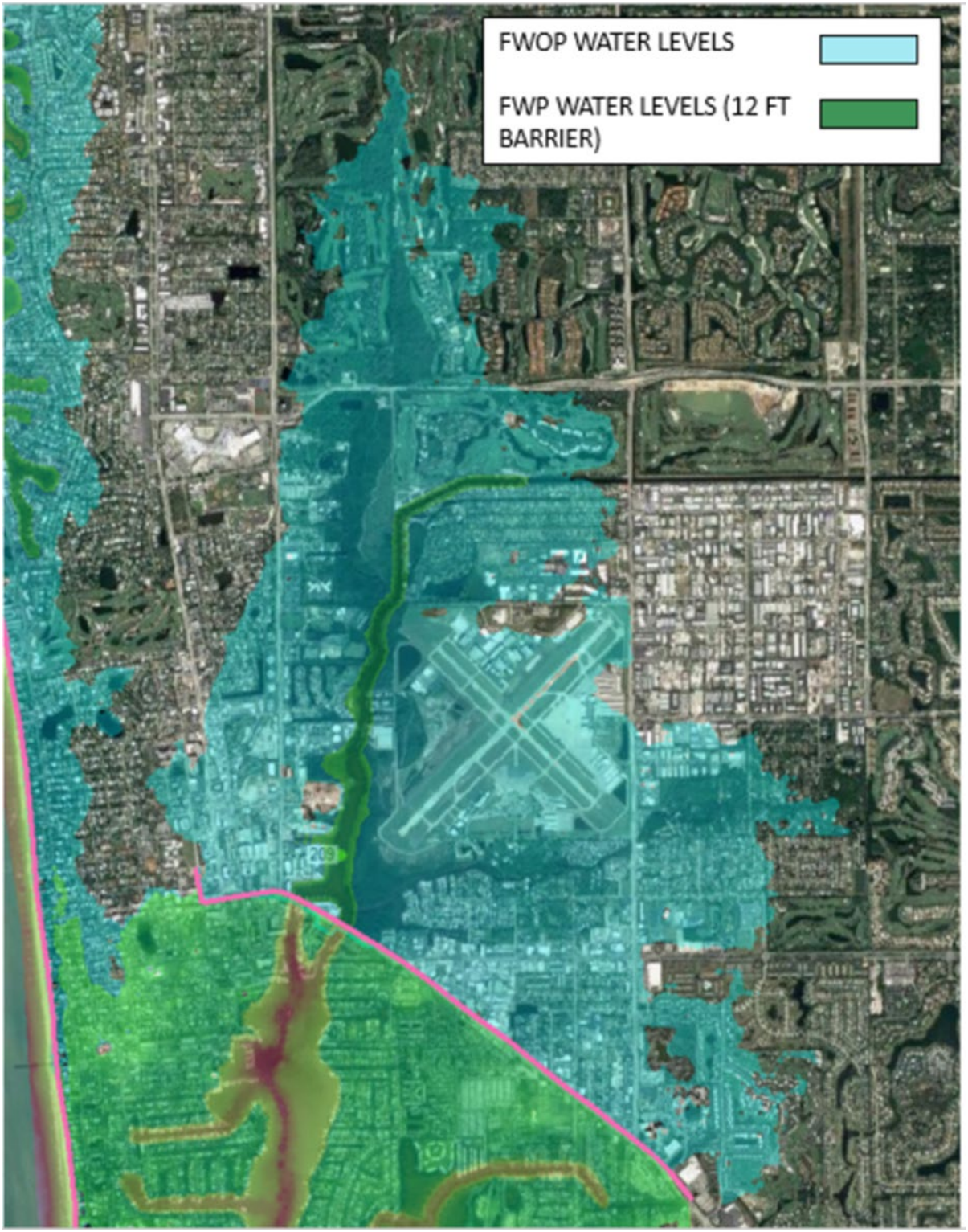

Figure 7.6 HEC-RAS Results Tamiami Trail

Another analysis that preformed in HEC-RAS was to show the effects of having constructing the surge barrier measured but leaving the dunes at their existing height (i.e. FWP to raise the height of the dunes). The blue color symbolizes the future without project water levels; the green/ yellow/red shows the future with project (surge barriers and floodwall only) water levels. This HEC-RAS run only models stillwater and does not include precipitation or waves. The boundary conditions were created from the peak elevation for the 100 year event from the FEMA SWFL study and the average hydrograph shape from previous historical storms. The pink lines denote the storm surge barrier/wall at a height of 12 feet. Figure 7.7 and Figure 7.8 demonstrate how if only the surge barriers are constructed without raising the dunes, during large storm events the dunes themselves will be overtopped and the reduction in flooding provided by only the surge barrier is minimal. These figures can be compared to Figure 7.3 and Figure 7.5 in the section above which show the reduction in the potential flooding footprint when the dunes are raised in addition to the surge barriers.

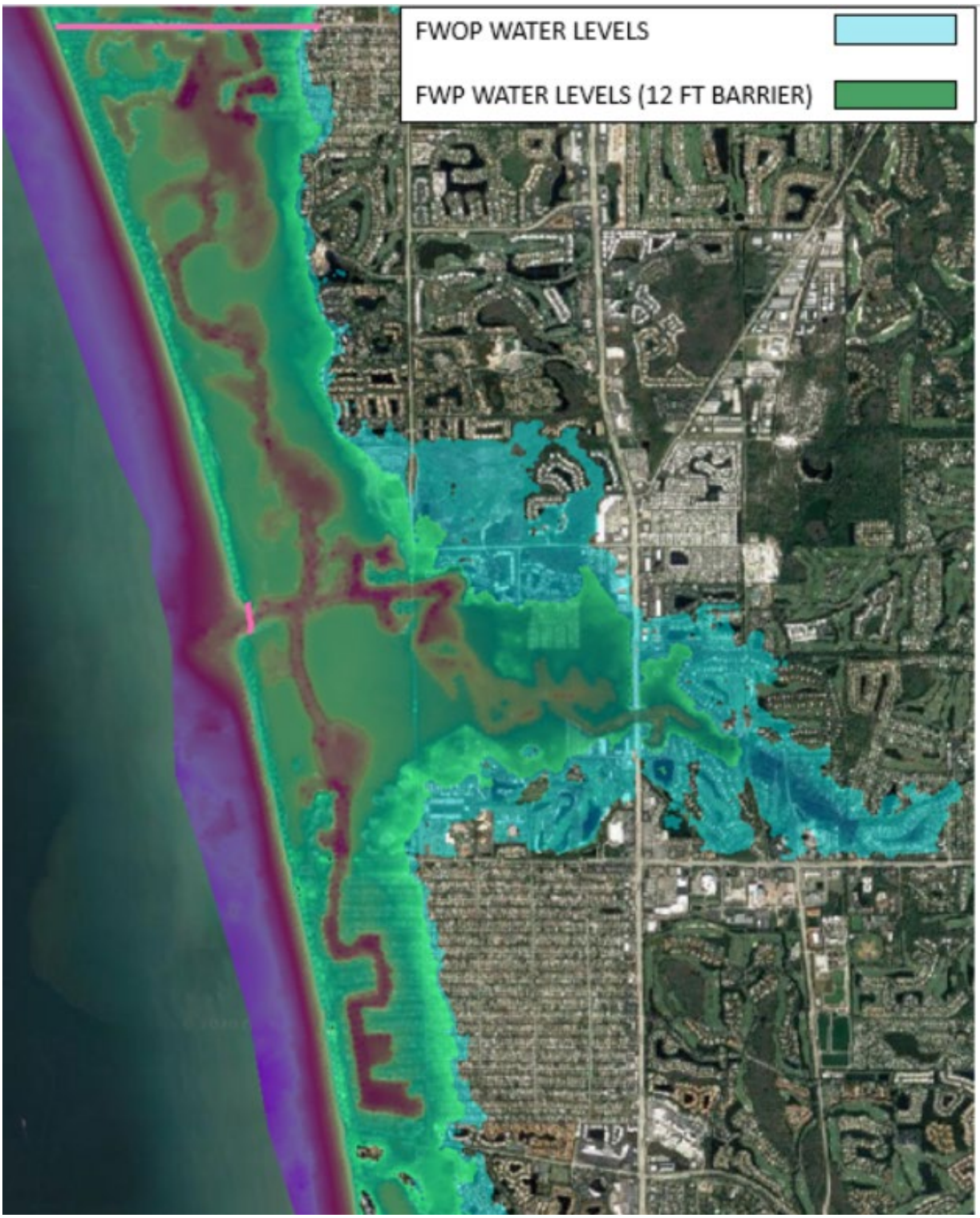

Figure 7.7 Demonstrating the effects of dunes at Wiggins Pass

Figure 7.8 Demonstrating the effects of dunes at Doctors Pass

CHAPTER 8 STORM SURGE BARRIER CLOSURE ANALYSIS

This chapter will discuss how often the storm surge barriers could potentially remain closed during a coastal tidal surge event. This analysis will assume that the duration of the closure will be the same for each proposed area. According to Mooyaart and Jonkman (2017) storm surge barriers are defined as fully or partly movable barriers that can be closed temporarily to limit water levels in the basin behind the barrier, preventing flooding of the area surrounding the inner basin. During normal conditions, the barriers are kept open to all tidal exchanges and navigation. Eighteen storm surge barriers have been built worldwide, with interest to construct more along areas vulnerable to tidal flooding from storm surge. Typically, this analysis would start by choosing a historical storm of record to base the assumption of anticipated days of closure on, however Collier County has not seen. The Collier County starts to see damages occur when the stillwater elevations reach an elevation of 4.0 feet NAVD 88. Only one storm in recent history has resulted in SWL above 4.0 ft NAVD88, Hurricane Irma in 2017. According to water levels recorded at the Naples Pier tide gauge, during Hurricane Irma, water levels were above 4.0 ft NAVD88 for approximately 2 hours, and above 3 ft NAVD88 for approximately 5 hours. Larger storm have hit Collier County, but these storm all occurred prior to the installation of the tide gauge at Naples Pier. Therefore, the duration of the FEMA SWFL Study synthetic storms were also examined as this study modeled probable storms with much larger waters levels. The water level hydrographs of the 27 representative storms used for the Beach-*fx* model were evaluated (see Section 5.4.2 METEROLOGICAL DRIVE FORCES in the main engineering appendix). The hydrographs were assessed for the amount of time water levels were projected above an elevation of 3 ft NAVD88 as it was assumed this would be the water level at which the barriers would be closed. Figure 8.1 displays the hydrographs including RSLR at the start of the project (year 2030). The two storms with the longest amount of time spent above a 3 ft elevation are Synthetic 330 and Synthetic 350, shown in bold in the figure. The hydrograph for Synthetic 330 has water levels above 3 ft NAVD88 for approximately 0.8 days and the hydrograph for Synthetic 350 has water levels above 3 ft NAVD88 for approximately 0.75 days.

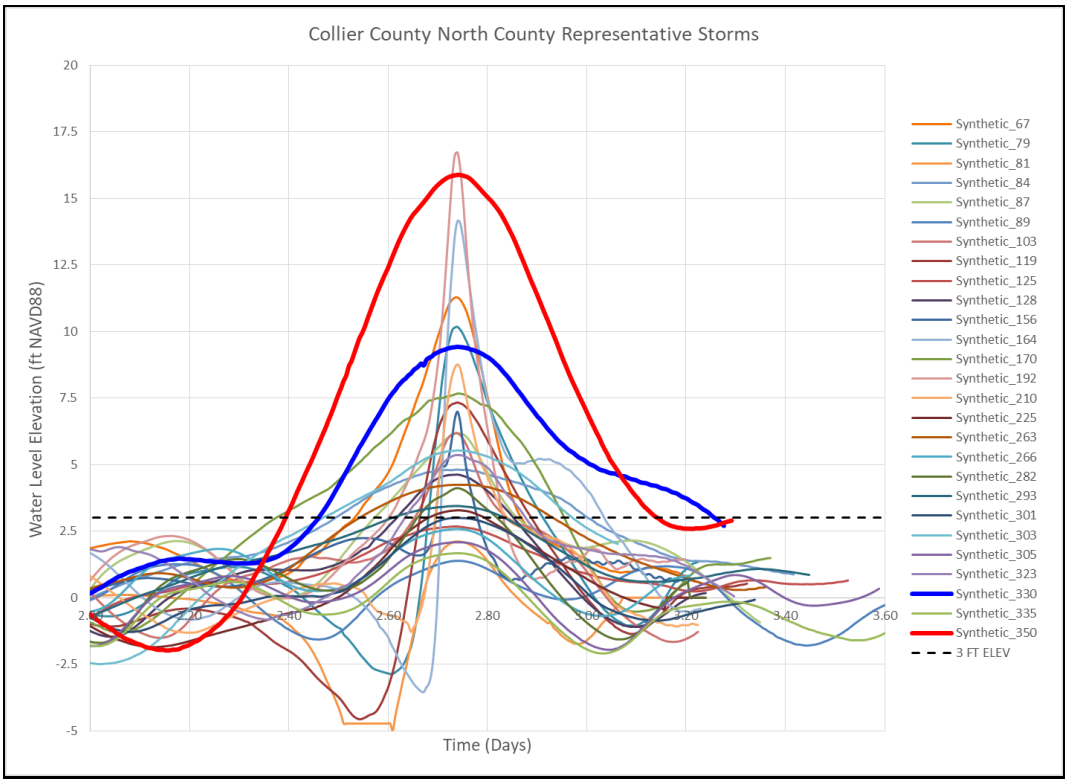

Figure 8.1 Collier County North County Representative Storm SWL hydrographs.

Since the stillwater elevations with storm surge for the recommended plan changes, due to the effects of relative sea level rise over the project economic period of analysis, the changes in the sea level were added to the data that make up Figure 8.1. With the addition of approximately 1.03 ft of sea level rise, the time above 3 ft elevation increases to approximately 1 day for both Synthetic storm 330 and 350.

After observing the existing data and adding the appropriate increase in relative sea level rise, Table 8.2 displays approximately how many days the storm surge barriers would be closed if a storm such as Hurricane Sandy were to occur, starting at the start of the project economic period of analysis (the year 2026), midway through the project economic period of analysis (the year 2050), and the end of the project economic period of analysis (2075). The intent is to ensure that barriers are closed before damages would occur; therefore, the surge barriers would need to be close at a low tide elevation. It was assumed (resulting in Table 8.2) that the barriers would be closed at low tide approximately 12 hours before the 4 foot elevations (in which damages could occur) is expected to rise. It was also assumed that this will be the same for all surge barriers in this project.

Table 8.2. Approximately Closure Time (in days).

Year	Closure Time in days (approx.)
2030	0.75 days
2079	1.0 days

The results of this brief analysis show that as the climate continues to change and sea level rise continues to increase over time, the longer the surge barriers will have to be closed for a given storm event over time, to prevent damages from occurring.

How often and frequent the barriers would need to be closed in a given year is difficult to predict, since one will need to forecast future weather events. Future storm events and their intensity are unknown, which is why the water surface elevations are the only thing analyzed in frequencies and probabilities as they related to storm events. To positively predict and interpret the occurrence of future storm events and their intensities Lane (2008) explains that three things have to be understood: event magnitude, ACE, and spatial scale. Climate Change scientist believe that storm events are occurring more frequently and becoming more intense. In order to accurately assess any changes in the frequency of these events, long term monitoring and data collection is required. Extreme events are still rare compare to the history of recorded data and observing enough of these events to form any statistically viable conclusions (or frequency curves) is going to take many years (Climatica 2018). For example, measurements of storm intensity are very accurate from the 1970s to the present day due to the increasing use of satellites and monitoring networks such as NOAA. Prior to this, however, our records of storm occurrence and frequency are far less accurate due to incomplete written records, and the fact that many storms occur over the oceans, where there are very few human populations who might monitor and record such events and in addition to that our global record are also highly spatially variable as data from less inhabited or developing regions is sparse. Only once the quality and length of our records improve will we be able to more fully understand, and better predict, extreme event frequency for storms (Climatica 2018). The frequency of storm surge barriers can be can only be approached, currently, by observing current frequency curves or water surface elevations. It can be said the barriers would close at approximately at a flood frequency event in which the stillwater elevation is 4.0 feet NAVD 88 (elevation in which damages start to occur) or at a less frequent storm event, but only when the storm surge event of 4 feet or higher is expected.

There are several existing storm surge barriers in the country and around the world, with historical records that show frequency of closures varied throughout the life of the projects. The proposed structural design of the sector gate for storm surge barrier for the Collier County CSRM was similar that of the existing surge barrier constructed by the U.S. Army Corps of Engineers in New Bedford, Massachusett (Figure 8.2).

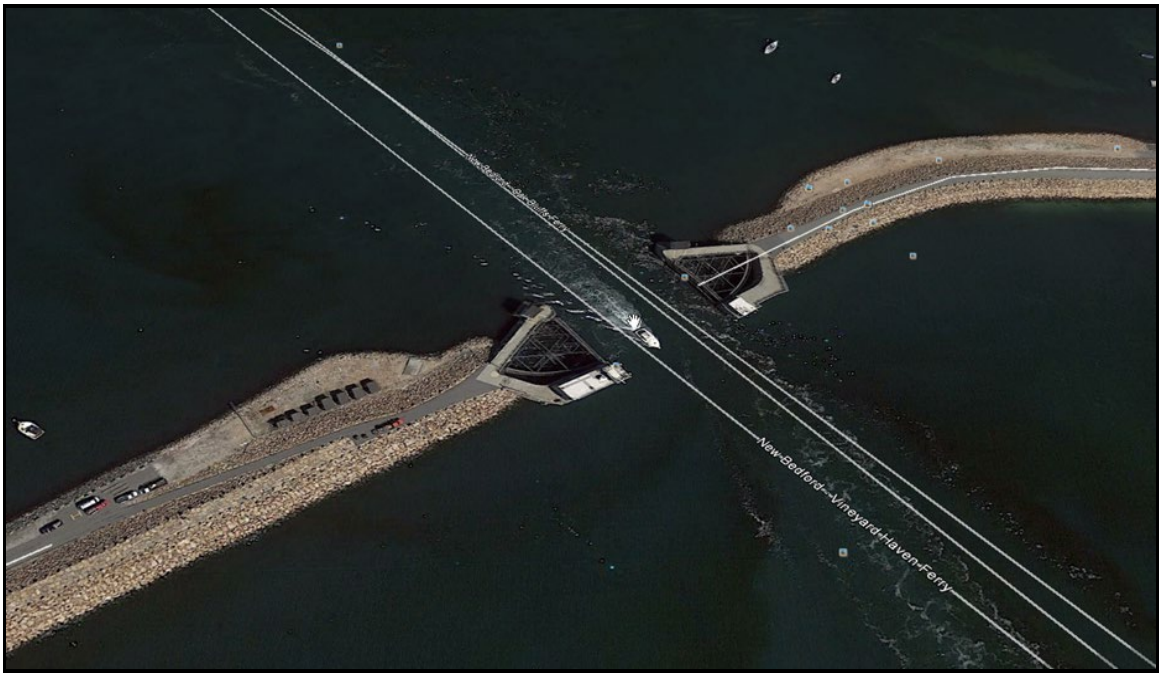

Figure 8.2 Bird's Eye View of the New Bedford – Fairhaven Barrier (Google Earth Image).

.

This barrier consists of a 9,186 foot dam with a crest level of more than 20 feet above mean sea level, a navigation opening of around 151 feet wide is protected by two sector gates. The sector gates have a height of approximately 60 feet and are housed in side chambers in the abutments and are rolled using steel wheels on a concrete sill. The gates take approximately 12 minutes to close. This project can handle the storm surge up to 20 feet. Another storm surge barrier in New England is the Stamford Hurricane Protection Barrier located in Stamford, Connecticut (Figure 8.3).

Figure 8.3 Aerial View of Stamford Hurricane Protection Barrier (Courtesy of USACE –New England District).

Construction for this barrier was completed in January 1969. This barrier, which has an elevation of 17 feet, is composed of a 1,350-foot-long concrete wall; 2,950 feet of earth fill dike with stone slope protection and a pumping station. The third portion provides protection at Westcott Cove. This barrier is a 4,400-foot earth filled dike with stone slope protection having a maximum elevation of 19 feet. It also has two pumping stations. A third barrier is the Fox Point Hurricane Barrier, located in Providence, Rhode Island. Construction of this barrier was completed in 1966 (Figure 8.4). The Fox Point barrier itself is a 700-foot-long concrete structure, 25 feet high, and Two 10 to 15-foot-high earth fill dikes with stone slope protection, flank each side of the barrier. The eastern dike is 780 feet long and the western dike is 1,400 feet long. It also has a pumping station and cooling water canal as integral parts of the project. During a tidal/flood situation, the pumping station's five large pumps can discharge the flood waters of the Providence River through the barrier into the bay. Two gated openings in the pumping station, each 10 feet high and 15 feet wide, admit water into the cooling water canal used by the Narragansett Electric Company, located immediately behind the barrier. Table 8.1 shows a record of how many times each of these three barriers were closed. The record shows that it varies from year to year.

Figure 8.4 Image of Fox Point Barrier (Image courtesy of Wikipedia).

Table 8.1 New England Storm Surge Barriers Closure record.

Fiscal Year	Stamford	New Bedford	Fox Point *		Fiscal Year	Stamford	New Bedford	Fox Point *
1966	--	4	N/A		1993	12	20	N/A
1967	--	2	N/A		1994	3	26	N/A
1968	--	2	N/A		1995	1	17	N/A
1969	7	3	N/A		1996	9	40	N/A
1970	10	5	N/A		1997	10	31	N/A
1971	15	7	N/A		1998	19	25	N/A
1972	25	18	N/A		1999	8	17	N/A
1973	24	12	N/A		2000	10	9	N/A
1974	13	6	N/A		2001	14	11	N/A
1975	16	5	N/A		2002	7	6	N/A
1976	7	7	N/A		2003	11	12	N/A
1977	7	6	N/A		2004	3	10	N/A
1978	22	9	N/A		2005	14	25	N/A
1979	16	11	N/A		2006	14	19	N/A
1980	12	11	N/A		2007	18	16	N/A
1981	5	1	N/A		2008	10	15	N/A
1982	8	4	N/A		2009	12	14	N/A
1983	9	5	N/A		2010	22	38	15
1984	14	7	N/A		2011	16	29	12
1985	7	4	N/A		2012	17	16	12
1986	9	3	N/A		2013	26	29	10
1987	16	4	N/A		2014	13	28	2
1988	5	0	N/A		2015	9	11	4
1989	7	4	N/A		2016	18	32	12
1990	2	4	N/A		**2017**	**16**	**40**	**10**
1991	2	12	N/A					
1992	4	11	N/A		**TOTAL:**	**574**	**703**	**77**

* Corps took over Fox Point Barrier in February 2010

Another barrier with an extensive period of record is the Thames Surge Barrier in London, England (Figure 8.5).

Figure 8.5 Thames Barrier (image courtesy of Wikipedia).

The Thames Barrier protects the city of London against floods. It consists of ten openings with spans ranging from approximately 98 feet to 200 feet. Six rotary segment gates are applied in the larger openings to allow navigation. The other four openings consist of normal segment gates. The length of the barrier is approximately 1,739 feet and was constructed between 1974 and 1982. Table 8.2, below, shows the number of time the Thames Surge Barrier needed to be closed during past storm surge events. It should be noted that the purpose discussing the different surge barriers is to explain that no record from any storm barrier shows a consistent pattern or that frequencies of propose gate closures cannot easily be predicted. In no way, shape or form should the designs and operations of these barriers be a consideration of how the proposed Collier County surge barrier will perform. For coastal engineering projects, solutions are generally site specific.

Table 8.2 Thames Surge Barrier Closure Frequency.

Season (Sep–Apr)	Closures per season			Season (Sep–Apr)	Closures per season		
	From tidal flooding	From fluvial flooding	Total[8]		From tidal flooding	From fluvial flooding	Total[8]
1982–83	1	0	1	2000–01	16	8	24
1983–84	0	0	0	2001–02	3	1	4
1984–85	0	0	0	2002–03	8	12	20
1985–86	0	1	1	2003–04	1	0	1
1986–87	1	0	1	2004–05	4	0	4
1987–88	0	0	0	2005–06	3	0	3
1988–89	1	0	1	2006–07	8	0	8
1989–90	1	3	4	2007–08	6	0	6
1990–91	2	0	2	2008–09	1	4	5
1991–92	0	0	0	2009–10	2	3	5
1992–93	4	0	4	2010–11	0	0	0
1993–94	3	4	7	2011–12	0	0	0
1994–95	2	2	4	2012–13	0	5	5
1995–96	4	0	4	2013–14	9	41	50
1996–97	1	0	1	2014–15	1	0	1
1997–98	1	0	1	2015–16	1	0	1
1998–99	2	0	2	2016–17	2	0	2
1999–00	3	3	6	2017–18	3	0	3

As stated earlier in this chapter stillwater elevation frequencies or probabilities can be determined for a particular project. Therefore, it can be said the barriers could close at approximately at 3.0 - 4.0 feet NAVD 88 stillwater elevation (elevation in which damages start to occur) or less frequent storm event. We can expect storms of lower frequencies to occur. Based on frequency water levels, we can anticipate a storm having storm surge of 3.0 - 4.0 feet to be a 10 year storm, or have a 10% probability of occurring any given year. Historically, one of these size storms has occurred to occur 0 to 1 times a year, however that may increase in future. Water Quality Modeling was performed to see what events the storm surge barriers could have on aquatic life. The results can be read in the Environmental Appendix.

CHAPTER 9 ADJUSTMENTS DURING PRECONSTRUCTION ENGINEERING AND DESIGN (PED)

During PED, the HH&C analysis will be refined and also result in refinement of the design. This chapter will discuss what analysis will be performed during PED.

9.1 HYDRODYNAMIC MODELING OF STRUCTURAL MEASURES

During the PED phase of this project, additional hydromodeling will be used to simulate conditions for a range of conditions (waters levels, winds, etc.). The South Atlantic Coast Comprehensive Study (SACCS) will likely be complete prior to the PED phase and the results from this study can be compared to those from the FEMA SWFL Study referenced in this report. The hydromodeling process will be applied to each alternative plan to determine the behavior of the surge and waves; the interaction between structural measures, coastal features, incoming surge and waves during a storm event, and the likelihood of flooding that could occur inside of the project alignment from overtopping and rainfall during a storm event. When the initial hydromodeling begins for the measures, a step-wise procedure will be used. The steps are as followed:

- Hydromodeling Step 1: Surge Levels and Wave Characteristics
  During the PED phase, the ADCIRC grid that was used for the SACCS modeling, should be used to model the recommended plan structures. The proposed structures of the project plan will be added to the ADCIRC grid in the with-project runs. These runs will be compared to without-project runs. The with-and without-project runs will include storms from the SACCS storm suite with different characteristics (direction, waves, velocity, water levels, rainfall intensity, etc.) that produce storm surges that will range from the design water level to elevations that exceed the design water level. The comparison between the with- and without-project modeling results may result in modifications to the project alignment. At this time we do not know how many simulations will be executed. The project report will include further discussion on how the project structures will be added to the ADCIRC model, how and which storms will be selected for modeling, and if tropical or extra-tropical storms should be modeled. High tides are currently included in the design Stillwater estimates and they will continue to be so in the PED modeling.

- Hydromodeling Step 2: Frequency Analysis
  This step will be performed by the SACCS modeling efforts and as a result the frequency analysis resulted in stage frequencies for different areas around the Collier County. The analysis includes surge, waves, and tides.

- Hydromodeling Step 3: Overtopping Analysis & Volumes
  Wave overtopping analysis was performed by using the computer aided software ACES. FEMA SWFL Study Stillwater levels were computed for three return periods (5% flood, 2% flood, and 1% flood frequencies). This step was performed by using the computer, however, to get a holistic picture of during PED, hydromodeling will be performed to confirm and check the values from the ACES software and compare those values using results from the SACCS.

- Hydromodeling Step 4: Determination of Interior Flooding
  A preliminary stage-storage curve was created for the interior analysis. The existing conditions will have to be modeled for each of the areas that have structures proposed. The existing condition model will need to be calibrated to historical storms. Once calibrated, the model can be stressed to model the future conditions for with and without the project. The difference between the last two conditions would determine the relief capacity of the interior area. Once determined, then sizing of relief option (pump station, gravity outlets, etc.) can be determined. The USACE policy of using the Engineer Manual for Hydrologic Analysis of Interior Areas (EM 1110-2-1413), dated 24 August 2018, would need to apply. As the Bonita Beach floodwall is located close to the boundary between Lee County and Collier County, the Interior Flooding analysis during PED will need to include to the potential impacts of the floodwall in Lee County.

9.2 INTERIOR DRAINAGE

A more detailed H&H analysis is recommended for the PED phase. As a result the H&H analysis will most likely have smaller watersheds to more accurately account for runoff, groundwater, and the operations of the gated structures.

CHAPTER 10 REFERENCES

1. Climatica. 2018. Return Periods of Extreme Events. http://climatica.org.uk/climate-science-information/return-periods-extreme-events.

2. Collier County. 2015. Floodplain Management Plan, Collier County, Florida.

3. EurOtop. 2007. Wave Overtopping of Sea Defences and Related Structures: Assessment Manual. www.overtopping-manual.com.

4. EurOtop. 2018. Manual on wave overtopping of sea defences and related structures. An overtopping manual largely based on European research, but for worldwide application. Van der Meer, J.W., Allsop, N.W.H., Bruce, T., De Rouck, J., Kortenhaus, A., Pullen, T., Schüttrumpf, H., Troch, P. and Zanuttigh, B., www.overtopping-manual.com.

5. FEMA, 2015. Southwest Florida Storm Surge Study, Final Intermediate Data Submittal #1, FEMA IDIQ Contract HSFEHQ-09-D-0369. Federal Emergency Management Agency.

6. FEMA, 2017. Southwest Florida Storm Surge Study, Intermediate Data Submittal #2 Fifth Submission, FEMA IDIQ Contract HSFEHQ-09-D-0369. Federal Emergency Management Agency.

7. FEMA, 2018. Southwest Florida Storm Surge Study, Draft Intermediate Data Submittal #3 Fifth Submission, FEMA IDIQ Contract HSFEHQ-09-D-0369. Federal Emergency Management Agency.

8. Hergerl, Gabriele C.; et al. 2007. Understanding and Attributing Climate Change. Climate Change 2007: The Physical Science Basis. Contribution of Working Group I to the Fourth Assessment report of the Intergovernmental Panel on Climate Change. Intergovernmental Panel on Climate Change.

9. Kamphuis, J.W., 2010. Introduction to Coastal Engineering. 2nd Edition. World Scientific.

10. Lane, S.N., 2008. "Climate Change and the summer 2007 flood in the U.K.". *Forthcoming in Geography*. Institute of Hazard and Risk Research and Department of Geography, Durham University, Science Laboratories, South Road, Durham, DH1 3LE, U.K.

11. Mooyaart, L., Jonkman, S., M. (2017). "Overview and Design Considerations of Storm Surge

Barriers." *Journal of Waterway, Port, Coastal, and Ocean Engineering.* ASCE, Reston, VA.

12. National Research Council (NRC) 1987. Responding to changes in sea level: engineering implications. Commission of Engineering and Technical Systems, National Research Council, National Academy Press, Washington, DC

13. NOAA. Atlas Volume 9 Version 2. Rev. 2013. Precipitation-Frequency Analysis of the United States. National Oceanic and Atmospheric Administration.

14. OWI, 2015. Tropical Forcing for the Southwest Coast Florida Surge Study. FEMA IDIQ Subcontract HSFEHQ-09-D-0369-D010. Oceanweather Inc.

15. Resio, D.T. 2007. *White Paper on Estimating Hurricane Inundation Probabilities*. Appendix 8-2 (R2007) of *Interagency Performance Evaluation Taskforce (IPET) Final Report (Interim)*. U.S. Army Corps of Engineers. Available at https://ipet.wes.army.mil/NOHPP/_Post-Katrina/(IPET)InteragencyPerformanceEvaluationTaskForce/Reports/IPETFinalReport/VolumeVIII/TechnicalAppendices.pdf.

16. Sant-Miller, A., Huber, M., and White, K.D. 2018. US Army Corps of Engineers Sea Level Tracker User Guide. US Army Corps of Engineers: Washington, DC.

17. Toro, G.R., D.T. Resio, D. Divoky, A.W. Niedoroda, and C. Reed. 2010a. "Effective Joint-Probability Methods of hurricane surge frequency analysis." *Ocean Engineering* 37:125–134.

18. Toro, G.R., A.W. Niedoroda, C.W. Reed, and D. Divoky. 2010b. "Quadrature-based approach for the efficient evaluation of surge hazard." Ocean Engineering 37:114–124.

19. USACE. 1980. Flood Damage Reduction Measures in Urban Areas. Engineer Regulation 1165-2-21. U.S. Army Corps Engineers.

20. USACE. 1984. Shore Protection Manual. U.S. Army Corps of Engineers.

21. USACE. 1989. Retaining and Flood Walls. Engineer Manual 1110-2-2502. U.S. Army Corps of Engineers.

22. USACE. 1995. General Principles of Pumping Station Design and Layout. Engineer Manual 1110-2-3102. U.S. Army Corps of Engineers.

23. USACE. 2006. Coastal Engineering Manual (CEM). U.S. Army Corps of Engineers

24. USACE. 2009. Engineering and Design: Policies for Referencing Project Evaluation Grades to Nationwide Vertical Datums. Engineer Regulation 1110-2-8160. U.S. Army Corps Engineers.

25. USACE 2011. Engineering and Design of I-walls. Engineer Circular 1110-2-6066. U.S. Army Corps of Engineers.

26. USACE. 2013. Incorporating Sea Level Change in Civil Works Programs. Engineer Regulation 1100-2-8162. U.S. Army Corps of Engineers.

27. USACE. 2015. Recent US Climate Change and Hydrology Literature Applicable to US Army Corps of Engineers Missions – South Atlantic- Gulf Region. Report No. CWTS-2015-03.

28. USACE. 2018. Hydrologic Analysis of Interior Areas. Engineer Manual 1110-2-1413. U.S. Army Corps of Engineers.

29. USACE. ECB 2018-14. Guidance for Incorporating Climate Change Impacts to Inland Hydrology in Civil Works Studies, Design, and Projects. Issued 10 Sep 18 Expires: 10 Sep 20.

30. USACE. 2019. Procedures to Evaluate Sea Level Change: Impacts, Responses, and Adaptation. Engineer Pamphlet 1110-2-1. U.S. Army Corps Engineers.

ATTACHMENTS

ATTACHMENT HH&C-1: WAVE OVERTOPPING RATES: ACES OUTPUTS & EUROTOP SPREADSHEETS

ATTACHMENT HH&C-2: HAND CALCULATIONS OF WAVE FORCES ON A VERTICAL WALL

ATTACHMENT HH&C-3: FEMA SWFL STORM PARAMETERS

ATTACHMENT HH&C-1: WAVE OVERTOPPING RATES: ACES OUTPUTS & EUROTOP SPREADSHEETS

ACES OUTPUTS

BONITA BEACH GATES/WALLS: VERTICAL WALL

Case: 2030_5% FLOOD (20 YR) OVERTOPPING: BONITA BEACH GATES/WALLS

Wave Runup and Overtopping on Impermeable Structures

Wave type:	Irregular	Slope type:	Smooth		
Rate estimate:	Overtopping				
Breaking criteria:	0.780				
Incident significant wave ht (Hi):	2.000	ft	Runup for significant waves (R):	2.308	ft
Peak wave period (T):	2.500		Onshore wind velocity (U):	80.000	ft/sec
COTAN of nearshore slope (cot phi):	100.000		Deepwater significant wave (Ho):	2.157	ft
Water depth at structure toe (ds):	7.500	ft	Relative height (ds/Ho):	3.478	
COTAN of structure slope (cot theta):	0.000		Wave steepness (Ho/gT^2):	0.011	
Structure height above toe (hs):	10.000	ft	Overtopping coef(alpha):	0.070	
			Overtopping coef(Q*o):	0.007	
			Overtopping rate (Q):	0.008	$ft^3/s\text{-}ft$

Case: 2030_2% FLOOD (50 YR) OVERTOPPING: BONITA BEACH GATES/WALLS

Wave Runup and Overtopping on Impermeable Structures

Wave type:	Irregular	Slope type:	Smooth		
Rate estimate:	Overtopping				
Breaking criteria:	0.780				
Incident significant wave ht (Hi):	2.800	ft	Runup for significant waves (R):	3.254	ft
Peak wave period (T):	2.900		Onshore wind velocity (U):	80.000	ft/sec
COTAN of nearshore slope (cot phi):	100.000		Deepwater significant wave (Ho):	3.037	ft
Water depth at structure toe (ds):	9.300	ft	Relative height (ds/Ho):	3.062	
COTAN of structure slope (cot theta):	0.000		Wave steepness (Ho/gT^2):	0.011	
Structure height above toe (hs):	13.000	ft	Overtopping coef(alpha):	0.070	
			Overtopping coef(Q*o):	0.007	
			Overtopping rate (Q):	0.010	$ft^3/s\text{-}ft$

Case: 2030_1% FLOOD (100 YR) OVERTOPPING: BONITA BEACH GATES/WALLS

Wave Runup and Overtopping on Impermeable Structures

Wave type:	Irregular	Slope type:	Smooth		
Rate estimate:	Overtopping				
Breaking criteria:	0.780				
Incident significant wave ht (Hi):	3.500	ft	Runup for significant waves (R):	4.086	ft
Peak wave period (T):	3.100		Onshore wind velocity (U):	80.000	ft/sec
COTAN of nearshore slope (cot phi):	100.000		Deepwater significant wave (Ho):	3.790	ft
Water depth at structure toe (ds):	10.900	ft	Relative height (ds/Ho):	2.876	
COTAN of structure slope (cot theta):	0.000		Wave steepness (Ho/gT^2):	0.012	
Structure height above toe (hs):	15.500	ft	Overtopping coef(alpha):	0.070	
			Overtopping coef(Q*o):	0.007	
			Overtopping rate (Q):	0.015	$ft^3/s\text{-}ft$

Case: 2079_5% FLOOD (20 YR) OVERTOPPING: BONITA BEACH GATES/WALLS

Wave Runup and Overtopping on Impermeable Structures

Wave type:	Irregular	Slope type:	Smooth		
Rate estimate:	Overtopping				
Breaking criteria:	0.780				
Incident significant wave ht (Hi):	2.000	ft	Runup for significant waves (R):	2.296	ft
Peak wave period (T):	2.500		Onshore wind velocity (U):	80.000	ft/sec
COTAN of nearshore slope (cot phi):	100.000		Deepwater significant wave (Ho):	2.133	ft
Water depth at structure toe (ds):	8.500	ft	Relative height (ds/Ho):	3.984	
COTAN of structure slope (cot theta):	0.000		Wave steepness (Ho/gT^2):	0.011	
Structure height above toe (hs):	10.000	ft	Overtopping coef(alpha):	0.070	
			Overtopping coef(Q*o):	0.007	
			Overtopping rate (Q):	0.094	$ft^3/s\text{-}ft$

Case: 2079_2% FLOOD (50 YR) OVERTOPPING: BONITA BEACH GATES/WALLS

Wave Runup and Overtopping on Impermeable Structures

Wave type:	Irregular	Slope type:	Smooth		
Rate estimate:	Overtopping				
Breaking criteria:	0.780				
Incident significant wave ht (Hi):	2.800	ft	Runup for significant waves (R):	3.236	ft
Peak wave period (T):	2.900		Onshore wind velocity (U):	80.000	ft/sec
COTAN of nearshore slope (cot phi):	100.000		Deepwater significant wave (Ho):	3.014	ft
Water depth at structure toe (ds):	10.300	ft	Relative height (ds/Ho):	3.417	
COTAN of structure slope (cot theta):	0.000		Wave steepness (Ho/gT^2):	0.011	
Structure height above toe (hs):	13.000	ft	Overtopping coef(alpha):	0.070	
			Overtopping coef(Q*o):	0.007	
			Overtopping rate (Q):	0.059	$ft^3/s\text{-}ft$

Case: 2079_1% FLOOD (100 YR) OVERTOPPING: BONITA BEACH GATES/WALLS

Wave Runup and Overtopping on Impermeable Structures

Wave type:	Irregular	Slope type:	Smooth		
Rate estimate:	Overtopping				
Breaking criteria:	0.780				
Incident significant wave ht (Hi):	3.500	ft	Runup for significant waves (R):	4.065	ft
Peak wave period (T):	3.100		Onshore wind velocity (U):	80.000	ft/sec
COTAN of nearshore slope (cot phi):	100.000		Deepwater significant wave (Ho):	3.765	ft
Water depth at structure toe (ds):	11.900	ft	Relative height (ds/Ho):	3.161	
COTAN of structure slope (cot theta):	0.000		Wave steepness (Ho/gT^2):	0.012	
Structure height above toe (hs):	15.500	ft	Overtopping coef(alpha):	0.070	
			Overtopping coef(Q*o):	0.007	
			Overtopping rate (Q):	0.061	$ft^3/s\text{-}ft$

WIGGINS PASS SURGE BARRIER/WALLS: VERTICAL WALL

Case: 2030_10% FLOOD (10 YR) OVERTOPPING: WIGGINS PASS SURGE BARRIER/WALLS

Wave Runup and Overtopping on Impermeable Structures

Wave type: Irregular Slope type: Smooth
Rate estimate: Overtopping

Breaking criteria:	0.780				
Incident significant wave ht (Hi):	4.100	ft	Runup for significant waves (R):	5.916	ft
Peak wave period (T):	11.700		Onshore wind velocity (U):	80.000	ft/sec
COTAN of nearshore slope (cot phi):	70.000		Deepwater significant wave (Ho):	3.296	ft
Water depth at structure toe (ds):	13.100	ft	Relative height (ds/Ho):	3.975	
COTAN of structure slope (cot theta):	0.000		Wave steepness (Ho/gT^2):	0.001	
Structure height above toe (hs):	21.000	ft	Overtopping coef(alpha):	0.075	
			Overtopping coef(Q*o):	0.088	
			Overtopping rate (Q):	0.012	$ft^3/s\text{-}ft$

Case: 2030_5% FLOOD (20 YR) OVERTOPPING: WIGGINS PASS SURGE BARRIER/WALLS

Wave Runup and Overtopping on Impermeable Structures

Wave type: Irregular Slope type: Smooth
Rate estimate: Overtopping

Breaking criteria:	0.780				
Incident significant wave ht (Hi):	4.900	ft	Runup for significant waves (R):	7.411	ft
Peak wave period (T):	13.100		Onshore wind velocity (U):	80.000	ft/sec
COTAN of nearshore slope (cot phi):	70.000		Deepwater significant wave (Ho):	3.837	ft
Water depth at structure toe (ds):	14.600	ft	Relative height (ds/Ho):	3.805	
COTAN of structure slope (cot theta):	0.000		Wave steepness (Ho/gT^2):	0.001	
Structure height above toe (hs):	24.500	ft	Overtopping coef(alpha):	0.075	
			Overtopping coef(Q*o):	0.088	
			Overtopping rate (Q):	0.015	$ft^3/s\text{-}ft$

Case: 2030_2% FLOOD (50 YR) OVERTOPPING: WIGGINS PASS SURGE BARRIER/WALLS

Wave Runup and Overtopping on Impermeable Structures

Wave type: Irregular Slope type: Smooth
Rate estimate: Overtopping

Breaking criteria:	0.780				
Incident significant wave ht (Hi):	6.000	ft	Runup for significant waves (R):	9.510	ft
Peak wave period (T):	14.700		Onshore wind velocity (U):	80.000	ft/sec
COTAN of nearshore slope (cot phi):	70.000		Deepwater significant wave (Ho):	4.598	ft
Water depth at structure toe (ds):	16.700	ft	Relative height (ds/Ho):	3.632	
COTAN of structure slope (cot theta):	0.000		Wave steepness (Ho/gT^2):	0.001	
Structure height above toe (hs):	29.500	ft	Overtopping coef(alpha):	0.075	
			Overtopping coef(Q*o):	0.088	
			Overtopping rate (Q):	0.019	$ft^3/s\text{-}ft$

Case: 2030_1% FLOOD (100 YR) OVERTOPPING: WIGGINS PASS SURGE BARRIER/WALLS

Wave Runup and Overtopping on Impermeable Structures

Wave type: Irregular Slope type: Smooth
Rate estimate: Overtopping

Breaking criteria:	0.780				
Incident significant wave ht (Hi):	6.800	ft	Runup for significant waves (R):	11.029	ft
Peak wave period (T):	15.700		Onshore wind velocity (U):	80.000	ft/sec
COTAN of nearshore slope (cot phi):	70.000		Deepwater significant wave (Ho):	5.164	ft
Water depth at structure toe (ds):	18.300	ft	Relative height (ds/Ho):	3.544	
COTAN of structure slope (cot theta):	0.000		Wave steepness (Ho/gT^2):	0.001	
Structure height above toe (hs):	33.500	ft	Overtopping coef(alpha):	0.075	
			Overtopping coef(Q*o):	0.088	
			Overtopping rate (Q):	0.017	$ft^3/s\text{-}ft$

Case: 2079_10% FLOOD (10 YR) OVERTOPPING: WIGGINS PASS SURGE BARRIER/WALLS

Wave Runup and Overtopping on Impermeable Structures

Wave type: Irregular Slope type: Smooth
Rate estimate: Overtopping

Breaking criteria:	0.780				
Incident significant wave ht (Hi):	4.100	ft	Runup for significant waves (R):	5.724	ft
Peak wave period (T):	11.700		Onshore wind velocity (U):	80.000	ft/sec
COTAN of nearshore slope (cot phi):	70.000		Deepwater significant wave (Ho):	3.349	ft
Water depth at structure toe (ds):	14.100	ft	Relative height (ds/Ho):	4.210	
COTAN of structure slope (cot theta):	0.000		Wave steepness (Ho/gT^2):	0.001	
Structure height above toe (hs):	21.000	ft	Overtopping coef(alpha):	0.075	
			Overtopping coef(Q*o):	0.088	
			Overtopping rate (Q):	0.032	$ft^3/s\text{-}ft$

Case: 2079_5% FLOOD (20 YR) OVERTOPPING: WIGGINS PASS SURGE BARRIER/WALLS

Wave Runup and Overtopping on Impermeable Structures

Wave type: Irregular Slope type: Smooth
Rate estimate: Overtopping

Breaking criteria:	0.780				
Incident significant wave ht (Hi):	4.900	ft	Runup for significant waves (R):	7.161	ft
Peak wave period (T):	13.100		Onshore wind velocity (U):	80.000	ft/sec
COTAN of nearshore slope (cot phi):	70.000		Deepwater significant wave (Ho):	3.894	ft
Water depth at structure toe (ds):	15.600	ft	Relative height (ds/Ho):	4.006	
COTAN of structure slope (cot theta):	0.000		Wave steepness (Ho/gT^2):	0.001	
Structure height above toe (hs):	24.500	ft	Overtopping coef(alpha):	0.075	
			Overtopping coef(Q*o):	0.088	
			Overtopping rate (Q):	0.031	$ft^3/s\text{-}ft$

Case: 2079_2% FLOOD (50 YR) OVERTOPPING: WIGGINS PASS SURGE BARRIER/WALLS

Wave Runup and Overtopping on Impermeable Structures

Wave type: Irregular Slope type: Smooth
Rate estimate: Overtopping

Breaking criteria:	0.780				
Incident significant wave ht (Hi):	6.000	ft	Runup for significant waves (R):	9.193	ft
Peak wave period (T):	14.700		Onshore wind velocity (U):	80.000	ft/sec
COTAN of nearshore slope (cot phi):	70.000		Deepwater significant wave (Ho):	4.659	ft
Water depth at structure toe (ds):	17.700	ft	Relative height (ds/Ho):	3.799	
COTAN of structure slope (cot theta):	0.000		Wave steepness (Ho/gT^2):	0.001	
Structure height above toe (hs):	29.500	ft	Overtopping coef(alpha):	0.075	
			Overtopping coef(Q*o):	0.088	
			Overtopping rate (Q):	0.030	$ft^3/s\text{-}ft$

Case: 2079_1% FLOOD (100 YR) OVERTOPPING: WIGGINS PASS SURGE BARRIER/WALLS

Wave Runup and Overtopping on Impermeable Structures

Wave type: Irregular Slope type: Smooth
Rate estimate: Overtopping

Breaking criteria:	0.780				
Incident significant wave ht (Hi):	6.800	ft	Runup for significant waves (R):	10.640	ft
Peak wave period (T):	15.700		Onshore wind velocity (U):	80.000	ft/sec
COTAN of nearshore slope (cot phi):	70.000		Deepwater significant wave (Ho):	5.233	ft
Water depth at structure toe (ds):	19.400	ft	Relative height (ds/Ho):	3.708	
COTAN of structure slope (cot theta):	0.000		Wave steepness (Ho/gT^2):	0.001	
Structure height above toe (hs):	33.500	ft	Overtopping coef(alpha):	0.075	
			Overtopping coef(Q*o):	0.088	
			Overtopping rate (Q):	0.026	$ft^3/s\text{-}ft$

SEAGATE GATE/WALLS: VERTICAL WALL

Case: 2030_5% FLOOD (20 YR) OVERTOPPING: SEAGATE GATE/WALLS

Wave Runup and Overtopping on Impermeable Structures

Wave type: Irregular Slope type: Smooth
Rate estimate: Overtopping

Breaking criteria:	0.780				
Incident significant wave ht (Hi):	1.900	ft	Runup for significant waves (R):	2.172	ft
Peak wave period (T):	2.400		Onshore wind velocity (U):	80.000	ft/sec
COTAN of nearshore slope (cot phi):	100.000		Deepwater significant wave (Ho):	1.985	ft
Water depth at structure toe (ds):	9.600	ft	Relative height (ds/Ho):	4.835	
COTAN of structure slope (cot theta):	0.000		Wave steepness (Ho/gT^2):	0.011	
Structure height above toe (hs):	12.000	ft	Overtopping coef(alpha):	0.070	
			Overtopping coef(Q*o):	0.007	
			Overtopping rate (Q):	0.006	$ft^3/s\text{-}ft$

Case: 2030_2% FLOOD (50 YR) OVERTOPPING: SEAGATE GATE/WALLS

Wave Runup and Overtopping on Impermeable Structures

Wave type: Irregular Slope type: Smooth
Rate estimate: Overtopping

Breaking criteria:	0.780				
Incident significant wave ht (Hi):	2.400	ft	Runup for significant waves (R):	2.751	ft
Peak wave period (T):	2.600		Onshore wind velocity (U):	80.000	ft/sec
COTAN of nearshore slope (cot phi):	100.000		Deepwater significant wave (Ho):	2.496	ft
Water depth at structure toe (ds):	11.800	ft	Relative height (ds/Ho):	4.727	
COTAN of structure slope (cot theta):	0.000		Wave steepness (Ho/gT^2):	0.011	
Structure height above toe (hs):	14.500	ft	Overtopping coef(alpha):	0.070	
			Overtopping coef(Q*o):	0.007	
			Overtopping rate (Q):	0.018	$ft^3/s\text{-}ft$

Case: 2030_1% FLOOD (100 YR) OVERTOPPING: SEAGATE GATE/WALLS

Wave Runup and Overtopping on Impermeable Structures

Wave type: Irregular Slope type: Smooth
Rate estimate: Overtopping

Breaking criteria:	0.780				
Incident significant wave ht (Hi):	2.900	ft	Runup for significant waves (R):	3.334	ft
Peak wave period (T):	2.800		Onshore wind velocity (U):	80.000	ft/sec
COTAN of nearshore slope (cot phi):	100.000		Deepwater significant wave (Ho):	3.027	ft
Water depth at structure toe (ds):	13.200	ft	Relative height (ds/Ho):	4.360	
COTAN of structure slope (cot theta):	0.000		Wave steepness (Ho/gT^2):	0.012	
Structure height above toe (hs):	17.000	ft	Overtopping coef(alpha):	0.070	
			Overtopping coef(Q*o):	0.007	
			Overtopping rate (Q):	0.010	$ft^3/s\text{-}ft$

Case: 2079_5% FLOOD (20 YR) OVERTOPPING: SEAGATE GATE/WALLS

Wave Runup and Overtopping on Impermeable Structures

Wave type:	Irregular	Slope type:	Smooth		
Rate estimate:	Overtopping				
Breaking criteria:	0.780				
Incident significant wave ht (Hi):	1.900	ft	Runup for significant waves (R):	2.168	ft
Peak wave period (T):	2.400		Onshore wind velocity (U):	80.000	ft/sec
COTAN of nearshore slope (cot phi):	100.000		Deepwater significant wave (Ho):	1.966	ft
Water depth at structure toe (ds):	10.600	ft	Relative height (ds/Ho):	5.392	
COTAN of structure slope (cot theta):	0.000		Wave steepness (Ho/gT^2):	0.011	
Structure height above toe (hs):	12.000	ft	Overtopping coef(alpha):	0.070	
			Overtopping coef(Q*o):	0.007	
			Overtopping rate (Q):	0.087	$ft^3/s\text{-}ft$

Case: 2079_2% FLOOD (50 YR) OVERTOPPING: SEAGATE GATE/WALLS

Wave Runup and Overtopping on Impermeable Structures

Wave type:	Irregular	Slope type:	Smooth		
Rate estimate:	Overtopping				
Breaking criteria:	0.780				
Incident significant wave ht (Hi):	2.400	ft	Runup for significant waves (R):	2.747	ft
Peak wave period (T):	2.600		Onshore wind velocity (U):	80.000	ft/sec
COTAN of nearshore slope (cot phi):	100.000		Deepwater significant wave (Ho):	2.476	ft
Water depth at structure toe (ds):	12.800	ft	Relative height (ds/Ho):	5.169	
COTAN of structure slope (cot theta):	0.000		Wave steepness (Ho/gT^2):	0.011	
Structure height above toe (hs):	14.500	ft	Overtopping coef(alpha):	0.070	
			Overtopping coef(Q*o):	0.007	
			Overtopping rate (Q):	0.141	$ft^3/s\text{-}ft$

Case: 2079_1% FLOOD (100 YR) OVERTOPPING: SEAGATE GATE/WALLS

Wave Runup and Overtopping on Impermeable Structures

Wave type:	Irregular	Slope type:	Smooth		
Rate estimate:	Overtopping				
Breaking criteria:	0.780				
Incident significant wave ht (Hi):	2.900	ft	Runup for significant waves (R):	3.329	ft
Peak wave period (T):	2.800		Onshore wind velocity (U):	80.000	ft/sec
COTAN of nearshore slope (cot phi):	100.000		Deepwater significant wave (Ho):	3.005	ft
Water depth at structure toe (ds):	14.200	ft	Relative height (ds/Ho):	4.725	
COTAN of structure slope (cot theta):	0.000		Wave steepness (Ho/gT^2):	0.012	
Structure height above toe (hs):	17.000	ft	Overtopping coef(alpha):	0.070	
			Overtopping coef(Q*o):	0.007	
			Overtopping rate (Q):	0.057	$ft^3/s\text{-}ft$

DOCTORS PASS SURGE BARRIER/WALLS: VERTICAL WALL

Case: 2030_10% FLOOD (10 YR) OVERTOPPING: DOCTORS PASS SURGE BARRIER/WALLS

Wave Runup and Overtopping on Impermeable Structures

Wave type: Irregular Slope type: Smooth
Rate estimate: Overtopping

Breaking criteria:	0.780				
Incident significant wave ht (Hi):	4.300	ft	Runup for significant waves (R):	5.323	ft
Peak wave period (T):	6.400		Onshore wind velocity (U):	80.000	ft/sec
COTAN of nearshore slope (cot phi):	100.000		Deepwater significant wave (Ho):	4.314	ft
Water depth at structure toe (ds):	12.300	ft	Relative height (ds/Ho):	2.851	
COTAN of structure slope (cot theta):	0.000		Wave steepness (Ho/gT^2):	0.003	
Structure height above toe (hs):	18.500	ft	Overtopping coef(alpha):	0.067	
			Overtopping coef(Q*o):	0.009	
			Overtopping rate (Q):	0.014	$ft^3/s\text{-}ft$

Case: 2030_5% FLOOD (20 YR) OVERTOPPING: DOCTORS PASS SURGE BARRIER/WALLS

Wave Runup and Overtopping on Impermeable Structures

Wave type: Irregular Slope type: Smooth
Rate estimate: Overtopping

Breaking criteria:	0.780				
Incident significant wave ht (Hi):	4.900	ft	Runup for significant waves (R):	6.221	ft
Peak wave period (T):	7.600		Onshore wind velocity (U):	80.000	ft/sec
COTAN of nearshore slope (cot phi):	100.000		Deepwater significant wave (Ho):	4.734	ft
Water depth at structure toe (ds):	13.800	ft	Relative height (ds/Ho):	2.915	
COTAN of structure slope (cot theta):	0.000		Wave steepness (Ho/gT^2):	0.003	
Structure height above toe (hs):	21.000	ft	Overtopping coef(alpha):	0.067	
			Overtopping coef(Q*o):	0.009	
			Overtopping rate (Q):	0.016	$ft^3/s\text{-}ft$

Case: 2030_2% FLOOD (50 YR) OVERTOPPING: DOCTORS PASS SURGE BARRIER/WALLS

Wave Runup and Overtopping on Impermeable Structures

Wave type: Irregular Slope type: Smooth
Rate estimate: Overtopping

Breaking criteria:	0.780				
Incident significant wave ht (Hi):	5.900	ft	Runup for significant waves (R):	7.735	ft
Peak wave period (T):	9.000		Onshore wind velocity (U):	80.000	ft/sec
COTAN of nearshore slope (cot phi):	100.000		Deepwater significant wave (Ho):	5.500	ft
Water depth at structure toe (ds):	15.900	ft	Relative height (ds/Ho):	2.891	
COTAN of structure slope (cot theta):	0.000		Wave steepness (Ho/gT^2):	0.002	
Structure height above toe (hs):	25.000	ft	Overtopping coef(alpha):	0.067	
			Overtopping coef(Q*o):	0.009	
			Overtopping rate (Q):	0.018	$ft^3/s\text{-}ft$

Case: 2030_1% FLOOD (100 YR) OVERTOPPING: DOCTORS PASS SURGE BARRIER/WALLS

Wave Runup and Overtopping on Impermeable Structures

Wave type:	Irregular	Slope type:	Smooth		
Rate estimate:	Overtopping				
Breaking criteria:	0.780				
Incident significant wave ht (Hi):	6.600	ft	Runup for significant waves (R):	10.293	ft
Peak wave period (T):	14.000		Onshore wind velocity (U):	80.000	ft/sec
COTAN of nearshore slope (cot phi):	100.000		Deepwater significant wave (Ho):	5.204	ft
Water depth at structure toe (ds):	17.200	ft	Relative height (ds/Ho):	3.305	
COTAN of structure slope (cot theta):	0.000		Wave steepness (Ho/gT^2):	0.001	
Structure height above toe (hs):	31.500	ft	Overtopping coef(alpha):	0.075	
			Overtopping coef(Q*o):	0.088	
			Overtopping rate (Q):	0.016	ft^3/s-ft

Case: 2079_10% FLOOD (10 YR) OVERTOPPING: DOCTORS PASS SURGE BARRIER/WALLS

Wave Runup and Overtopping on Impermeable Structures

Wave type:	Irregular	Slope type:	Smooth		
Rate estimate:	Overtopping				
Breaking criteria:	0.780				
Incident significant wave ht (Hi):	4.300	ft	Runup for significant waves (R):	5.234	ft
Peak wave period (T):	6.400		Onshore wind velocity (U):	80.000	ft/sec
COTAN of nearshore slope (cot phi):	100.000		Deepwater significant wave (Ho):	4.370	ft
Water depth at structure toe (ds):	13.400	ft	Relative height (ds/Ho):	3.066	
COTAN of structure slope (cot theta):	0.000		Wave steepness (Ho/gT^2):	0.003	
Structure height above toe (hs):	18.500	ft	Overtopping coef(alpha):	0.067	
			Overtopping coef(Q*o):	0.009	
			Overtopping rate (Q):	0.045	ft^3/s-ft

Case: 2079_5% FLOOD (20 YR) OVERTOPPING: DOCTORS PASS SURGE BARRIER/WALLS

Wave Runup and Overtopping on Impermeable Structures

Wave type:	Irregular	Slope type:	Smooth		
Rate estimate:	Overtopping				
Breaking criteria:	0.780				
Incident significant wave ht (Hi):	4.900	ft	Runup for significant waves (R):	6.116	ft
Peak wave period (T):	7.600		Onshore wind velocity (U):	80.000	ft/sec
COTAN of nearshore slope (cot phi):	100.000		Deepwater significant wave (Ho):	4.791	ft
Water depth at structure toe (ds):	14.800	ft	Relative height (ds/Ho):	3.089	
COTAN of structure slope (cot theta):	0.000		Wave steepness (Ho/gT^2):	0.003	
Structure height above toe (hs):	21.000	ft	Overtopping coef(alpha):	0.067	
			Overtopping coef(Q*o):	0.009	
			Overtopping rate (Q):	0.043	ft^3/s-ft

Case: 2079_2% FLOOD (50 YR) OVERTOPPING: DOCTORS PASS SURGE BARRIER/WALLS

Wave Runup and Overtopping on Impermeable Structures

Wave type:	Irregular	Slope type:	Smooth		
Rate estimate:	Overtopping				
Breaking criteria:	0.780				
Incident significant wave ht (Hi):	5.900	ft	Runup for significant waves (R):	7.595	ft
Peak wave period (T):	9.000		Onshore wind velocity (U):	80.000	ft/sec
COTAN of nearshore slope (cot phi):	100.000		Deepwater significant wave (Ho):	5.563	ft
Water depth at structure toe (ds):	16.900	ft	Relative height (ds/Ho):	3.038	
COTAN of structure slope (cot theta):	0.000		Wave steepness (Ho/gT^2):	0.002	
Structure height above toe (hs):	25.000	ft	Overtopping coef(alpha):	0.067	
			Overtopping coef(Q*o):	0.009	
			Overtopping rate (Q):	0.038	ft^3/s-ft

Case: 2079_1% FLOOD (100 YR) OVERTOPPING: DOCTORS PASS SURGE BARRIER/WALLS

Wave Runup and Overtopping on Impermeable Structures

Wave type:	Irregular	Slope type:	Smooth		
Rate estimate:	Overtopping				
Breaking criteria:	0.780				
Incident significant wave ht (Hi):	6.600	ft	Runup for significant waves (R):	9.942	ft
Peak wave period (T):	14.000		Onshore wind velocity (U):	80.000	ft/sec
COTAN of nearshore slope (cot phi):	100.000		Deepwater significant wave (Ho):	5.276	ft
Water depth at structure toe (ds):	18.300	ft	Relative height (ds/Ho):	3.468	
COTAN of structure slope (cot theta):	0.000		Wave steepness (Ho/gT^2):	0.001	
Structure height above toe (hs):	31.500	ft	Overtopping coef(alpha):	0.075	
			Overtopping coef(Q*o):	0.088	
			Overtopping rate (Q):	0.026	ft^3/s-ft

TAMIAMI GATE/WALLS: VERTICAL WALL

Case: 2030_5% FLOOD (20 YR) OVERTOPPING: TAMIAMI TRAIL GATE/WALLS

Wave Runup and Overtopping on Impermeable Structures

Wave type: Irregular Slope type: Smooth
Rate estimate: Overtopping

Breaking criteria:	0.780				
Incident significant wave ht (Hi):	1.800	ft	Runup for significant waves (R):	2.052	ft
Peak wave period (T):	2.300		Onshore wind velocity (U):	80.000	ft/sec
COTAN of nearshore slope (cot phi):	10.000		Deepwater significant wave (Ho):	1.832	ft
Water depth at structure toe (ds):	11.800	ft	Relative height (ds/Ho):	6.441	
COTAN of structure slope (cot theta):	0.000		Wave steepness (Ho/gT^2):	0.011	
Structure height above toe (hs):	14.000	ft	Overtopping coef(alpha):	0.070	
			Overtopping coef(Q*o):	0.007	
			Overtopping rate (Q):	0.007	$ft^3/s\text{-}ft$

Case: 2030_2% FLOOD (50 YR) OVERTOPPING: TAMIAMI TRAIL GATE/WALLS

Wave Runup and Overtopping on Impermeable Structures

Wave type: Irregular Slope type: Smooth
Rate estimate: Overtopping

Breaking criteria:	0.780				
Incident significant wave ht (Hi):	2.400	ft	Runup for significant waves (R):	2.745	ft
Peak wave period (T):	2.600		Onshore wind velocity (U):	80.000	ft/sec
COTAN of nearshore slope (cot phi):	100.000		Deepwater significant wave (Ho):	2.466	ft
Water depth at structure toe (ds):	13.400	ft	Relative height (ds/Ho):	5.434	
COTAN of structure slope (cot theta):	0.000		Wave steepness (Ho/gT^2):	0.011	
Structure height above toe (hs):	16.500	ft	Overtopping coef(alpha):	0.070	
			Overtopping coef(Q*o):	0.007	
			Overtopping rate (Q):	0.007	$ft^3/s\text{-}ft$

Case: 2030_1% FLOOD (100 YR) OVERTOPPING: TAMIAMI TRAIL GATE/WALLS

Wave Runup and Overtopping on Impermeable Structures

Wave type: Irregular Slope type: Smooth
Rate estimate: Overtopping

Breaking criteria:	0.780				
Incident significant wave ht (Hi):	2.800	ft	Runup for significant waves (R):	3.216	ft
Peak wave period (T):	2.700		Onshore wind velocity (U):	80.000	ft/sec
COTAN of nearshore slope (cot phi):	100.000		Deepwater significant wave (Ho):	2.874	ft
Water depth at structure toe (ds):	14.600	ft	Relative height (ds/Ho):	5.079	
COTAN of structure slope (cot theta):	0.000		Wave steepness (Ho/gT^2):	0.012	
Structure height above toe (hs):	18.000	ft	Overtopping coef(alpha):	0.070	
			Overtopping coef(Q*o):	0.007	
			Overtopping rate (Q):	0.015	$ft^3/s\text{-}ft$

Case: 2079_5% FLOOD (20 YR) OVERTOPPING: TAMIAMI TRAIL GATE/WALLS

Wave Runup and Overtopping on Impermeable Structures

Wave type: Irregular Slope type: Smooth
Rate estimate: Overtopping

Breaking criteria:	0.780				
Incident significant wave ht (Hi):	1.800	ft	Runup for significant waves (R):	2.051	ft
Peak wave period (T):	2.300		Onshore wind velocity (U):	80.000	ft/sec
COTAN of nearshore slope (cot phi):	10.000		Deepwater significant wave (Ho):	1.823	ft
Water depth at structure toe (ds):	12.800	ft	Relative height (ds/Ho):	7.023	
COTAN of structure slope (cot theta):	0.000		Wave steepness (Ho/gT^2):	0.011	
Structure height above toe (hs):	14.000	ft	Overtopping coef(alpha):	0.070	
			Overtopping coef(Q*o):	0.007	
			Overtopping rate (Q):	0.105	$ft^3/s\text{-}ft$

Case: 2079_2% FLOOD (50 YR) OVERTOPPING: TAMIAMI TRAIL GATE/WALLS

Wave Runup and Overtopping on Impermeable Structures

Wave type: Irregular Slope type: Smooth
Rate estimate: Overtopping

Breaking criteria:	0.780				
Incident significant wave ht (Hi):	2.400	ft	Runup for significant waves (R):	2.743	ft
Peak wave period (T):	2.600		Onshore wind velocity (U):	80.000	ft/sec
COTAN of nearshore slope (cot phi):	100.000		Deepwater significant wave (Ho):	2.451	ft
Water depth at structure toe (ds):	14.400	ft	Relative height (ds/Ho):	5.875	
COTAN of structure slope (cot theta):	0.000		Wave steepness (Ho/gT^2):	0.011	
Structure height above toe (hs):	16.500	ft	Overtopping coef(alpha):	0.070	
			Overtopping coef(Q*o):	0.007	
			Overtopping rate (Q):	0.064	$ft^3/s\text{-}ft$

Case: 2079_1% FLOOD (100 YR) OVERTOPPING: TAMIAMI TRAIL GATE/WALLS

Wave Runup and Overtopping on Impermeable Structures

Wave type: Irregular Slope type: Smooth
Rate estimate: Overtopping

Breaking criteria:	0.780				
Incident significant wave ht (Hi):	2.800	ft	Runup for significant waves (R):	3.213	ft
Peak wave period (T):	2.700		Onshore wind velocity (U):	80.000	ft/sec
COTAN of nearshore slope (cot phi):	100.000		Deepwater significant wave (Ho):	2.859	ft
Water depth at structure toe (ds):	15.600	ft	Relative height (ds/Ho):	5.457	
COTAN of structure slope (cot theta):	0.000		Wave steepness (Ho/gT^2):	0.012	
Structure height above toe (hs):	18.000	ft	Overtopping coef(alpha):	0.070	
			Overtopping coef(Q*o):	0.007	
			Overtopping rate (Q):	0.089	$ft^3/s\text{-}ft$

MARCO ISLAND REVETMENT

Case: 2030_10% FLOOD (10 YR) OVERTOPPING: MARCO ISLAND REVETMENT

Wave Runup and Overtopping on Impermeable Structures

Wave type: Irregular Slope type: Rough
Rate estimate: Overtopping

Breaking criteria:	0.780				
Incident significant wave ht (Hi):	3.700	ft	Runup for significant waves (R):	6.335	ft
Peak wave period (T):	10.600		Onshore wind velocity (U):	80.000	ft/sec
COTAN of nearshore slope (cot phi):	19.000		Deepwater significant wave (Ho):	2.965	ft
Water depth at structure toe (ds):	10.600	ft	Relative height (ds/Ho):	3.575	
COTAN of structure slope (cot theta):	2.000		Wave steepness (Ho/gT²):	0.001	
Structure height above toe (hs):	15.000	ft	Overtopping coef(alpha):	0.072	
Rough slope coefficient(a):	0.956		Overtopping coef(Q*o):	0.110	
Rough slope coefficient(b):	0.398		Overtopping rate (Q):	0.363	ft³/s-ft

Case: 2030_5% FLOOD (20 YR) OVERTOPPING: MARCO ISLAND REVETMENT

Wave Runup and Overtopping on Impermeable Structures

Wave type: Irregular Slope type: Rough
Rate estimate: Runup

Breaking criteria:	0.780				
Incident significant wave ht (Hi):	4.500	ft	Runup for significant waves (R):	7.744	ft
Peak wave period (T):	11.900		Onshore wind velocity (U):	80.000	ft/sec
COTAN of nearshore slope (cot phi):	19.000		Deepwater significant wave (Ho):	3.514	ft
Water depth at structure toe (ds):	11.900	ft	Relative height (ds/Ho):	3.386	
COTAN of structure slope (cot theta):	2.000		Wave steepness (Ho/gT²):	0.001	
Structure height above toe (hs):	17.500	ft	Overtopping coef(alpha):	0.072	
Rough slope coefficient(a):	0.956		Overtopping coef(Q*o):	0.110	
Rough slope coefficient(b):	0.398		Overtopping rate (Q):	0.401	ft³/s-ft

Case: 2030_2% FLOOD (50 YR) OVERTOPPING: MARCO ISLAND REVETMENT

Wave Runup and Overtopping on Impermeable Structures

Wave type: Irregular Slope type: Rough
Rate estimate: Overtopping

Breaking criteria:	0.780				
Incident significant wave ht (Hi):	5.400	ft	Runup for significant waves (R):	9.305	ft
Peak wave period (T):	13.100		Onshore wind velocity (U):	80.000	ft/sec
COTAN of nearshore slope (cot phi):	19.000		Deepwater significant wave (Ho):	4.169	ft
Water depth at structure toe (ds):	13.700	ft	Relative height (ds/Ho):	3.286	
COTAN of structure slope (cot theta):	2.000		Wave steepness (Ho/gT²):	0.001	
Structure height above toe (hs):	20.500	ft	Overtopping coef(alpha):	0.072	
Rough slope coefficient(a):	0.956		Overtopping coef(Q*o):	0.110	
Rough slope coefficient(b):	0.398		Overtopping rate (Q):	0.497	ft³/s-ft

Case: 2030_1% FLOOD (100 YR) OVERTOPPING: MARCO ISLAND REVETMENT

Wave Runup and Overtopping on Impermeable Structures

Wave type: Irregular Slope type: Rough
Rate estimate: Overtopping

Breaking criteria:	0.780				
Incident significant wave ht (Hi):	6.100	ft	Runup for significant waves (R):	10.506	ft
Peak wave period (T):	13.900		Onshore wind velocity (U):	80.000	ft/sec
COTAN of nearshore slope (cot phi):	19.000		Deepwater significant wave (Ho):	4.693	ft
Water depth at structure toe (ds):	15.200	ft	Relative height (ds/Ho):	3.239	
COTAN of structure slope (cot theta):	2.000		Wave steepness (Ho/gT^2):	0.001	
Structure height above toe (hs):	23.500	ft	Overtopping coef(alpha):	0.072	
Rough slope coefficient(a):	0.956		Overtopping coef(Q*o):	0.110	
Rough slope coefficient(b):	0.398		Overtopping rate (Q):	0.427	$ft^3/s\text{-}ft$

Case: 2079_10% FLOOD (10 YR) OVERTOPPING: MARCO ISLAND REVETMENT

Wave Runup and Overtopping on Impermeable Structures

Wave type: Irregular Slope type: Rough
Rate estimate: Overtopping

Breaking criteria:	0.780				
Incident significant wave ht (Hi):	3.700	ft	Runup for significant waves (R):	6.335	ft
Peak wave period (T):	10.600		Onshore wind velocity (U):	80.000	ft/sec
COTAN of nearshore slope (cot phi):	19.000		Deepwater significant wave (Ho):	3.024	ft
Water depth at structure toe (ds):	11.600	ft	Relative height (ds/Ho):	3.836	
COTAN of structure slope (cot theta):	2.000		Wave steepness (Ho/gT^2):	0.001	
Structure height above toe (hs):	15.000	ft	Overtopping coef(alpha):	0.072	
Rough slope coefficient(a):	0.956		Overtopping coef(Q*o):	0.110	
Rough slope coefficient(b):	0.398		Overtopping rate (Q):	0.843	$ft^3/s\text{-}ft$

Case: 2079_5% FLOOD (20 YR) OVERTOPPING: MARCO ISLAND REVETMENT

Wave Runup and Overtopping on Impermeable Structures

Wave type: Irregular Slope type: Rough
Rate estimate: Runup

Breaking criteria:	0.780				
Incident significant wave ht (Hi):	4.500	ft	Runup for significant waves (R):	7.744	ft
Peak wave period (T):	11.900		Onshore wind velocity (U):	80.000	ft/sec
COTAN of nearshore slope (cot phi):	19.000		Deepwater significant wave (Ho):	3.578	ft
Water depth at structure toe (ds):	12.900	ft	Relative height (ds/Ho):	3.606	
COTAN of structure slope (cot theta):	2.000		Wave steepness (Ho/gT^2):	0.001	
Structure height above toe (hs):	17.500	ft	Overtopping coef(alpha):	0.072	
Rough slope coefficient(a):	0.956		Overtopping coef(Q*o):	0.110	
Rough slope coefficient(b):	0.398		Overtopping rate (Q):	0.813	$ft^3/s\text{-}ft$

Case: 2079_2% FLOOD (50 YR) OVERTOPPING: MARCO ISLAND REVETMENT

Wave Runup and Overtopping on Impermeable Structures

Wave type: Irregular Slope type: Rough
Rate estimate: Overtopping

Breaking criteria:	0.780				
Incident significant wave ht (Hi):	5.400	ft	Runup for significant waves (R):	9.305	ft
Peak wave period (T):	13.100		Onshore wind velocity (U):	80.000	ft/sec
COTAN of nearshore slope (cot phi):	19.000		Deepwater significant wave (Ho):	4.235	ft
Water depth at structure toe (ds):	14.700	ft	Relative height (ds/Ho):	3.471	
COTAN of structure slope (cot theta):	2.000		Wave steepness (Ho/gT^2):	0.001	
Structure height above toe (hs):	20.500	ft	Overtopping coef(alpha):	0.072	
Rough slope coefficient(a):	0.956		Overtopping coef(Q*o):	0.110	
Rough slope coefficient(b):	0.398		Overtopping rate (Q):	0.901	$ft^3/s\text{-}ft$

Case: 2079_1% FLOOD (100 YR) OVERTOPPING: MARCO ISLAND REVETMENT

Wave Runup and Overtopping on Impermeable Structures

Wave type: Irregular Slope type: Rough
Rate estimate: Overtopping

Breaking criteria:	0.780				
Incident significant wave ht (Hi):	6.100	ft	Runup for significant waves (R):	10.506	ft
Peak wave period (T):	13.900		Onshore wind velocity (U):	80.000	ft/sec
COTAN of nearshore slope (cot phi):	19.000		Deepwater significant wave (Ho):	4.761	ft
Water depth at structure toe (ds):	16.200	ft	Relative height (ds/Ho):	3.403	
COTAN of structure slope (cot theta):	2.000		Wave steepness (Ho/gT^2):	0.001	
Structure height above toe (hs):	23.500	ft	Overtopping coef(alpha):	0.072	
Rough slope coefficient(a):	0.956		Overtopping coef(Q*o):	0.110	
Rough slope coefficient(b):	0.398		Overtopping rate (Q):	0.737	$ft^3/s\text{-}ft$

EUROTOP SPREADSHEETS

BONITA BEACH GATES/WALLS: VERTICAL WALL

2030_5% FLOOD (20 YR) OVERTOPPING

Wave Overtopping of Uniform Structure Slopes

The overtopping is computed based on the equations given in the EurOtop manual.

Legend
User inputs (Input Worksheet)
Intermediate Computations
Final Calculation

Input Wave and Water Level Variables from Input Sheet			
H_{m0} =	2.0000	ft	Wave Height
T_p =	2.5000	s	Wave Period
h =	7.5000	ft	Total Depth at Levee Toe
cot a =	1.0000		Seaward Slope
g_f =	1.0000		Roughness Influence Factor
g_b =	1.0000		Berm
g =	32.2000	ft/s^2	Acceleration of Gravity
b =	45.0000	deg	Wave Obliquity
	1.0000		CASE
H_s/h_B =	0.7800		Breaker Ratio for Breaker Height at xB

Input Structure Geometry from Input Sheet			
Point	x	Elevation	coords
Leeward Structure Toe	21	0	x_1, e_1
Leeward End of Crest	21	10	x_2, e_2
Seaward End of Crest	18	10	x_3, e_3
Seaward Structure Toe	18	0	x_4, e_4

Computed Variables			
$T_{m-1,0}$ =	2.2727	s	Spectral Wave Period
L_p =	26.4710	ft	Spectral Wave Length
g_f =	1.0000		Roughness Influence Coefficient
g_b =	0.8515		Wave Obliquity Influence Coefficient

Computed Overtopping q			
tan a =	1.0000		Equivalent Slope
s_p =	0.0756		Spectral Wave Steepness
ξ_m =	3.6381		Iribarren Parameter
R_c =	2.5000	ft	Freeboard
Det q =	0.1097	ft^3/s/ft	Overtopping
max q =	0.1097	ft^3/s/ft	Maximum Overtopping

0.0102 m^3/s/m

Determinitstic Equations

$$\frac{q}{\sqrt{gH_{m0}^3}} = \frac{0.067}{\sqrt{\tan\alpha}}\gamma_b \xi_{m-1,0} \exp\left(-4.3\frac{R_c}{\xi_{m-1,0}H_{m0}\gamma_b\gamma_f\gamma_\beta\gamma_v}\right)$$

$$\frac{q}{\sqrt{gH_{m0}^3}} < 0.2 \cdot \exp\left(-2.3\frac{R_c}{H_{m0}\gamma_f\gamma_\beta}\right)$$

Wave overtopping for short-crested waves

$\gamma_\beta = 1 - 0.0033\,|\beta|$ $\quad 0° \le |\beta| \le 80°$

$\gamma_\beta = 1 - 0.0033\,(80)$ $\quad |\beta| > 80°$

Probabilistic Equations

Computed Mean Overtopping q			
Prob q =	0.1097	ft^3/s/ft	Overtopping
	0.0706	ft^3/s/ft	Maximum Overtopping

0.0102 m^3/s/m

Probabilistic Equations

$$\frac{q}{\sqrt{gH_{m0}^3}} = \frac{0.067}{\sqrt{\tan\alpha}}\gamma_b \xi_{m-1,0} \exp\left(-4.75\frac{R_c}{\xi_{m-1,0}H_{m0}\gamma_b\gamma_f\gamma_\beta\gamma_v}\right)$$

$$\frac{q}{\sqrt{gH_{m0}^3}} < 0.2 \cdot \exp\left(-2.6\frac{R_c}{H_{m0}\gamma_f\gamma_\beta}\right)$$

Uncertainty

μ = 4.75, σ = 0.5

μ = 2.6, σ = 0.35

2030_2% FLOOD (50 YR) OVERTOPPING

Wave Overtopping of Uniform Structure Slopes

The overtopping is computed based on the equations given in the EurOtop manual.

Legend
User inputs (Input Worksheet)
Intermediate Computations
Final Calculation

Input Wave and Water Level Variables from Input Sheet			
H_{m0} =	2.8000	ft	Wave Height
T_p =	2.9000	s	Wave Period
h =	9.3000	ft	Total Depth at Levee Toe
cot a =	1.0000		Seaward Slope
g_f =	1.0000		Roughness Influence Factor
g_b =	1.0000		Berm
g =	32.2000	ft/s^2	Acceleration of Gravity
b =	45.0000	deg	Wave Obliquity
	1.0000		CASE
H_s/h_B =	0.7800		Breaker Ratio for Breaker Height at xB

Input Structure Geometry from Input Sheet			
Point	x	Elevation	coords
Leeward Structure Toe	21	0	x_1, e_1
Leeward End of Crest	21	13	x_2, e_2
Seaward End of Crest	18	13	x_3, e_3
Seaward Structure Toe	18	0	x_4, e_4

Computed Variables			
$T_{m-1,0}$ =	2.6364	s	Spectral Wave Period
L_p =	26.4710	ft	Spectral Wave Length
g_f =	1.0000		Roughness Influence Coefficient
g_b =	0.8515		Wave Obliquity Influence Coefficient

Computed Overtopping q			
tan a =	1.0000		Equivalent Slope
s_p =	0.0756		Spectral Wave Steepness
ξ_m =	3.6381		Iribarren Parameter
R_c =	3.7000	ft	Freeboard
Det q =	0.1498	ft^3/s/ft	Overtopping
max q =	0.1498	ft^3/s/ft	Maximum Overtopping

0.0139 m^3/s/m

Determinitstic Equations

$$\frac{q}{\sqrt{gH_{m0}^3}} = \frac{0.067}{\sqrt{\tan\alpha}}\gamma_b\xi_{m-1,0}\exp\left(-4.3\frac{R_c}{\xi_{m-1,0}H_{m0}\gamma_b\gamma_f\gamma_\beta\gamma_v}\right)$$

$$\frac{q}{\sqrt{gH_{m0}^3}} < 0.2\cdot\exp\left(-2.3\frac{R_c}{H_{m0}\gamma_f\gamma_\beta}\right)$$

Wave overtopping for short-crested waves

$\gamma_\beta = 1 - 0.0033\,|\beta|$ $\quad 0° \le |\beta| \le 80°$

$\gamma_\beta = 1 - 0.0033\,(80)$ $\quad |\beta| > 80°$

Probabilistic Equations

Computed Mean Overtopping q			
Prob q =	0.1498	ft^3/s/ft	Overtopping
	0.0941	ft^3/s/ft	Maximum Overtopping

0.0139 m^3/s/m

Probabilistic Equations

$$\frac{q}{\sqrt{gH_{m0}^3}} = \frac{0.067}{\sqrt{\tan\alpha}}\gamma_b\xi_{m-1,0}\exp\left(-4.75\frac{R_c}{\xi_{m-1,0}H_{m0}\gamma_b\gamma_f\gamma_\beta\gamma_v}\right)$$

$$\frac{q}{\sqrt{gH_{m0}^3}} < 0.2\cdot\exp\left(-2.6\frac{R_c}{H_{m0}\gamma_f\gamma_\beta}\right)$$

Uncertainty

μ = 4.75, σ = 0.5

μ = 2.6, σ = 0.35

2030_1% FLOOD (100 YR) OVERTOPPING

Wave Overtopping of Uniform Structure Slopes

The overtopping is computed based on the equations given in the EurOtop manual.

Legend
User inputs (Input Worksheet)
Intermediate Computations
Final Calculation

Input Wave and Water Level Variables from Input Sheet			
H_{m0} =	3.5000	ft	Wave Height
T_p =	3.1000	s	Wave Period
h =	10.9000	ft	Total Depth at Levee Toe
cot a =	1.0000		Seaward Slope
g_f =	1.0000		Roughness Influence Factor
g_b =	1.0000		Berm
g =	32.2000	ft/s^2	Acceleration of Gravity
b =	45.0000	deg	Wave Obliquity
	1.0000		CASE
H_{s}/h_{s} =	0.7800		Breaker Ratio for Breaker Height at xB

Input Structure Geometry from Input Sheet			
Point	x	Elevation	coords
Leeward Structure Toe	21	0	x_1, e_1
Leeward End of Crest	21	15.5	x_2, e_2
Seaward End of Crest	18	15.5	x_3, e_3
Seaward Structure Toe	18	0	x_4, e_4

Computed Variables			
$T_{m-1,0}$ =	2.8182	s	Spectral Wave Period
L_p =	26.4710	ft	Spectral Wave Length
g_f =	1.0000		Roughness Influence Coefficient
g_b =	0.8515		Wave Obliquity Influence Coefficient

Computed Overtopping q			
tan a =	1.0000		Equivalent Slope
s_p =	0.0756		Spectral Wave Steepness
ξ_m =	3.6381		Iribarren Parameter
R_c =	4.6000	ft	Freeboard
Det q =	0.2135	ft^3/s/ft	Overtopping
max q =	0.2135	ft^3/s/ft	Maximum Overtopping

0.0198 m^3/s/m

Determinitstic Equations

$$\frac{q}{\sqrt{gH_{m0}^3}} = \frac{0.067}{\sqrt{\tan\alpha}}\gamma_b\xi_{m-1,0}\exp\left(-4.3\frac{R_c}{\xi_{m-1,0}H_{m0}\gamma_b\gamma_f\gamma_\beta\gamma_v}\right)$$

$$\frac{q}{\sqrt{gH_{m0}^3}} < 0.2\cdot\exp\left(-2.3\frac{R_c}{H_{m0}\gamma_f\gamma_\beta}\right)$$

Wave overtopping for short-crested waves

$\gamma_\beta = 1 - 0.0033\,|\beta|$ $\quad 0° \le |\beta| \le 80°$

$\gamma_\beta = 1 - 0.0033\,(80)$ $\quad |\beta| > 80°$

Probabilistic Equations

Computed Mean Overtopping q			
Prob q =	0.2135	ft^3/s/ft	Overtopping
	0.1343	ft^3/s/ft	Maximum Overtopping

0.0198 m^3/s/m

Probabilistic Equations

$$\frac{q}{\sqrt{gH_{m0}^3}} = \frac{0.067}{\sqrt{\tan\alpha}}\gamma_b\xi_{m-1,0}\exp\left(-4.75\frac{R_c}{\xi_{m-1,0}H_{m0}\gamma_b\gamma_f\gamma_\beta\gamma_v}\right)$$

$$\frac{q}{\sqrt{gH_{m0}^3}} < 0.2\cdot\exp\left(-2.6\frac{R_c}{H_{m0}\gamma_f\gamma_\beta}\right)$$

Uncertainty

μ = 4.75, σ = 0.5

μ = 2.6, σ = 0.35

2079_5% FLOOD (20 YR) OVERTOPPING

Wave Overtopping of Uniform Structure Slopes

The overtopping is computed based on the equations given in the EurOtop manual.

Legend
User inputs (Input Worksheet)
Intermediate Computations
Final Calculation

Input Wave and Water Level Variables from Input Sheet			
H_{m0} =	2.0000	ft	Wave Height
T_p =	2.5000	s	Wave Period
h =	8.5000	ft	Total Depth at Levee Toe
cot a =	1.0000		Seaward Slope
g_f =	1.0000		Roughness Influence Factor
g_b =	1.0000		Berm
g =	32.2000	ft/s^2	Acceleration of Gravity
b =	45.0000	deg	Wave Obliquity
	1.0000		CASE
H_s/h_B =	0.7800		Breaker Ratio for Breaker Height at xB

Input Structure Geometry from Input Sheet			
Point	x	Elevation	coords
Leeward Structure Toe	21	0	x_1, e_1
Leeward End of Crest	21	10	x_2, e_2
Seaward End of Crest	18	10	x_3, e_3
Seaward Structure Toe	18	0	x_4, e_4

Computed Variables			
$T_{m-1,0}$ =	2.2727	s	Spectral Wave Period
L_p =	26.4710	ft	Spectral Wave Length
g_f =	1.0000		Roughness Influence Coefficient
g_b =	0.8515		Wave Obliquity Influence Coefficient

Computed Overtopping q			
tan a =	1.0000		Equivalent Slope
s_p =	0.0756		Spectral Wave Steepness
x_b =	3.6381		Iribarren Parameter
R_c =	1.5000	ft	Freeboard
Det q =	0.4233	ft^3/s/ft	Overtopping
max q =	0.4233	ft^3/s/ft	Maximum Overtopping

0.0393 m^3/s/m

Determinitstic Equations

$$\frac{q}{\sqrt{gH_{m0}^3}} = \frac{0.067}{\sqrt{\tan\alpha}}\gamma_b\xi_{m-1,0}\exp\left(-4.3\frac{R_c}{\xi_{m-1,0}H_{m0}\gamma_b\gamma_f\gamma_\beta\gamma_v}\right)$$

$$\frac{q}{\sqrt{gH_{m0}^3}} < 0.2\cdot\exp\left(-2.3\frac{R_c}{H_{m0}\gamma_f\gamma_\beta}\right)$$

Wave overtopping for short-crested waves

$\gamma_\beta = 1 - 0.0033\,|\beta|$ $\quad 0° \le |\beta| \le 80°$

$\gamma_\beta = 1 - 0.0033\,(80)$ $\quad |\beta| > 80°$

Probabilistic Equations

Computed Mean Overtopping q			
Prob q =	0.4233	ft^3/s/ft	Overtopping
	0.3250	ft^3/s/ft	Maximum Overtopping

0.0393 m^3/s/m

Probabilistic Equations

$$\frac{q}{\sqrt{gH_{m0}^3}} = \frac{0.067}{\sqrt{\tan\alpha}}\gamma_b\xi_{m-1,0}\exp\left(-4.75\frac{R_c}{\xi_{m-1,0}H_{m0}\gamma_b\gamma_f\gamma_\beta\gamma_v}\right)$$

$$\frac{q}{\sqrt{gH_{m0}^3}} < 0.2\cdot\exp\left(-2.6\frac{R_c}{H_{m0}\gamma_f\gamma_\beta}\right)$$

Uncertainty

μ = 4.75, σ = 0.5

μ = 2.6, σ = 0.35

2079_2% FLOOD (50 YR) OVERTOPPING

Wave Overtopping of Uniform Structure Slopes

The overtopping is computed based on the equations given in the EurOtop manual.

Legend
User inputs (Input Worksheet)
Intermediate Computations
Final Calculation

Input Wave and Water Level Variables from Input Sheet			
H_{m0} =	2.8000	ft	Wave Height
T_p =	2.9000	s	Wave Period
h =	10.3000	ft	Total Depth at Levee Toe
cot a =	1.0000		Seaward Slope
g_f =	1.0000		Roughness Influence Factor
g_b =	1.0000		Berm
g =	32.2000	ft/s^2	Acceleration of Gravity
b =	45.0000	deg	Wave Obliquity
	1.0000		CASE
H_{pl}/h_p =	0.7800		Breaker Ratio for Breaker Height at xB

Input Structure Geometry from Input Sheet			
Point	x	Elevation	coords
Leeward Structure Toe	21	0	x_1, e_1
Leeward End of Crest	21	13	x_2, e_2
Seaward End of Crest	18	13	x_3, e_3
Seaward Structure Toe	18	0	x_4, e_4

Computed Variables			
$T_{m-1,0}$ =	2.6364	s	Spectral Wave Period
L_p =	26.4710	ft	Spectral Wave Length
g_f =	1.0000		Roughness Influence Coefficient
g_b =	0.8515		Wave Obliquity Influence Coefficient

Computed Overtopping q			
tan a =	1.0000		Equivalent Slope
s_p =	0.0756		Spectral Wave Steepness
x_b =	3.6381		Iribarren Parameter
R_c =	2.7000	ft	Freeboard
Det q =	0.3931	ft^3/s/ft	Overtopping
max q =	0.3931	ft^3/s/ft	Maximum Overtopping

0.0365 m^3/s/m

Determinitstic Equations

$$\frac{q}{\sqrt{gH_{m0}^3}} = \frac{0.067}{\sqrt{\tan\alpha}}\gamma_b\xi_{m-1,0}\exp\left(-4.3\frac{R_c}{\xi_{m-1,0}H_{m0}\gamma_b\gamma_f\gamma_\beta\gamma_v}\right)$$

$$\frac{q}{\sqrt{gH_{m0}^3}} < 0.2\cdot\exp\left(-2.3\frac{R_c}{H_{m0}\gamma_f\gamma_\beta}\right)$$

Wave overtopping for short-crested waves

$\gamma_\beta = 1 - 0.0033\,|\beta|$ $\quad 0° \le |\beta| \le 80°$

$\gamma_\beta = 1 - 0.0033\,(80)$ $\quad |\beta| > 80°$

Probabilistic Equations

Computed Mean Overtopping q			
Prob q =	0.3931	ft^3/s/ft	Overtopping
	0.2799	ft^3/s/ft	Maximum Overtopping

0.0365 m^3/s/m

Probabilistic Equations

$$\frac{q}{\sqrt{gH_{m0}^3}} = \frac{0.067}{\sqrt{\tan\alpha}}\gamma_b\xi_{m-1,0}\exp\left(-4.75\frac{R_c}{\xi_{m-1,0}H_{m0}\gamma_b\gamma_f\gamma_\beta\gamma_v}\right)$$

$$\frac{q}{\sqrt{gH_{m0}^3}} < 0.2\cdot\exp\left(-2.6\frac{R_c}{H_{m0}\gamma_f\gamma_\beta}\right)$$

Uncertainty

μ = 4.75, σ = 0.5

μ = 2.6, σ = 0.35

2079_1% FLOOD (100 YR) OVERTOPPING

Wave Overtopping of Uniform Structure Slopes

The overtopping is computed based on the equations given in the EurOtop manual.

Legend
User inputs (Input Worksheet)
Intermediate Computations
Final Calculation

Input Wave and Water Level Variables from Input Sheet			
H_{m0} =	3.5000	ft	Wave Height
T_p =	3.1000	s	Wave Period
h =	11.9000	ft	Total Depth at Levee Toe
cot a =	1.0000		Seaward Slope
g_f =	1.0000		Roughness Influence Factor
g_b =	1.0000		Berm
g =	32.2000	ft/s^2	Acceleration of Gravity
b =	45.0000	deg	Wave Obliquity
	1.0000		CASE
H_{s}/h_{s} =	0.7800		Breaker Ratio for Breaker Height at xB

Input Structure Geometry from Input Sheet			
Point	x	Elevation	coords
Leeward Structure Toe	21	0	x_1, e_1
Leeward End of Crest	21	15.5	x_2, e_2
Seaward End of Crest	18	15.5	x_3, e_3
Seaward Structure Toe	18	0	x_4, e_4

Computed Variables			
$T_{m-1,0}$ =	2.8182	s	Spectral Wave Period
L_p =	26.4710	ft	Spectral Wave Length
g_f =	1.0000		Roughness Influence Coefficient
g_b =	0.8515		Wave Obliquity Influence Coefficient

Computed Overtopping q			
tan a =	1.0000		Equivalent Slope
s_p =	0.0756		Spectral Wave Steepness
ξ_{m} =	3.6381		Iribarren Parameter
R_c =	3.6000	ft	Freeboard
Det q =	0.4618	ft^3/s/ft	Overtopping
max q =	0.4618	ft^3/s/ft	Maximum Overtopping

0.0429 m^3/s/m

Determinitstic Equations

$$\frac{q}{\sqrt{gH_{m0}^3}} = \frac{0.067}{\sqrt{\tan\alpha}}\gamma_b\xi_{m-1,0}\exp\left(-4.3\frac{R_c}{\xi_{m-1,0}H_{m0}\gamma_b\gamma_f\gamma_\beta\gamma_v}\right)$$

$$\frac{q}{\sqrt{gH_{m0}^3}} < 0.2\cdot\exp\left(-2.3\frac{R_c}{H_{m0}\gamma_f\gamma_\beta}\right)$$

Wave overtopping for short-crested waves

$\gamma_\beta = 1 - 0.0033\,|\beta|$ $\quad 0° \le |\beta| \le 80°$

$\gamma_\beta = 1 - 0.0033\,(80)$ $\quad |\beta| > 80°$

Probabilistic Equations

Computed Mean Overtopping q			
Prob q =	0.4618	ft^3/s/ft	Overtopping
	0.3214	ft^3/s/ft	Maximum Overtopping

0.0429 m^3/s/m

Probabilistic Equations

$$\frac{q}{\sqrt{gH_{m0}^3}} = \frac{0.067}{\sqrt{\tan\alpha}}\gamma_b\xi_{m-1,0}\exp\left(-4.75\frac{R_c}{\xi_{m-1,0}H_{m0}\gamma_b\gamma_f\gamma_\beta\gamma_v}\right)$$

$$\frac{q}{\sqrt{gH_{m0}^3}} < 0.2\cdot\exp\left(-2.6\frac{R_c}{H_{m0}\gamma_f\gamma_\beta}\right)$$

Uncertainty

μ = 4.75, σ = 0.5

μ = 2.6, σ = 0.35

WIGGINS PASS SURGE BARRIER/WALLS: VERTICAL WALL

2030_10% FLOOD (10 YR) OVERTOPPING

Wave Overtopping of Uniform Structure Slopes

The overtopping is computed based on the equations given in the EurOtop manual.

Legend
User inputs (Input Worksheet)
Intermediate Computations
Final Calculation

Input Wave and Water Level Variables from Input Sheet			
H_{m0} =	4.1000	ft	Wave Height
T_p =	11.7000	s	Wave Period
h =	13.1000	ft	Total Depth at Levee Toe
cot a =	1.0000		Seaward Slope
g_f =	1.0000		Roughness Influence Factor
g_b =	1.0000		Berm
g =	32.2000	ft/s^2	Acceleration of Gravity
b =	45.0000	deg	Wave Obliquity
	1.0000		CASE
H_s/h_B =	0.7800		Breaker Ratio for Breaker Height at xB

Input Structure Geometry from Input Sheet			
Point	x	Elevation	coords
Leeward Structure Toe	21	0	x_1, e_1
Leeward End of Crest	21	21	x_2, e_2
Seaward End of Crest	18	21	x_3, e_3
Seaward Structure Toe	18	0	x_4, e_4

Computed Variables			
$T_{m-1,0}$ =	10.6364	s	Spectral Wave Period
L_p =	26.4710	ft	Spectral Wave Length
g_f =	1.0000		Roughness Influence Coefficient
g_b =	0.8515		Wave Obliquity Influence Coefficient

Computed Overtopping q			
tan a =	1.0000		Equivalent Slope
s_p =	0.0756		Spectral Wave Steepness
ξ_m =	3.6381		Iribarren Parameter
R_c =	7.9000	ft	Freeboard
Det q =	0.0517	ft^3/s/ft	Overtopping
max q =	0.0517	ft^3/s/ft	Maximum Overtopping

0.0048 m^3/s/m

Determinitstic Equations

$$\frac{q}{\sqrt{gH_{m0}^3}} = \frac{0.067}{\sqrt{\tan\alpha}}\gamma_b\xi_{m-1,0}\exp\left(-4.3\frac{R_c}{\xi_{m-1,0}H_{m0}\gamma_b\gamma_f\gamma_\beta\gamma_v}\right)$$

$$\frac{q}{\sqrt{gH_{m0}^3}} < 0.2\cdot\exp\left(-2.3\frac{R_c}{H_{m0}\gamma_f\gamma_\beta}\right)$$

Wave overtopping for short-crested waves

$\gamma_\beta = 1 - 0.0033\,|\beta|$ $\quad 0° \le |\beta| \le 80°$

$\gamma_\beta = 1 - 0.0033\,(80)$ $\quad |\beta| > 80°$

Probabilistic Equations

Computed Mean Overtopping q			
Prob q =	0.0517	ft^3/s/ft	Overtopping
	0.0262	ft^3/s/ft	Maximum Overtopping

0.0048 m^3/s/m

Probabilistic Equations

$$\frac{q}{\sqrt{gH_{m0}^3}} = \frac{0.067}{\sqrt{\tan\alpha}}\gamma_b\xi_{m-1,0}\exp\left(-4.75\frac{R_c}{\xi_{m-1,0}H_{m0}\gamma_b\gamma_f\gamma_\beta\gamma_v}\right)$$

$$\frac{q}{\sqrt{gH_{m0}^3}} < 0.2\cdot\exp\left(-2.6\frac{R_c}{H_{m0}\gamma_f\gamma_\beta}\right)$$

Uncertainty

$\mu = 4.75,\ \sigma = 0.5$

$\mu = 2.6,\ \sigma = 0.35$

2030_5% FLOOD (20 YR) OVERTOPPING

Wave Overtopping of Uniform Structure Slopes

The overtopping is computed based on the equations given in the EurOtop manual.

Legend
User inputs (Input Worksheet)
Intermediate Computations
Final Calculation

Input Wave and Water Level Variables from Input Sheet			
H_{m0} =	4.9000	ft	Wave Height
T_p =	13.1000	s	Wave Period
h =	14.6000	ft	Total Depth at Levee Toe
cot a =	1.0000		Seaward Slope
g_f =	1.0000		Roughness Influence Factor
g_b =	1.0000		Berm
g =	32.2000	ft/s^2	Acceleration of Gravity
b =	45.0000	deg	Wave Obliquity
	1.0000		CASE
H_{s}/h_{s} =	0.7800		Breaker Ratio for Breaker Height at xB

Input Structure Geometry from Input Sheet			
Point	x	Elevation	coords
Leeward Structure Toe	21	0	x_1, e_1
Leeward End of Crest	21	24.5	x_2, e_2
Seaward End of Crest	18	24.5	x_3, e_3
Seaward Structure Toe	18	0	x_4, e_4

Computed Variables			
$T_{m-1,0}$ =	11.9091	s	Spectral Wave Period
L_p =	26.4710	ft	Spectral Wave Length
g_f =	1.0000		Roughness Influence Coefficient
g_b =	0.8515		Wave Obliquity Influence Coefficient

Computed Overtopping q			
tan a =	1.0000		Equivalent Slope
s_p =	0.0756		Spectral Wave Steepness
ξ_m =	3.6381		Iribarren Parameter
R_c =	9.9000	ft	Freeboard
Det q =	0.0525	ft^3/s/ft	Overtopping
max q =	0.0525	ft^3/s/ft	Maximum Overtopping

0.0049 m^3/s/m

Determinitstic Equations

$$\frac{q}{\sqrt{gH_{m0}^3}} = \frac{0.067}{\sqrt{\tan\alpha}}\gamma_b\xi_{m-1,0}\exp\left(-4.3\frac{R_c}{\xi_{m-1,0}H_{m0}\gamma_b\gamma_f\gamma_\beta\gamma_v}\right)$$

$$\frac{q}{\sqrt{gH_{m0}^3}} < 0.2\cdot\exp\left(-2.3\frac{R_c}{H_{m0}\gamma_f\gamma_\beta}\right)$$

Wave overtopping for short-crested waves

$\gamma_\beta = 1 - 0.0033\,|\beta|$ $\quad 0° \le |\beta| \le 80°$

$\gamma_\beta = 1 - 0.0033\,(80)$ $\quad |\beta| > 80°$

Probabilistic Equations

Computed Mean Overtopping q			
Prob q =	0.0525	ft^3/s/ft	Overtopping
	0.0258	ft^3/s/ft	Maximum Overtopping

0.0049 m^3/s/m

Probabilistic Equations

$$\frac{q}{\sqrt{gH_{m0}^3}} = \frac{0.067}{\sqrt{\tan\alpha}}\gamma_b\xi_{m-1,0}\exp\left(-4.75\frac{R_c}{\xi_{m-1,0}H_{m0}\gamma_b\gamma_f\gamma_\beta\gamma_v}\right)$$

$$\frac{q}{\sqrt{gH_{m0}^3}} < 0.2\cdot\exp\left(-2.6\frac{R_c}{H_{m0}\gamma_f\gamma_\beta}\right)$$

Uncertainty

μ = 4.75, σ = 0.5

μ = 2.6, σ = 0.35

2030_2% FLOOD (50 YR) OVERTOPPING

Wave Overtopping of Uniform Structure Slopes

The overtopping is computed based on the equations given in the EurOtop manual.

Legend
User inputs (Input Worksheet)
Intermediate Computations
Final Calculation

Input Wave and Water Level Variables from Input Sheet			
H_{m0} =	6.0000	ft	Wave Height
T_p =	14.7000	s	Wave Period
h =	16.7000	ft	Total Depth at Levee Toe
cot a =	1.0000		Seaward Slope
g_f =	1.0000		Roughness Influence Factor
g_b =	1.0000		Berm
g =	32.2000	ft/s^2	Acceleration of Gravity
b =	45.0000	deg	Wave Obliquity
	1.0000		CASE
H_{s}/h_{s} =	0.7800		Breaker Ratio for Breaker Height at xB

Input Structure Geometry from Input Sheet			
Point	x	Elevation	coords
Leeward Structure Toe	21	0	x_1, e_1
Leeward End of Crest	21	29.5	x_2, e_2
Seaward End of Crest	18	29.5	x_3, e_3
Seaward Structure Toe	18	0	x_4, e_4

Computed Variables			
$T_{m-1,0}$ =	13.3636	s	Spectral Wave Period
L_p =	26.4710	ft	Spectral Wave Length
g_f =	1.0000		Roughness Influence Coefficient
g_b =	0.8515		Wave Obliquity Influence Coefficient

Computed Overtopping q			
tan a =	1.0000		Equivalent Slope
s_p =	0.0756		Spectral Wave Steepness
ξ_m =	3.6381		Iribarren Parameter
R_c =	12.8000	ft	Freeboard
Det q =	0.0524	ft^3/s/ft	Overtopping
max q =	0.0524	ft^3/s/ft	Maximum Overtopping

0.0049 m^3/s/m

Determinitstic Equations

$$\frac{q}{\sqrt{gH_{m0}^3}} = \frac{0.067}{\sqrt{\tan\alpha}}\gamma_b\xi_{m-1,0}\exp\left(-4.3\frac{R_c}{\xi_{m-1,0}H_{m0}\gamma_b\gamma_f\gamma_\beta\gamma_v}\right)$$

$$\frac{q}{\sqrt{gH_{m0}^3}} < 0.2\cdot\exp\left(-2.3\frac{R_c}{H_{m0}\gamma_f\gamma_\beta}\right)$$

Wave overtopping for short-crested waves

$\gamma_\beta = 1 - 0.0033\,|\beta|$ $\quad 0° \le |\beta| \le 80°$

$\gamma_\beta = 1 - 0.0033\,(80)$ $\quad |\beta| > 80°$

Probabilistic Equations

Computed Mean Overtopping q			
Prob q =	0.0524	ft^3/s/ft	Overtopping
	0.0247	ft^3/s/ft	Maximum Overtopping

0.0049 m^3/s/m

Probabilistic Equations

$$\frac{q}{\sqrt{gH_{m0}^3}} = \frac{0.067}{\sqrt{\tan\alpha}}\gamma_b\xi_{m-1,0}\exp\left(-4.75\frac{R_c}{\xi_{m-1,0}H_{m0}\gamma_b\gamma_f\gamma_\beta\gamma_v}\right)$$

$$\frac{q}{\sqrt{gH_{m0}^3}} < 0.2\cdot\exp\left(-2.6\frac{R_c}{H_{m0}\gamma_f\gamma_\beta}\right)$$

Uncertainty

μ = 4.75, σ = 0.5

μ = 2.6, σ = 0.35

2030_1% FLOOD (100 YR) OVERTOPPING

Wave Overtopping of Uniform Structure Slopes

The overtopping is computed based on the equations given in the EurOtop manual.

Legend
User inputs (Input Worksheet)
Intermediate Computations
Final Calculation

Input Wave and Water Level Variables from Input Sheet			
H_{m0} =	6.8000	ft	Wave Height
T_p =	15.7000	s	Wave Period
h =	18.3000	ft	Total Depth at Levee Toe
cot a =	1.0000		Seaward Slope
g_f =	1.0000		Roughness Influence Factor
g_b =	1.0000		Berm
g =	32.2000	ft/s^2	Acceleration of Gravity
b =	45.0000	deg	Wave Obliquity
	1.0000		CASE
H_{s}/h_{s} =	0.7800		Breaker Ratio for Breaker Height at xB

Input Structure Geometry from Input Sheet			
Point	x	Elevation	coords
Leeward Structure Toe	21	0	x_1, e_1
Leeward End of Crest	21	33.5	x_2, e_2
Seaward End of Crest	18	33.5	x_3, e_3
Seaward Structure Toe	18	0	x_4, e_4

Computed Variables			
$T_{m-1,0}$ =	14.2727	s	Spectral Wave Period
L_p =	26.4710	ft	Spectral Wave Length
g_f =	1.0000		Roughness Influence Coefficient
g_b =	0.8515		Wave Obliquity Influence Coefficient

Computed Overtopping q			
tan a =	1.0000		Equivalent Slope
s_p =	0.0756		Spectral Wave Steepness
x_b =	3.6381		Iribarren Parameter
R_c =	15.2000	ft	Freeboard
Det q =	0.0480	ft^3/s/ft	Overtopping
max q =	0.0480	ft^3/s/ft	Maximum Overtopping

0.0045 m^3/s/m

Determinitstic Equations

$$\frac{q}{\sqrt{gH_{m0}^3}} = \frac{0.067}{\sqrt{\tan\alpha}}\gamma_b\xi_{m-1,0}\exp\left(-4.3\frac{R_c}{\xi_{m-1,0}H_{m0}\gamma_b\gamma_f\gamma_\beta\gamma_v}\right)$$

$$\frac{q}{\sqrt{gH_{m0}^3}} < 0.2\cdot\exp\left(-2.3\frac{R_c}{H_{m0}\gamma_f\gamma_\beta}\right)$$

Wave overtopping for short-crested waves

$\gamma_\beta = 1 - 0.0033\,|\beta|$ $\quad 0° \le |\beta| \le 80°$

$\gamma_\beta = 1 - 0.0033\,(80)$ $\quad |\beta| > 80°$

Probabilistic Equations

Computed Mean Overtopping q			
Prob q =	0.0480	ft^3/s/ft	Overtopping
	0.0219	ft^3/s/ft	Maximum Overtopping

0.0045 m^3/s/m

Probabilistic Equations

$$\frac{q}{\sqrt{gH_{m0}^3}} = \frac{0.067}{\sqrt{\tan\alpha}}\gamma_b\xi_{m-1,0}\exp\left(-4.75\frac{R_c}{\xi_{m-1,0}H_{m0}\gamma_b\gamma_f\gamma_\beta\gamma_v}\right)$$

$$\frac{q}{\sqrt{gH_{m0}^3}} < 0.2\cdot\exp\left(-2.6\frac{R_c}{H_{m0}\gamma_f\gamma_\beta}\right)$$

Uncertainty

μ = 4.75, σ = 0.5

μ = 2.6, σ = 0.35

2079_10% FLOOD (10 YR) OVERTOPPING

Wave Overtopping of Uniform Structure Slopes

The overtopping is computed based on the equations given in the EurOtop manual.

Legend
User inputs (Input Worksheet)
Intermediate Computations
Final Calculation

Input Wave and Water Level Variables from Input Sheet			
H_{m0} =	4.1000	ft	Wave Height
T_p =	11.7000	s	Wave Period
h =	14.1000	ft	Total Depth at Levee Toe
cot a =	1.0000		Seaward Slope
g_f =	1.0000		Roughness Influence Factor
g_b =	1.0000		Berm
g =	32.2000	ft/s^2	Acceleration of Gravity
b =	45.0000	deg	Wave Obliquity
	1.0000		CASE
H_{m0}/h_B =	0.7800		Breaker Ratio for Breaker Height at xB

Input Structure Geometry from Input Sheet			
Point	x	Elevation	coords
Leeward Structure Toe	21	0	x_1, e_1
Leeward End of Crest	21	21	x_2, e_2
Seaward End of Crest	18	21	x_3, e_3
Seaward Structure Toe	18	0	x_4, e_4

Computed Variables			
$T_{m-1,0}$ =	10.6364	s	Spectral Wave Period
L_p =	26.4710	ft	Spectral Wave Length
g_f =	1.0000		Roughness Influence Coefficient
g_b =	0.8515		Wave Obliquity Influence Coefficient

Computed Overtopping q			
tan a =	1.0000		Equivalent Slope
s_p =	0.0756		Spectral Wave Steepness
$\xi_{m-1,0}$ =	3.6381		Iribarren Parameter
R_c =	6.9000	ft	Freeboard
Det q =	0.1000	ft^3/s/ft	Overtopping
max q =	0.1000	ft^3/s/ft	Maximum Overtopping

0.0093 m^3/s/m

Determinitstic Equations

$$\frac{q}{\sqrt{gH_{m0}^3}} = \frac{0.067}{\sqrt{\tan\alpha}}\gamma_b\xi_{m-1,0}\exp\left(-4.3\frac{R_c}{\xi_{m-1,0}H_{m0}\gamma_b\gamma_f\gamma_\beta\gamma_v}\right)$$

$$\frac{q}{\sqrt{gH_{m0}^3}} < 0.2\cdot\exp\left(-2.3\frac{R_c}{H_{m0}\gamma_f\gamma_\beta}\right)$$

Wave overtopping for short-crested waves

$\gamma_\beta = 1 - 0.0033\,|\beta|$ $\quad 0° \le |\beta| \le 80°$

$\gamma_\beta = 1 - 0.0033\,(80)$ $\quad |\beta| > 80°$

Probabilistic Equations

Computed Mean Overtopping q			
Prob q =	0.1000	ft^3/s/ft	Overtopping
	0.0553	ft^3/s/ft	Maximum Overtopping

0.0093 m^3/s/m

Probabilistic Equations

$$\frac{q}{\sqrt{gH_{m0}^3}} = \frac{0.067}{\sqrt{\tan\alpha}}\gamma_b\xi_{m-1,0}\exp\left(-4.75\frac{R_c}{\xi_{m-1,0}H_{m0}\gamma_b\gamma_f\gamma_\beta\gamma_v}\right)$$

$$\frac{q}{\sqrt{gH_{m0}^3}} < 0.2\cdot\exp\left(-2.6\frac{R_c}{H_{m0}\gamma_f\gamma_\beta}\right)$$

Uncertainty

μ = 4.75, σ = 0.5

μ = 2.6, σ = 0.35

2079_5% FLOOD (20 YR) OVERTOPPING

Wave Overtopping of Uniform Structure Slopes

The overtopping is computed based on the equations given in the EurOtop manual.

Legend
User inputs (Input Worksheet)
Intermediate Computations
Final Calculation

Input Wave and Water Level Variables from Input Sheet			
H_{m0} =	4.9000	ft	Wave Height
T_p =	13.1000	s	Wave Period
h =	15.6000	ft	Total Depth at Levee Toe
cot a =	1.0000		Seaward Slope
g_f =	1.0000		Roughness Influence Factor
g_b =	1.0000		Berm
g =	32.2000	ft/s^2	Acceleration of Gravity
b =	45.0000	deg	Wave Obliquity
	1.0000		CASE
H_{s}/h_{s} =	0.7800		Breaker Ratio for Breaker Height at xB

Input Structure Geometry from Input Sheet			
Point	x	Elevation	coords
Leeward Structure Toe	21	0	x_1, e_1
Leeward End of Crest	21	24.5	x_2, e_2
Seaward End of Crest	18	24.5	x_3, e_3
Seaward Structure Toe	18	0	x_4, e_4

Computed Variables			
$T_{m-1,0}$ =	11.9091	s	Spectral Wave Period
L_p =	26.4710	ft	Spectral Wave Length
g_f =	1.0000		Roughness Influence Coefficient
g_b =	0.8515		Wave Obliquity Influence Coefficient

Computed Overtopping q			
tan a =	1.0000		Equivalent Slope
s_p =	0.0756		Spectral Wave Steepness
x_b =	3.6381		Iribarren Parameter
R_c =	8.9000	ft	Freeboard
Det q =	0.0911	ft^3/s/ft	Overtopping
max q =	0.0911	ft^3/s/ft	Maximum Overtopping

0.0085 m^3/s/m

Determinitstic Equations

$$\frac{q}{\sqrt{gH_{m0}^3}} = \frac{0.067}{\sqrt{\tan\alpha}}\gamma_b\xi_{m-1,0}\exp\left(-4.3\frac{R_c}{\xi_{m-1,0}H_{m0}\gamma_b\gamma_f\gamma_\beta\gamma_v}\right)$$

$$\frac{q}{\sqrt{gH_{m0}^3}} < 0.2\cdot\exp\left(-2.3\frac{R_c}{H_{m0}\gamma_f\gamma_\beta}\right)$$

Wave overtopping for short-crested waves

$\gamma_\beta = 1 - 0.0033\,|\beta|$ $\quad 0° \le |\beta| \le 80°$

$\gamma_\beta = 1 - 0.0033\,(80)$ $\quad |\beta| > 80°$

Probabilistic Equations

Computed Mean Overtopping q			
Prob q =	0.0911	ft^3/s/ft	Overtopping
	0.0480	ft^3/s/ft	Maximum Overtopping

0.0085 m^3/s/m

Probabilistic Equations

$$\frac{q}{\sqrt{gH_{m0}^3}} = \frac{0.067}{\sqrt{\tan\alpha}}\gamma_b\xi_{m-1,0}\exp\left(-4.75\frac{R_c}{\xi_{m-1,0}H_{m0}\gamma_b\gamma_f\gamma_\beta\gamma_v}\right)$$

$$\frac{q}{\sqrt{gH_{m0}^3}} < 0.2\cdot\exp\left(-2.6\frac{R_c}{H_{m0}\gamma_f\gamma_\beta}\right)$$

Uncertainty

μ = 4.75, σ = 0.5

μ = 2.6, σ = 0.35

2079_2% FLOOD (50 YR) OVERTOPPING

Wave Overtopping of Uniform Structure Slopes

The overtopping is computed based on the equations given in the EurOtop manual.

Legend
User inputs (Input Worksheet)
Intermediate Computations
Final Calculation

Input Wave and Water Level Variables from Input Sheet			
H_{m0} =	6.0000	ft	Wave Height
T_p =	14.7000	s	Wave Period
h =	17.7000	ft	Total Depth at Levee Toe
cot a =	1.0000		Seaward Slope
g_f =	1.0000		Roughness Influence Factor
g_b =	1.0000		Berm
g =	32.2000	ft/s^2	Acceleration of Gravity
b =	45.0000	deg	Wave Obliquity
	1.0000		CASE
H_{s}/h_{s} =	0.7800		Breaker Ratio for Breaker Height at xB

Input Structure Geometry from Input Sheet			
Point	x	Elevation	coords
Leeward Structure Toe	21	0	x_1, e_1
Leeward End of Crest	21	29.5	x_2, e_2
Seaward End of Crest	18	29.5	x_3, e_3
Seaward Structure Toe	18	0	x_4, e_4

Computed Variables			
$T_{m-1,0}$ =	13.3636	s	Spectral Wave Period
L_p =	26.4710	ft	Spectral Wave Length
g_f =	1.0000		Roughness Influence Coefficient
g_b =	0.8515		Wave Obliquity Influence Coefficient

Computed Overtopping q			
tan a =	1.0000		Equivalent Slope
s_p =	0.0756		Spectral Wave Steepness
x_b =	3.6381		Iribarren Parameter
R_c =	11.8000	ft	Freeboard
Det q =	0.0822	ft^3/s/ft	Overtopping
max q =	0.0822	ft^3/s/ft	Maximum Overtopping

0.0076 m^3/s/m

Determinitstic Equations

$$\frac{q}{\sqrt{gH_{m0}^3}} = \frac{0.067}{\sqrt{\tan\alpha}}\gamma_b\xi_{m-1,0}\exp\left(-4.3\frac{R_c}{\xi_{m-1,0}H_{m0}\gamma_b\gamma_f\gamma_\beta\gamma_v}\right)$$

$$\frac{q}{\sqrt{gH_{m0}^3}} < 0.2\cdot\exp\left(-2.3\frac{R_c}{H_{m0}\gamma_f\gamma_\beta}\right)$$

Wave overtopping for short-crested waves

$\gamma_\beta = 1 - 0.0033\,|\beta|$ $\quad 0° \le |\beta| \le 80°$

$\gamma_\beta = 1 - 0.0033\,(80)$ $\quad |\beta| > 80°$

Probabilistic Equations

Computed Mean Overtopping q			
Prob q =	0.0822	ft^3/s/ft	Overtopping
	0.0411	ft^3/s/ft	Maximum Overtopping

0.0076 m^3/s/m

Probabilistic Equations

$$\frac{q}{\sqrt{gH_{m0}^3}} = \frac{0.067}{\sqrt{\tan\alpha}}\gamma_b\xi_{m-1,0}\exp\left(-4.75\frac{R_c}{\xi_{m-1,0}H_{m0}\gamma_b\gamma_f\gamma_\beta\gamma_v}\right)$$

$$\frac{q}{\sqrt{gH_{m0}^3}} < 0.2\cdot\exp\left(-2.6\frac{R_c}{H_{m0}\gamma_f\gamma_\beta}\right)$$

Uncertainty

μ = 4.75, σ = 0.5

μ = 2.6, σ = 0.35

2079_1% FLOOD (100 YR) OVERTOPPING

Wave Overtopping of Uniform Structure Slopes

The overtopping is computed based on the equations given in the EurOtop manual.

Legend
User inputs (Input Worksheet)
Intermediate Computations
Final Calculation

Input Wave and Water Level Variables from Input Sheet			
H_{m0} =	6.8000	ft	Wave Height
T_p =	15.7000	s	Wave Period
h =	19.4000	ft	Total Depth at Levee Toe
cot a =	1.0000		Seaward Slope
g_f =	1.0000		Roughness Influence Factor
g_b =	1.0000		Berm
g =	32.2000	ft/s^2	Acceleration of Gravity
b =	45.0000	deg	Wave Obliquity
	1.0000		CASE
H_{s}/h_{s} =	0.7800		Breaker Ratio for Breaker Height at xB

Input Structure Geometry from Input Sheet			
Point	x	Elevation	coords
Leeward Structure Toe	21	0	x_1, e_1
Leeward End of Crest	21	33.5	x_2, e_2
Seaward End of Crest	18	33.5	x_3, e_3
Seaward Structure Toe	18	0	x_4, e_4

Computed Variables			
$T_{m-1,0}$ =	14.2727	s	Spectral Wave Period
L_p =	26.4710	ft	Spectral Wave Length
g_f =	1.0000		Roughness Influence Coefficient
g_b =	0.8515		Wave Obliquity Influence Coefficient

Computed Overtopping q			
tan a =	1.0000		Equivalent Slope
s_p =	0.0756		Spectral Wave Steepness
ξ_m =	3.6381		Iribarren Parameter
R_c =	14.1000	ft	Freeboard
Det q =	0.0744	ft^3/s/ft	Overtopping
max q =	0.0744	ft^3/s/ft	Maximum Overtopping

0.0069 m^3/s/m

Determinitstic Equations

$$\frac{q}{\sqrt{gH_{m0}^3}} = \frac{0.067}{\sqrt{\tan\alpha}}\gamma_b\xi_{m-1,0}\exp\left(-4.3\frac{R_c}{\xi_{m-1,0}H_{m0}\gamma_b\gamma_f\gamma_\beta\gamma_v}\right)$$

$$\frac{q}{\sqrt{gH_{m0}^3}} < 0.2\cdot\exp\left(-2.3\frac{R_c}{H_{m0}\gamma_f\gamma_\beta}\right)$$

Wave overtopping for short-crested waves

$\gamma_\beta = 1 - 0.0033\,|\beta|$ $\quad 0° \le |\beta| \le 80°$

$\gamma_\beta = 1 - 0.0033\,(80)$ $\quad |\beta| > 80°$

Probabilistic Equations

Computed Mean Overtopping q			
Prob q =	0.0744	ft^3/s/ft	Overtopping
	0.0358	ft^3/s/ft	Maximum Overtopping

0.0069 m^3/s/m

Probabilistic Equations

$$\frac{q}{\sqrt{gH_{m0}^3}} = \frac{0.067}{\sqrt{\tan\alpha}}\gamma_b\xi_{m-1,0}\exp\left(-4.75\frac{R_c}{\xi_{m-1,0}H_{m0}\gamma_b\gamma_f\gamma_\beta\gamma_v}\right)$$

$$\frac{q}{\sqrt{gH_{m0}^3}} < 0.2\cdot\exp\left(-2.6\frac{R_c}{H_{m0}\gamma_f\gamma_\beta}\right)$$

Uncertainty

μ = 4.75, σ = 0.5

μ = 2.6, σ = 0.35

SEAGATE GATE/WALLS: VERTICAL WALL

2030_5% FLOOD (20 YR) OVERTOPPING

Wave Overtopping of Uniform Structure Slopes

The overtopping is computed based on the equations given in the EurOtop manual.

Legend
User inputs (Input Worksheet)
Intermediate Computations
Final Calculation

Input Wave and Water Level Variables from Input Sheet			
H_{m0} =	1.9000	ft	Wave Height
T_p =	2.4000	s	Wave Period
h =	9.6000	ft	Total Depth at Levee Toe
cot a =	1.0000		Seaward Slope
g_f =	1.0000		Roughness Influence Factor
g_b =	1.0000		Berm
g =	32.2000	ft/s^2	Acceleration of Gravity
b =	45.0000	deg	Wave Obliquity
	1.0000		CASE
H_{pl}/h_p =	0.7800		Breaker Ratio for Breaker Height at xB

Input Structure Geometry from Input Sheet			
Point	x	Elevation	coords
Leeward Structure Toe	21	0	x_1, e_1
Leeward End of Crest	21	12	x_2, e_2
Seaward End of Crest	18	12	x_3, e_3
Seaward Structure Toe	18	0	x_4, e_4

Computed Variables			
$T_{m-1,0}$ =	2.1818	s	Spectral Wave Period
L_p =	26.4710	ft	Spectral Wave Length
g_f =	1.0000		Roughness Influence Coefficient
g_b =	0.8515		Wave Obliquity Influence Coefficient

Computed Overtopping q			
tan a =	1.0000		Equivalent Slope
s_p =	0.0756		Spectral Wave Steepness
x_a =	3.6381		Iribarren Parameter
R_c =	2.4000	ft	Freeboard
Det q =	0.0980	ft^3/s/ft	Overtopping
max q =	0.0980	ft^3/s/ft	Maximum Overtopping

0.0091 m^3/s/m

Determinitstic Equations

$$\frac{q}{\sqrt{gH_{m0}^3}} = \frac{0.067}{\sqrt{\tan\alpha}}\gamma_b \xi_{m-1,0} \exp\left(-4.3\frac{R_c}{\xi_{m-1,0}H_{m0}\gamma_b\gamma_f\gamma_\beta\gamma_v}\right)$$

$$\frac{q}{\sqrt{gH_{m0}^3}} < 0.2\cdot\exp\left(-2.3\frac{R_c}{H_{m0}\gamma_f\gamma_\beta}\right)$$

Wave overtopping for short-crested waves

$\gamma_\beta = 1 - 0.0033\,|\beta|$ $\quad 0° \le |\beta| \le 80°$

$\gamma_\beta = 1 - 0.0033\,(80)$ $\quad |\beta| > 80°$

Probabilistic Equations

Computed Mean Overtopping q			
Prob q =	0.0980	ft^3/s/ft	Overtopping
	0.0628	ft^3/s/ft	Maximum Overtopping

0.0091 m^3/s/m

Probabilistic Equations

$$\frac{q}{\sqrt{gH_{m0}^3}} = \frac{0.067}{\sqrt{\tan\alpha}}\gamma_b \xi_{m-1,0} \exp\left(-4.75\frac{R_c}{\xi_{m-1,0}H_{m0}\gamma_b\gamma_f\gamma_\beta\gamma_v}\right)$$

$$\frac{q}{\sqrt{gH_{m0}^3}} < 0.2\cdot\exp\left(-2.6\frac{R_c}{H_{m0}\gamma_f\gamma_\beta}\right)$$

Uncertainty

μ = 4.75, σ = 0.5

μ = 2.6, σ = 0.35

2030_2% FLOOD (50 YR) OVERTOPPING

Wave Overtopping of Uniform Structure Slopes

The overtopping is computed based on the equations given in the EurOtop manual.

Legend
User inputs (Input Worksheet)
Intermediate Computations
Final Calculation

Input Wave and Water Level Variables from Input Sheet			
H_{m0} =	2.4000	ft	Wave Height
T_p =	2.6000	s	Wave Period
h =	11.8000	ft	Total Depth at Levee Toe
cot a =	1.0000		Seaward Slope
g_f =	1.0000		Roughness Influence Factor
g_b =	1.0000		Berm
g =	32.2000	ft/s^2	Acceleration of Gravity
b =	45.0000	deg	Wave Obliquity
	1.0000		CASE
H_{m0}/h_B =	0.7800		Breaker Ratio for Breaker Height at xB

Input Structure Geometry from Input Sheet			
Point	x	Elevation	coords
Leeward Structure Toe	21	0	x_1, e_1
Leeward End of Crest	21	14.5	x_2, e_2
Seaward End of Crest	18	14.5	x_3, e_3
Seaward Structure Toe	18	0	x_4, e_4

Computed Variables			
$T_{m-1,0}$ =	2.3636	s	Spectral Wave Period
L_p =	26.4710	ft	Spectral Wave Length
g_f =	1.0000		Roughness Influence Coefficient
g_b =	0.8515		Wave Obliquity Influence Coefficient

Computed Overtopping q			
tan a =	1.0000		Equivalent Slope
s_p =	0.0756		Spectral Wave Steepness
$\xi_{m-1,0}$ =	3.6381		Iribarren Parameter
R_c =	2.7000	ft	Freeboard
Det q =	0.2021	ft^3/s/ft	Overtopping
max q =	0.2021	ft^3/s/ft	Maximum Overtopping

0.0188 m^3/s/m

Determinitstic Equations

$$\frac{q}{\sqrt{gH_{m0}^3}} = \frac{0.067}{\sqrt{\tan\alpha}}\gamma_b\xi_{m-1,0}\exp\left(-4.3\frac{R_c}{\xi_{m-1,0}H_{m0}\gamma_b\gamma_f\gamma_\beta\gamma_v}\right)$$

$$\frac{q}{\sqrt{gH_{m0}^3}} < 0.2\cdot\exp\left(-2.3\frac{R_c}{H_{m0}\gamma_f\gamma_\beta}\right)$$

Wave overtopping for short-crested waves

$\gamma_\beta = 1 - 0.0033\,|\beta|$ $\quad 0° \le |\beta| \le 80°$

$\gamma_\beta = 1 - 0.0033\,(80)$ $\quad |\beta| > 80°$

Probabilistic Equations

Computed Mean Overtopping q			
Prob q =	0.2021	ft^3/s/ft	Overtopping
	0.1360	ft^3/s/ft	Maximum Overtopping

0.0188 m^3/s/m

Probabilistic Equations

$$\frac{q}{\sqrt{gH_{m0}^3}} = \frac{0.067}{\sqrt{\tan\alpha}}\gamma_b\xi_{m-1,0}\exp\left(-4.75\frac{R_c}{\xi_{m-1,0}H_{m0}\gamma_b\gamma_f\gamma_\beta\gamma_v}\right)$$

$$\frac{q}{\sqrt{gH_{m0}^3}} < 0.2\cdot\exp\left(-2.6\frac{R_c}{H_{m0}\gamma_f\gamma_\beta}\right)$$

Uncertainty

μ = 4.75, σ = 0.5

μ = 2.6, σ = 0.35

2030_1% FLOOD (100 YR) OVERTOPPING

Wave Overtopping of Uniform Structure Slopes

The overtopping is computed based on the equations given in the EurOtop manual.

Legend
User inputs (Input Worksheet)
Intermediate Computations
Final Calculation

Input Wave and Water Level Variables from Input Sheet			
H_{m0} =	2.9000	ft	Wave Height
T_p =	2.8000	s	Wave Period
h =	13.2000	ft	Total Depth at Levee Toe
cot a =	1.0000		Seaward Slope
g_f =	1.0000		Roughness Influence Factor
g_b =	1.0000		Berm
g =	32.2000	ft/s^2	Acceleration of Gravity
b =	45.0000	deg	Wave Obliquity
	1.0000		CASE
H_{p1}/h_p =	0.7800		Breaker Ratio for Breaker Height at xB

Input Structure Geometry from Input Sheet			
Point	x	Elevation	coords
Leeward Structure Toe	21	0	x_1, e_1
Leeward End of Crest	21	17	x_2, e_2
Seaward End of Crest	18	17	x_3, e_3
Seaward Structure Toe	18	0	x_4, e_4

Computed Variables			
$T_{m-1,0}$ =	2.5455	s	Spectral Wave Period
L_p =	26.4710	ft	Spectral Wave Length
g_f =	1.0000		Roughness Influence Coefficient
g_b =	0.8515		Wave Obliquity Influence Coefficient

Computed Overtopping q			
tan a =	1.0000		Equivalent Slope
s_p =	0.0756		Spectral Wave Steepness
x_b =	3.6381		Iribarren Parameter
R_c =	3.8000	ft	Freeboard
Det q =	0.1627	ft^3/s/ft	Overtopping
max q =	0.1627	ft^3/s/ft	Maximum Overtopping

0.0151 m^3/s/m

Determinitstic Equations

$$\frac{q}{\sqrt{gH_{m0}^3}} = \frac{0.067}{\sqrt{\tan\alpha}}\gamma_b\xi_{m-1,0}\exp\left(-4.3\frac{R_c}{\xi_{m-1,0}H_{m0}\gamma_b\gamma_f\gamma_\beta\gamma_v}\right)$$

$$\frac{q}{\sqrt{gH_{m0}^3}} < 0.2\cdot\exp\left(-2.3\frac{R_c}{H_{m0}\gamma_f\gamma_\beta}\right)$$

Wave overtopping for short-crested waves

$\gamma_\beta = 1 - 0.0033\,|\beta|$ $\quad 0° \le |\beta| \le 80°$

$\gamma_\beta = 1 - 0.0033\,(80)$ $\quad |\beta| > 80°$

Probabilistic Equations

Computed Mean Overtopping q			
Prob q =	0.1627	ft^3/s/ft	Overtopping
	0.1025	ft^3/s/ft	Maximum Overtopping

0.0151 m^3/s/m

Probabilistic Equations

$$\frac{q}{\sqrt{gH_{m0}^3}} = \frac{0.067}{\sqrt{\tan\alpha}}\gamma_b\xi_{m-1,0}\exp\left(-4.75\frac{R_c}{\xi_{m-1,0}H_{m0}\gamma_b\gamma_f\gamma_\beta\gamma_v}\right)$$

$$\frac{q}{\sqrt{gH_{m0}^3}} < 0.2\cdot\exp\left(-2.6\frac{R_c}{H_{m0}\gamma_f\gamma_\beta}\right)$$

Uncertainty

μ = 4.75, σ = 0.5

μ = 2.6, σ = 0.35

2079_5% FLOOD (20 YR) OVERTOPPING

Wave Overtopping of Uniform Structure Slopes

The overtopping is computed based on the equations given in the EurOtop manual.

Legend
User inputs (Input Worksheet)
Intermediate Computations
Final Calculation

Input Wave and Water Level Variables from Input Sheet			
H_{m0} =	1.9000	ft	Wave Height
T_p =	2.4000	s	Wave Period
h =	10.6000	ft	Total Depth at Levee Toe
cot a =	1.0000		Seaward Slope
g_f =	1.0000		Roughness Influence Factor
g_b =	1.0000		Berm
g =	32.2000	ft/s^2	Acceleration of Gravity
b =	45.0000	deg	Wave Obliquity
	1.0000		CASE
H_{s1}/h_B =	0.7800		Breaker Ratio for Breaker Height at xB

Input Structure Geometry from Input Sheet			
Point	x	Elevation	coords
Leeward Structure Toe	21	0	x_1, e_1
Leeward End of Crest	21	12	x_2, e_2
Seaward End of Crest	18	12	x_3, e_3
Seaward Structure Toe	18	0	x_4, e_4

Computed Variables			
$T_{m-1,0}$ =	2.1818	s	Spectral Wave Period
L_p =	26.4710	ft	Spectral Wave Length
g_f =	1.0000		Roughness Influence Coefficient
g_b =	0.8515		Wave Obliquity Influence Coefficient

Computed Overtopping q			
tan a =	1.0000		Equivalent Slope
s_p =	0.0756		Spectral Wave Steepness
ξ_m =	3.6381		Iribarren Parameter
R_c =	1.4000	ft	Freeboard
Det q =	0.4062	ft^3/s/ft	Overtopping
max q =	0.4062	ft^3/s/ft	Maximum Overtopping

0.0377 m^3/s/m

Determinitstic Equations

$$\frac{q}{\sqrt{gH_{m0}^3}} = \frac{0.067}{\sqrt{\tan\alpha}}\gamma_b\xi_{m-1,0}\exp\left(-4.3\frac{R_c}{\xi_{m-1,0}H_{m0}\gamma_b\gamma_f\gamma_\beta\gamma_v}\right)$$

$$\frac{q}{\sqrt{gH_{m0}^3}} < 0.2\cdot\exp\left(-2.3\frac{R_c}{H_{m0}\gamma_f\gamma_\beta}\right)$$

Wave overtopping for short-crested waves

$\gamma_\beta = 1 - 0.0033\,|\beta|$ $\quad 0° \le |\beta| \le 80°$

$\gamma_\beta = 1 - 0.0033\,(80)$ $\quad |\beta| > 80°$

Probabilistic Equations

Computed Mean Overtopping q			
Prob q =	0.4062	ft^3/s/ft	Overtopping
	0.3133	ft^3/s/ft	Maximum Overtopping

0.0377 m^3/s/m

Probabilistic Equations

$$\frac{q}{\sqrt{gH_{m0}^3}} = \frac{0.067}{\sqrt{\tan\alpha}}\gamma_b\xi_{m-1,0}\exp\left(-4.75\frac{R_c}{\xi_{m-1,0}H_{m0}\gamma_b\gamma_f\gamma_\beta\gamma_v}\right)$$

$$\frac{q}{\sqrt{gH_{m0}^3}} < 0.2\cdot\exp\left(-2.6\frac{R_c}{H_{m0}\gamma_f\gamma_\beta}\right)$$

Uncertainty

μ = 4.75, σ = 0.5

μ = 2.6, σ = 0.35

2079_2% FLOOD (50 YR) OVERTOPPING

Wave Overtopping of Uniform Structure Slopes

The overtopping is computed based on the equations given in the EurOtop manual.

Legend
User inputs (Input Worksheet)
Intermediate Computations
Final Calculation

Input Wave and Water Level Variables from Input Sheet			
H_{m0} =	2.4000	ft	Wave Height
T_p =	2.6000	s	Wave Period
h =	12.8000	ft	Total Depth at Levee Toe
cot a =	1.0000		Seaward Slope
g_f =	1.0000		Roughness Influence Factor
g_b =	1.0000		Berm
g =	32.2000	ft/s^2	Acceleration of Gravity
b =	45.0000	deg	Wave Obliquity
	1.0000		CASE
H_{m0}/h_B =	0.7800		Breaker Ratio for Breaker Height at xB

Input Structure Geometry from Input Sheet			
Point	x	Elevation	coords
Leeward Structure Toe	21	0	x_1, e_1
Leeward End of Crest	21	14.5	x_2, e_2
Seaward End of Crest	18	14.5	x_3, e_3
Seaward Structure Toe	18	0	x_4, e_4

Computed Variables			
$T_{m-1,0}$ =	2.3636	s	Spectral Wave Period
L_p =	26.4710	ft	Spectral Wave Length
g_f =	1.0000		Roughness Influence Coefficient
g_b =	0.8515		Wave Obliquity Influence Coefficient

Computed Overtopping q			
tan a =	1.0000		Equivalent Slope
s_p =	0.0756		Spectral Wave Steepness
ξ_{m} =	3.6381		Iribarren Parameter
R_c =	1.7000	ft	Freeboard
Det q =	0.6228	ft^3/s/ft	Overtopping
max q =	0.6228	ft^3/s/ft	Maximum Overtopping

0.0579 m^3/s/m

Determinitstic Equations

$$\frac{q}{\sqrt{gH_{m0}^3}} = \frac{0.067}{\sqrt{\tan\alpha}}\gamma_b\xi_{m-1,0}\exp\left(-4.3\frac{R_c}{\xi_{m-1,0}H_{m0}\gamma_b\gamma_f\gamma_\beta\gamma_v}\right)$$

$$\frac{q}{\sqrt{gH_{m0}^3}} < 0.2\cdot\exp\left(-2.3\frac{R_c}{H_{m0}\gamma_f\gamma_\beta}\right)$$

Wave overtopping for short-crested waves

$\gamma_\beta = 1 - 0.0033\,|\beta|$ $\quad 0° \le |\beta| \le 80°$

$\gamma_\beta = 1 - 0.0033\,(80)$ $\quad |\beta| > 80°$

Probabilistic Equations

Computed Mean Overtopping q			
Prob q =	0.6228	ft^3/s/ft	Overtopping
	0.4852	ft^3/s/ft	Maximum Overtopping

0.0579 m^3/s/m

Probabilistic Equations

$$\frac{q}{\sqrt{gH_{m0}^3}} = \frac{0.067}{\sqrt{\tan\alpha}}\gamma_b\xi_{m-1,0}\exp\left(-4.75\frac{R_c}{\xi_{m-1,0}H_{m0}\gamma_b\gamma_f\gamma_\beta\gamma_v}\right)$$

$$\frac{q}{\sqrt{gH_{m0}^3}} < 0.2\cdot\exp\left(-2.6\frac{R_c}{H_{m0}\gamma_f\gamma_\beta}\right)$$

Uncertainty

μ = 4.75, σ = 0.5

μ = 2.6, σ = 0.35

2079_1% FLOOD (100 YR) OVERTOPPING

Wave Overtopping of Uniform Structure Slopes

The overtopping is computed based on the equations given in the EurOtop manual.

Legend
User inputs (Input Worksheet)
Intermediate Computations
Final Calculation

Input Wave and Water Level Variables from Input Sheet			
H_{m0} =	2.9000	ft	Wave Height
T_p =	2.8000	s	Wave Period
h =	14.2000	ft	Total Depth at Levee Toe
cot a =	1.0000		Seaward Slope
g_f =	1.0000		Roughness Influence Factor
g_b =	1.0000		Berm
g =	32.2000	ft/s^2	Acceleration of Gravity
b =	45.0000	deg	Wave Obliquity
	1.0000		CASE
H_{p}/h_{p} =	0.7800		Breaker Ratio for Breaker Height at xB

Input Structure Geometry from Input Sheet			
Point	x	Elevation	coords
Leeward Structure Toe	21	0	x_1, e_1
Leeward End of Crest	21	17	x_2, e_2
Seaward End of Crest	18	17	x_3, e_3
Seaward Structure Toe	18	0	x_4, e_4

Computed Variables			
$T_{m-1,0}$ =	2.5455	s	Spectral Wave Period
L_p =	26.4710	ft	Spectral Wave Length
g_f =	1.0000		Roughness Influence Coefficient
g_b =	0.8515		Wave Obliquity Influence Coefficient

Computed Overtopping q			
tan a =	1.0000		Equivalent Slope
s_p =	0.0756		Spectral Wave Steepness
ξ_m =	3.6381		Iribarren Parameter
R_c =	2.8000	ft	Freeboard
Det q =	0.4130	ft^3/s/ft	Overtopping
max q =	0.4130	ft^3/s/ft	Maximum Overtopping

0.0384 m^3/s/m

Determinitstic Equations

$$\frac{q}{\sqrt{gH_{m0}^3}} = \frac{0.067}{\sqrt{\tan\alpha}}\gamma_b\xi_{m-1,0}\exp\left(-4.3\frac{R_c}{\xi_{m-1,0}H_{m0}\gamma_b\gamma_f\gamma_\beta\gamma_v}\right)$$

$$\frac{q}{\sqrt{gH_{m0}^3}} < 0.2\cdot\exp\left(-2.3\frac{R_c}{H_{m0}\gamma_f\gamma_\beta}\right)$$

Wave overtopping for short-crested waves

$\gamma_\beta = 1 - 0.0033\,|\beta|$ $\quad 0° \le |\beta| \le 80°$

$\gamma_\beta = 1 - 0.0033\,(80)$ $\quad |\beta| > 80°$

Probabilistic Equations

Computed Mean Overtopping q			
Prob q =	0.4130	ft^3/s/ft	Overtopping
	0.2939	ft^3/s/ft	Maximum Overtopping

0.0384 m^3/s/m

Probabilistic Equations

$$\frac{q}{\sqrt{gH_{m0}^3}} = \frac{0.067}{\sqrt{\tan\alpha}}\gamma_b\xi_{m-1,0}\exp\left(-4.75\frac{R_c}{\xi_{m-1,0}H_{m0}\gamma_b\gamma_f\gamma_\beta\gamma_v}\right)$$

$$\frac{q}{\sqrt{gH_{m0}^3}} < 0.2\cdot\exp\left(-2.6\frac{R_c}{H_{m0}\gamma_f\gamma_\beta}\right)$$

Uncertainty

μ = 4.75, σ = 0.5

μ = 2.6, σ = 0.35

DOCTORS PASS SURGE BARRIER/WALLS: VERTICAL WALL

2030_10% FLOOD (10 YR) OVERTOPPING

Wave Overtopping of Uniform Structure Slopes

The overtopping is computed based on the equations given in the EurOtop manual.

Legend
User inputs (Input Worksheet)
Intermediate Computations
Final Calculation

Input Wave and Water Level Variables from Input Sheet			
H_{m0} =	4.3000	ft	Wave Height
T_p =	6.4000	s	Wave Period
h =	12.3000	ft	Total Depth at Levee Toe
cot a =	1.0000		Seaward Slope
g_f =	1.0000		Roughness Influence Factor
g_b =	1.0000		Berm
g =	32.2000	ft/s^2	Acceleration of Gravity
b =	45.0000	deg	Wave Obliquity
	1.0000		CASE
H_{pl}/h_p =	0.7800		Breaker Ratio for Breaker Height at xB

Input Structure Geometry from Input Sheet			
Point	x	Elevation	coords
Leeward Structure Toe	21	0	x_1, e_1
Leeward End of Crest	21	18.5	x_2, e_2
Seaward End of Crest	18	18.5	x_3, e_3
Seaward Structure Toe	18	0	x_4, e_4

Computed Variables			
$T_{m-1,0}$ =	5.8182	s	Spectral Wave Period
L_p =	26.4710	ft	Spectral Wave Length
g_f =	1.0000		Roughness Influence Coefficient
g_b =	0.8515		Wave Obliquity Influence Coefficient

Computed Overtopping q			
tan a =	1.0000		Equivalent Slope
s_p =	0.0756		Spectral Wave Steepness
ξ_m =	3.6381		Iribarren Parameter
R_c =	6.2000	ft	Freeboard
Det q =	0.2059	ft^3/s/ft	Overtopping
max q =	0.2059	ft^3/s/ft	Maximum Overtopping

0.0191 m^3/s/m

Determinitstic Equations

$$\frac{q}{\sqrt{gH_{m0}^3}} = \frac{0.067}{\sqrt{\tan\alpha}}\gamma_b\xi_{m-1,0}\exp\left(-4.3\frac{R_c}{\xi_{m-1,0}H_{m0}\gamma_b\gamma_f\gamma_\beta\gamma_v}\right)$$

$$\frac{q}{\sqrt{gH_{m0}^3}} < 0.2\cdot\exp\left(-2.3\frac{R_c}{H_{m0}\gamma_f\gamma_\beta}\right)$$

Wave overtopping for short-crested waves

$\gamma_\beta = 1 - 0.0033\,|\beta|$ $\quad 0° \le |\beta| \le 80°$

$\gamma_\beta = 1 - 0.0033\,(80)$ $\quad |\beta| > 80°$

Probabilistic Equations

Computed Mean Overtopping q			
Prob q =	0.2059	ft^3/s/ft	Overtopping
	0.1239	ft^3/s/ft	Maximum Overtopping

0.0191 m^3/s/m

Probabilistic Equations

$$\frac{q}{\sqrt{gH_{m0}^3}} = \frac{0.067}{\sqrt{\tan\alpha}}\gamma_b\xi_{m-1,0}\exp\left(-4.75\frac{R_c}{\xi_{m-1,0}H_{m0}\gamma_b\gamma_f\gamma_\beta\gamma_v}\right)$$

$$\frac{q}{\sqrt{gH_{m0}^3}} < 0.2\cdot\exp\left(-2.6\frac{R_c}{H_{m0}\gamma_f\gamma_\beta}\right)$$

Uncertainty

μ = 4.75, σ = 0.5

μ = 2.6, σ = 0.35

2030_5% FLOOD (20 YR) OVERTOPPING

Wave Overtopping of Uniform Structure Slopes

The overtopping is computed based on the equations given in the EurOtop manual.

Legend
User inputs (Input Worksheet)
Intermediate Computations
Final Calculation

Input Wave and Water Level Variables from Input Sheet			
H_{m0} =	4.9000	ft	Wave Height
T_p =	7.6000	s	Wave Period
h =	13.8000	ft	Total Depth at Levee Toe
cot a =	1.0000		Seaward Slope
g_f =	1.0000		Roughness Influence Factor
g_b =	1.0000		Berm
g =	32.2000	ft/s^2	Acceleration of Gravity
b =	45.0000	deg	Wave Obliquity
	1.0000		CASE
H_{m0}/h_B =	0.7800		Breaker Ratio for Breaker Height at xB

Input Structure Geometry from Input Sheet			
Point	x	Elevation	coords
Leeward Structure Toe	21	0	x_1, e_1
Leeward End of Crest	21	21	x_2, e_2
Seaward End of Crest	18	21	x_3, e_3
Seaward Structure Toe	18	0	x_4, e_4

Computed Variables			
$T_{m-1,0}$ =	6.9091	s	Spectral Wave Period
L_p =	26.4710	ft	Spectral Wave Length
g_f =	1.0000		Roughness Influence Coefficient
g_b =	0.8515		Wave Obliquity Influence Coefficient

Computed Overtopping q			
tan a =	1.0000		Equivalent Slope
s_p =	0.0756		Spectral Wave Steepness
ξ_m =	3.6381		Iribarren Parameter
R_c =	7.2000	ft	Freeboard
Det q =	0.2326	ft^3/s/ft	Overtopping
max q =	0.2326	ft^3/s/ft	Maximum Overtopping

0.0216 m^3/s/m

Determinitstic Equations

$$\frac{q}{\sqrt{gH_{m0}^3}} = \frac{0.067}{\sqrt{\tan\alpha}}\gamma_b\xi_{m-1,0}\exp\left(-4.3\frac{R_c}{\xi_{m-1,0}H_{m0}\gamma_b\gamma_f\gamma_\beta\gamma_v}\right)$$

$$\frac{q}{\sqrt{gH_{m0}^3}} < 0.2\cdot\exp\left(-2.3\frac{R_c}{H_{m0}\gamma_f\gamma_\beta}\right)$$

Wave overtopping for short-crested waves

$\gamma_\beta = 1 - 0.0033\,|\beta|$ $\quad 0° \le |\beta| \le 80°$

$\gamma_\beta = 1 - 0.0033\,(80)$ $\quad |\beta| > 80°$

Probabilistic Equations

Computed Mean Overtopping q			
Prob q =	0.2326	ft^3/s/ft	Overtopping
	0.1386	ft^3/s/ft	Maximum Overtopping

0.0216 m^3/s/m

Probabilistic Equations

$$\frac{q}{\sqrt{gH_{m0}^3}} = \frac{0.067}{\sqrt{\tan\alpha}}\gamma_b\xi_{m-1,0}\exp\left(-4.75\frac{R_c}{\xi_{m-1,0}H_{m0}\gamma_b\gamma_f\gamma_\beta\gamma_v}\right)$$

$$\frac{q}{\sqrt{gH_{m0}^3}} < 0.2\cdot\exp\left(-2.6\frac{R_c}{H_{m0}\gamma_f\gamma_\beta}\right)$$

Uncertainty

μ = 4.75, σ = 0.5

μ = 2.6, σ = 0.35

2030_2% FLOOD (50 YR) OVERTOPPING

Wave Overtopping of Uniform Structure Slopes

The overtopping is computed based on the equations given in the EurOtop manual.

Legend
User inputs (Input Worksheet)
Intermediate Computations
Final Calculation

Input Wave and Water Level Variables from Input Sheet			
H_{m0} =	5.9000	ft	Wave Height
T_p =	9.0000	s	Wave Period
h =	15.9000	ft	Total Depth at Levee Toe
cot a =	1.0000		Seaward Slope
g_f =	1.0000		Roughness Influence Factor
g_b =	1.0000		Berm
g =	32.2000	ft/s^2	Acceleration of Gravity
b =	45.0000	deg	Wave Obliquity
	1.0000		CASE
H_{m0}/h_B =	0.7800		Breaker Ratio for Breaker Height at xB

Input Structure Geometry from Input Sheet			
Point	x	Elevation	coords
Leeward Structure Toe	21	0	x_1, e_1
Leeward End of Crest	21	25	x_2, e_2
Seaward End of Crest	18	25	x_3, e_3
Seaward Structure Toe	18	0	x_4, e_4

Computed Variables			
$T_{m-1,0}$ =	8.1818	s	Spectral Wave Period
L_p =	26.4710	ft	Spectral Wave Length
g_f =	1.0000		Roughness Influence Coefficient
g_b =	0.8515		Wave Obliquity Influence Coefficient

Computed Overtopping q			
tan a =	1.0000		Equivalent Slope
s_p =	0.0756		Spectral Wave Steepness
ξ_m =	3.6381		Iribarren Parameter
R_c =	9.1000	ft	Freeboard
Det q =	0.2523	ft^3/s/ft	Overtopping
max q =	0.2523	ft^3/s/ft	Maximum Overtopping

0.0234 m^3/s/m

Determinitstic Equations

$$\frac{q}{\sqrt{gH_{m0}^3}} = \frac{0.067}{\sqrt{\tan\alpha}}\gamma_b\xi_{m-1,0}\exp\left(-4.3\frac{R_c}{\xi_{m-1,0}H_{m0}\gamma_b\gamma_f\gamma_\beta\gamma_v}\right)$$

$$\frac{q}{\sqrt{gH_{m0}^3}} < 0.2\cdot\exp\left(-2.3\frac{R_c}{H_{m0}\gamma_f\gamma_\beta}\right)$$

Wave overtopping for short-crested waves

$\gamma_\beta = 1 - 0.0033\,|\beta|$ $\quad 0° \le |\beta| \le 80°$

$\gamma_\beta = 1 - 0.0033\,(80)$ $\quad |\beta| > 80°$

Probabilistic Equations

Computed Mean Overtopping q			
Prob q =	0.2523	ft^3/s/ft	Overtopping
	0.1465	ft^3/s/ft	Maximum Overtopping

0.0234 m^3/s/m

Probabilistic Equations

$$\frac{q}{\sqrt{gH_{m0}^3}} = \frac{0.067}{\sqrt{\tan\alpha}}\gamma_b\xi_{m-1,0}\exp\left(-4.75\frac{R_c}{\xi_{m-1,0}H_{m0}\gamma_b\gamma_f\gamma_\beta\gamma_v}\right)$$

$$\frac{q}{\sqrt{gH_{m0}^3}} < 0.2\cdot\exp\left(-2.6\frac{R_c}{H_{m0}\gamma_f\gamma_\beta}\right)$$

Uncertainty

μ = 4.75, σ = 0.5

μ = 2.6, σ = 0.35

2030_1% FLOOD (100 YR) OVERTOPPING

Wave Overtopping of Uniform Structure Slopes

The overtopping is computed based on the equations given in the EurOtop manual.

Legend
User inputs (Input Worksheet)
Intermediate Computations
Final Calculation

Input Wave and Water Level Variables from Input Sheet			
H_{m0} =	6.6000	ft	Wave Height
T_p =	14.0000	s	Wave Period
h =	17.2000	ft	Total Depth at Levee Toe
cot a =	1.0000		Seaward Slope
g_f =	1.0000		Roughness Influence Factor
g_b =	1.0000		Berm
g =	32.2000	ft/s^2	Acceleration of Gravity
b =	45.0000	deg	Wave Obliquity
	1.0000		CASE
H_{s}/h_{s} =	0.7800		Breaker Ratio for Breaker Height at xB

Input Structure Geometry from Input Sheet			
Point	x	Elevation	coords
Leeward Structure Toe	21	0	x_1, e_1
Leeward End of Crest	21	31.5	x_2, e_2
Seaward End of Crest	18	31.5	x_3, e_3
Seaward Structure Toe	18	0	x_4, e_4

Computed Variables			
$T_{m-1,0}$ =	12.7273	s	Spectral Wave Period
L_p =	26.4710	ft	Spectral Wave Length
g_f =	1.0000		Roughness Influence Coefficient
g_b =	0.8515		Wave Obliquity Influence Coefficient

Computed Overtopping q			
tan a =	1.0000		Equivalent Slope
s_p =	0.0756		Spectral Wave Steepness
x_b =	3.6381		Iribarren Parameter
R_c =	14.3000	ft	Freeboard
Det q =	0.0553	ft^3/s/ft	Overtopping
max q =	0.0553	ft^3/s/ft	Maximum Overtopping

0.0051 m^3/s/m

Determinitstic Equations

$$\frac{q}{\sqrt{gH_{m0}^3}} = \frac{0.067}{\sqrt{\tan\alpha}}\gamma_b\xi_{m-1,0}\exp\left(-4.3\frac{R_c}{\xi_{m-1,0}H_{m0}\gamma_b\gamma_f\gamma_\beta\gamma_v}\right)$$

$$\frac{q}{\sqrt{gH_{m0}^3}} < 0.2\cdot\exp\left(-2.3\frac{R_c}{H_{m0}\gamma_f\gamma_\beta}\right)$$

Wave overtopping for short-crested waves

$\gamma_\beta = 1 - 0.0033\,|\beta|$ $\quad 0° \le |\beta| \le 80°$

$\gamma_\beta = 1 - 0.0033\,(80)$ $\quad |\beta| > 80°$

Probabilistic Equations

Computed Mean Overtopping q			
Prob q =	0.0553	ft^3/s/ft	Overtopping
	0.0258	ft^3/s/ft	Maximum Overtopping

0.0051 m^3/s/m

Probabilistic Equations

$$\frac{q}{\sqrt{gH_{m0}^3}} = \frac{0.067}{\sqrt{\tan\alpha}}\gamma_b\xi_{m-1,0}\exp\left(-4.75\frac{R_c}{\xi_{m-1,0}H_{m0}\gamma_b\gamma_f\gamma_\beta\gamma_v}\right)$$

$$\frac{q}{\sqrt{gH_{m0}^3}} < 0.2\cdot\exp\left(-2.6\frac{R_c}{H_{m0}\gamma_f\gamma_\beta}\right)$$

Uncertainty

μ = 4.75, σ = 0.5

μ = 2.6, σ = 0.35

2079_10% FLOOD (10 YR) OVERTOPPING

Wave Overtopping of Uniform Structure Slopes

The overtopping is computed based on the equations given in the EurOtop manual.

Legend
User inputs (Input Worksheet)
Intermediate Computations
Final Calculation

Input Wave and Water Level Variables from Input Sheet			
H_{m0} =	4.3000	ft	Wave Height
T_p =	6.4000	s	Wave Period
h =	13.4000	ft	Total Depth at Levee Toe
cot a =	1.0000		Seaward Slope
g_f =	1.0000		Roughness Influence Factor
g_b =	1.0000		Berm
g =	32.2000	ft/s^2	Acceleration of Gravity
b =	45.0000	deg	Wave Obliquity
	1.0000		CASE
H_{pl}/h_p =	0.7800		Breaker Ratio for Breaker Height at xB

Input Structure Geometry from Input Sheet			
Point	x	Elevation	coords
Leeward Structure Toe	21	0	x_1, e_1
Leeward End of Crest	21	18.5	x_2, e_2
Seaward End of Crest	18	18.5	x_3, e_3
Seaward Structure Toe	18	0	x_4, e_4

Computed Variables			
$T_{m-1,0}$ =	5.8182	s	Spectral Wave Period
L_p =	26.4710	ft	Spectral Wave Length
g_f =	1.0000		Roughness Influence Coefficient
g_b =	0.8515		Wave Obliquity Influence Coefficient

Computed Overtopping q			
tan a =	1.0000		Equivalent Slope
s_p =	0.0756		Spectral Wave Steepness
ξ_m =	3.6381		Iribarren Parameter
R_c =	5.1000	ft	Freeboard
Det q =	0.4110	ft^3/s/ft	Overtopping
max q =	0.4110	ft^3/s/ft	Maximum Overtopping

0.0382 m^3/s/m

Determinitstic Equations

$$\frac{q}{\sqrt{gH_{m0}^3}} = \frac{0.067}{\sqrt{\tan\alpha}}\gamma_b\xi_{m-1,0}\exp\left(-4.3\frac{R_c}{\xi_{m-1,0}H_{m0}\gamma_b\gamma_f\gamma_\beta\gamma_v}\right)$$

$$\frac{q}{\sqrt{gH_{m0}^3}} < 0.2\cdot\exp\left(-2.3\frac{R_c}{H_{m0}\gamma_f\gamma_\beta}\right)$$

Wave overtopping for short-crested waves

$\gamma_\beta = 1 - 0.0033\,|\beta|$ $\quad 0° \le |\beta| \le 80°$

$\gamma_\beta = 1 - 0.0033\,(80)$ $\quad |\beta| > 80°$

Probabilistic Equations

Computed Mean Overtopping q			
Prob q =	0.4110	ft^3/s/ft	Overtopping
	0.2706	ft^3/s/ft	Maximum Overtopping

0.0382 m^3/s/m

Probabilistic Equations

$$\frac{q}{\sqrt{gH_{m0}^3}} = \frac{0.067}{\sqrt{\tan\alpha}}\gamma_b\xi_{m-1,0}\exp\left(-4.75\frac{R_c}{\xi_{m-1,0}H_{m0}\gamma_b\gamma_f\gamma_\beta\gamma_v}\right)$$

$$\frac{q}{\sqrt{gH_{m0}^3}} < 0.2\cdot\exp\left(-2.6\frac{R_c}{H_{m0}\gamma_f\gamma_\beta}\right)$$

Uncertainty

μ = 4.75, σ = 0.5

μ = 2.6, σ = 0.35

2079_5% FLOOD (20 YR) OVERTOPPING

Wave Overtopping of Uniform Structure Slopes

The overtopping is computed based on the equations given in the EurOtop manual.

Legend
User inputs (Input Worksheet)
Intermediate Computations
Final Calculation

Input Wave and Water Level Variables from Input Sheet			
H_{m0} =	4.9000	ft	Wave Height
T_p =	7.6000	s	Wave Period
h =	14.8000	ft	Total Depth at Levee Toe
cot a =	1.0000		Seaward Slope
g_f =	1.0000		Roughness Influence Factor
g_b =	1.0000		Berm
g =	32.2000	ft/s^2	Acceleration of Gravity
b =	45.0000	deg	Wave Obliquity
	1.0000		CASE
H_{pl}/h_p =	0.7800		Breaker Ratio for Breaker Height at xB

Input Structure Geometry from Input Sheet			
Point	x	Elevation	coords
Leeward Structure Toe	21	0	x_1, e_1
Leeward End of Crest	21	21	x_2, e_2
Seaward End of Crest	18	21	x_3, e_3
Seaward Structure Toe	18	0	x_4, e_4

Computed Variables			
$T_{m-1,0}$ =	6.9091	s	Spectral Wave Period
L_p =	26.4710	ft	Spectral Wave Length
g_f =	1.0000		Roughness Influence Coefficient
g_b =	0.8515		Wave Obliquity Influence Coefficient

Computed Overtopping q			
tan a =	1.0000		Equivalent Slope
s_p =	0.0756		Spectral Wave Steepness
ξ_m =	3.6381		Iribarren Parameter
R_c =	6.2000	ft	Freeboard
Det q =	0.4036	ft^3/s/ft	Overtopping
max q =	0.4036	ft^3/s/ft	Maximum Overtopping

0.0375 m^3/s/m

Determinitstic Equations

$$\frac{q}{\sqrt{gH_{m0}^3}} = \frac{0.067}{\sqrt{\tan\alpha}}\gamma_b\xi_{m-1,0}\exp\left(-4.3\frac{R_c}{\xi_{m-1,0}H_{m0}\gamma_b\gamma_f\gamma_\beta\gamma_v}\right)$$

$$\frac{q}{\sqrt{gH_{m0}^3}} < 0.2\cdot\exp\left(-2.3\frac{R_c}{H_{m0}\gamma_f\gamma_\beta}\right)$$

Wave overtopping for short-crested waves

$\gamma_\beta = 1 - 0.0033\,|\beta|$ $\quad 0° \le |\beta| \le 80°$

$\gamma_\beta = 1 - 0.0033\,(80)$ $\quad |\beta| > 80°$

Probabilistic Equations

Computed Mean Overtopping q			
Prob q =	0.4036	ft^3/s/ft	Overtopping
	0.2584	ft^3/s/ft	Maximum Overtopping

0.0375 m^3/s/m

Probabilistic Equations

$$\frac{q}{\sqrt{gH_{m0}^3}} = \frac{0.067}{\sqrt{\tan\alpha}}\gamma_b\xi_{m-1,0}\exp\left(-4.75\frac{R_c}{\xi_{m-1,0}H_{m0}\gamma_b\gamma_f\gamma_\beta\gamma_v}\right)$$

$$\frac{q}{\sqrt{gH_{m0}^3}} < 0.2\cdot\exp\left(-2.6\frac{R_c}{H_{m0}\gamma_f\gamma_\beta}\right)$$

Uncertainty

μ = 4.75, σ = 0.5

μ = 2.6, σ = 0.35

2079_2% FLOOD (50 YR) OVERTOPPING

Wave Overtopping of Uniform Structure Slopes

The overtopping is computed based on the equations given in the EurOtop manual.

Legend
User inputs (Input Worksheet)
Intermediate Computations
Final Calculation

Input Wave and Water Level Variables from Input Sheet			
H_{m0} =	5.9000	ft	Wave Height
T_p =	9.0000	s	Wave Period
h =	16.9000	ft	Total Depth at Levee Toe
cot a =	1.0000		Seaward Slope
g_f =	1.0000		Roughness Influence Factor
g_b =	1.0000		Berm
g =	32.2000	ft/s^2	Acceleration of Gravity
b =	45.0000	deg	Wave Obliquity
	1.0000		CASE
H_{s}/h_{s} =	0.7800		Breaker Ratio for Breaker Height at xB

Input Structure Geometry from Input Sheet			
Point	x	Elevation	coords
Leeward Structure Toe	21	0	x_1, e_1
Leeward End of Crest	21	25	x_2, e_2
Seaward End of Crest	18	25	x_3, e_3
Seaward Structure Toe	18	0	x_4, e_4

Computed Variables			
$T_{m-1,0}$ =	8.1818	s	Spectral Wave Period
L_p =	26.4710	ft	Spectral Wave Length
g_f =	1.0000		Roughness Influence Coefficient
g_b =	0.8515		Wave Obliquity Influence Coefficient

Computed Overtopping q			
tan a =	1.0000		Equivalent Slope
s_p =	0.0756		Spectral Wave Steepness
x_b =	3.6381		Iribarren Parameter
R_c =	8.1000	ft	Freeboard
Det q =	0.3988	ft^3/s/ft	Overtopping
max q =	0.3988	ft^3/s/ft	Maximum Overtopping

0.0370 m^3/s/m

Determinitstic Equations

$$\frac{q}{\sqrt{gH_{m0}^3}} = \frac{0.067}{\sqrt{\tan\alpha}}\gamma_b\xi_{m-1,0}\exp\left(-4.3\frac{R_c}{\xi_{m-1,0}H_{m0}\gamma_b\gamma_f\gamma_\beta\gamma_v}\right)$$

$$\frac{q}{\sqrt{gH_{m0}^3}} < 0.2\cdot\exp\left(-2.3\frac{R_c}{H_{m0}\gamma_f\gamma_\beta}\right)$$

Wave overtopping for short-crested waves

$\gamma_\beta = 1 - 0.0033\,|\beta|$ $\quad 0° \le |\beta| \le 80°$

$\gamma_\beta = 1 - 0.0033\,(80)$ $\quad |\beta| > 80°$

Probabilistic Equations

Computed Mean Overtopping q			
Prob q =	0.3988	ft^3/s/ft	Overtopping
	0.2459	ft^3/s/ft	Maximum Overtopping

0.0370 m^3/s/m

Probabilistic Equations

$$\frac{q}{\sqrt{gH_{m0}^3}} = \frac{0.067}{\sqrt{\tan\alpha}}\gamma_b\xi_{m-1,0}\exp\left(-4.75\frac{R_c}{\xi_{m-1,0}H_{m0}\gamma_b\gamma_f\gamma_\beta\gamma_v}\right)$$

$$\frac{q}{\sqrt{gH_{m0}^3}} < 0.2\cdot\exp\left(-2.6\frac{R_c}{H_{m0}\gamma_f\gamma_\beta}\right)$$

Uncertainty

μ = 4.75, σ = 0.5

μ = 2.6, σ = 0.35

2079_1% FLOOD (100 YR) OVERTOPPING

Wave Overtopping of Uniform Structure Slopes

The overtopping is computed based on the equations given in the EurOtop manual.

Legend
User inputs (Input Worksheet)
Intermediate Computations
Final Calculation

Input Wave and Water Level Variables from Input Sheet			
H_{m0} =	6.6000	ft	Wave Height
T_p =	14.0000	s	Wave Period
h =	18.3000	ft	Total Depth at Levee Toe
cot a =	1.0000		Seaward Slope
g_f =	1.0000		Roughness Influence Factor
g_b =	1.0000		Berm
g =	32.2000	ft/s^2	Acceleration of Gravity
b =	45.0000	deg	Wave Obliquity
	1.0000		CASE
H_{s}/h_{s} =	0.7800		Breaker Ratio for Breaker Height at xB

Input Structure Geometry from Input Sheet			
Point	x	Elevation	coords
Leeward Structure Toe	21	0	x_1, e_1
Leeward End of Crest	21	31.5	x_2, e_2
Seaward End of Crest	18	31.5	x_3, e_3
Seaward Structure Toe	18	0	x_4, e_4

Computed Variables			
$T_{m-1,0}$ =	12.7273	s	Spectral Wave Period
L_p =	26.4710	ft	Spectral Wave Length
g_f =	1.0000		Roughness Influence Coefficient
g_b =	0.8515		Wave Obliquity Influence Coefficient

Computed Overtopping q			
tan a =	1.0000		Equivalent Slope
s_p =	0.0756		Spectral Wave Steepness
ξ_m =	3.6381		Iribarren Parameter
R_c =	13.2000	ft	Freeboard
Det q =	0.0867	ft^3/s/ft	Overtopping
max q =	0.0867	ft^3/s/ft	Maximum Overtopping

0.0081 m^3/s/m

Determinitstic Equations

$$\frac{q}{\sqrt{gH_{m0}^3}} = \frac{0.067}{\sqrt{\tan\alpha}}\gamma_b\xi_{m-1,0}\exp\left(-4.3\frac{R_c}{\xi_{m-1,0}H_{m0}\gamma_b\gamma_f\gamma_\beta\gamma_v}\right)$$

$$\frac{q}{\sqrt{gH_{m0}^3}} < 0.2\cdot\exp\left(-2.3\frac{R_c}{H_{m0}\gamma_f\gamma_\beta}\right)$$

Wave overtopping for short-crested waves

$\gamma_\beta = 1 - 0.0033\,|\beta|$ $\quad 0° \le |\beta| \le 80°$

$\gamma_\beta = 1 - 0.0033\,(80)$ $\quad |\beta| > 80°$

Probabilistic Equations

Computed Mean Overtopping q			
Prob q =	0.0867	ft^3/s/ft	Overtopping
	0.0429	ft^3/s/ft	Maximum Overtopping

0.0081 m^3/s/m

Probabilistic Equations

$$\frac{q}{\sqrt{gH_{m0}^3}} = \frac{0.067}{\sqrt{\tan\alpha}}\gamma_b\xi_{m-1,0}\exp\left(-4.75\frac{R_c}{\xi_{m-1,0}H_{m0}\gamma_b\gamma_f\gamma_\beta\gamma_v}\right)$$

$$\frac{q}{\sqrt{gH_{m0}^3}} < 0.2\cdot\exp\left(-2.6\frac{R_c}{H_{m0}\gamma_f\gamma_\beta}\right)$$

Uncertainty

μ = 4.75, σ = 0.5

μ = 2.6, σ = 0.35

TAMIAMI GATE/WALLS: VERTICAL WALL

2030_5% FLOOD (20 YR) OVERTOPPING

Wave Overtopping of Uniform Structure Slopes

The overtopping is computed based on the equations given in the EurOtop manual.

Legend
User inputs (Input Worksheet)
Intermediate Computations
Final Calculation

Input Wave and Water Level Variables from Input Sheet			
H_{m0} =	1.8000	ft	Wave Height
T_p =	2.3000	s	Wave Period
h =	11.8000	ft	Total Depth at Levee Toe
cot a =	1.0000		Seaward Slope
g_f =	1.0000		Roughness Influence Factor
g_b =	1.0000		Berm
g =	32.2000	ft/s^2	Acceleration of Gravity
b =	45.0000	deg	Wave Obliquity
	1.0000		CASE
H_B/h_B =	0.7800		Breaker Ratio for Breaker Height at xB

Input Structure Geometry from Input Sheet			
Point	x	Elevation	coords
Leeward Structure Toe	21	0	x_1, e_1
Leeward End of Crest	21	14	x_2, e_2
Seaward End of Crest	18	14	x_3, e_3
Seaward Structure Toe	18	0	x_4, e_4

Computed Variables			
$T_{m-1,0}$ =	2.0909	s	Spectral Wave Period
L_p =	26.4710	ft	Spectral Wave Length
g_f =	1.0000		Roughness Influence Coefficient
g_b =	0.8515		Wave Obliquity Influence Coefficient

Computed Overtopping q			
tan a =	1.0000		Equivalent Slope
s_p =	0.0756		Spectral Wave Steepness
ξ_m =	3.6381		Iribarren Parameter
R_c =	2.2000	ft	Freeboard
Det q =	0.1009	ft^3/s/ft	Overtopping
max q =	0.1009	ft^3/s/ft	Maximum Overtopping

0.0094 m^3/s/m

Determinitstic Equations

$$\frac{q}{\sqrt{gH_{m0}^3}} = \frac{0.067}{\sqrt{\tan\alpha}}\gamma_b \xi_{m-1,0} \exp\left(-4.3\frac{R_c}{\xi_{m-1,0}H_{m0}\gamma_b\gamma_f\gamma_\beta\gamma_v}\right)$$

$$\frac{q}{\sqrt{gH_{m0}^3}} < 0.2\cdot\exp\left(-2.3\frac{R_c}{H_{m0}\gamma_f\gamma_\beta}\right)$$

Wave overtopping for short-crested waves

$\gamma_\beta = 1 - 0.0033\,|\beta|$ $\quad 0° \le |\beta| \le 80°$

$\gamma_\beta = 1 - 0.0033\,(80)$ $\quad |\beta| > 80°$

Probabilistic Equations

Computed Mean Overtopping q			
Prob q =	0.1009	ft^3/s/ft	Overtopping
	0.0656	ft^3/s/ft	Maximum Overtopping

0.0094 m^3/s/m

Probabilistic Equations

$$\frac{q}{\sqrt{gH_{m0}^3}} = \frac{0.067}{\sqrt{\tan\alpha}}\gamma_b \xi_{m-1,0} \exp\left(-4.75\frac{R_c}{\xi_{m-1,0}H_{m0}\gamma_b\gamma_f\gamma_\beta\gamma_v}\right)$$

$$\frac{q}{\sqrt{gH_{m0}^3}} < 0.2\cdot\exp\left(-2.6\frac{R_c}{H_{m0}\gamma_f\gamma_\beta}\right)$$

Uncertainty

μ = 4.75, σ = 0.5

μ = 2.6, σ = 0.35

2030_2% FLOOD (50 YR) OVERTOPPING

Wave Overtopping of Uniform Structure Slopes

The overtopping is computed based on the equations given in the EurOtop manual.

Legend
User inputs (Input Worksheet)
Intermediate Computations
Final Calculation

Input Wave and Water Level Variables from Input Sheet			
H_{m0} =	2.4000	ft	Wave Height
T_p =	2.6000	s	Wave Period
h =	13.4000	ft	Total Depth at Levee Toe
cot a =	1.0000		Seaward Slope
g_f =	1.0000		Roughness Influence Factor
g_b =	1.0000		Berm
g =	32.2000	ft/s^2	Acceleration of Gravity
b =	45.0000	deg	Wave Obliquity
	1.0000		CASE
H_{p}/h_{p} =	0.7800		Breaker Ratio for Breaker Height at xB

Input Structure Geometry from Input Sheet			
Point	x	Elevation	coords
Leeward Structure Toe	21	0	x_1, e_1
Leeward End of Crest	21	16.5	x_2, e_2
Seaward End of Crest	18	16.5	x_3, e_3
Seaward Structure Toe	18	0	x_4, e_4

Computed Variables			
$T_{m-1,0}$ =	2.3636	s	Spectral Wave Period
L_p =	26.4710	ft	Spectral Wave Length
g_f =	1.0000		Roughness Influence Coefficient
g_b =	0.8515		Wave Obliquity Influence Coefficient

Computed Overtopping q			
tan a =	1.0000		Equivalent Slope
s_p =	0.0756		Spectral Wave Steepness
x_n =	3.6381		Iribarren Parameter
R_c =	3.1000	ft	Freeboard
Det q =	0.1288	ft^3/s/ft	Overtopping
max q =	0.1288	ft^3/s/ft	Maximum Overtopping

0.0120 m^3/s/m

Determinitstic Equations

$$\frac{q}{\sqrt{gH_{m0}^3}} = \frac{0.067}{\sqrt{\tan\alpha}}\gamma_b\xi_{m-1,0}\exp\left(-4.3\frac{R_c}{\xi_{m-1,0}H_{m0}\gamma_b\gamma_f\gamma_\beta\gamma_v}\right)$$

$$\frac{q}{\sqrt{gH_{m0}^3}} < 0.2\cdot\exp\left(-2.3\frac{R_c}{H_{m0}\gamma_f\gamma_\beta}\right)$$

Wave overtopping for short-crested waves

$\gamma_\beta = 1 - 0.0033\,|\beta|$ $\quad 0° \le |\beta| \le 80°$

$\gamma_\beta = 1 - 0.0033\,(80)$ $\quad |\beta| > 80°$

Probabilistic Equations

Computed Mean Overtopping q			
Prob q =	0.1288	ft^3/s/ft	Overtopping
	0.0817	ft^3/s/ft	Maximum Overtopping

0.0120 m^3/s/m

Probabilistic Equations

$$\frac{q}{\sqrt{gH_{m0}^3}} = \frac{0.067}{\sqrt{\tan\alpha}}\gamma_b\xi_{m-1,0}\exp\left(-4.75\frac{R_c}{\xi_{m-1,0}H_{m0}\gamma_b\gamma_f\gamma_\beta\gamma_v}\right)$$

$$\frac{q}{\sqrt{gH_{m0}^3}} < 0.2\cdot\exp\left(-2.6\frac{R_c}{H_{m0}\gamma_f\gamma_\beta}\right)$$

Uncertainty

μ = 4.75, σ = 0.5

μ = 2.6, σ = 0.35

2030_1% FLOOD (100 YR) OVERTOPPING

Wave Overtopping of Uniform Structure Slopes

The overtopping is computed based on the equations given in the EurOtop manual.

Legend
User inputs (Input Worksheet)
Intermediate Computations
Final Calculation

Input Wave and Water Level Variables from Input Sheet			
H_{m0} =	2.8000	ft	Wave Height
T_p =	2.7000	s	Wave Period
h =	14.6000	ft	Total Depth at Levee Toe
cot a =	1.0000		Seaward Slope
g_f =	1.0000		Roughness Influence Factor
g_b =	1.0000		Berm
g =	32.2000	ft/s^2	Acceleration of Gravity
b =	45.0000	deg	Wave Obliquity
	1.0000		CASE
H_{pl}/h_p =	0.7800		Breaker Ratio for Breaker Height at xB

Input Structure Geometry from Input Sheet			
Point	x	Elevation	coords
Leeward Structure Toe	21	0	x_1, e_1
Leeward End of Crest	21	18	x_2, e_2
Seaward End of Crest	18	18	x_3, e_3
Seaward Structure Toe	18	0	x_4, e_4

Computed Variables			
$T_{m-1,0}$ =	2.4545	s	Spectral Wave Period
L_p =	26.4710	ft	Spectral Wave Length
g_f =	1.0000		Roughness Influence Coefficient
g_b =	0.8515		Wave Obliquity Influence Coefficient

Computed Overtopping q			
tan a =	1.0000		Equivalent Slope
s_p =	0.0756		Spectral Wave Steepness
ξ_m =	3.6381		Iribarren Parameter
R_c =	3.4000	ft	Freeboard
Det q =	0.2001	ft^3/s/ft	Overtopping
max q =	0.2001	ft^3/s/ft	Maximum Overtopping

0.0186 m^3/s/m

Determinitstic Equations

$$\frac{q}{\sqrt{gH_{m0}^3}} = \frac{0.067}{\sqrt{\tan\alpha}}\gamma_b\xi_{m-1,0}\exp\left(-4.3\frac{R_c}{\xi_{m-1,0}H_{m0}\gamma_b\gamma_f\gamma_\beta\gamma_v}\right)$$

$$\frac{q}{\sqrt{gH_{m0}^3}} < 0.2\cdot\exp\left(-2.3\frac{R_c}{H_{m0}\gamma_f\gamma_\beta}\right)$$

Wave overtopping for short-crested waves

$\gamma_\beta = 1 - 0.0033\,|\beta|$ $\quad 0° \le |\beta| \le 80°$

$\gamma_\beta = 1 - 0.0033\,(80)$ $\quad |\beta| > 80°$

Probabilistic Equations

Computed Mean Overtopping q			
Prob q =	0.2001	ft^3/s/ft	Overtopping
	0.1304	ft^3/s/ft	Maximum Overtopping

0.0186 m^3/s/m

Probabilistic Equations

$$\frac{q}{\sqrt{gH_{m0}^3}} = \frac{0.067}{\sqrt{\tan\alpha}}\gamma_b\xi_{m-1,0}\exp\left(-4.75\frac{R_c}{\xi_{m-1,0}H_{m0}\gamma_b\gamma_f\gamma_\beta\gamma_v}\right)$$

$$\frac{q}{\sqrt{gH_{m0}^3}} < 0.2\cdot\exp\left(-2.6\frac{R_c}{H_{m0}\gamma_f\gamma_\beta}\right)$$

Uncertainty

μ = 4.75, σ = 0.5

μ = 2.6, σ = 0.35

2079_5% FLOOD (20 YR) OVERTOPPING

Wave Overtopping of Uniform Structure Slopes

The overtopping is computed based on the equations given in the EurOtop manual.

Legend
User inputs (Input Worksheet)
Intermediate Computations
Final Calculation

Input Wave and Water Level Variables from Input Sheet			
H_{m0} =	1.8000	ft	Wave Height
T_p =	2.3000	s	Wave Period
h =	12.8000	ft	Total Depth at Levee Toe
cot a =	1.0000		Seaward Slope
g_f =	1.0000		Roughness Influence Factor
g_b =	1.0000		Berm
g =	32.2000	ft/s^2	Acceleration of Gravity
b =	45.0000	deg	Wave Obliquity
	1.0000		CASE
H_{p}/h_{p} =	0.7800		Breaker Ratio for Breaker Height at xB

Input Structure Geometry from Input Sheet			
Point	x	Elevation	coords
Leeward Structure Toe	21	0	x_1, e_1
Leeward End of Crest	21	14	x_2, e_2
Seaward End of Crest	18	14	x_3, e_3
Seaward Structure Toe	18	0	x_4, e_4

Computed Variables			
$T_{m-1,0}$ =	2.0909	s	Spectral Wave Period
L_p =	26.4710	ft	Spectral Wave Length
g_f =	1.0000		Roughness Influence Coefficient
g_b =	0.8515		Wave Obliquity Influence Coefficient

Computed Overtopping q			
tan a =	1.0000		Equivalent Slope
s_p =	0.0756		Spectral Wave Steepness
x_b =	3.6381		Iribarren Parameter
R_c =	1.2000	ft	Freeboard
Det q =	0.4527	ft^3/s/ft	Overtopping
max q =	0.4527	ft^3/s/ft	Maximum Overtopping

0.0421 m^3/s/m

Determinitstic Equations

$$\frac{q}{\sqrt{gH_{m0}^3}} = \frac{0.067}{\sqrt{\tan\alpha}}\gamma_b\xi_{m-1,0}\exp\left(-4.3\frac{R_c}{\xi_{m-1,0}H_{m0}\gamma_b\gamma_f\gamma_\beta\gamma_v}\right)$$

$$\frac{q}{\sqrt{gH_{m0}^3}} < 0.2\cdot\exp\left(-2.3\frac{R_c}{H_{m0}\gamma_f\gamma_\beta}\right)$$

Wave overtopping for short-crested waves

$\gamma_\beta = 1 - 0.0033\,|\beta|$ $\quad 0° \le |\beta| \le 80°$

$\gamma_\beta = 1 - 0.0033\,(80)$ $\quad |\beta| > 80°$

Probabilistic Equations

Computed Mean Overtopping q			
Prob q =	0.4527	ft^3/s/ft	Overtopping
	0.3579	ft^3/s/ft	Maximum Overtopping

0.0421 m^3/s/m

Probabilistic Equations

$$\frac{q}{\sqrt{gH_{m0}^3}} = \frac{0.067}{\sqrt{\tan\alpha}}\gamma_b\xi_{m-1,0}\exp\left(-4.75\frac{R_c}{\xi_{m-1,0}H_{m0}\gamma_b\gamma_f\gamma_\beta\gamma_v}\right)$$

$$\frac{q}{\sqrt{gH_{m0}^3}} < 0.2\cdot\exp\left(-2.6\frac{R_c}{H_{m0}\gamma_f\gamma_\beta}\right)$$

Uncertainty

μ = 4.75, σ = 0.5

μ = 2.6, σ = 0.35

2079_2% FLOOD (50 YR) OVERTOPPING

Wave Overtopping of Uniform Structure Slopes

The overtopping is computed based on the equations given in the EurOtop manual.

Legend
User inputs (Input Worksheet)
Intermediate Computations
Final Calculation

Input Wave and Water Level Variables from Input Sheet			
H_{m0} =	2.4000	ft	Wave Height
T_p =	2.6000	s	Wave Period
h =	14.4000	ft	Total Depth at Levee Toe
cot a =	1.0000		Seaward Slope
g_f =	1.0000		Roughness Influence Factor
g_b =	1.0000		Berm
g =	32.2000	ft/s^2	Acceleration of Gravity
b =	45.0000	deg	Wave Obliquity
	1.0000		CASE
H_{p}/h_{p} =	0.7800		Breaker Ratio for Breaker Height at xB

Input Structure Geometry from Input Sheet			
Point	x	Elevation	coords
Leeward Structure Toe	21	0	x_1, e_1
Leeward End of Crest	21	16.5	x_2, e_2
Seaward End of Crest	18	16.5	x_3, e_3
Seaward Structure Toe	18	0	x_4, e_4

Computed Variables			
$T_{m-1,0}$ =	2.3636	s	Spectral Wave Period
L_p =	26.4710	ft	Spectral Wave Length
g_f =	1.0000		Roughness Influence Coefficient
g_b =	0.8515		Wave Obliquity Influence Coefficient

Computed Overtopping q			
tan a =	1.0000		Equivalent Slope
s_p =	0.0756		Spectral Wave Steepness
ξ_m =	3.6381		Iribarren Parameter
R_c =	2.1000	ft	Freeboard
Det q =	0.3970	ft^3/s/ft	Overtopping
max q =	0.3970	ft^3/s/ft	Maximum Overtopping

0.0369 m^3/s/m

Determinitstic Equations

$$\frac{q}{\sqrt{gH_{m0}^3}} = \frac{0.067}{\sqrt{\tan\alpha}}\gamma_b\xi_{m-1,0}\exp\left(-4.3\frac{R_c}{\xi_{m-1,0}H_{m0}\gamma_b\gamma_f\gamma_\beta\gamma_v}\right)$$

$$\frac{q}{\sqrt{gH_{m0}^3}} < 0.2\cdot\exp\left(-2.3\frac{R_c}{H_{m0}\gamma_f\gamma_\beta}\right)$$

Wave overtopping for short-crested waves

$\gamma_\beta = 1 - 0.0033\,|\beta|$ $\quad 0° \le |\beta| \le 80°$

$\gamma_\beta = 1 - 0.0033\,(80)$ $\quad |\beta| > 80°$

Probabilistic Equations

Computed Mean Overtopping q			
Prob q =	0.3970	ft^3/s/ft	Overtopping
	0.2917	ft^3/s/ft	Maximum Overtopping

0.0369 m^3/s/m

Probabilistic Equations

$$\frac{q}{\sqrt{gH_{m0}^3}} = \frac{0.067}{\sqrt{\tan\alpha}}\gamma_b\xi_{m-1,0}\exp\left(-4.75\frac{R_c}{\xi_{m-1,0}H_{m0}\gamma_b\gamma_f\gamma_\beta\gamma_v}\right)$$

$$\frac{q}{\sqrt{gH_{m0}^3}} < 0.2\cdot\exp\left(-2.6\frac{R_c}{H_{m0}\gamma_f\gamma_\beta}\right)$$

Uncertainty

μ = 4.75, σ = 0.5

μ = 2.6, σ = 0.35

2079_1% FLOOD (100 YR) OVERTOPPING

Wave Overtopping of Uniform Structure Slopes

The overtopping is computed based on the equations given in the EurOtop manual.

Legend
User inputs (Input Worksheet)
Intermediate Computations
Final Calculation

Input Wave and Water Level Variables from Input Sheet			
H_{m0} =	2.8000	ft	Wave Height
T_p =	2.7000	s	Wave Period
h =	15.6000	ft	Total Depth at Levee Toe
cot a =	1.0000		Seaward Slope
g_f =	1.0000		Roughness Influence Factor
g_b =	1.0000		Berm
g =	32.2000	ft/s^2	Acceleration of Gravity
b =	45.0000	deg	Wave Obliquity
	1.0000		CASE
H_{p}/h_{p} =	0.7800		Breaker Ratio for Breaker Height at xB

Input Structure Geometry from Input Sheet			
Point	x	Elevation	coords
Leeward Structure Toe	21	0	x_1, e_1
Leeward End of Crest	21	18	x_2, e_2
Seaward End of Crest	18	18	x_3, e_3
Seaward Structure Toe	18	0	x_4, e_4

Computed Variables			
$T_{m-1,0}$ =	2.4545	s	Spectral Wave Period
L_p =	26.4710	ft	Spectral Wave Length
g_f =	1.0000		Roughness Influence Coefficient
g_b =	0.8515		Wave Obliquity Influence Coefficient

Computed Overtopping q			
tan a =	1.0000		Equivalent Slope
s_p =	0.0756		Spectral Wave Steepness
x_b =	3.6381		Iribarren Parameter
R_c =	2.4000	ft	Freeboard
Det q =	0.5250	ft^3/s/ft	Overtopping
max q =	0.5250	ft^3/s/ft	Maximum Overtopping

0.0488 m^3/s/m

Determinitstic Equations

$$\frac{q}{\sqrt{gH_{m0}^3}} = \frac{0.067}{\sqrt{\tan\alpha}}\gamma_b\xi_{m-1,0}\exp\left(-4.3\frac{R_c}{\xi_{m-1,0}H_{m0}\gamma_b\gamma_f\gamma_\beta\gamma_v}\right)$$

$$\frac{q}{\sqrt{gH_{m0}^3}} < 0.2\cdot\exp\left(-2.3\frac{R_c}{H_{m0}\gamma_f\gamma_\beta}\right)$$

Wave overtopping for short-crested waves

$\gamma_\beta = 1 - 0.0033\,|\beta|$ $\quad 0° \le |\beta| \le 80°$

$\gamma_\beta = 1 - 0.0033\,(80)$ $\quad |\beta| > 80°$

Probabilistic Equations

Computed Mean Overtopping q			
Prob q =	0.5250	ft^3/s/ft	Overtopping
	0.3882	ft^3/s/ft	Maximum Overtopping

0.0488 m^3/s/m

Probabilistic Equations

$$\frac{q}{\sqrt{gH_{m0}^3}} = \frac{0.067}{\sqrt{\tan\alpha}}\gamma_b\xi_{m-1,0}\exp\left(-4.75\frac{R_c}{\xi_{m-1,0}H_{m0}\gamma_b\gamma_f\gamma_\beta\gamma_v}\right)$$

$$\frac{q}{\sqrt{gH_{m0}^3}} < 0.2\cdot\exp\left(-2.6\frac{R_c}{H_{m0}\gamma_f\gamma_\beta}\right)$$

Uncertainty

μ = 4.75, σ = 0.5

μ = 2.6, σ = 0.35

MARCO ISLAND REVETMENT

2030_10% FLOOD (10 YR) OVERTOPPING

Wave Overtopping of Uniform Structure Slopes

The overtopping is computed based on the equations given in the EurOtop manual.

Legend
User inputs (Input Worksheet)
Intermediate Computations
Final Calculation

Input Wave and Water Level Variables from Input Sheet			
H_{m0} =	3.7000	ft	Wave Height
T_p =	10.6000	s	Wave Period
h =	10.6000	ft	Total Depth at Levee Toe
cot a =	2.0000		Seaward Slope
g_f =	0.7000		Roughness Influence Factor
g_b =	1.0000		Berm
g =	32.2000	ft/s^2	Acceleration of Gravity
b =	45.0000	deg	Wave Obliquity
	1.0000		CASE
H_B / h_B =	0.7800		Breaker Ratio for Breaker Height at xB

Input Structure Geometry from Input Sheet			
Point	x	Elevation	coords
Leeward Structure Toe	-37	0	x_1, e_1
Leeward End of Crest	0	15	x_2, e_2
Seaward End of Crest	10	15	x_3, e_3
Seaward Structure Toe	13	13.5	x_4, e_4

Computed Variables			
$T_{m-1,0}$ =	9.6364	s	Spectral Wave Period
L_p =	475.8854	ft	Spectral Wave Length
g_f =	0.7000		Roughness Influence Coefficient
g_b =	0.8515		Wave Obliquity Influence Coefficient

Determinitstic Equations

$$\frac{q}{\sqrt{gH_{m0}^3}} = \frac{0.067}{\sqrt{\tan\alpha}}\gamma_b \xi_{m-1,0} \exp\left(-4.3\frac{R_c}{\xi_{m-1,0}H_{m0}\gamma_b\gamma_f\gamma_\beta\gamma_v}\right)$$

$$\frac{q}{\sqrt{gH_{m0}^3}} < 0.2 \cdot \exp\left(-2.3\frac{R_c}{H_{m0}\gamma_f\gamma_\beta}\right)$$

Wave overtopping for short-crested waves

$\gamma_\beta = 1 - 0.0033\,|\beta|$ $\quad 0° \le |\beta| \le 80°$

$\gamma_\beta = 1 - 0.0033\,(80)$ $\quad |\beta| > 80°$

Computed Overtopping q			
tan a =	0.5000		Equivalent Slope
s_p =	0.0078		Spectral Wave Steepness
ξ_m =	11.3410		Iribarren Parameter
R_c =	4.4000	ft	Freeboard
Det q =	0.0821	ft^3/s/ft	Overtopping
max q =	0.0821	ft^3/s/ft	Maximum Overtopping

0.0076 m^3/s/m

Probabilistic Equations

Computed Mean Overtopping q			
Prob q =	0.0821	ft^3/s/ft	Overtopping
	0.0451	ft^3/s/ft	Maximum Overtopping

0.0076 m^3/s/m

Probabilistic Equations

$$\frac{q}{\sqrt{gH_{m0}^3}} = \frac{0.067}{\sqrt{\tan\alpha}}\gamma_b \xi_{m-1,0} \exp\left(-4.75\frac{R_c}{\xi_{m-1,0}H_{m0}\gamma_b\gamma_f\gamma_\beta\gamma_v}\right)$$

$$\frac{q}{\sqrt{gH_{m0}^3}} < 0.2 \cdot \exp\left(-2.6\frac{R_c}{H_{m0}\gamma_f\gamma_\beta}\right)$$

Uncertainty

μ = 4.75, σ = 0.5

μ = 2.6, σ = 0.35

2030_5% FLOOD (20 YR) OVERTOPPING

Wave Overtopping of Uniform Structure Slopes

The overtopping is computed based on the equations given in the EurOtop manual.

Legend
User inputs (Input Worksheet)
Intermediate Computations
Final Calculation

Input Wave and Water Level Variables from Input Sheet			
H_{m0} =	4.5000	ft	Wave Height
T_p =	11.9000	s	Wave Period
h =	11.9000	ft	Total Depth at Levee Toe
cot a =	2.0000		Seaward Slope
g_f =	0.7000		Roughness Influence Factor
g_b =	1.0000		Berm
g =	32.2000	ft/s^2	Acceleration of Gravity
b =	45.0000	deg	Wave Obliquity
	1.0000		CASE
H_B/h_B =	0.7800		Breaker Ratio for Breaker Height at xB

Input Structure Geometry from Input Sheet			
Point	x	Elevation	coords
Leeward Structure Toe	-43	0	x_1, e_1
Leeward End of Crest	0	17.5	x_2, e_2
Seaward End of Crest	10	17.5	x_3, e_3
Seaward Structure Toe	25	10	x_4, e_4

Computed Variables			
$T_{m-1,0}$ =	10.8182	s	Spectral Wave Period
L_p =	599.7697	ft	Spectral Wave Length
g_f =	0.7000		Roughness Influence Coefficient
g_b =	0.8515		Wave Obliquity Influence Coefficient

Computed Overtopping q			
tan a =	0.5000		Equivalent Slope
s_p =	0.0075		Spectral Wave Steepness
ξ_p =	11.5448		Iribarren Parameter
R_c =	5.6000	ft	Freeboard
Det q =	0.0890	ft^3/s/ft	Overtopping
max q =	0.0890	ft^3/s/ft	Maximum Overtopping

0.0083 m^3/s/m

Determinitstic Equations

$$\frac{q}{\sqrt{gH_{m0}^3}} = \frac{0.067}{\sqrt{\tan\alpha}}\gamma_b\xi_{m-1,0}\exp\left(-4.3\frac{R_c}{\xi_{m-1,0}H_{m0}\gamma_b\gamma_f\gamma_\beta\gamma_v}\right)$$

$$\frac{q}{\sqrt{gH_{m0}^3}} < 0.2\cdot\exp\left(-2.3\frac{R_c}{H_{m0}\gamma_f\gamma_\beta}\right)$$

Wave overtopping for short-crested waves

$\gamma_\beta = 1 - 0.0033\,|\beta|$ $\quad 0° \le |\beta| \le 80°$

$\gamma_\beta = 1 - 0.0033\,(80)$ $\quad |\beta| > 80°$

Probabilistic Equations

Computed Mean Overtopping q			
Prob q =	0.0890	ft^3/s/ft	Overtopping
	0.0476	ft^3/s/ft	Maximum Overtopping

0.0083 m^3/s/m

Probabilistic Equations

$$\frac{q}{\sqrt{gH_{m0}^3}} = \frac{0.067}{\sqrt{\tan\alpha}}\gamma_b\xi_{m-1,0}\exp\left(-4.75\frac{R_c}{\xi_{m-1,0}H_{m0}\gamma_b\gamma_f\gamma_\beta\gamma_v}\right)$$

$$\frac{q}{\sqrt{gH_{m0}^3}} < 0.2\cdot\exp\left(-2.6\frac{R_c}{H_{m0}\gamma_f\gamma_\beta}\right)$$

Uncertainty

μ = 4.75, σ = 0.5

μ = 2.6, σ = 0.35

2030_2% FLOOD (50 YR) OVERTOPPING

Wave Overtopping of Uniform Structure Slopes

The overtopping is computed based on the equations given in the EurOtop manual.

Legend
User inputs (Input Worksheet)
Intermediate Computations
Final Calculation

Input Wave and Water Level Variables from Input Sheet			
H_{m0} =	5.4000	ft	Wave Height
T_p =	13.1000	s	Wave Period
h =	13.7000	ft	Total Depth at Levee Toe
cot a =	2.0000		Seaward Slope
g_f =	0.7000		Roughness Influence Factor
g_b =	1.0000		Berm
g =	32.2000	ft/s^2	Acceleration of Gravity
b =	45.0000	deg	Wave Obliquity
	1.0000		CASE
H_s/h_B =	0.7800		Breaker Ratio for Breaker Height at xB

Input Structure Geometry from Input Sheet			
Point	x	Elevation	coords
Leeward Structure Toe	-39	6	x_1, e_1
Leeward End of Crest	0	20.5	x_2, e_2
Seaward End of Crest	10	20.5	x_3, e_3
Seaward Structure Toe	31	10	x_4, e_4

Computed Variables			
$T_{m-1,0}$ =	11.9091	s	Spectral Wave Period
L_p =	726.8306	ft	Spectral Wave Length
g_f =	0.7000		Roughness Influence Coefficient
g_b =	0.8515		Wave Obliquity Influence Coefficient

Computed Overtopping q			
tan a =	0.5000		Equivalent Slope
s_p =	0.0074		Spectral Wave Steepness
ξ_p =	11.6016		Iribarren Parameter
R_c =	6.8000	ft	Freeboard
Det q =	0.1105	ft^3/s/ft	Overtopping
max q =	0.1105	ft^3/s/ft	Maximum Overtopping

0.0103 m^3/s/m

Determinitstic Equations

$$\frac{q}{\sqrt{gH_{m0}^3}} = \frac{0.067}{\sqrt{\tan\alpha}}\gamma_b\xi_{m-1,0}\exp\left(-4.3\frac{R_c}{\xi_{m-1,0}H_{m0}\gamma_b\gamma_f\gamma_\beta\gamma_v}\right)$$

$$\frac{q}{\sqrt{gH_{m0}^3}} < 0.2\cdot\exp\left(-2.3\frac{R_c}{H_{m0}\gamma_f\gamma_\beta}\right)$$

Wave overtopping for short-crested waves

$\gamma_\beta = 1 - 0.0033\,|\beta|$ $\quad 0° \le |\beta| \le 80°$

$\gamma_\beta = 1 - 0.0033\,(80)$ $\quad |\beta| > 80°$

Probabilistic Equations

Computed Mean Overtopping q			
Prob q =	0.1105	ft^3/s/ft	Overtopping
	0.0586	ft^3/s/ft	Maximum Overtopping

0.0103 m^3/s/m

Probabilistic Equations

$$\frac{q}{\sqrt{gH_{m0}^3}} = \frac{0.067}{\sqrt{\tan\alpha}}\gamma_b\xi_{m-1,0}\exp\left(-4.75\frac{R_c}{\xi_{m-1,0}H_{m0}\gamma_b\gamma_f\gamma_\beta\gamma_v}\right)$$

$$\frac{q}{\sqrt{gH_{m0}^3}} < 0.2\cdot\exp\left(-2.6\frac{R_c}{H_{m0}\gamma_f\gamma_\beta}\right)$$

Uncertainty

μ = 4.75, σ = 0.5

μ = 2.6, σ = 0.35

2030_1% FLOOD (100 YR) OVERTOPPING

Wave Overtopping of Uniform Structure Slopes

The overtopping is computed based on the equations given in the EurOtop manual.

Legend
User inputs (Input Worksheet)
Intermediate Computations
Final Calculation

Input Wave and Water Level Variables from Input Sheet			
H_{m0} =	6.1000	ft	Wave Height
T_p =	13.9000	s	Wave Period
h =	15.2000	ft	Total Depth at Levee Toe
$\cot\alpha$ =	2.0000		Seaward Slope
g_f =	0.7000		Roughness Influence Factor
g_b =	1.0000		Berm
g =	32.2000	ft/s^2	Acceleration of Gravity
b =	45.0000	deg	Wave Obliquity
	1.0000		CASE
H_s/h_B =	0.7800		Breaker Ratio for Breaker Height at xB

Input Structure Geometry from Input Sheet			
Point	x	Elevation	coords
Leeward Structure Toe	-46	6	x_1, e_1
Leeward End of Crest	0	23.5	x_2, e_2
Seaward End of Crest	10	23.5	x_3, e_3
Seaward Structure Toe	37	10	x_4, e_4

Computed Variables			
$T_{m-1,0}$ =	12.6364	s	Spectral Wave Period
L_p =	818.3145	ft	Spectral Wave Length
g_f =	0.7000		Roughness Influence Coefficient
g_b =	0.8515		Wave Obliquity Influence Coefficient

Computed Overtopping q			
$\tan\alpha$ =	0.5000		Equivalent Slope
s_p =	0.0075		Spectral Wave Steepness
$\xi_{m-1,0}$ =	11.5823		Iribarren Parameter
R_c =	8.3000	ft	Freeboard
Det q =	0.0897	ft^3/s/ft	Overtopping
max q =	0.0897	ft^3/s/ft	Maximum Overtopping

0.0083 m^3/s/m

Determinitstic Equations

$$\frac{q}{\sqrt{gH_{m0}^3}} = \frac{0.067}{\sqrt{\tan\alpha}}\gamma_b \xi_{m-1,0} \exp\left(-4.3\frac{R_c}{\xi_{m-1,0}H_{m0}\gamma_b\gamma_f\gamma_\beta\gamma_v}\right)$$

$$\frac{q}{\sqrt{gH_{m0}^3}} < 0.2\cdot\exp\left(-2.3\frac{R_c}{H_{m0}\gamma_f\gamma_\beta}\right)$$

Wave overtopping for short-crested waves

$\gamma_\beta = 1 - 0.0033\,|\beta|$ $\quad 0° \le |\beta| \le 80°$

$\gamma_\beta = 1 - 0.0033\,(80)$ $\quad |\beta| > 80°$

Probabilistic Equations

Computed Mean Overtopping q			
Prob q =	0.0897	ft^3/s/ft	Overtopping
	0.0452	ft^3/s/ft	Maximum Overtopping

0.0083 m^3/s/m

Probabilistic Equations

$$\frac{q}{\sqrt{gH_{m0}^3}} = \frac{0.067}{\sqrt{\tan\alpha}}\gamma_b \xi_{m-1,0} \exp\left(-4.75\frac{R_c}{\xi_{m-1,0}H_{m0}\gamma_b\gamma_f\gamma_\beta\gamma_v}\right)$$

$$\frac{q}{\sqrt{gH_{m0}^3}} < 0.2\cdot\exp\left(-2.6\frac{R_c}{H_{m0}\gamma_f\gamma_\beta}\right)$$

Uncertainty

μ = 4.75, σ = 0.5

μ = 2.6, σ = 0.35

2079_10% FLOOD (10 YR) OVERTOPPING

Wave Overtopping of Uniform Structure Slopes

The overtopping is computed based on the equations given in the EurOtop manual.

Legend
User inputs (Input Worksheet)
Intermediate Computations
Final Calculation

Input Wave and Water Level Variables from Input Sheet			
H_{m0} =	3.7000	ft	Wave Height
T_p =	10.6000	s	Wave Period
h =	11.6000	ft	Total Depth at Levee Toe
cot a =	2.0000		Seaward Slope
g_f =	0.7000		Roughness Influence Factor
g_b =	1.0000		Berm
g =	32.2000	ft/s^2	Acceleration of Gravity
b =	45.0000	deg	Wave Obliquity
	1.0000		CASE
H_B/h_B =	0.7800		Breaker Ratio for Breaker Height at xB

Input Structure Geometry from Input Sheet			
Point	x	Elevation	coords
Leeward Structure Toe	-37	0	x_1, e_1
Leeward End of Crest	0	15	x_2, e_2
Seaward End of Crest	10	15	x_3, e_3
Seaward Structure Toe	13	13.5	x_4, e_4

Computed Variables			
$T_{m-1,0}$ =	9.6364	s	Spectral Wave Period
L_p =	475.8854	ft	Spectral Wave Length
g_f =	0.7000		Roughness Influence Coefficient
g_b =	0.8515		Wave Obliquity Influence Coefficient

Computed Overtopping q			
tan a =	0.5000		Equivalent Slope
s_p =	0.0078		Spectral Wave Steepness
ξ_m =	11.3410		Iribarren Parameter
R_c =	3.4000	ft	Freeboard
Det q =	0.2330	ft^3/s/ft	Overtopping
max q =	0.2330	ft^3/s/ft	Maximum Overtopping

0.0216 m^3/s/m

Determinitstic Equations

$$\frac{q}{\sqrt{gH_{m0}^3}} = \frac{0.067}{\sqrt{\tan\alpha}}\gamma_b\xi_{m-1,0}\exp\left(-4.3\frac{R_c}{\xi_{m-1,0}H_{m0}\gamma_b\gamma_f\gamma_\beta\gamma_v}\right)$$

$$\frac{q}{\sqrt{gH_{m0}^3}} < 0.2\cdot\exp\left(-2.3\frac{R_c}{H_{m0}\gamma_f\gamma_\beta}\right)$$

Wave overtopping for short-crested waves

$\gamma_\beta = 1 - 0.0033\,|\beta|$ $\quad 0° \le |\beta| \le 80°$

$\gamma_\beta = 1 - 0.0033\,(80)$ $\quad |\beta| > 80°$

Probabilistic Equations

Computed Mean Overtopping q			
Prob q =	0.2330	ft^3/s/ft	Overtopping
	0.1467	ft^3/s/ft	Maximum Overtopping

0.0216 m^3/s/m

Probabilistic Equations

$$\frac{q}{\sqrt{gH_{m0}^3}} = \frac{0.067}{\sqrt{\tan\alpha}}\gamma_b\xi_{m-1,0}\exp\left(-4.75\frac{R_c}{\xi_{m-1,0}H_{m0}\gamma_b\gamma_f\gamma_\beta\gamma_v}\right)$$

$$\frac{q}{\sqrt{gH_{m0}^3}} < 0.2\cdot\exp\left(-2.6\frac{R_c}{H_{m0}\gamma_f\gamma_\beta}\right)$$

Uncertainty

μ = 4.75, σ = 0.5

μ = 2.6, σ = 0.35

2079_5% FLOOD (20 YR) OVERTOPPING

Wave Overtopping of Uniform Structure Slopes

The overtopping is computed based on the equations given in the EurOtop manual.

Legend
User inputs (Input Worksheet)
Intermediate Computations
Final Calculation

Input Wave and Water Level Variables from Input Sheet			
H_{m0} =	4.5000	ft	Wave Height
T_p =	11.9000	s	Wave Period
h =	12.9000	ft	Total Depth at Levee Toe
cot a =	2.0000		Seaward Slope
g_f =	0.7000		Roughness Influence Factor
g_b =	1.0000		Berm
g =	32.2000	ft/s^2	Acceleration of Gravity
b =	45.0000	deg	Wave Obliquity
	1.0000		CASE
H_B/h_B =	0.7800		Breaker Ratio for Breaker Height at xB

Input Structure Geometry from Input Sheet			
Point	x	Elevation	coords
Leeward Structure Toe	-43	0	x_1, e_1
Leeward End of Crest	0	17.5	x_2, e_2
Seaward End of Crest	10	17.5	x_3, e_3
Seaward Structure Toe	25	10	x_4, e_4

Computed Variables			
$T_{m-1,0}$ =	10.8182	s	Spectral Wave Period
L_p =	599.7697	ft	Spectral Wave Length
g_f =	0.7000		Roughness Influence Coefficient
g_b =	0.8515		Wave Obliquity Influence Coefficient

Computed Overtopping q			
tan a =	0.5000		Equivalent Slope
s_p =	0.0075		Spectral Wave Steepness
ξ_m =	11.5448		Iribarren Parameter
R_c =	4.6000	ft	Freeboard
Det q =	0.2098	ft^3/s/ft	Overtopping
max q =	0.2098	ft^3/s/ft	Maximum Overtopping

0.0195 m^3/s/m

Determinitstic Equations

$$\frac{q}{\sqrt{gH_{m0}^3}} = \frac{0.067}{\sqrt{\tan\alpha}}\gamma_b\xi_{m-1,0}\exp\left(-4.3\frac{R_c}{\xi_{m-1,0}H_{m0}\gamma_b\gamma_f\gamma_\beta\gamma_v}\right)$$

$$\frac{q}{\sqrt{gH_{m0}^3}} < 0.2\cdot\exp\left(-2.3\frac{R_c}{H_{m0}\gamma_f\gamma_\beta}\right)$$

Wave overtopping for short-crested waves

$\gamma_\beta = 1 - 0.0033\,|\beta|$ $\quad 0° \le |\beta| \le 80°$

$\gamma_\beta = 1 - 0.0033\,(80)$ $\quad |\beta| > 80°$

Probabilistic Equations

Computed Mean Overtopping q			
Prob q =	0.2098	ft^3/s/ft	Overtopping
	0.1254	ft^3/s/ft	Maximum Overtopping

0.0195 m^3/s/m

Probabilistic Equations

$$\frac{q}{\sqrt{gH_{m0}^3}} = \frac{0.067}{\sqrt{\tan\alpha}}\gamma_b\xi_{m-1,0}\exp\left(-4.75\frac{R_c}{\xi_{m-1,0}H_{m0}\gamma_b\gamma_f\gamma_\beta\gamma_v}\right)$$

$$\frac{q}{\sqrt{gH_{m0}^3}} < 0.2\cdot\exp\left(-2.6\frac{R_c}{H_{m0}\gamma_f\gamma_\beta}\right)$$

Uncertainty

μ = 4.75, σ = 0.5

μ = 2.6, σ = 0.35

2079_2% FLOOD (50 YR) OVERTOPPING

Wave Overtopping of Uniform Structure Slopes

The overtopping is computed based on the equations given in the EurOtop manual.

Legend
User inputs (Input Worksheet)
Intermediate Computations
Final Calculation

Input Wave and Water Level Variables from Input Sheet			
H_{m0} =	5.4000	ft	Wave Height
T_p =	13.1000	s	Wave Period
h =	14.7000	ft	Total Depth at Levee Toe
cot a =	2.0000		Seaward Slope
g_f =	0.7000		Roughness Influence Factor
g_b =	1.0000		Berm
g =	32.2000	ft/s^2	Acceleration of Gravity
b =	45.0000	deg	Wave Obliquity
	1.0000		CASE
H_s/h_B =	0.7800		Breaker Ratio for Breaker Height at xB

Input Structure Geometry from Input Sheet			
Point	x	Elevation	coords
Leeward Structure Toe	-39	6	x_1, e_1
Leeward End of Crest	0	20.5	x_2, e_2
Seaward End of Crest	10	20.5	x_3, e_3
Seaward Structure Toe	31	10	x_4, e_4

Computed Variables			
$T_{m-1,0}$ =	11.9091	s	Spectral Wave Period
L_p =	726.8306	ft	Spectral Wave Length
g_f =	0.7000		Roughness Influence Coefficient
g_b =	0.8515		Wave Obliquity Influence Coefficient

Computed Overtopping q			
tan a =	0.5000		Equivalent Slope
s_p =	0.0074		Spectral Wave Steepness
ξ_p =	11.6016		Iribarren Parameter
R_c =	5.8000	ft	Freeboard
Det q =	0.2257	ft^3/s/ft	Overtopping
max q =	0.2257	ft^3/s/ft	Maximum Overtopping

0.0210 m^3/s/m

Determinitstic Equations

$$\frac{q}{\sqrt{gH_{m0}^3}} = \frac{0.067}{\sqrt{\tan\alpha}}\gamma_b\xi_{m-1,0}\exp\left(-4.3\frac{R_c}{\xi_{m-1,0}H_{m0}\gamma_b\gamma_f\gamma_\beta\gamma_v}\right)$$

$$\frac{q}{\sqrt{gH_{m0}^3}} < 0.2\cdot\exp\left(-2.3\frac{R_c}{H_{m0}\gamma_f\gamma_\beta}\right)$$

Wave overtopping for short-crested waves

$\gamma_\beta = 1 - 0.0033\,|\beta|$ $\quad 0° \le |\beta| \le 80°$

$\gamma_\beta = 1 - 0.0033\,(80)$ $\quad |\beta| > 80°$

Probabilistic Equations

Computed Mean Overtopping q			
Prob q =	0.2257	ft^3/s/ft	Overtopping
	0.1315	ft^3/s/ft	Maximum Overtopping

0.0210 m^3/s/m

Probabilistic Equations

$$\frac{q}{\sqrt{gH_{m0}^3}} = \frac{0.067}{\sqrt{\tan\alpha}}\gamma_b\xi_{m-1,0}\exp\left(-4.75\frac{R_c}{\xi_{m-1,0}H_{m0}\gamma_b\gamma_f\gamma_\beta\gamma_v}\right)$$

$$\frac{q}{\sqrt{gH_{m0}^3}} < 0.2\cdot\exp\left(-2.6\frac{R_c}{H_{m0}\gamma_f\gamma_\beta}\right)$$

Uncertainty

μ = 4.75, σ = 0.5

μ = 2.6, σ = 0.35

2079_1% FLOOD (100 YR) OVERTOPPING

Wave Overtopping of Uniform Structure Slopes

The overtopping is computed based on the equations given in the EurOtop manual.

Legend
User inputs (Input Worksheet)
Intermediate Computations
Final Calculation

Input Wave and Water Level Variables from Input Sheet			
H_{m0} =	6.1000	ft	Wave Height
T_p =	13.9000	s	Wave Period
h =	16.2000	ft	Total Depth at Levee Toe
$\cot\alpha$ =	2.0000		Seaward Slope
g_f =	0.7000		Roughness Influence Factor
g_b =	1.0000		Berm
g =	32.2000	ft/s^2	Acceleration of Gravity
b =	45.0000	deg	Wave Obliquity
	1.0000		CASE
H_s/h_B =	0.7800		Breaker Ratio for Breaker Height at xB

Input Structure Geometry from Input Sheet			
Point	x	Elevation	coords
Leeward Structure Toe	-46	6	x_1, e_1
Leeward End of Crest	0	23.5	x_2, e_2
Seaward End of Crest	10	23.5	x_3, e_3
Seaward Structure Toe	37	10	x_4, e_4

Computed Variables			
$T_{m-1,0}$ =	12.6364	s	Spectral Wave Period
L_p =	818.3145	ft	Spectral Wave Length
g_f =	0.7000		Roughness Influence Coefficient
g_b =	0.8515		Wave Obliquity Influence Coefficient

Computed Overtopping q			
$\tan\alpha$ =	0.5000		Equivalent Slope
s_p =	0.0075		Spectral Wave Steepness
$\xi_{m-1,0}$ =	11.5823		Iribarren Parameter
R_c =	7.3000	ft	Freeboard
Det q =	0.1688	ft^3/s/ft	Overtopping
max q =	0.1688	ft^3/s/ft	Maximum Overtopping

0.0157 m^3/s/m

Determinitstic Equations

$$\frac{q}{\sqrt{gH_{m0}^3}} = \frac{0.067}{\sqrt{\tan\alpha}}\gamma_b\xi_{m-1,0}\exp\left(-4.3\frac{R_c}{\xi_{m-1,0}H_{m0}\gamma_b\gamma_f\gamma_\beta\gamma_v}\right)$$

$$\frac{q}{\sqrt{gH_{m0}^3}} < 0.2\cdot\exp\left(-2.3\frac{R_c}{H_{m0}\gamma_f\gamma_\beta}\right)$$

Wave overtopping for short-crested waves

$\gamma_\beta = 1 - 0.0033\,|\beta|$ $\quad 0° \le |\beta| \le 80°$

$\gamma_\beta = 1 - 0.0033\,(80)$ $\quad |\beta| > 80°$

Probabilistic Equations

Computed Mean Overtopping q			
Prob q =	0.1688	ft^3/s/ft	Overtopping
	0.0924	ft^3/s/ft	Maximum Overtopping

0.0157 m^3/s/m

Probabilistic Equations

$$\frac{q}{\sqrt{gH_{m0}^3}} = \frac{0.067}{\sqrt{\tan\alpha}}\gamma_b\xi_{m-1,0}\exp\left(-4.75\frac{R_c}{\xi_{m-1,0}H_{m0}\gamma_b\gamma_f\gamma_\beta\gamma_v}\right)$$

$$\frac{q}{\sqrt{gH_{m0}^3}} < 0.2\cdot\exp\left(-2.6\frac{R_c}{H_{m0}\gamma_f\gamma_\beta}\right)$$

Uncertainty

μ = 4.75, σ = 0.5

μ = 2.6, σ = 0.35

ATTACHMENT HH&C-2: HAND CALCULATIONS OF WAVE FORCES ON A VERTICAL WALL

Calculations by: K. McElroy

Wave Forces on Vertical Wall: 11.5' FT NAVD88 20 yr Storm

Given:

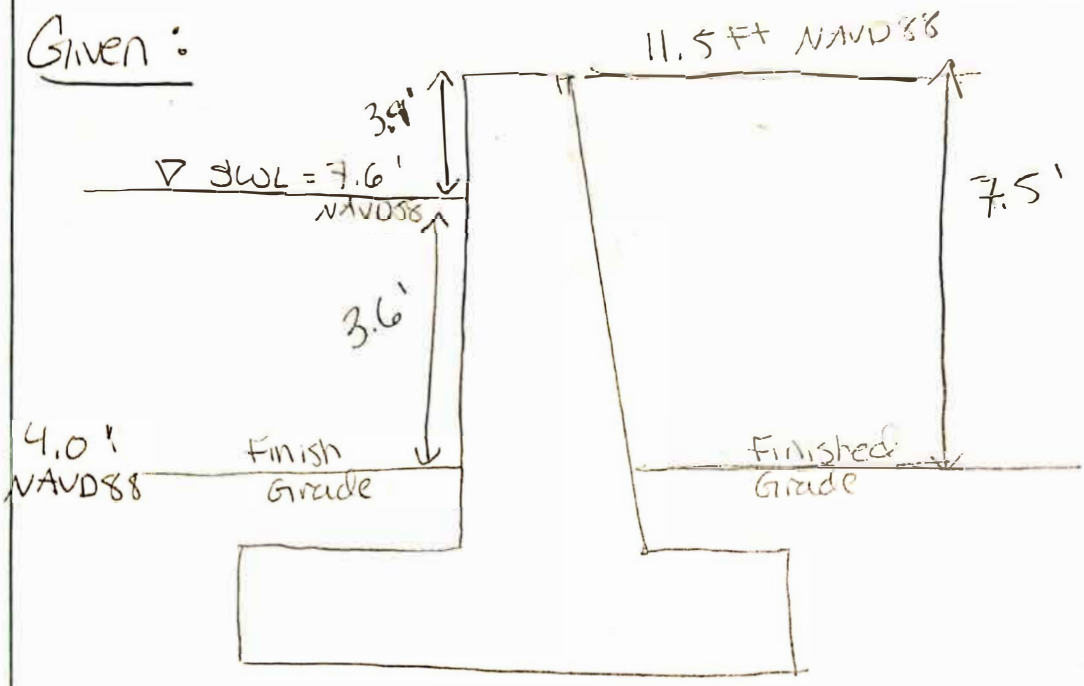

- $H_s = 2.1$ ft
- $T = 2.4$ sec

> From FEMA SWFL Study Statistics

- $h_w = 7.5'$
- $H_{max} = 1.8 H_s = 3.78$ ft
- $d_s = 3.6$ ft
- $h_c = 7.5 - 3.6 = 3.9$ ft
- $d_s = D$ since $m = 0$, no mound

$$L = \frac{gT^2}{2\pi} = \frac{32.2\frac{ft}{s^2}(2.4s)^2}{2(3.14)} = 29.53 \text{ ft}$$

$$L_{local} = L\sqrt{\tanh\left(\frac{4\pi d}{T^2 g}\right)} = 23.703$$

Solution:

Used Goda's Formulas to calculate wave forces on vertical wall. Equations are applicable to either breaking or non-breaking waves.

$$\eta^* = 0.75(1+\cos\beta)\lambda_1 H_{max} \qquad h_c = 3.9' < \eta^*$$

$$= 0.75(1+\cos 0)\,3.78\text{ft}$$

$$= 5.67\text{ft}$$

$$\alpha_1 = 0.6 + 0.5\left[\frac{\frac{4\pi D}{L}}{\sinh\left(\frac{4\pi D}{L}\right)}\right]^2 = 0.6 + 0.5\left[\frac{\frac{4\pi\, 3.6\text{ft}}{23.703}}{\sinh\left(\frac{4\pi\, 3.6\text{ft}}{23.703}\right)}\right]^2$$

$$= 0.6 + 0.5\left[\frac{1.908}{\sinh(1.908)}\right]^2 = 0.6 + 0.5\left[\frac{1.908}{3.292}\right]^2$$

$$\boxed{\alpha_1 = 0.767}$$

Scanned with CamScanner

$$\alpha_2 = \min\left(\frac{h_b - d}{3h_b}\left(\frac{H_{max}}{d}\right)^2, \frac{2d}{H_{max}}\right) = \left(\frac{3.6-3.6}{3\cdot 3.6}\left(\frac{3.78}{3.6}\right)^2, \frac{2\cdot 3.6}{3.78}\right)$$

$$\boxed{\alpha_2 = \min(0, 1.904) = 0}$$

$$\alpha_3 = 1 - \frac{h_{wl} - h_c}{h_s}\left[1 - \frac{1}{\cosh\left(\frac{2\pi h_s}{L}\right)}\right]$$

$$= 1 - \frac{7.5 - 3.9}{3.6}\left[1 - \frac{1}{\cosh(0.954)}\right]$$

$$\boxed{\alpha_3 = 0.67}$$

$$P_1 = 0.5(1+\cos\beta)(\lambda_1\alpha_1 + \lambda_2\alpha_2\cos^2\beta)\rho_w g H_{max}$$

$$= 0.5(1+\cos 0^\circ)(1\cdot 0.767 + 0)(64\,\tfrac{lb}{ft^3})\,3.78\,ft$$

$$\boxed{P_1 = 185.5\ lb/ft^2}$$

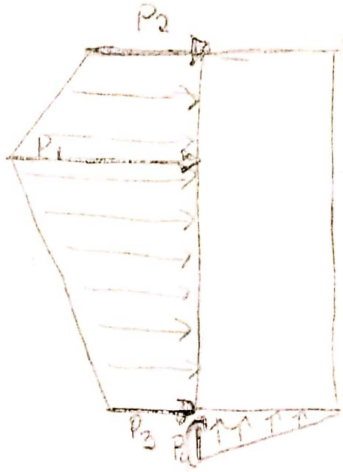

$$P_2 = \left(1 - \frac{h_c}{d^*}\right)P_1 = \left(1 - \frac{3.9}{5.67}\right)185.5$$

$$\boxed{P_2 = 57.9\ lb/ft^2}$$

$$P_3 = \alpha_3 P_1 = 0.67(185.5)$$

$$\boxed{P_3 = 124.28\ lb/ft^2}$$

$$P_u = 0.5(1+\cos\beta)\lambda_3\alpha_1\alpha_3\rho_w g H_{max}$$

$$= 0.5(1+1)(0.767)(0.67)(64)(3.78)$$

$$\boxed{P_u = 124.32}$$

WAVE FORCE AND MOMENTS

$$F_H = 0.5(P_1 + P_2)h_c + 0.5(P_1 + P_3)(h_w - h_c)$$

$$= 0.5(185.5 + 57.9)\,3.9 + 0.5(185.5 + 124.28)(7.5 - 3.9)$$

$$\boxed{F = 1032.23\ lb/ft}$$ → Total horizontal force to breaking wave

OVERTURNING MOMENT:

$$M_H = \frac{1}{6}(2P_1 + P_3)(h_w - h_c)^2 + \tfrac{1}{2}(P_1 + P_2)(h_w - h_c)h_c + \frac{1}{6}(P_1 + 2P_2)h_c^2$$

$$= \frac{1}{6}(2(185.5) + 124.3)(3.6)^2 + 0.5(185.5 + 57.9)(3.6)(3.9) + \frac{1}{6}(185.5 + 2(57.9))(3.9)^2$$

$$\boxed{M_H = 3542.3\ lb\text{-}ft/ft}$$

Scanned with CamScanner

Wave Forces on Vertical Wall: 13.5' NAVD88 20 yr Storm

Given:

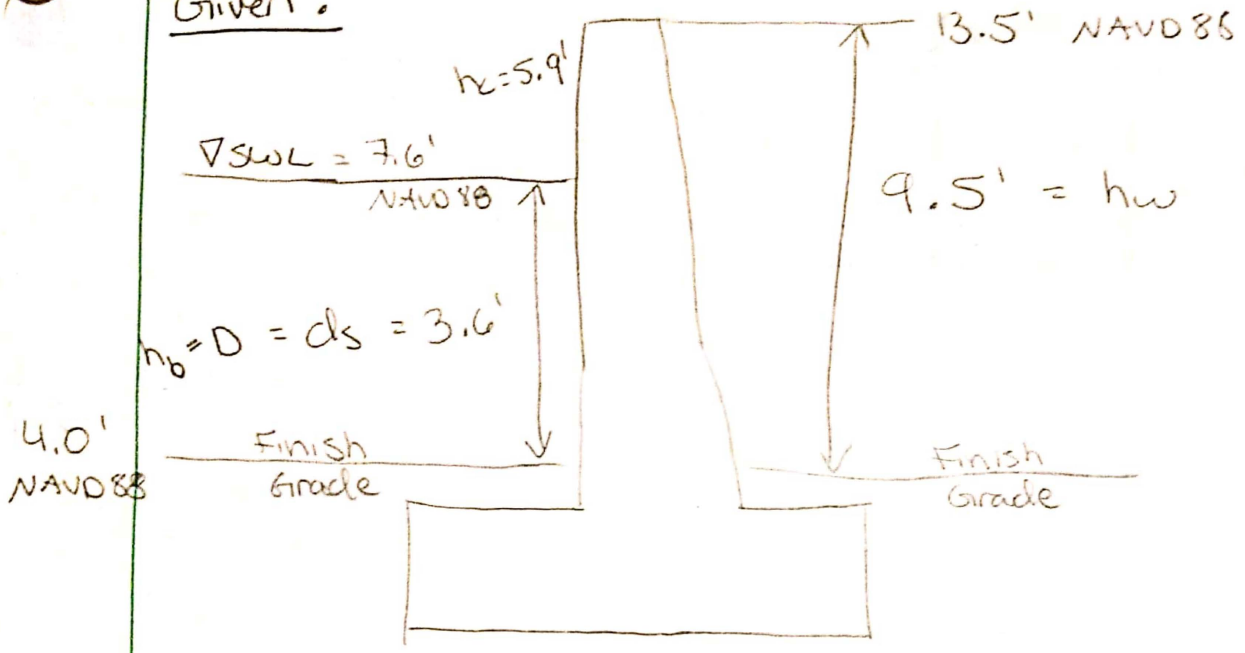

- $H_s = 2.1$ ft
- $T = 2.4$ sec

> From FEMA SWFL Study Statistics

- $H_{max} = 1.8(2.1) = 3.78$ ft
- $L = \frac{gT^2}{2\pi} = \frac{32.2(2.4)}{2(3.14)} = 29.53$ ft
- $L_{local} = L\sqrt{\tanh\left(\frac{4\pi^2 d}{T^2 g}\right)} = 23.703$ ft

Solution:

USED GODA'S FORMULAS TO CALCULATE WAVE FORCES ON VERTICAL WALL. EQUATIONS ARE APPLICABL TO EITHER BREAKING OR NON-BREAKING WAVES.

$$\eta^* = 0.75(1 + \cos\beta)\lambda H_{max}$$
$$= 0.75(1+1)(3.78\text{ft})$$
$$= 5.67\text{ft}$$

$h_c = 5.9' > \eta^*$

$$\alpha_1 = 0.6 + 0.5\left[\frac{\frac{4\pi D}{L}}{\sinh\left(\frac{4\pi D}{L}\right)}\right]^2 = 0.6 + 0.5\left[\frac{1.90857}{\sinh(1.90857)}\right]^2$$

$$\boxed{\alpha_1 = 0.767}$$

Scanned with CamScanner

$$\alpha_2 = \min\left(\frac{h_b - d}{3h_b}\left(\frac{H_{max}}{d}\right)^2, \frac{2d}{H_{max}}\right) = \left(\frac{3.6-3.6}{3(3.6)}\left(\frac{3.78}{3.6}\right)^2, \frac{2(3.6)}{3.78}\right)$$

$$\boxed{\alpha_2 = \min(0, 1.904) = 0}$$

$$\alpha_3 = 1 - \frac{h_w - h_c}{h_s}\left[1 - \frac{1}{\cosh\left(\frac{2\pi h_s}{L}\right)}\right]$$

$$\alpha_3 = 1 - \frac{9.5-5.9}{3.6}\left[1 - \frac{1}{\cosh\left(\frac{2\pi \cdot 3.6}{L}\right)}\right]$$

$$\alpha_3 = 1 - 1\left[1 - \frac{1}{\cosh(0.954)}\right]$$

$$\boxed{\alpha_3 = 0.67}$$

$$P_1 = 0.5(1+\cos\beta)(\lambda_1\alpha_1 + \lambda_2\alpha_2\cos^2\beta)\rho_w g H_{max}$$

$$= 0.5(1+\cos 0^\circ)(0.767 + 0)(64)(3.78)$$

$$= 185.5 \ \text{lb/ft}^2$$

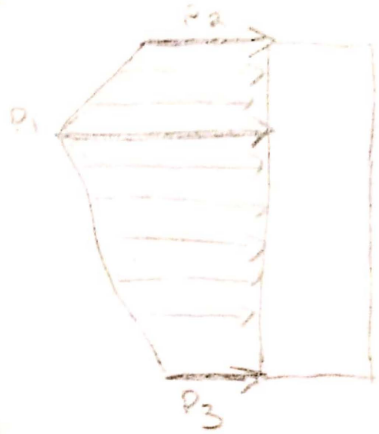

$$P_2 = 0 \text{ for } h_c > \eta^*$$

$$P_3 = \alpha_3 P_1 = 0.67(185.5)$$

$$= 124.3 \ \text{lb/ft}^2$$

WAVE FORCE AND MOMENT:

$$F_H = 0.5(P_1 + P_2)h_c + 0.5(P_1 + P_3)(h_w - h_c)$$

$$= 0.5(185.5 + 0)5.9 + 0.5(185.5 + 124.28)(9.5 - 5.9)$$

$$\boxed{F_H = 1104.8 \ \text{lb/ft}^3}$$ → Total horizontal force to breaking wave

OVERTURNING MOMENT:

$$M_H = \frac{1}{6}(2P_1 + P_3)(h_w - h_c)^2 + \frac{1}{2}(P_1 + P_2)(h_w - h_c)h_c + \frac{1}{6}(P_1 + 2P_2)(h_c^2)$$

$$= \frac{1}{6}(2(185.5) + 124.3)(9.5 - 5.9)^2 + 0.5(185.5 + 0)(9.5 - 5.9)(5.9) + 1/6(185.5 + 2(0))(5.9)^2$$

$$\boxed{M_H = 4116 \ \frac{\text{lb-ft}}{\text{ft}}}$$

Scanned with CamScanner

ATTACHMENT HH&C-3: FEMA SWFL STORM PARAMETERS

Source:
FEMA, 2017. Southwest Florida Storm Surge Study, Intermediate Data Submittal #2 Fifth Submission, FEMA IDIQ Contract HSFEHQ-09-D-0369. Federal Emergency Management Agency.

DRAFT

APPENDIX F

JPM-OS1B STORM SET CHARACTERISTICS AND RANDOM STARTING TIME TABLES

Table F-1: JPM-OS1b Storm Set: Characteristics at Landfall

Storm Name	DP (mb)	Rp (nmi)	Vf (m/s)	Heading (deg)	B	Landfall Long.	Landfall Lat.	Rate (1/year)
JPM-OS1_Exit_0001_005	67.17	16.77	6.20	-37.62	1.31	-82.34	26.96	2.580E-04
JPM-OS1_Exit_0001_006	57.10	18.43	6.20	-37.62	1.31	-82.83	27.97	2.530E-04
JPM-OS1_Exit_0002_004	86.29	14.50	6.20	-63.08	1.15	-81.15	25.39	2.170E-04
JPM-OS1_Exit_0002_005	79.28	15.23	6.20	-63.08	1.15	-81.68	25.95	2.860E-04
JPM-OS1_Exit_0002_006	74.39	15.81	6.20	-63.08	1.15	-81.95	26.39	2.950E-04
JPM-OS1_Exit_0002_007	68.64	16.56	6.20	-63.08	1.15	-82.26	26.85	2.640E-04
JPM-OS1_Exit_0002_008	63.69	17.30	6.20	-63.08	1.15	-82.55	27.29	2.700E-04
JPM-OS1_Exit_0002_009	59.80	17.94	6.20	-63.08	1.15	-82.73	27.69	2.610E-04
JPM-OS1_Exit_0003_005	20.49	66.35	6.20	-38.77	1.26	-82.31	26.92	2.470E-03
JPM-OS1_Exit_0008_004	22.84	62.30	6.20	-90.62	1.25	-81.33	25.68	2.540E-03
JPM-OS1_Exit_0008_005	20.74	65.88	6.20	-90.62	1.25	-82.22	26.79	2.540E-03
JPM-OS1_Exit_0008_006	19.10	69.11	6.20	-90.62	1.25	-82.81	27.90	2.420E-03
JPM-OS1_Exit_0009_003	87.79	14.36	6.20	-92.02	1.31	-81.11	25.23	1.930E-04
JPM-OS1_Exit_0009_004	85.04	14.63	6.20	-92.02	1.31	-81.18	25.51	2.360E-04
JPM-OS1_Exit_0009_005	81.55	14.99	6.20	-92.02	1.31	-81.47	25.79	2.770E-04
JPM-OS1_Exit_0009_006	78.00	15.38	6.20	-92.02	1.31	-81.76	26.06	2.850E-04
JPM-OS1_Exit_0009_007	75.01	15.73	6.20	-92.02	1.31	-81.92	26.34	3.000E-04
JPM-OS1_Exit_0009_008	71.74	16.14	6.20	-92.02	1.31	-82.09	26.61	2.810E-04
JPM-OS1_Exit_0009_009	68.14	16.63	6.20	-92.02	1.31	-82.29	26.89	2.620E-04
JPM-OS1_Exit_0009_010	65.01	17.09	6.20	-92.02	1.31	-82.49	27.16	2.550E-04
JPM-OS1_Exit_0009_011	62.22	17.53	6.20	-92.02	1.31	-82.62	27.44	2.660E-04
JPM-OS1_Exit_0011_004	41.74	22.11	6.20	-64.27	1.29	-81.16	25.42	1.020E-03
JPM-OS1_Exit_0011_005	37.59	23.49	6.20	-64.27	1.29	-81.83	26.18	1.280E-03
JPM-OS1_Exit_0011_006	34.39	24.74	6.20	-64.27	1.29	-82.25	26.83	1.220E-03
JPM-OS1_Exit_0011_007	31.68	25.94	6.20	-64.27	1.29	-82.62	27.45	1.220E-03
JPM-OS1_Exit_0012_004	41.89	22.06	6.20	-92.00	1.12	-81.15	25.38	9.930E-04
JPM-OS1_Exit_0012_005	39.64	22.78	6.20	-92.00	1.12	-81.48	25.79	1.270E-03
JPM-OS1_Exit_0012_006	37.48	23.53	6.20	-92.00	1.12	-81.85	26.20	1.280E-03
JPM-OS1_Exit_0012_007	35.49	24.29	6.20	-92.00	1.12	-82.10	26.62	1.280E-03
JPM-OS1_Exit_0012_008	33.36	25.17	6.20	-92.00	1.12	-82.39	27.03	1.160E-03
JPM-OS1_Exit_0012_009	31.72	25.92	6.20	-92.00	1.12	-82.62	27.44	1.220E-03
JPM-OS1_Exit_0016_005	58.82	34.03	13.33	-63.67	1.22	-81.59	25.88	1.170E-03
JPM-OS1_Exit_0016_006	49.99	37.40	13.33	-63.67	1.22	-82.30	26.90	1.080E-03
JPM-OS1_Exit_0016_007	43.67	40.44	13.33	-63.67	1.22	-82.78	27.81	1.060E-03
JPM-OS1_Exit_0017_004	111.93	22.40	6.20	-63.67	1.32	-81.10	25.16	8.340E-05
JPM-OS1_Exit_0017_005	107.24	22.96	6.20	-63.67	1.32	-81.52	25.83	1.250E-04
JPM-OS1_Exit_0017_006	99.79	23.94	6.20	-63.67	1.32	-82.03	26.53	1.280E-04
JPM-OS1_Exit_0017_007	89.73	25.46	6.20	-63.67	1.32	-82.51	27.20	1.230E-04
JPM-OS1_Exit_0017_008	81.67	26.89	6.20	-63.67	1.32	-82.76	27.77	1.150E-04
JPM-OS1_Exit_0018_004	62.23	32.93	2.88	-63.67	1.22	-81.19	25.54	9.920E-04
JPM-OS1_Exit_0018_005	52.10	36.51	2.88	-63.67	1.22	-82.14	26.67	1.140E-03
JPM-OS1_Exit_0018_006	44.88	39.81	2.88	-63.67	1.22	-82.70	27.62	1.080E-03
JPM-OS1_Exit_0019_003	63.81	9.20	13.33	-63.67	1.22	-81.14	25.35	2.530E-04
JPM-OS1_Exit_0019_004	61.81	9.37	13.33	-63.67	1.22	-81.22	25.58	2.890E-04
JPM-OS1_Exit_0019_005	57.43	9.78	13.33	-63.67	1.22	-81.74	26.02	3.340E-04
JPM-OS1_Exit_0019_006	55.33	9.99	13.33	-63.67	1.22	-81.89	26.29	3.480E-04
JPM-OS1_Exit_0019_007	53.07	10.24	13.33	-63.67	1.22	-82.06	26.57	3.320E-04
JPM-OS1_Exit_0019_008	50.42	10.55	13.33	-63.67	1.22	-82.27	26.86	3.080E-04
JPM-OS1_Exit_0019_009	48.09	10.84	13.33	-63.67	1.22	-82.48	27.15	2.900E-04
JPM-OS1_Exit_0019_010	46.35	11.07	13.33	-63.67	1.22	-82.60	27.40	3.120E-04
JPM-OS1_HC_LF_A_0001_005	71.48	16.18	6.20	77.44	1.34	-82.69	28.93	1.080E-04
JPM-OS1_HC_LF_A_0002_005	71.53	16.17	6.20	43.92	1.17	-82.69	28.94	1.070E-04
JPM-OS1_HC_LF_A_0003_005	28.78	54.50	6.20	75.70	1.24	-82.68	28.92	1.720E-03
JPM-OS1_HC_LF_A_0003_005a	29.02	54.24	6.20	74.25	1.24	-82.75	28.42	1.060E-03
JPM-OS1_HC_LF_A_0004_005	28.48	13.89	6.20	18.65	1.23	-82.72	28.60	5.710E-04
JPM-OS1_HC_LF_A_0005_005	26.32	28.89	2.87	43.25	1.13	-82.80	28.30	1.750E-03

DRAFT

Storm Name	DP (mb)	Rp (nmi)	Vf (m/s)	Heading (deg)	B	Landfall Long.	Landfall Lat.	Rate (1/year)
JPM-OS1_HC_LF_A_0006_005	28.82	13.79	6.20	75.70	1.24	-82.70	28.96	4.140E-04
JPM-OS1_HC_LF_A_0007_005	40.78	22.41	6.20	78.96	1.15	-82.64	28.85	7.620E-04
JPM-OS1_HC_LF_A_0009_005	71.71	16.15	6.20	17.86	1.33	-82.70	28.96	1.040E-04
JPM-OS1_HC_LF_A_0010_005	28.77	13.81	6.20	43.89	0.99	-82.68	28.91	4.440E-04
JPM-OS1_HC_LF_A_0011_005	40.59	22.47	6.20	42.56	1.31	-82.66	28.78	7.760E-04
JPM-OS1_HC_LF_A_0012_005	41.09	22.31	6.20	17.87	1.15	-82.70	28.95	6.960E-04
JPM-OS1_HC_LF_A_0013_005	28.45	54.86	6.20	43.89	0.99	-82.76	28.46	2.310E-03
JPM-OS1_HC_LF_A_0014_005	26.16	28.99	13.38	43.25	1.13	-82.73	28.55	1.680E-03
JPM-OS1_HC_LF_A_0015_005	55.90	9.94	2.88	43.25	1.24	-82.72	29.00	1.480E-04
JPM-OS1_HC_LF_A_0016_005	55.69	35.12	13.33	43.25	1.24	-82.70	28.96	3.940E-04
JPM-OS1_HC_LF_A_0016_005a	56.11	34.97	13.33	40.27	1.24	-82.76	28.45	3.320E-04
JPM-OS1_HC_LF_A_0017_005	94.47	24.71	6.20	43.25	1.33	-82.71	28.97	1.110E-04
JPM-OS1_HC_LF_A_0018_005	55.01	35.37	2.88	43.25	1.24	-82.84	28.20	5.810E-04
JPM-OS1_HC_LF_A_0018_005a	57.43	34.52	2.88	40.27	1.24	-82.73	27.83	4.040E-04
JPM-OS1_HC_LF_A_0019_005	55.38	9.99	13.33	43.25	1.24	-82.67	28.90	1.620E-04
JPM-OS1_HC_LF_A_0020_005	93.95	7.69	6.20	43.25	1.33	-82.69	28.93	3.570E-05
JPM-OS1_HC_LF_B_0001_005	72.58	16.03	6.20	74.63	1.34	-82.82	27.93	7.950E-05
JPM-OS1_HC_LF_B_0001_006	75.18	15.71	6.20	74.63	1.34	-82.73	27.68	8.200E-05
JPM-OS1_HC_LF_B_0001_007	76.93	15.50	6.20	74.63	1.34	-82.62	27.44	8.350E-05
JPM-OS1_HC_LF_B_0001_008	76.50	15.55	6.20	74.63	1.34	-82.51	27.20	8.450E-05
JPM-OS1_HC_LF_B_0001_009	76.53	15.55	6.20	74.63	1.34	-82.35	26.96	8.950E-05
JPM-OS1_HC_LF_B_0001_010	78.77	15.29	6.20	74.63	1.34	-82.18	26.73	8.900E-05
JPM-OS1_HC_LF_B_0001_011	80.97	15.05	6.20	74.63	1.34	-82.02	26.50	8.300E-05
JPM-OS1_HC_LF_B_0001_012	83.67	14.76	6.20	74.63	1.34	-81.88	26.27	7.750E-05
JPM-OS1_HC_LF_B_0001_013	86.31	14.50	6.20	74.63	1.34	-81.75	26.03	7.500E-05
JPM-OS1_HC_LF_B_0001_014	87.24	14.41	6.20	74.63	1.34	-81.50	25.81	7.150E-05
JPM-OS1_HC_LF_B_0001_015	87.96	14.34	6.20	74.63	1.34	-81.24	25.61	6.650E-05
JPM-OS1_HC_LF_B_0002_005	72.64	16.02	6.20	38.09	1.17	-82.82	27.92	1.600E-04
JPM-OS1_HC_LF_B_0002_006	75.74	15.64	6.20	38.09	1.17	-82.71	27.63	1.650E-04
JPM-OS1_HC_LF_B_0002_007	76.78	15.52	6.20	38.09	1.17	-82.58	27.35	1.680E-04
JPM-OS1_HC_LF_B_0002_008	76.32	15.57	6.20	38.09	1.17	-82.44	27.09	1.790E-04
JPM-OS1_HC_LF_B_0002_009	77.55	15.43	6.20	38.09	1.17	-82.27	26.86	1.790E-04
JPM-OS1_HC_LF_B_0002_010	79.78	15.18	6.20	38.09	1.17	-82.11	26.63	1.680E-04
JPM-OS1_HC_LF_B_0002_011	82.28	14.91	6.20	38.09	1.17	-81.95	26.39	1.650E-04
JPM-OS1_HC_LF_B_0002_012	85.15	14.61	6.20	38.09	1.17	-81.81	26.13	1.520E-04
JPM-OS1_HC_LF_B_0002_013	86.90	14.44	6.20	38.09	1.17	-81.63	25.91	1.470E-04
JPM-OS1_HC_LF_B_0002_014	87.49	14.39	6.20	38.09	1.17	-81.41	25.74	1.400E-04
JPM-OS1_HC_LF_B_0003_005	29.25	53.99	6.20	72.80	1.24	-82.81	27.92	2.500E-03
JPM-OS1_HC_LF_B_0003_005a	29.63	53.59	6.20	72.80	1.24	-82.63	27.51	1.330E-03
JPM-OS1_HC_LF_B_0003_006	30.00	53.20	6.20	72.80	1.24	-82.44	27.09	2.800E-03
JPM-OS1_HC_LF_B_0003_006a	30.67	52.53	6.20	72.80	1.24	-82.22	26.60	1.320E-03
JPM-OS1_HC_LF_B_0003_007	31.35	51.86	6.20	72.80	1.24	-81.90	26.31	2.460E-03
JPM-OS1_HC_LF_B_0003_007a	31.75	51.48	6.20	72.80	1.24	-81.55	25.94	1.150E-03
JPM-OS1_HC_LF_B_0003_008	32.16	51.10	6.20	72.80	1.24	-81.20	25.57	2.150E-03
JPM-OS1_HC_LF_B_0004_005	29.78	13.53	6.20	1.78	1.23	-82.70	27.62	6.550E-04
JPM-OS1_HC_LF_B_0004_006	30.00	13.48	6.20	1.78	1.23	-82.47	27.14	6.830E-04
JPM-OS1_HC_LF_B_0004_007	30.38	13.38	6.20	1.78	1.23	-82.23	26.80	7.080E-04
JPM-OS1_HC_LF_B_0004_008	31.01	13.22	6.20	1.78	1.23	-82.00	26.47	6.600E-04
JPM-OS1_HC_LF_B_0004_009	31.85	13.02	6.20	1.78	1.23	-81.77	26.06	6.000E-04
JPM-OS1_HC_LF_B_0004_010	32.04	12.97	6.20	1.78	1.23	-81.53	25.83	5.720E-04
JPM-OS1_HC_LF_B_0004_011	32.12	12.95	6.20	1.78	1.23	-81.29	25.65	5.430E-04
JPM-OS1_HC_LF_B_0005_005	27.17	28.36	2.87	37.29	1.13	-82.65	27.51	1.930E-03
JPM-OS1_HC_LF_B_0005_006	27.21	28.34	2.87	37.29	1.13	-82.40	27.04	2.070E-03
JPM-OS1_HC_LF_B_0005_007	27.70	28.04	2.87	37.29	1.13	-82.10	26.61	1.950E-03
JPM-OS1_HC_LF_B_0005_008	28.31	27.69	2.87	37.29	1.13	-81.82	26.16	1.770E-03
JPM-OS1_HC_LF_B_0005_009	28.58	27.54	2.87	37.29	1.13	-81.47	25.79	1.640E-03
JPM-OS1_HC_LF_B_0005_010	28.70	27.47	2.87	37.29	1.13	-81.16	25.39	1.540E-03

DRAFT

Storm Name	DP (mb)	Rp (nmi)	Vf (m/s)	Heading (deg)	B	Landfall Long.	Landfall Lat.	Rate (1/year)
JPM-OS1_HC_LF_B_0006_005	29.18	13.69	6.20	72.80	1.24	-82.83	27.96	6.310E-04
JPM-OS1_HC_LF_B_0006_006	29.56	13.59	6.20	72.80	1.24	-82.75	27.74	6.490E-04
JPM-OS1_HC_LF_B_0006_007	29.93	13.49	6.20	72.80	1.24	-82.66	27.53	6.590E-04
JPM-OS1_HC_LF_B_0006_008	29.99	13.48	6.20	72.80	1.24	-82.57	27.32	6.660E-04
JPM-OS1_HC_LF_B_0006_009	30.00	13.48	6.20	72.80	1.24	-82.46	27.12	6.970E-04
JPM-OS1_HC_LF_B_0006_010	30.16	13.44	6.20	72.80	1.24	-82.31	26.92	7.100E-04
JPM-OS1_HC_LF_B_0006_011	30.53	13.34	6.20	72.80	1.24	-82.17	26.72	7.050E-04
JPM-OS1_HC_LF_B_0006_012	30.91	13.24	6.20	72.80	1.24	-82.03	26.53	6.610E-04
JPM-OS1_HC_LF_B_0006_013	31.32	13.14	6.20	72.80	1.24	-81.91	26.32	6.320E-04
JPM-OS1_HC_LF_B_0006_014	31.74	13.04	6.20	72.80	1.24	-81.80	26.12	6.040E-04
JPM-OS1_HC_LF_B_0006_015	32.01	12.98	6.20	72.80	1.24	-81.64	25.92	5.840E-04
JPM-OS1_HC_LF_B_0006_016	32.08	12.96	6.20	72.80	1.24	-81.42	25.75	5.570E-04
JPM-OS1_HC_LF_B_0007_005	42.34	21.92	6.20	76.22	1.15	-82.79	27.84	1.070E-03
JPM-OS1_HC_LF_B_0007_006	43.88	21.47	6.20	76.22	1.15	-82.65	27.50	1.110E-03
JPM-OS1_HC_LF_B_0007_007	43.81	21.49	6.20	76.22	1.15	-82.49	27.17	1.130E-03
JPM-OS1_HC_LF_B_0007_008	44.49	21.30	6.20	76.22	1.15	-82.26	26.84	1.190E-03
JPM-OS1_HC_LF_B_0007_009	45.98	20.90	6.20	76.22	1.15	-82.03	26.52	1.110E-03
JPM-OS1_HC_LF_B_0007_010	47.68	20.46	6.20	76.22	1.15	-81.84	26.19	1.020E-03
JPM-OS1_HC_LF_B_0007_011	48.84	20.18	6.20	76.22	1.15	-81.59	25.88	9.720E-04
JPM-OS1_HC_LF_B_0007_012	49.23	20.09	6.20	76.22	1.15	-81.22	25.58	8.990E-04
JPM-OS1_HC_LF_B_0008_005	31.09	52.11	6.20	1.78	1.23	-81.97	26.43	2.600E-03
JPM-OS1_HC_LF_B_0008_006	32.55	50.74	6.20	1.78	1.23	-81.07	25.04	1.880E-03
JPM-OS1_HC_LF_B_0009_005	72.95	15.99	6.20	0.02	1.33	-82.81	27.89	1.600E-04
JPM-OS1_HC_LF_B_0009_006	76.54	15.55	6.20	0.02	1.33	-82.52	27.21	1.680E-04
JPM-OS1_HC_LF_B_0009_007	78.13	15.36	6.20	0.02	1.33	-82.23	26.80	1.780E-04
JPM-OS1_HC_LF_B_0009_008	82.36	14.90	6.20	0.02	1.33	-81.95	26.38	1.650E-04
JPM-OS1_HC_LF_B_0009_009	86.82	14.45	6.20	0.02	1.33	-81.66	25.94	1.470E-04
JPM-OS1_HC_LF_B_0009_010	87.57	14.38	6.20	0.02	1.33	-81.38	25.72	1.390E-04
JPM-OS1_HC_LF_B_0010_005	29.30	13.66	6.20	38.05	0.99	-82.80	27.89	6.360E-04
JPM-OS1_HC_LF_B_0010_006	29.75	13.54	6.20	38.05	0.99	-82.71	27.63	6.540E-04
JPM-OS1_HC_LF_B_0010_007	29.99	13.48	6.20	38.05	0.99	-82.60	27.40	6.640E-04
JPM-OS1_HC_LF_B_0010_008	30.00	13.48	6.20	38.05	0.99	-82.49	27.16	6.720E-04
JPM-OS1_HC_LF_B_0010_009	30.08	13.45	6.20	38.05	0.99	-82.34	26.96	7.100E-04
JPM-OS1_HC_LF_B_0010_010	30.46	13.36	6.20	38.05	0.99	-82.20	26.76	7.070E-04
JPM-OS1_HC_LF_B_0010_011	30.84	13.26	6.20	38.05	0.99	-82.06	26.56	6.630E-04
JPM-OS1_HC_LF_B_0010_012	31.27	13.16	6.20	38.05	0.99	-81.93	26.35	6.500E-04
JPM-OS1_HC_LF_B_0010_013	31.72	13.05	6.20	38.05	0.99	-81.80	26.13	6.050E-04
JPM-OS1_HC_LF_B_0010_014	32.01	12.98	6.20	38.05	0.99	-81.66	25.93	5.840E-04
JPM-OS1_HC_LF_B_0010_015	32.07	12.97	6.20	38.05	0.99	-81.47	25.78	5.620E-04
JPM-OS1_HC_LF_B_0010_016	32.13	12.95	6.20	38.05	0.99	-81.28	25.64	5.400E-04
JPM-OS1_HC_LF_B_0011_005	42.65	21.83	6.20	36.48	1.31	-82.76	27.77	1.080E-03
JPM-OS1_HC_LF_B_0011_006	43.86	21.48	6.20	36.48	1.31	-82.59	27.38	1.120E-03
JPM-OS1_HC_LF_B_0011_007	43.78	21.50	6.20	36.48	1.31	-82.39	27.02	1.190E-03
JPM-OS1_HC_LF_B_0011_008	45.17	21.12	6.20	36.48	1.31	-82.16	26.70	1.180E-03
JPM-OS1_HC_LF_B_0011_009	46.79	20.69	6.20	36.48	1.31	-81.94	26.37	1.100E-03
JPM-OS1_HC_LF_B_0011_010	48.64	20.23	6.20	36.48	1.31	-81.74	26.01	1.000E-03
JPM-OS1_HC_LF_B_0011_011	48.99	20.14	6.20	36.48	1.31	-81.44	25.77	9.390E-04
JPM-OS1_HC_LF_B_0011_012	49.38	20.05	6.20	36.48	1.31	-81.18	25.49	9.130E-04
JPM-OS1_HC_LF_B_0012_005	42.18	21.97	6.20	0.05	1.15	-82.80	27.88	1.070E-03
JPM-OS1_HC_LF_B_0012_006	43.78	21.50	6.20	0.05	1.15	-82.40	27.04	1.190E-03
JPM-OS1_HC_LF_B_0012_007	46.14	20.86	6.20	0.05	1.15	-82.01	26.49	1.110E-03
JPM-OS1_HC_LF_B_0012_008	48.81	20.19	6.20	0.05	1.15	-81.62	25.90	9.770E-04
JPM-OS1_HC_LF_B_0012_009	49.20	20.09	6.20	0.05	1.15	-81.23	25.60	8.880E-04
JPM-OS1_HC_LF_B_0013_005	29.82	53.39	6.20	38.05	0.99	-82.69	27.60	2.590E-03
JPM-OS1_HC_LF_B_0013_006	30.50	52.69	6.20	38.05	0.99	-82.18	26.74	2.790E-03
JPM-OS1_HC_LF_B_0013_007	32.01	51.24	6.20	38.05	0.99	-81.64	25.92	2.300E-03
JPM-OS1_HC_LF_B_0013_008	32.48	50.81	6.20	38.05	0.99	-81.09	25.13	1.940E-03

DRAFT

Storm Name	DP (mb)	Rp (nmi)	Vf (m/s)	Heading (deg)	B	Landfall Long.	Landfall Lat.	Rate (1/year)
JPM-OS1_HC_LF_B_0014_005	27.02	28.45	13.38	37.29	1.13	-82.71	27.64	1.910E-03
JPM-OS1_HC_LF_B_0014_006	27.20	28.34	13.38	37.29	1.13	-82.47	27.14	1.980E-03
JPM-OS1_HC_LF_B_0014_007	27.57	28.12	13.38	37.29	1.13	-82.17	26.72	2.060E-03
JPM-OS1_HC_LF_B_0014_008	28.15	27.78	13.38	37.29	1.13	-81.89	26.28	1.800E-03
JPM-OS1_HC_LF_B_0014_009	28.56	27.55	13.38	37.29	1.13	-81.58	25.87	1.690E-03
JPM-OS1_HC_LF_B_0014_010	28.64	27.51	13.38	37.29	1.13	-81.19	25.55	1.610E-03
JPM-OS1_HC_LF_B_0015_005	56.18	9.91	2.88	37.29	1.24	-82.84	28.00	2.260E-04
JPM-OS1_HC_LF_B_0015_006	57.59	9.77	2.88	37.29	1.24	-82.78	27.81	2.310E-04
JPM-OS1_HC_LF_B_0015_007	58.96	9.64	2.88	37.29	1.24	-82.71	27.63	2.350E-04
JPM-OS1_HC_LF_B_0015_008	59.85	9.55	2.88	37.29	1.24	-82.63	27.45	2.380E-04
JPM-OS1_HC_LF_B_0015_009	59.70	9.57	2.88	37.29	1.24	-82.55	27.28	2.400E-04
JPM-OS1_HC_LF_B_0015_010	59.56	9.58	2.88	37.29	1.24	-82.46	27.12	2.490E-04
JPM-OS1_HC_LF_B_0015_011	59.62	9.58	2.88	37.29	1.24	-82.36	26.98	2.550E-04
JPM-OS1_HC_LF_B_0015_012	60.67	9.48	2.88	37.29	1.24	-82.25	26.84	2.550E-04
JPM-OS1_HC_LF_B_0015_013	61.71	9.39	2.88	37.29	1.24	-82.15	26.69	2.510E-04
JPM-OS1_HC_LF_B_0015_014	62.75	9.30	2.88	37.29	1.24	-82.05	26.55	2.380E-04
JPM-OS1_HC_LF_B_0015_015	63.97	9.19	2.88	37.29	1.24	-81.95	26.40	2.360E-04
JPM-OS1_HC_LF_B_0015_016	65.31	9.08	2.88	37.29	1.24	-81.87	26.24	2.200E-04
JPM-OS1_HC_LF_B_0015_017	66.65	8.98	2.88	37.29	1.24	-81.78	26.08	2.160E-04
JPM-OS1_HC_LF_B_0015_018	67.48	8.91	2.88	37.29	1.24	-81.67	25.94	2.110E-04
JPM-OS1_HC_LF_B_0015_019	67.74	8.89	2.88	37.29	1.24	-81.54	25.84	2.060E-04
JPM-OS1_HC_LF_B_0015_020	67.99	8.87	2.88	37.29	1.24	-81.40	25.74	2.000E-04
JPM-OS1_HC_LF_B_0016_005	56.53	34.82	13.33	37.29	1.24	-82.82	27.95	4.010E-04
JPM-OS1_HC_LF_B_0016_005a	58.13	34.27	13.33	37.29	1.24	-82.70	27.64	4.120E-04
JPM-OS1_HC_LF_B_0016_006	59.73	33.72	13.33	37.29	1.24	-82.57	27.32	4.230E-04
JPM-OS1_HC_LF_B_0016_006a	60.35	33.52	13.33	37.29	1.24	-82.40	27.06	4.360E-04
JPM-OS1_HC_LF_B_0016_007	60.98	33.32	13.33	37.29	1.24	-82.22	26.79	4.490E-04
JPM-OS1_HC_LF_B_0016_007a	63.03	32.70	13.33	37.29	1.24	-82.05	26.53	4.190E-04
JPM-OS1_HC_LF_B_0016_008	65.08	32.09	13.33	37.29	1.24	-81.88	26.27	3.900E-04
JPM-OS1_HC_LF_B_0016_008a	66.45	31.71	13.33	37.29	1.24	-81.69	26.04	3.740E-04
JPM-OS1_HC_LF_B_0016_009	67.82	31.33	13.33	37.29	1.24	-81.49	25.80	3.580E-04
JPM-OS1_HC_LF_B_0016_009a	68.78	31.08	13.33	37.29	1.24	-81.31	25.55	3.430E-04
JPM-OS1_HC_LF_B_0016_010	69.73	30.83	13.33	37.29	1.24	-81.13	25.30	4.930E-04
JPM-OS1_HC_LF_B_0017_005	94.16	24.76	6.20	37.29	1.33	-82.83	27.97	8.460E-05
JPM-OS1_HC_LF_B_0017_006	99.97	23.91	6.20	37.29	1.33	-82.65	27.51	8.850E-05
JPM-OS1_HC_LF_B_0017_007	99.02	24.04	6.20	37.29	1.33	-82.44	27.10	9.510E-05
JPM-OS1_HC_LF_B_0017_008	101.60	23.69	6.20	37.29	1.33	-82.19	26.74	9.470E-05
JPM-OS1_HC_LF_B_0017_009	105.45	23.18	6.20	37.29	1.33	-81.94	26.37	8.780E-05
JPM-OS1_HC_LF_B_0017_010	109.11	22.73	6.20	37.29	1.33	-81.71	25.98	7.940E-05
JPM-OS1_HC_LF_B_0017_011	109.86	22.64	6.20	37.29	1.33	-81.38	25.72	7.410E-05
JPM-OS1_HC_LF_B_0018_005	59.85	33.68	2.88	37.29	1.24	-82.63	27.46	4.200E-04
JPM-OS1_HC_LF_B_0018_005a	60.00	33.64	2.88	37.29	1.24	-82.47	27.18	4.350E-04
JPM-OS1_HC_LF_B_0018_006	60.15	33.59	2.88	37.29	1.24	-82.31	26.91	4.500E-04
JPM-OS1_HC_LF_B_0018_006a	62.08	32.99	2.88	37.29	1.24	-82.13	26.65	4.330E-04
JPM-OS1_HC_LF_B_0018_007	64.01	32.40	2.88	37.29	1.24	-81.95	26.39	4.160E-04
JPM-OS1_HC_LF_B_0018_007a	65.82	31.89	2.88	37.29	1.24	-81.78	26.14	3.920E-04
JPM-OS1_HC_LF_B_0018_008	67.62	31.38	2.88	37.29	1.24	-81.60	25.89	3.680E-04
JPM-OS1_HC_LF_B_0018_008a	68.20	31.23	2.88	37.29	1.24	-81.39	25.68	3.560E-04
JPM-OS1_HC_LF_B_0018_009	68.78	31.07	2.88	37.29	1.24	-81.17	25.47	5.170E-04
JPM-OS1_HC_LF_B_0019_005	57.04	9.82	13.33	37.29	1.24	-82.80	27.88	2.290E-04
JPM-OS1_HC_LF_B_0019_006	58.44	9.69	13.33	37.29	1.24	-82.73	27.69	2.340E-04
JPM-OS1_HC_LF_B_0019_007	59.74	9.56	13.33	37.29	1.24	-82.66	27.52	2.370E-04
JPM-OS1_HC_LF_B_0019_008	59.76	9.56	13.33	37.29	1.24	-82.58	27.35	2.390E-04
JPM-OS1_HC_LF_B_0019_009	59.61	9.58	13.33	37.29	1.24	-82.50	27.18	2.410E-04
JPM-OS1_HC_LF_B_0019_010	59.49	9.59	13.33	37.29	1.24	-82.40	27.04	2.550E-04
JPM-OS1_HC_LF_B_0019_011	60.26	9.52	13.33	37.29	1.24	-82.29	26.89	2.550E-04
JPM-OS1_HC_LF_B_0019_012	61.31	9.42	13.33	37.29	1.24	-82.19	26.75	2.540E-04

DRAFT

Storm Name	DP (mb)	Rp (nmi)	Vf (m/s)	Heading (deg)	B	Landfall Long.	Landfall Lat.	Rate (1/year)
JPM-OS1_HC_LF_B_0019_013	62.35	9.33	13.33	37.29	1.24	-82.09	26.61	2.400E-04
JPM-OS1_HC_LF_B_0019_014	63.45	9.24	13.33	37.29	1.24	-81.99	26.46	2.370E-04
JPM-OS1_HC_LF_B_0019_015	64.79	9.12	13.33	37.29	1.24	-81.90	26.30	2.220E-04
JPM-OS1_HC_LF_B_0019_016	66.13	9.02	13.33	37.29	1.24	-81.81	26.14	2.180E-04
JPM-OS1_HC_LF_B_0019_017	67.37	8.92	13.33	37.29	1.24	-81.72	25.99	2.130E-04
JPM-OS1_HC_LF_B_0019_018	67.64	8.90	13.33	37.29	1.24	-81.59	25.88	2.080E-04
JPM-OS1_HC_LF_B_0019_019	67.89	8.88	13.33	37.29	1.24	-81.46	25.78	2.020E-04
JPM-OS1_HC_LF_B_0019_020	68.15	8.86	13.33	37.29	1.24	-81.32	25.67	1.960E-04
JPM-OS1_HC_LF_B_001a_005	72.59	16.04	2.88	74.63	1.34	-82.82	27.93	3.990E-05
JPM-OS1_HC_LF_B_001a_006	75.18	15.71	2.88	74.63	1.34	-82.73	27.68	4.110E-05
JPM-OS1_HC_LF_B_001a_007	76.94	15.50	2.88	74.63	1.34	-82.62	27.44	4.170E-05
JPM-OS1_HC_LF_B_001a_008	76.51	15.55	2.88	74.63	1.34	-82.51	27.20	4.220E-05
JPM-OS1_HC_LF_B_001a_009	76.54	15.55	2.88	74.63	1.34	-82.35	26.96	4.470E-05
JPM-OS1_HC_LF_B_001a_010	78.78	15.29	2.88	74.63	1.34	-82.18	26.73	4.440E-05
JPM-OS1_HC_LF_B_001a_011	80.97	15.05	2.88	74.63	1.34	-82.02	26.50	4.150E-05
JPM-OS1_HC_LF_B_001a_012	83.68	14.77	2.88	74.63	1.34	-81.88	26.27	3.870E-05
JPM-OS1_HC_LF_B_001a_013	86.32	14.50	2.88	74.63	1.34	-81.75	26.03	3.760E-05
JPM-OS1_HC_LF_B_001a_014	87.25	14.41	2.88	74.63	1.34	-81.50	25.81	3.570E-05
JPM-OS1_HC_LF_B_001a_015	87.97	14.34	2.88	74.63	1.34	-81.24	25.61	3.340E-05
JPM-OS1_HC_LF_B_001b_005	72.50	16.05	13.35	74.63	1.34	-82.82	27.94	3.980E-05
JPM-OS1_HC_LF_B_001b_006	75.10	15.72	13.35	74.63	1.34	-82.73	27.69	4.100E-05
JPM-OS1_HC_LF_B_001b_007	76.95	15.50	13.35	74.63	1.34	-82.62	27.45	4.170E-05
JPM-OS1_HC_LF_B_001b_008	76.52	15.55	13.35	74.63	1.34	-82.51	27.20	4.210E-05
JPM-OS1_HC_LF_B_001b_009	76.46	15.56	13.35	74.63	1.34	-82.35	26.97	4.470E-05
JPM-OS1_HC_LF_B_001b_010	78.71	15.30	13.35	74.63	1.34	-82.19	26.74	4.450E-05
JPM-OS1_HC_LF_B_001b_011	80.90	15.06	13.35	74.63	1.34	-82.02	26.51	4.160E-05
JPM-OS1_HC_LF_B_001b_012	83.59	14.78	13.35	74.63	1.34	-81.88	26.27	3.870E-05
JPM-OS1_HC_LF_B_001b_013	86.23	14.51	13.35	74.63	1.34	-81.75	26.03	3.770E-05
JPM-OS1_HC_LF_B_001b_014	87.23	14.42	13.35	74.63	1.34	-81.51	25.82	3.580E-05
JPM-OS1_HC_LF_B_001b_015	87.94	14.35	13.35	74.63	1.34	-81.24	25.61	3.350E-05
JPM-OS1_HC_LF_B_0020_005	94.85	7.65	6.20	37.29	1.33	-82.81	27.92	5.280E-05
JPM-OS1_HC_LF_B_0020_006	96.77	7.56	6.20	37.29	1.33	-82.76	27.77	5.370E-05
JPM-OS1_HC_LF_B_0020_007	98.55	7.48	6.20	37.29	1.33	-82.71	27.63	5.460E-05
JPM-OS1_HC_LF_B_0020_008	100.10	7.41	6.20	37.29	1.33	-82.65	27.50	5.490E-05
JPM-OS1_HC_LF_B_0020_009	99.73	7.43	6.20	37.29	1.33	-82.58	27.36	5.520E-05
JPM-OS1_HC_LF_B_0020_010	99.37	7.44	6.20	37.29	1.33	-82.52	27.23	5.550E-05
JPM-OS1_HC_LF_B_0020_011	99.05	7.46	6.20	37.29	1.33	-82.45	27.11	5.850E-05
JPM-OS1_HC_LF_B_0020_012	98.79	7.47	6.20	37.29	1.33	-82.37	27.00	5.910E-05
JPM-OS1_HC_LF_B_0020_013	100.03	7.41	6.20	37.29	1.33	-82.29	26.89	5.910E-05
JPM-OS1_HC_LF_B_0020_014	101.23	7.36	6.20	37.29	1.33	-82.21	26.77	5.880E-05
JPM-OS1_HC_LF_B_0020_015	102.37	7.32	6.20	37.29	1.33	-82.13	26.66	5.640E-05
JPM-OS1_HC_LF_B_0020_016	103.46	7.27	6.20	37.29	1.33	-82.05	26.55	5.520E-05
JPM-OS1_HC_LF_B_0020_017	104.69	7.22	6.20	37.29	1.33	-81.98	26.44	5.490E-05
JPM-OS1_HC_LF_B_0020_018	106.06	7.17	6.20	37.29	1.33	-81.91	26.31	5.220E-05
JPM-OS1_HC_LF_B_0020_019	107.32	7.12	6.20	37.29	1.33	-81.84	26.19	5.070E-05
JPM-OS1_HC_LF_B_0020_020	108.47	7.07	6.20	37.29	1.33	-81.77	26.07	5.010E-05
JPM-OS1_HC_LF_B_0020_021	109.18	7.05	6.20	37.29	1.33	-81.69	25.96	4.890E-05
JPM-OS1_HC_LF_B_0020_022	109.41	7.04	6.20	37.29	1.33	-81.58	25.88	4.830E-05
JPM-OS1_HC_LF_B_0020_023	109.64	7.03	6.20	37.29	1.33	-81.48	25.80	4.680E-05
JPM-OS1_HC_LF_B_0020_024	109.86	7.02	6.20	37.29	1.33	-81.37	25.71	4.590E-05
JPM-OS1_HC_LF_B_017a_005	94.32	24.73	2.88	37.29	1.34	-82.83	27.96	1.410E-05
JPM-OS1_HC_LF_B_017a_006	100.09	23.89	2.88	37.29	1.34	-82.65	27.50	1.480E-05
JPM-OS1_HC_LF_B_017a_007	98.99	24.05	2.88	37.29	1.34	-82.44	27.09	1.590E-05
JPM-OS1_HC_LF_B_017a_008	101.69	23.68	2.88	37.29	1.34	-82.18	26.73	1.580E-05
JPM-OS1_HC_LF_B_017a_009	105.56	23.17	2.88	37.29	1.34	-81.93	26.36	1.460E-05
JPM-OS1_HC_LF_B_017a_010	109.13	22.73	2.88	37.29	1.34	-81.70	25.97	1.320E-05
JPM-OS1_HC_LF_B_017a_011	109.88	22.64	2.88	37.29	1.34	-81.37	25.71	1.230E-05

DRAFT

Storm Name	DP (mb)	Rp (nmi)	Vf (m/s)	Heading (deg)	B	Landfall Long.	Landfall Lat.	Rate (1/year)
JPM-OS1_HC_LF_B_017b_005	97.49	24.26	13.35	37.29	1.34	-82.74	27.71	1.450E-05
JPM-OS1_HC_LF_B_017b_006	99.51	23.98	13.35	37.29	1.34	-82.55	27.28	1.490E-05
JPM-OS1_HC_LF_B_017b_007	99.83	23.93	13.35	37.29	1.34	-82.30	26.90	1.590E-05
JPM-OS1_HC_LF_B_017b_008	103.52	23.43	13.35	37.29	1.34	-82.05	26.55	1.480E-05
JPM-OS1_HC_LF_B_017b_009	107.65	22.91	13.35	37.29	1.34	-81.82	26.16	1.360E-05
JPM-OS1_HC_LF_B_017b_010	109.53	22.68	13.35	37.29	1.34	-81.53	25.83	1.280E-05
JPM-OS1_HC_LF_B_017b_011	110.27	22.59	13.35	37.29	1.34	-81.20	25.56	1.220E-05
JPM-OS1_Inland_0017_005	91.61	25.16	6.20	-27.49	1.33	-81.88	26.61	4.200E-05
JPM-OS1_Inland_0017_006	93.89	24.80	6.20	-29.09	1.33	-81.51	26.85	9.670E-05
JPM-OS1_Inland_0017_007	96.41	24.42	6.20	-32.24	1.33	-81.14	27.08	1.670E-04
JPM-OS1_Inland_0017_008	96.91	24.35	6.20	-34.92	1.33	-80.76	27.32	1.880E-04
JPM-OS1_Inland_0017_009	97.94	24.20	6.20	-36.61	1.33	-80.39	27.56	1.230E-04
JPM-OS1_Offsh_0001_001	68.86	16.53	6.20	-5.43	1.32	-83.38	25.37	4.520E-04
JPM-OS1_Offsh_0001_002	68.86	16.53	6.20	-6.91	1.32	-83.07	25.64	3.340E-04
JPM-OS1_Offsh_0001_003	68.86	16.53	6.20	-8.72	1.32	-82.75	25.92	2.440E-04
JPM-OS1_Offsh_0001_004	68.86	16.53	6.20	-11.45	1.32	-82.44	26.19	1.810E-04
JPM-OS1_Offsh_0003_003	20.74	65.89	6.20	-3.72	1.26	-84.49	24.40	5.330E-03
JPM-OS1_Offsh_0003_004	20.74	65.89	6.20	-7.02	1.26	-83.31	25.43	3.510E-03
JPM-OS1_Offsh_0007_001	34.56	24.66	6.20	-2.25	1.13	-83.92	24.91	2.710E-03
JPM-OS1_Offsh_0007_002	34.56	24.66	6.20	-4.07	1.13	-83.44	25.32	1.940E-03
JPM-OS1_Offsh_0007_003	34.56	24.66	6.20	-6.59	1.13	-82.96	25.74	1.220E-03
JPM-OS1_Offsh_0007_004	34.56	24.66	6.20	-10.28	1.13	-82.47	26.16	7.660E-04
JPM-OS1_Offsh_0008_002	20.74	65.89	6.20	-76.81	1.25	-84.46	24.43	5.390E-03
JPM-OS1_Offsh_0008_003	20.74	65.89	6.20	-69.67	1.25	-83.37	25.38	3.700E-03
JPM-OS1_Offsh_0008_004	20.74	65.89	6.20	-39.11	1.25	-82.28	26.33	1.270E-03
JPM-OS1_Offsh_0009_001	68.86	16.53	6.20	-69.82	1.31	-83.30	25.44	4.200E-04
JPM-OS1_Offsh_0009_002	68.86	16.53	6.20	-64.12	1.31	-83.02	25.69	3.170E-04
JPM-OS1_Offsh_0009_003	68.86	16.53	6.20	-56.10	1.31	-82.73	25.93	2.400E-04
JPM-OS1_Offsh_0009_004	68.86	16.53	6.20	-46.04	1.31	-82.45	26.17	1.840E-04
JPM-OS1_Offsh_0009_005	68.86	16.53	6.20	-35.70	1.31	-82.18	26.42	1.380E-04
JPM-OS1_Offsh_0011_001	34.56	24.66	6.20	-39.11	1.29	-83.35	25.40	1.800E-03
JPM-OS1_Offsh_0011_002	34.56	24.66	6.20	-37.41	1.29	-83.02	25.68	1.310E-03
JPM-OS1_Offsh_0011_003	34.56	24.66	6.20	-34.06	1.29	-82.69	25.97	9.430E-04
JPM-OS1_Offsh_0011_004	34.56	24.66	6.20	-29.73	1.29	-82.36	26.25	6.870E-04
JPM-OS1_Offsh_0013_002	20.74	65.89	6.20	-38.68	0.72	-84.49	24.40	5.330E-03
JPM-OS1_Offsh_0013_003	20.74	65.89	6.20	-38.21	0.72	-83.62	25.16	4.510E-03
JPM-OS1_Offsh_0013_004	20.74	65.89	6.20	-33.48	0.72	-82.74	25.93	1.990E-03
JPM-OS1_Offsh_0014_001	18.01	35.99	13.38	-39.22	1.05	-83.82	24.99	3.820E-03
JPM-OS1_Offsh_0014_002	18.01	35.99	13.38	-38.30	1.05	-83.34	25.41	2.610E-03
JPM-OS1_Offsh_0014_003	18.01	35.99	13.38	-35.35	1.05	-82.86	25.82	1.620E-03
JPM-OS1_Offsh_0014_004	18.01	35.99	13.38	-29.42	1.05	-82.38	26.24	1.020E-03
JPM-OS1_Offsh_0016_001	50.87	37.01	13.33	-39.41	1.22	-84.15	24.71	2.660E-03
JPM-OS1_Offsh_0016_002	50.87	37.01	13.33	-39.02	1.22	-83.65	25.13	2.130E-03
JPM-OS1_Offsh_0016_003	50.87	37.01	13.33	-37.55	1.22	-83.16	25.56	1.410E-03
JPM-OS1_Offsh_0016_004	50.87	37.01	13.33	-33.13	1.22	-82.67	25.99	8.640E-04
JPM-OS1_Offsh_0016_005	50.87	37.01	13.33	-29.56	1.22	-82.17	26.42	5.260E-04
JPM-OS1_Offsh_0017_001	94.36	24.72	6.20	-38.76	1.32	-83.51	25.26	2.660E-04
JPM-OS1_Offsh_0017_002	94.36	24.72	6.20	-37.64	1.32	-83.18	25.55	1.970E-04
JPM-OS1_Offsh_0017_003	94.36	24.72	6.20	-35.24	1.32	-82.85	25.83	1.410E-04
JPM-OS1_Offsh_0017_004	94.36	24.72	6.20	-30.98	1.32	-82.52	26.12	1.030E-04
JPM-OS1_Offsh_0017_005	94.36	24.72	6.20	-29.46	1.32	-82.19	26.41	7.360E-05
JPM-OS1_Offsh_0018_001	50.87	37.01	2.88	-39.16	1.22	-83.76	25.04	2.400E-03
JPM-OS1_Offsh_0018_002	50.87	37.01	2.88	-38.06	1.22	-83.27	25.46	1.570E-03
JPM-OS1_Offsh_0018_003	50.87	37.01	2.88	-34.50	1.22	-82.78	25.89	9.600E-04
JPM-OS1_Offsh_0018_004	50.87	37.01	2.88	-29.16	1.22	-82.28	26.32	5.940E-04
JPM-OS1_TS_LF_A_0001_005	20.38	57.58	6.20	47.00	1.07	-82.70	28.65	3.750E-03
JPM-OS1_TS_LF_A_0002_005	16.33	38.09	6.20	105.40	0.72	-82.65	28.82	2.580E-03

DRAFT

Storm Name	DP (mb)	Rp (nmi)	Vf (m/s)	Heading (deg)	B	Landfall Long.	Landfall Lat.	Rate (1/year)
JPM-OS1_TS_LF_A_0003_005	14.55	18.11	6.20	47.00	1.02	-82.71	28.97	1.420E-03
JPM-OS1_TS_LF_A_0004_005	20.36	19.50	6.20	47.00	1.07	-82.66	28.78	1.270E-03
JPM-OS1_TS_LF_A_0007_005	16.19	38.28	1.99	47.00	1.04	-82.71	28.61	2.140E-03
JPM-OS1_TS_LF_A_0008_005	16.41	37.98	6.20	90.83	1.46	-82.77	28.41	2.390E-03
JPM-OS1_TS_LF_A_0009_005	14.58	91.54	6.20	47.00	1.02	-82.66	28.79	6.500E-03
JPM-OS1_TS_LF_A_0010_005	16.18	38.30	19.29	47.00	1.04	-82.70	28.66	2.320E-03
JPM-OS1_TS_LF_B_0001_005	20.47	57.42	6.20	47.00	1.07	-82.74	27.71	3.240E-03
JPM-OS1_TS_LF_B_0001_006	20.51	57.36	6.20	47.00	1.07	-82.24	26.82	3.100E-03
JPM-OS1_TS_LF_B_0001_007	20.51	57.36	6.20	47.00	1.07	-81.70	25.97	3.980E-03
JPM-OS1_TS_LF_B_0001_008	20.50	57.38	6.20	47.00	1.07	-81.10	25.16	3.140E-03
JPM-OS1_TS_LF_B_0002_005	16.50	37.87	6.20	105.40	0.72	-82.78	27.82	2.200E-03
JPM-OS1_TS_LF_B_0002_006	16.57	37.78	6.20	105.40	0.72	-82.42	27.07	2.080E-03
JPM-OS1_TS_LF_B_0002_007	16.57	37.77	6.20	105.40	0.72	-81.89	26.28	2.850E-03
JPM-OS1_TS_LF_B_0002_008	16.56	37.79	6.20	105.40	0.72	-81.16	25.42	2.320E-03
JPM-OS1_TS_LF_B_0003_005	14.66	18.03	6.20	47.00	1.02	-82.83	27.97	1.140E-03
JPM-OS1_TS_LF_B_0003_006	14.69	18.01	6.20	47.00	1.02	-82.72	27.65	1.120E-03
JPM-OS1_TS_LF_B_0003_007	14.71	18.00	6.20	47.00	1.02	-82.58	27.36	1.160E-03
JPM-OS1_TS_LF_B_0003_008	14.72	17.99	6.20	47.00	1.02	-82.43	27.08	1.030E-03
JPM-OS1_TS_LF_B_0003_009	14.72	17.99	6.20	47.00	1.02	-82.24	26.82	1.060E-03
JPM-OS1_TS_LF_B_0003_010	14.72	17.99	6.20	47.00	1.02	-82.06	26.56	1.310E-03
JPM-OS1_TS_LF_B_0003_011	14.72	17.99	6.20	47.00	1.02	-81.89	26.29	1.420E-03
JPM-OS1_TS_LF_B_0003_012	14.72	17.99	6.20	47.00	1.02	-81.74	26.01	1.380E-03
JPM-OS1_TS_LF_B_0003_013	14.72	17.99	6.20	47.00	1.02	-81.49	25.81	1.300E-03
JPM-OS1_TS_LF_B_0003_014	14.71	18.00	6.20	47.00	1.02	-81.24	25.61	1.220E-03
JPM-OS1_TS_LF_B_0004_005	20.47	19.44	6.20	47.00	1.07	-82.77	27.79	1.090E-03
JPM-OS1_TS_LF_B_0004_006	20.49	19.43	6.20	47.00	1.07	-82.63	27.46	1.130E-03
JPM-OS1_TS_LF_B_0004_007	20.51	19.42	6.20	47.00	1.07	-82.48	27.15	1.140E-03
JPM-OS1_TS_LF_B_0004_008	20.51	19.42	6.20	47.00	1.07	-82.28	26.87	1.050E-03
JPM-OS1_TS_LF_B_0004_009	20.51	19.42	6.20	47.00	1.07	-82.08	26.59	1.300E-03
JPM-OS1_TS_LF_B_0004_010	20.51	19.42	6.20	47.00	1.07	-81.90	26.30	1.410E-03
JPM-OS1_TS_LF_B_0004_011	20.51	19.42	6.20	47.00	1.07	-81.73	26.00	1.360E-03
JPM-OS1_TS_LF_B_0004_012	20.51	19.42	6.20	47.00	1.07	-81.46	25.78	1.280E-03
JPM-OS1_TS_LF_B_0004_013	20.51	19.42	6.20	47.00	1.07	-81.20	25.56	1.180E-03
JPM-OS1_TS_LF_B_0005_005	16.57	37.77	6.20	-11.40	1.36	-81.78	26.09	2.800E-03
JPM-OS1_TS_LF_B_0006_005	16.52	37.84	6.20	3.17	0.61	-82.72	27.67	2.240E-03
JPM-OS1_TS_LF_B_0006_006	16.57	37.78	6.20	3.17	0.61	-82.09	26.61	2.640E-03
JPM-OS1_TS_LF_B_0006_007	16.57	37.78	6.20	3.17	0.61	-81.46	25.78	2.590E-03
JPM-OS1_TS_LF_B_0007_005	16.33	38.09	1.99	47.00	1.04	-82.73	27.69	2.000E-03
JPM-OS1_TS_LF_B_0007_006	16.38	38.03	1.99	47.00	1.04	-82.43	27.08	1.860E-03
JPM-OS1_TS_LF_B_0007_007	16.38	38.03	1.99	47.00	1.04	-82.04	26.53	2.360E-03
JPM-OS1_TS_LF_B_0007_008	16.38	38.02	1.99	47.00	1.04	-81.69	25.96	2.440E-03
JPM-OS1_TS_LF_B_0007_009	16.37	38.03	1.99	47.00	1.04	-81.18	25.52	2.120E-03
JPM-OS1_TS_LF_B_0008_005	16.55	37.80	6.20	90.83	1.46	-82.60	27.40	2.310E-03
JPM-OS1_TS_LF_B_0008_006	16.57	37.77	6.20	90.83	1.46	-82.20	26.76	2.310E-03
JPM-OS1_TS_LF_B_0008_007	16.57	37.77	6.20	90.83	1.46	-81.80	26.12	2.810E-03
JPM-OS1_TS_LF_B_0008_008	16.56	37.79	6.20	90.83	1.46	-81.17	25.47	2.360E-03
JPM-OS1_TS_LF_B_0009_005	14.68	91.18	6.20	47.00	1.02	-82.77	27.80	5.550E-03
JPM-OS1_TS_LF_B_0009_006	14.72	91.03	6.20	47.00	1.02	-81.95	26.40	6.610E-03
JPM-OS1_TS_LF_B_0009_007	14.70	91.11	6.20	47.00	1.02	-81.07	25.07	5.260E-03
JPM-OS1_TS_LF_B_0010_005	16.32	38.10	19.29	47.00	1.04	-82.74	27.72	1.990E-03
JPM-OS1_TS_LF_B_0010_006	16.38	38.03	19.29	47.00	1.04	-82.44	27.10	1.860E-03
JPM-OS1_TS_LF_B_0010_007	16.38	38.03	19.29	47.00	1.04	-82.06	26.56	2.360E-03
JPM-OS1_TS_LF_B_0010_008	16.38	38.02	19.29	47.00	1.04	-81.71	25.98	2.460E-03
JPM-OS1_TS_LF_B_0010_009	16.37	38.03	19.29	47.00	1.04	-81.19	25.55	2.140E-03

DRAFT

Table F-2: Random Starting Times for JPM-OS1b Storms

mm/dd/yyyy hh:mm	Storm Name		mm/dd/yyyy hh:mm	Storm Name
08/01/2010 00:00	JPM-OS1_HC_LF_B_0010_016		09/15/2010 06:00	JPM-OS1_HC_LF_B_001a_007
08/01/2010 10:00	JPM-OS1_Offsh_0017_001		09/15/2010 11:00	JPM-OS1_HC_LF_B_0005_006
08/01/2010 12:00	JPM-OS1_HC_LF_B_0010_005		09/15/2010 19:00	JPM-OS1_TS_LF_B_0008_007
08/01/2010 18:00	JPM-OS1_HC_LF_B_0009_008		09/16/2010 04:00	JPM-OS1_HC_LF_B_001b_014
08/01/2010 19:00	JPM-OS1_HC_LF_A_0003_005a		09/16/2010 05:00	JPM-OS1_HC_LF_A_0011_005
08/02/2010 00:00	JPM-OS1_HC_LF_B_0009_006		09/16/2010 10:00	JPM-OS1_TS_LF_B_0006_005
08/02/2010 01:00	JPM-OS1_Offsh_0013_004		09/16/2010 12:00	JPM-OS1_HC_LF_A_0009_005
08/02/2010 05:00	JPM-OS1_HC_LF_B_0003_005a		09/16/2010 18:00	JPM-OS1_Exit_0009_005
08/02/2010 06:00	JPM-OS1_HC_LF_B_0003_006a		09/16/2010 21:00	JPM-OS1_HC_LF_B_001a_012
08/02/2010 07:00	JPM-OS1_HC_LF_B_0010_006		09/17/2010 13:00	JPM-OS1_HC_LF_B_0005_007
08/02/2010 10:00	JPM-OS1_TS_LF_B_0004_009		09/17/2010 22:00	JPM-OS1_Offsh_0016_003
08/02/2010 13:00	JPM-OS1_Exit_0011_007		09/17/2010 23:00	JPM-OS1_Offsh_0007_002
08/02/2010 18:00	JPM-OS1_HC_LF_B_0003_007a		09/18/2010 18:00	JPM-OS1_HC_LF_B_0006_009
08/03/2010 00:00	JPM-OS1_Exit_0012_008		09/19/2010 10:00	JPM-OS1_TS_LF_B_0007_007
08/03/2010 02:00	JPM-OS1_TS_LF_B_0008_005		09/19/2010 11:00	JPM-OS1_HC_LF_B_0017_009
08/03/2010 05:00	JPM-OS1_Inland_0017_008		09/19/2010 13:00	JPM-OS1_HC_LF_B_001a_005
08/03/2010 11:00	JPM-OS1_HC_LF_A_0016_005a		09/19/2010 16:00	JPM-OS1_Inland_0017_006
08/03/2010 12:00	JPM-OS1_HC_LF_A_0004_005		09/19/2010 19:00	JPM-OS1_Offsh_0009_003
08/03/2010 14:00	JPM-OS1_HC_LF_B_001b_005		09/19/2010 23:00	JPM-OS1_HC_LF_B_001b_013
08/03/2010 15:00	JPM-OS1_HC_LF_B_0015_009		09/20/2010 12:00	JPM-OS1_HC_LF_B_0004_011
08/03/2010 17:00	JPM-OS1_HC_LF_B_0001_011		09/20/2010 17:00	JPM-OS1_HC_LF_B_0013_007
08/03/2010 18:00	JPM-OS1_Exit_0019_009		09/21/2010 02:00	JPM-OS1_HC_LF_B_017a_008
08/03/2010 21:00	JPM-OS1_TS_LF_B_0009_006		09/21/2010 18:00	JPM-OS1_HC_LF_B_0006_011
08/04/2010 00:00	JPM-OS1_Offsh_0016_002		09/21/2010 19:00	JPM-OS1_HC_LF_B_0007_012
08/04/2010 10:00	JPM-OS1_HC_LF_B_0009_009		09/22/2010 00:00	JPM-OS1_HC_LF_B_001b_008
08/04/2010 13:00	JPM-OS1_Offsh_0018_002		09/22/2010 05:00	JPM-OS1_Exit_0001_005
08/04/2010 18:00	JPM-OS1_HC_LF_B_0007_010		09/22/2010 11:00	JPM-OS1_Exit_0018_006
08/04/2010 23:00	JPM-OS1_Exit_0009_006		09/22/2010 12:00	JPM-OS1_HC_LF_B_0008_005
08/05/2010 07:00	JPM-OS1_TS_LF_B_0003_013		09/22/2010 13:00	JPM-OS1_HC_LF_B_0010_012
08/05/2010 13:00	JPM-OS1_Offsh_0009_005		09/23/2010 01:00	JPM-OS1_TS_LF_B_0002_006
08/05/2010 18:00	JPM-OS1_HC_LF_B_0020_016		09/23/2010 02:00	JPM-OS1_HC_LF_B_0015_007
08/05/2010 19:00	JPM-OS1_HC_LF_B_0019_010		09/23/2010 03:00	JPM-OS1_HC_LF_B_0016_006a
08/05/2010 22:00	JPM-OS1_Offsh_0016_001		09/23/2010 06:00	JPM-OS1_HC_LF_A_0019_005
08/06/2010 03:00	JPM-OS1_Offsh_0007_001		09/23/2010 07:00	JPM-OS1_Offsh_0011_003
08/06/2010 09:00	JPM-OS1_HC_LF_B_0015_015		09/23/2010 16:00	JPM-OS1_HC_LF_B_0013_006
08/06/2010 10:00	JPM-OS1_HC_LF_A_0017_005		09/23/2010 18:00	JPM-OS1_TS_LF_B_0002_005
08/07/2010 01:00	JPM-OS1_TS_LF_B_0003_008		09/23/2010 20:00	JPM-OS1_HC_LF_B_001a_015
08/07/2010 17:00	JPM-OS1_HC_LF_B_0001_013		09/24/2010 00:00	JPM-OS1_Offsh_0003_003
08/07/2010 20:00	JPM-OS1_HC_LF_B_0020_018		09/24/2010 02:00	JPM-OS1_HC_LF_B_017b_008
08/07/2010 22:00	JPM-OS1_HC_LF_A_0006_005		09/24/2010 08:00	JPM-OS1_HC_LF_B_0020_019
08/08/2010 01:00	JPM-OS1_Exit_0019_008		09/24/2010 11:00	JPM-OS1_HC_LF_B_0019_008
08/08/2010 02:00	JPM-OS1_TS_LF_B_0004_007		09/25/2010 10:00	JPM-OS1_HC_LF_A_0002_005
08/08/2010 05:00	JPM-OS1_HC_LF_B_0014_006		09/25/2010 12:00	JPM-OS1_TS_LF_B_0004_005
08/08/2010 09:00	JPM-OS1_Offsh_0001_004		09/25/2010 21:00	JPM-OS1_HC_LF_B_0004_006
08/08/2010 18:00	JPM-OS1_Exit_0011_004		09/26/2010 02:00	JPM-OS1_Exit_0012_006
08/09/2010 11:00	JPM-OS1_HC_LF_B_0016_008		09/26/2010 09:00	JPM-OS1_Offsh_0014_002
08/09/2010 13:00	JPM-OS1_HC_LF_B_0018_007a		09/26/2010 11:00	JPM-OS1_HC_LF_B_0002_005
08/09/2010 14:00	JPM-OS1_HC_LF_B_0020_005		09/26/2010 19:00	JPM-OS1_HC_LF_B_0019_011
08/09/2010 20:00	JPM-OS1_HC_LF_B_0018_006		09/26/2010 21:00	JPM-OS1_HC_LF_B_0018_008
08/10/2010 02:00	JPM-OS1_HC_LF_A_0005_005		09/26/2010 22:00	JPM-OS1_HC_LF_B_0007_007
08/10/2010 06:00	JPM-OS1_HC_LF_B_0015_005		09/27/2010 01:00	JPM-OS1_Exit_0017_008
08/10/2010 10:00	JPM-OS1_TS_LF_B_0007_005		09/27/2010 02:00	JPM-OS1_HC_LF_B_0011_006

DRAFT

mm/dd/yyyy hh:mm	Storm Name		mm/dd/yyyy hh:mm	Storm Name
08/10/2010 13:00	JPM-OS1_TS_LF_B_0003_007		09/27/2010 10:00	JPM-OS1_TS_LF_B_0007_006
08/10/2010 17:00	JPM-OS1_HC_LF_B_0018_007		09/27/2010 15:00	JPM-OS1_TS_LF_A_0007_005
08/10/2010 19:00	JPM-OS1_HC_LF_B_0004_009		09/27/2010 20:00	JPM-OS1_HC_LF_B_0006_005
08/10/2010 20:00	JPM-OS1_HC_LF_B_0004_010		09/28/2010 08:00	JPM-OS1_HC_LF_B_001a_010
08/10/2010 21:00	JPM-OS1_HC_LF_B_001b_010		09/29/2010 03:00	JPM-OS1_HC_LF_B_0015_020
08/11/2010 05:00	JPM-OS1_TS_LF_B_0010_009		09/29/2010 04:00	JPM-OS1_HC_LF_B_0011_005
08/11/2010 08:00	JPM-OS1_HC_LF_B_001a_014		09/29/2010 05:00	JPM-OS1_HC_LF_B_0015_019
08/11/2010 10:00	JPM-OS1_HC_LF_B_0003_006		09/29/2010 13:00	JPM-OS1_TS_LF_B_0010_006
08/11/2010 22:00	JPM-OS1_HC_LF_B_0011_011		09/30/2010 03:00	JPM-OS1_HC_LF_B_0018_005
08/12/2010 01:00	JPM-OS1_HC_LF_A_0015_005		09/30/2010 06:00	JPM-OS1_HC_LF_B_0007_011
08/12/2010 05:00	JPM-OS1_TS_LF_B_0003_005		09/30/2010 14:00	JPM-OS1_HC_LF_B_0020_012
08/12/2010 11:00	JPM-OS1_Exit_0017_004		09/30/2010 16:00	JPM-OS1_Exit_0009_008
08/12/2010 21:00	JPM-OS1_HC_LF_A_0018_005a		09/30/2010 20:00	JPM-OS1_Exit_0002_004
08/13/2010 06:00	JPM-OS1_Exit_0016_005		09/30/2010 21:00	JPM-OS1_HC_LF_B_0002_006
08/13/2010 08:00	JPM-OS1_HC_LF_B_0020_014		10/01/2010 01:00	JPM-OS1_TS_LF_B_0003_006
08/13/2010 14:00	JPM-OS1_Offsh_0009_001		10/01/2010 04:00	JPM-OS1_HC_LF_B_0019_006
08/13/2010 18:00	JPM-OS1_HC_LF_B_0015_013		10/01/2010 06:00	JPM-OS1_Offsh_0001_003
08/13/2010 19:00	JPM-OS1_Exit_0009_010		10/01/2010 15:00	JPM-OS1_HC_LF_B_0019_016
08/14/2010 05:00	JPM-OS1_HC_LF_B_0016_009a		10/01/2010 17:00	JPM-OS1_HC_LF_B_0011_008
08/14/2010 09:00	JPM-OS1_HC_LF_B_0017_007		10/02/2010 04:00	JPM-OS1_HC_LF_B_0009_010
08/14/2010 11:00	JPM-OS1_HC_LF_B_017a_011		10/02/2010 05:00	JPM-OS1_HC_LF_B_0005_009
08/15/2010 03:00	JPM-OS1_HC_LF_A_0016_005		10/02/2010 14:00	JPM-OS1_Exit_0016_007
08/15/2010 04:00	JPM-OS1_Exit_0002_005		10/02/2010 17:00	JPM-OS1_TS_LF_B_0007_008
08/15/2010 06:00	JPM-OS1_Offsh_0017_003		10/02/2010 19:00	JPM-OS1_HC_LF_B_017a_006
08/15/2010 10:00	JPM-OS1_Exit_0017_007		10/03/2010 00:00	JPM-OS1_HC_LF_B_0018_008a
08/15/2010 16:00	JPM-OS1_TS_LF_A_0008_005		10/03/2010 01:00	JPM-OS1_Exit_0009_003
08/15/2010 20:00	JPM-OS1_Exit_0017_006		10/03/2010 05:00	JPM-OS1_TS_LF_B_0004_013
08/16/2010 06:00	JPM-OS1_TS_LF_B_0002_008		10/03/2010 13:00	JPM-OS1_HC_LF_B_0015_016
08/16/2010 13:00	JPM-OS1_HC_LF_B_0017_011		10/03/2010 14:00	JPM-OS1_HC_LF_B_0006_013
08/16/2010 18:00	JPM-OS1_HC_LF_B_0010_010		10/03/2010 17:00	JPM-OS1_HC_LF_B_017b_005
08/17/2010 14:00	JPM-OS1_TS_LF_B_0002_007		10/03/2010 18:00	JPM-OS1_Exit_0009_007
08/17/2010 16:00	JPM-OS1_HC_LF_A_0018_005		10/03/2010 20:00	JPM-OS1_HC_LF_B_0016_005
08/18/2010 01:00	JPM-OS1_Exit_0002_008		10/04/2010 07:00	JPM-OS1_Offsh_0013_003
08/18/2010 13:00	JPM-OS1_HC_LF_B_0016_010		10/05/2010 06:00	JPM-OS1_HC_LF_B_0012_005
08/18/2010 19:00	JPM-OS1_TS_LF_B_0004_011		10/05/2010 13:00	JPM-OS1_HC_LF_B_0011_007
08/18/2010 22:00	JPM-OS1_HC_LF_B_0020_017		10/05/2010 17:00	JPM-OS1_Exit_0001_006
08/19/2010 00:00	JPM-OS1_HC_LF_B_0019_015		10/05/2010 18:00	JPM-OS1_Offsh_0014_003
08/19/2010 06:00	JPM-OS1_TS_LF_B_0003_009		10/05/2010 21:00	JPM-OS1_HC_LF_A_0020_005
08/19/2010 07:00	JPM-OS1_HC_LF_B_0011_012		10/06/2010 03:00	JPM-OS1_HC_LF_B_0020_011
08/19/2010 11:00	JPM-OS1_Offsh_0011_001		10/06/2010 07:00	JPM-OS1_Offsh_0017_005
08/19/2010 15:00	JPM-OS1_HC_LF_B_0016_005a		10/06/2010 14:00	JPM-OS1_HC_LF_B_0006_010
08/20/2010 03:00	JPM-OS1_Exit_0008_005		10/07/2010 08:00	JPM-OS1_Exit_0019_010
08/20/2010 09:00	JPM-OS1_HC_LF_B_001b_007		10/07/2010 14:00	JPM-OS1_HC_LF_B_0017_006
08/20/2010 10:00	JPM-OS1_Offsh_0017_004		10/07/2010 17:00	JPM-OS1_TS_LF_B_0004_010
08/20/2010 14:00	JPM-OS1_HC_LF_B_0013_005		10/07/2010 21:00	JPM-OS1_HC_LF_B_0020_024
08/20/2010 19:00	JPM-OS1_HC_LF_B_0008_006		10/07/2010 22:00	JPM-OS1_Exit_0019_007
08/21/2010 02:00	JPM-OS1_HC_LF_B_0002_010		10/08/2010 03:00	JPM-OS1_Exit_0011_006
08/21/2010 07:00	JPM-OS1_HC_LF_B_001a_008		10/08/2010 08:00	JPM-OS1_HC_LF_B_0018_006a
08/21/2010 17:00	JPM-OS1_Exit_0011_005		10/08/2010 09:00	JPM-OS1_HC_LF_B_017b_006
08/21/2010 18:00	JPM-OS1_HC_LF_A_0007_005		10/09/2010 05:00	JPM-OS1_Offsh_0003_004
08/22/2010 02:00	JPM-OS1_HC_LF_B_0006_006		10/09/2010 11:00	JPM-OS1_HC_LF_B_0019_017
08/22/2010 03:00	JPM-OS1_HC_LF_B_001a_009		10/09/2010 16:00	JPM-OS1_HC_LF_B_0006_012
08/22/2010 10:00	JPM-OS1_HC_LF_B_0003_008		10/09/2010 22:00	JPM-OS1_HC_LF_B_0019_007
08/22/2010 11:00	JPM-OS1_HC_LF_B_0015_017		10/10/2010 07:00	JPM-OS1_HC_LF_B_0019_019
08/22/2010 22:00	JPM-OS1_Exit_0019_004		10/10/2010 12:00	JPM-OS1_TS_LF_A_0009_005
08/23/2010 04:00	JPM-OS1_HC_LF_B_0006_014		10/10/2010 13:00	JPM-OS1_TS_LF_A_0001_005

mm/dd/yyyy hh:mm	Storm Name		mm/dd/yyyy hh:mm	Storm Name
08/23/2010 12:00	JPM-OS1_Exit_0002_009		10/10/2010 16:00	JPM-OS1_HC_LF_B_0014_010
08/23/2010 18:00	JPM-OS1_Exit_0019_006		10/10/2010 19:00	JPM-OS1_HC_LF_B_0015_012
08/24/2010 06:00	JPM-OS1_HC_LF_B_0006_008		10/11/2010 08:00	JPM-OS1_HC_LF_B_0014_005
08/24/2010 10:00	JPM-OS1_HC_LF_B_001b_012		10/11/2010 18:00	JPM-OS1_Inland_0017_009
08/24/2010 12:00	JPM-OS1_Exit_0018_005		10/11/2010 19:00	JPM-OS1_Offsh_0018_004
08/24/2010 15:00	JPM-OS1_Exit_0009_009		10/12/2010 01:00	JPM-OS1_Offsh_0001_001
08/24/2010 17:00	JPM-OS1_HC_LF_B_0002_011		10/12/2010 10:00	JPM-OS1_HC_LF_B_0001_014
08/24/2010 23:00	JPM-OS1_HC_LF_B_017a_005		10/12/2010 11:00	JPM-OS1_HC_LF_B_0009_005
08/25/2010 04:00	JPM-OS1_HC_LF_B_0020_008		10/12/2010 20:00	JPM-OS1_HC_LF_B_0020_022
08/25/2010 11:00	JPM-OS1_Exit_0017_005		10/13/2010 00:00	JPM-OS1_HC_LF_B_0002_013
08/25/2010 22:00	JPM-OS1_HC_LF_B_0015_010		10/13/2010 04:00	JPM-OS1_Offsh_0016_004
08/27/2010 05:00	JPM-OS1_Offsh_0014_001		10/13/2010 12:00	JPM-OS1_HC_LF_B_017a_007
08/27/2010 07:00	JPM-OS1_HC_LF_B_017b_009		10/13/2010 13:00	JPM-OS1_Offsh_0009_002
08/27/2010 08:00	JPM-OS1_HC_LF_A_0014_005		10/13/2010 15:00	JPM-OS1_HC_LF_B_0020_010
08/27/2010 13:00	JPM-OS1_HC_LF_B_0009_007		10/13/2010 20:00	JPM-OS1_HC_LF_B_0019_020
08/27/2010 14:00	JPM-OS1_HC_LF_B_0019_009		10/14/2010 00:00	JPM-OS1_HC_LF_B_0016_007
08/27/2010 23:00	JPM-OS1_Exit_0012_004		10/14/2010 02:00	JPM-OS1_TS_LF_B_0003_010
08/28/2010 01:00	JPM-OS1_HC_LF_B_0017_010		10/14/2010 03:00	JPM-OS1_HC_LF_B_0001_015
08/28/2010 04:00	JPM-OS1_HC_LF_B_0002_012		10/14/2010 05:00	JPM-OS1_TS_LF_B_0009_005
08/28/2010 08:00	JPM-OS1_Offsh_0013_002		10/14/2010 07:00	JPM-OS1_TS_LF_B_0010_007
08/28/2010 14:00	JPM-OS1_Offsh_0008_002		10/14/2010 08:00	JPM-OS1_Exit_0012_009
08/28/2010 16:00	JPM-OS1_HC_LF_B_0016_007a		10/14/2010 11:00	JPM-OS1_Exit_0012_007
08/28/2010 18:00	JPM-OS1_Exit_0012_005		10/14/2010 18:00	JPM-OS1_HC_LF_B_0005_005
08/29/2010 02:00	JPM-OS1_HC_LF_B_0004_008		10/14/2010 19:00	JPM-OS1_HC_LF_B_017b_007
08/29/2010 03:00	JPM-OS1_TS_LF_B_0001_006		10/14/2010 20:00	JPM-OS1_Inland_0017_007
08/29/2010 18:00	JPM-OS1_HC_LF_B_0020_009		10/15/2010 16:00	JPM-OS1_HC_LF_B_0010_014
08/29/2010 21:00	JPM-OS1_HC_LF_B_0007_009		10/16/2010 08:00	JPM-OS1_HC_LF_A_0001_005
08/29/2010 22:00	JPM-OS1_HC_LF_B_0002_007		10/16/2010 11:00	JPM-OS1_TS_LF_B_0010_005
08/30/2010 00:00	JPM-OS1_Exit_0009_004		10/16/2010 14:00	JPM-OS1_TS_LF_B_0001_007
08/30/2010 13:00	JPM-OS1_HC_LF_B_0016_009		10/16/2010 18:00	JPM-OS1_HC_LF_B_001a_013
08/30/2010 15:00	JPM-OS1_HC_LF_B_0001_005		10/17/2010 00:00	JPM-OS1_Offsh_0014_004
08/30/2010 21:00	JPM-OS1_HC_LF_B_0019_018		10/17/2010 02:00	JPM-OS1_HC_LF_B_0001_009
08/31/2010 05:00	JPM-OS1_HC_LF_B_0010_007		10/17/2010 04:00	JPM-OS1_Exit_0009_011
08/31/2010 07:00	JPM-OS1_HC_LF_B_0004_007		10/17/2010 08:00	JPM-OS1_HC_LF_A_0003_005
08/31/2010 08:00	JPM-OS1_Exit_0008_006		10/17/2010 09:00	JPM-OS1_TS_LF_B_0008_006
08/31/2010 09:00	JPM-OS1_HC_LF_B_0020_023		10/17/2010 13:00	JPM-OS1_HC_LF_B_001b_011
08/31/2010 23:00	JPM-OS1_HC_LF_B_0006_016		10/18/2010 12:00	JPM-OS1_HC_LF_B_0002_008
09/01/2010 00:00	JPM-OS1_HC_LF_B_0007_008		10/18/2010 13:00	JPM-OS1_HC_LF_B_0019_012
09/01/2010 04:00	JPM-OS1_TS_LF_B_0001_005		10/19/2010 10:00	JPM-OS1_HC_LF_A_0012_005
09/01/2010 08:00	JPM-OS1_HC_LF_B_017a_009		10/19/2010 21:00	JPM-OS1_TS_LF_B_0003_011
09/01/2010 14:00	JPM-OS1_HC_LF_B_001b_015		10/20/2010 00:00	JPM-OS1_HC_LF_B_0018_005a
09/01/2010 19:00	JPM-OS1_TS_LF_B_0010_008		10/20/2010 02:00	JPM-OS1_Offsh_0001_002
09/02/2010 10:00	JPM-OS1_TS_LF_B_0009_007		10/20/2010 03:00	JPM-OS1_HC_LF_B_0019_013
09/02/2010 14:00	JPM-OS1_HC_LF_B_0012_009		10/20/2010 19:00	JPM-OS1_Exit_0003_005
09/02/2010 17:00	JPM-OS1_HC_LF_B_0001_010		10/21/2010 01:00	JPM-OS1_HC_LF_B_0011_009
09/02/2010 21:00	JPM-OS1_HC_LF_B_017a_010		10/21/2010 02:00	JPM-OS1_Offsh_0011_002
09/03/2010 07:00	JPM-OS1_HC_LF_B_0014_007		10/21/2010 06:00	JPM-OS1_HC_LF_B_0006_007
09/03/2010 12:00	JPM-OS1_HC_LF_A_0010_005		10/21/2010 13:00	JPM-OS1_HC_LF_B_0020_007
09/03/2010 20:00	JPM-OS1_HC_LF_B_0010_011		10/21/2010 16:00	JPM-OS1_HC_LF_B_0020_021
09/03/2010 22:00	JPM-OS1_Offsh_0008_003		10/21/2010 19:00	JPM-OS1_HC_LF_B_0010_013
09/04/2010 00:00	JPM-OS1_TS_LF_B_0001_008		10/22/2010 00:00	JPM-OS1_HC_LF_A_0013_005
09/04/2010 05:00	JPM-OS1_HC_LF_B_0017_005		10/22/2010 12:00	JPM-OS1_TS_LF_B_0004_008
09/04/2010 06:00	JPM-OS1_HC_LF_B_017b_011		10/22/2010 20:00	JPM-OS1_HC_LF_B_0005_008
09/04/2010 19:00	JPM-OS1_HC_LF_B_001b_006		10/23/2010 00:00	JPM-OS1_HC_LF_B_0019_014
09/04/2010 20:00	JPM-OS1_TS_LF_A_0003_005		10/23/2010 08:00	JPM-OS1_HC_LF_B_0018_009
09/05/2010 01:00	JPM-OS1_HC_LF_B_0001_007		10/23/2010 10:00	JPM-OS1_Exit_0019_005

mm/dd/yyyy hh:mm	Storm Name		mm/dd/yyyy hh:mm	Storm Name
09/05/2010 04:00	JPM-OS1_TS_LF_B_0006_007		10/23/2010 12:00	JPM-OS1_Offsh_0017_002
09/05/2010 07:00	JPM-OS1_Exit_0018_004		10/24/2010 03:00	JPM-OS1_TS_LF_B_0003_014
09/05/2010 16:00	JPM-OS1_TS_LF_A_0010_005		10/24/2010 10:00	JPM-OS1_Offsh_0009_004
09/05/2010 17:00	JPM-OS1_HC_LF_B_0006_015		10/24/2010 13:00	JPM-OS1_TS_LF_A_0002_005
09/05/2010 22:00	JPM-OS1_HC_LF_B_0015_008		10/24/2010 15:00	JPM-OS1_Exit_0002_006
09/06/2010 01:00	JPM-OS1_HC_LF_B_0012_008		10/24/2010 16:00	JPM-OS1_HC_LF_B_0016_006
09/06/2010 05:00	JPM-OS1_Exit_0016_006		10/24/2010 17:00	JPM-OS1_HC_LF_B_0007_005
09/06/2010 07:00	JPM-OS1_TS_LF_B_0008_008		10/25/2010 02:00	JPM-OS1_Offsh_0011_004
09/06/2010 17:00	JPM-OS1_HC_LF_B_0005_010		10/25/2010 14:00	JPM-OS1_Offsh_0018_003
09/07/2010 09:00	JPM-OS1_HC_LF_B_0016_008a		10/25/2010 19:00	JPM-OS1_HC_LF_B_0010_009
09/07/2010 13:00	JPM-OS1_HC_LF_B_0020_015		10/25/2010 20:00	JPM-OS1_HC_LF_B_0007_006
09/07/2010 17:00	JPM-OS1_HC_LF_B_0012_006		10/26/2010 00:00	JPM-OS1_HC_LF_B_0014_008
09/08/2010 06:00	JPM-OS1_HC_LF_B_0015_006		10/26/2010 03:00	JPM-OS1_TS_LF_B_0004_006
09/08/2010 08:00	JPM-OS1_HC_LF_B_0001_012		10/26/2010 08:00	JPM-OS1_TS_LF_B_0007_009
09/08/2010 11:00	JPM-OS1_HC_LF_B_0003_007		10/26/2010 15:00	JPM-OS1_Inland_0017_005
09/09/2010 07:00	JPM-OS1_HC_LF_B_0002_014		10/26/2010 18:00	JPM-OS1_Offsh_0016_005
09/09/2010 08:00	JPM-OS1_Exit_0019_003		10/26/2010 20:00	JPM-OS1_TS_LF_A_0004_005
09/09/2010 10:00	JPM-OS1_TS_LF_B_0005_005		10/27/2010 00:00	JPM-OS1_TS_LF_B_0004_012
09/09/2010 13:00	JPM-OS1_HC_LF_B_0020_006		10/27/2010 01:00	JPM-OS1_HC_LF_B_017b_010
09/09/2010 15:00	JPM-OS1_HC_LF_B_0019_005		10/27/2010 04:00	JPM-OS1_Offsh_0007_004
09/09/2010 20:00	JPM-OS1_HC_LF_B_0020_013		10/27/2010 06:00	JPM-OS1_HC_LF_B_001b_009
09/10/2010 03:00	JPM-OS1_Exit_0002_007		10/27/2010 14:00	JPM-OS1_HC_LF_B_0015_014
09/10/2010 04:00	JPM-OS1_HC_LF_B_001a_011		10/27/2010 15:00	JPM-OS1_HC_LF_B_0014_009
09/10/2010 22:00	JPM-OS1_HC_LF_B_0020_020		10/27/2010 16:00	JPM-OS1_HC_LF_B_0010_008
09/11/2010 03:00	JPM-OS1_HC_LF_B_0001_008		10/28/2010 08:00	JPM-OS1_HC_LF_B_0002_009
09/11/2010 06:00	JPM-OS1_HC_LF_B_0012_007		10/28/2010 11:00	JPM-OS1_Offsh_0018_001
09/11/2010 12:00	JPM-OS1_Offsh_0008_004		10/28/2010 19:00	JPM-OS1_Offsh_0007_003
09/12/2010 03:00	JPM-OS1_HC_LF_B_0001_006		10/29/2010 05:00	JPM-OS1_HC_LF_B_0015_018
09/12/2010 09:00	JPM-OS1_HC_LF_B_001a_006		10/29/2010 09:00	JPM-OS1_HC_LF_B_0017_008
09/13/2010 20:00	JPM-OS1_TS_LF_B_0006_006		10/29/2010 19:00	JPM-OS1_HC_LF_B_0011_010
09/13/2010 23:00	JPM-OS1_HC_LF_B_0004_005		10/29/2010 22:00	JPM-OS1_HC_LF_B_0015_011
09/14/2010 03:00	JPM-OS1_Exit_0008_004		10/30/2010 06:00	JPM-OS1_HC_LF_B_0003_005
09/14/2010 05:00	JPM-OS1_HC_LF_B_0013_008		10/31/2010 00:00	JPM-OS1_TS_LF_B_0003_012
09/14/2010 14:00	JPM-OS1_HC_LF_B_0010_015			

DRAFT

DRAFT

US Army Corps of Engineers®

COST ENGINEERING SUB - APPENDIX

US Army Corps of Engineers®

Norfolk District

COLLIER COUNTY COASTAL STORM RISK MANAGEMENT (CSRM) STUDY

Norfolk, Virginia

COST ENGINEERING SUB-APPENDIX

JULY 2020

PAGE INTENTIONALLY LEFT BLANK

Table of Contents

CHAPTER 1 INTRODUCTION 5
1.1 COST NARRATIVE 5
1.2 PROJECT DESCRIPTION 5
CHAPTER 2 ALTERNATIVES 6
2.1 Alternative 0 – No Action 6
2.2 Alternative 1 – Beach Only 6
2.3 Alternative 2 – Beach and Structural 6
2.4 Alternative 3 – Beach and Nonstructural 7
2.5 Alternative 4 – Combination Structural and Nonstrutural 7
2.6 Alternative 4A – Combination Structural and Nonstrutural minus 7
CHAPTER 3 COST ESTIMATE 8
3.1 BASIS OF ESTIMATE 8
3.2 CONTINGENCY 8
3.3 PLANNING, ENGINEERING, AND DESIGN (PED) 8
3.4 CONSTRUCTION MANAGEMENT (S&A) 9
3.5 TOTAL PROJECT COST SUMMARY (TPCS) 9

PAGE INTENTIONALLY LEFT BLANK

CHAPTER 1 INTRODUCTION

1.1 COST NARRATIVE

Corps of Engineers cost estimates for planning purposes are prepared in accordance with the following guidance:

- Engineer Technical Letter (ETL) 1110-2-573, Construction Cost Estimating Guide for CivilWorks, 30 September 2008
- Engineer Regulation (ER) 1110-1-1300, Cost Engineering Policy and General Requirements, 26 March 1993
- ER 1110-2-1302, Civil Works Cost Engineering, 15 September 2008
- ER 1110-2-1150, Engineering and Design For Civil Works Projects, 31 August 1999
- ER 1105-2-100, Planning Guidance Notebook, 22 April 2000, as amended
- Engineer Manual (EM) 1110-2-1304 (Tables revised 30 March 2007), Civil Works Construction Cost Index System, 31 March 2013
- CECW-CP Memorandum For Distribution, Subject: Initiatives To Improve The Accuracy Of Total Project Costs In Civil Works Feasibility Studies Requiring Congressional Authorization, 19 Sep 2007
- CECW-CE Memorandum For Distribution, Subject: Application of Cost Risk Analysis Methods To Develop Contingencies For Civil Works Total Project Costs, 3 Jul 2007
- Cost and Schedule Risk Analysis Guidance, 17 May 2009

The goals of the Collier County Coastal Storm Risk Management Feasibility Study are to present a Total Project Cost (construction and non-construction costs) for the Tentatively Selected Plan (TSP) at the current price level to be used for project justification/authorization and to project costs forward in time for budgeting purposes. In addition, the costing efforts are intended to produce a final product, or cost estimate, that is reliable and accurate and that supports the definition of the Government's and the non-Federal sponsor's obligations.

1.2 PROJECT DESCRIPTION

The feasibility study formulates, evaluates, and compares reasonable solutions to reduce the risk of coastal storm damages to property and infrastructure and minimize risk to public safety in the study area. The study area is located entirely in Collier County, Florida.

A number of alternatives were considered by the PDT in order to accomplish the goals of reducing the risk of coastal storm damages and minimize risk to public safety. These alternatives

consist of shoreline stabilization via revetments at Marco Island, floodproofing/elevating/acquisition of both critical and noncritical structures found throughout the study areas, and beach nourishment at select areas.

CHAPTER 2 ALTERNATIVES

2.1 Alternative 0 – No Action

Alternative 0 includes taking no action.

2.2 Alternative 1 – Beach Only

The beach only alternative evaluated the feasibility of constructing higher and wider features along the full length of Collier County beaches. The beach berm and dune measures were designed and modeled from R1 (northern county line) to R89 (northern side of the Gordon Pass inlet), and on Marco Island from R136-R148. The scenarios modeled include berm widths from existing to 150 feet and dune heights from existing to 10-11 feet high. Although they are sacrificial features, beach berm and dune are considered structural measures and are designed to modify the elements associated with coastal flood inundation and erosion damages.

2.3 Alternative 2 – Beach and Structural

The beach measures and alignments in this alternative are identical to those included in the first alternative. In addition to beach measures several hard structural measures were studied. Structural measures are features designed to modify the elements of flooding. They are items that can be used to manage peak flows, reduce volumes, or direct waters away or through designed systems. The structural measures included in Alternative 2 are surge barriers, floodwalls, floodgates, and revetment. Other structural features were accounted for in the analysis, such as the jetties necessary to harden channel sides for construction of barriers, pump stations necessary to combat interior flooding, and NNBF.

2.4 Alternative 3 – Beach and Nonstructural

The beach measures, alignments, and associated NNBF in this alternative are identical to those included in the first alternative. In addition to beach measures several nonstructural measures were studied. Nonstructural measures are techniques for reducing accountable flood damages within floodplains. These techniques consisted of measures such as acquisition, dry floodproofing, and elevation. In each planning area, in lieu of large-scale structural features, these techniques were considered to help buy-down risk of future storms. This alternative does not provide complete coverage of the study area. The structures included in alternative 3 were logically aggregated and selected from damage centers predicted for future coastal storms. Only structures that are subjected to nonstructural measures will benefit from reduction of storm related damages

2.5 Alternative 4 – Combination Structural and Nonstrutural

The beach measures, alignments and associated NNBF in this alternative are identical to those included in the first alternative. In addition to beach measures, *non*structural measures were included in planning areas 2, 4, and 6; and structural measures were included in planning areas 1, 3, and 5. The structural measures included in Alternative 4 are identical to those included in Alternative 2, including surge barriers, floodwalls, floodgates, and revetment. Other structural features were accounted for in the analysis, such as the jetties necessary to harden channel sides for construction of barriers, pump stations necessary to combat interior flooding, and NNBF

2.6 Alternative 4A – Combination Structural and Nonstrutural minus

This alternative is identical to Alternative 4 except it excludes planning area 4.

CHAPTER 3 COST ESTIMATE

3.1 BASIS OF ESTIMATE

The structural construction cost estimate was developed using Micro-Computer Aided Cost Estimating System (MCACES), Second Generation (MII) using the appropriate Work Breakdown Structure (WBS). These cost estimates were developed utilizing cost resources such as RSMeans, MII Cost Libraries, and vendor quotations and are supported by the preferred labor, equipment, materials, and crew/production breakdown to align with current construction methods. Quantities were provided by the PDT and checked by the cost engineer.

The nonstructural cost estimate was developed based on data obtained by the PDT from the USACE NATIONAL NONSTUCTURAL COMMITTEE BEST PRACTICE GUIDE 2020-01 and New Orleans District (2012 Donaldson to the Gulf Study). This data consists of square foot costs for each structure based on type, size and elevation desired.

The MII report is provided at Attachment 1 to this cost engineering appendix.

3.2 CONTINGENCY

The goal in contingency development is to identify the uncertainties associated with an item of work or task, forecast the cost/risk relationship, and assign a value to this task that would limit the cost risk to an acceptable degree of confidence. Consideration must be given to the details available at each stage of planning, design, or construction for which a cost estimate is being prepared.

An Abbreviated Risk Analysis (ARA) was conducted in according with the procedures outlined in the manual entitled "Cost and Schedule Risk Analysis Guidance", dated 17 May 2009. Members of the Norfolk District Project Delivery Team (PDT) participated in a cost risk analysis brainstorming session to identify risks associated with the project. The Risk Analysis utilized the "LOW RISK" category as the project involves typical construction with possible life safety issues. Assumptions were made to the likelihood and impact of each risk item, as well as the probability of occurrence and magnitude of the impact if it were to occur. Adjustments were made to the analysis upon review by the PDT and the final contingencies were established.

The ARA Report is provided as Attachment 2 to this Cost Engineering Appendix.

3.3 PLANNING, ENGINEERING, AND DESIGN (PED)

Costs for Planning, Engineering and Design (PED) have been included based on the standard percentage included in the Total Project Cost Summary (TPCS). The percentage breakout can be found in the TPCS.

3.4 CONSTRUCTION MANAGEMENT (S&A)

Costs for Construction Management (S&A) have been included based on the standard percentage included in the Total Project Cost Summary (TPCS). The percentage breakout can be found in the TPCS.

3.5 TOTAL PROJECT COST SUMMARY (TPCS)

The Total Project Cost Summary (TPCS) addresses the inflation through project completion; accomplished by escalation to the mid-point of construction. The TPCS includes Federal and non-Federal costs for all construction features of the project, PED and S&A, along with the appropriate contingencies and escalation associated with each of these activities. The TPCS is formatted according to the CWWBS. The TPCS was prepared using the MCACES/MII cost estimate, contingencies developed by the ARA, the project design and construction schedule, and estimates of PED and S&A prepared by others.

The TPCS for the Structural, Nonstructural and Beach Nourishment TSPs are provided as Attachments 3, 4 and 5 to this Cost Engineering Appendix.

ATTACHMENT 1
MII Report

ATTACHMENT 2
Abbreviated Risk Analysis

Abbreviated Risk Analysis

Project (less than $40M): **Collier County CSRM Feasibility Study** — **Alternative:** **Recommended Plan**

Project Development Stage/Alternative: **Feasibility (Recommended Plan)**

Risk Category: **Moderate Risk: Typical Project Construction Type** — **Meeting Date:** **3/18/2020**

Total Estimated Construction Contract Cost = **$ 1,809,752,668**

	CWWBS	Feature of Work	Contract Cost		% Contingency	$ Contingency	Total
1	17 BEACH REPLENISHMENT	BEACH REPLENISHMENT	$ 1,314,492,157		26.82%	$ 352,501,481	$ 1,666,993,639
2	16 BANK STABILIZATION	MARCO ISLAND REVETMENT	$ -		0.00%	$ -	$ -
3	11 02 FLOODWALLS	BONITA BEACH ROAD ALIGNMENT	$ 66,627,131		30.07%	$ 20,034,007	$ 86,661,138
4	11 02 FLOODWALLS	SEAGATE DR. ALIGNMENT	$ 33,006,666		30.07%	$ 9,924,723	$ 42,931,389
5	11 02 FLOODWALLS	WIGGINS PASS ALIGNMENT	$ 222,357,401		30.07%	$ 66,860,297	$ 289,217,697
6	11 02 FLOODWALLS	DOCTOR'S PASS ALIGNMENT	$ 38,799,274		30.07%	$ 11,666,493	$ 50,465,767
7	11 02 FLOODWALLS	TAMIAMI TRAIL ALIGNMENT	$ 247,801,615		30.07%	$ 74,511,077	$ 322,312,692.24
8					0.00%	$ -	$ -
9			$ -		0.00%	$ -	$ -
17	All Other	**Remaining Construction Items**	$ (113,331,577)	*0.0%*	0.00%	$ 1,809,752,668	$ 1,696,421,091
18	30 PLANNING, ENGINEERING, AND DESIGN	**Planning, Engineering, & Design**	$ 435,788,442		0.00%	$ -	$ 435,788,442
19	31 CONSTRUCTION MANAGEMENT	**Construction Management**	$ 133,197,796		0.00%	$ 0	$ 133,197,797
XX	FIXED DOLLAR RISK ADD (EQUALLY DISPERSED TO ALL, MUST INCLUDE JUSTIFICATION SEE BELOW)					$ -	

Totals					
Real Estate	$ -	0.00%	$ -	$ -	
Total Construction Estimate	$ 1,809,752,668	161.22%	2917704780	$ 4,727,457,448	
Total Planning, Engineering & Design	$ 435,788,442	0.00%	$ -	$ 435,788,442	
Total Construction Management	$ 133,197,796	0.00%	$ 0	$ 133,197,797	
Total	**$ 2,378,738,907**	**123%**	**$ 2,917,704,780**	**$ 5,296,443,687**	
		Base	**50%**	**80%**	
	Range Estimate ($000's)	$2,378,739k	$4,129,362k	$5,296,444k	

* 50% based on base is at 5% CL.

Fixed Dollar Risk Add: (Allows for additional risk to be added to the risk analsyis. Must include justification. Does not allocate to Real Estate.	

Collier County CSRM Feasibility Study Recor 7-Jan-20

Feasibility (Recommended Plan)

Abbreviated Risk Analysis

Meeting Date: 18-Mar-20

Risk Level

	Negligible	Marginal	Moderate	Significant	Critical
Very Likely	2	3	4	5	5
Likely	1	2	3	4	5
Possible	0	1	2	3	4
Unlikely	0	0	1	2	3

Risk Register

Risk Element	Feature of Work	Concerns Pull Down Tab (ENABLE MACROS THRU TRUST CENTER) (Choose ALL that apply)	Concerns	PDT Discussions & Conclusions (Include logic & justification for choice of Likelihood & Impact)	Impact	Likelihood	Risk Level
Project Scope Growth					**Maximum Project Growth**		**75%**
PS-1	BEACH REPLENISHMENT	• Potential for scope growth, added features and quantities?	• Potential for scope growth, added features and quantities? • Design confidence?	Overall project scope is both simple and straightforward. Bank revetments are not complicated. Scope changes are not likely, unless mangroves are discovered. In the event that mangroves	Marginal	Possible	1
PS-2	MARCO ISLAND REVETMENT	• Potential for scope growth, added features and quantities?	• Potential for scope growth, added features and quantities? • Design confidence?	Overall project scope is both simple and straightforward. Bank revetments are not complicated. Scope changes are not likely, unless mangroves are discovered. In the event that mangroves	Marginal	Likely	N/A
PS-3	BONITA BEACH ROAD ALIGNMENT	• Potential for scope growth, added features and quantities?	• Potential for scope growth, added features and quantities? • Design confidence?	Overall project scope is both simple and straightforward. Bank revetments are not complicated. Scope changes are not likely, unless mangroves are discovered. In the event that mangroves	Moderate	Possible	2
PS-4	SEAGATE DR. ALIGNMENT	• Potential for scope growth, added features and quantities?	• Potential for scope growth, added features and quantities? • Design confidence?	Overall project scope is both simple and straightforward. Bank revetments are not complicated. Scope changes are not likely, unless mangroves are discovered. In the event that mangroves	Moderate	Possible	2
PS-5	WIGGINS PASS ALIGNMENT	• Potential for scope growth, added features and quantities?	• Potential for scope growth, added features and quantities? • Design confidence?	Overall project scope is both simple and straightforward. Bank revetments are not complicated. Scope changes are not likely, unless mangroves are discovered. In the event that mangroves	Moderate	Possible	2
PS-6	DOCTOR'S PASS ALIGNMENT	• Potential for scope growth, added features and quantities?	• Potential for scope growth, added features and quantities? • Design confidence?	Overall project scope is both simple and straightforward. Bank revetments are not complicated. Scope changes are not likely, unless mangroves are discovered. In the event that mangroves	Moderate	Possible	2
PS-7	TAMIAMI TRAIL ALIGNMENT	• Potential for scope growth, added features and quantities?	• Potential for scope growth, added features and quantities? • Design confidence?	Overall project scope is both simple and straightforward. Bank revetments are not complicated. Scope changes are not likely, unless mangroves are discovered. In the event that mangroves	Moderate	Possible	2
PS-18	Planning, Engineering, & Design	• Design confidence?	• Defer soil borings/geotech exploration to pre-construction PED for beach projects only • Usage of G2CRM • Inclusion of inland bay areas in study scope	1.) New borrow sites may be required which would increase costs for develping those sand sources (M). 2.) Discovery of subsurface conditions from the ones assumed could negatively impact C&S (L). 3.) Coastal/H&H engineers unfamiliar with software, could increase cost and schedule (M). 4.) Structural issues due to karst geology may induce piping failures (M). 5.)	Moderate	Possible	2
PS-19	Construction Management	• Potential for scope growth, added features and quantities?	• Potential for scope growth, added features and quantities? • Project accomplish intent?	Potential Scope Growth would result in greater duration for construction management personnel.	Marginal	Possible	1
Acquisition Strategy					**Maximum Project Growth**		**30%**
AS-1	BEACH REPLENISHMENT	• Contracting plan firmly established?	•(Real Estate) Obtaining Perpetuity Easements • Contracting plan firmly established? • Limited bid competition anticipated? • Accelerated schedule or harsh weather schedule? • 8a or small business likely? • High-risk acquisition limits competition, design/build?	Acquisition Strategy is unknown at this time. Conversations with Contracting Personnel indicate potential IDIQ or RFP methods. There is a potential limit of interested bidders, decreasing overall competitiveness.	Moderate	Possible	2
AS-2	MARCO ISLAND REVETMENT	• Contracting plan firmly established?	•(Real Estate) Obtaining Perpetuity Easements • Contracting plan firmly established? • Limited bid competition anticipated? • Accelerated schedule or harsh weather schedule?	Acquisition Strategy is unknown at this time. Conversations with Contracting Personnel indicate potential IDIQ or RFP methods. There is a potential limit of interested bidders, decreasing overall competitiveness.	Moderate	Possible	N/A
AS-3	BONITA BEACH ROAD ALIGNMENT	• Contracting plan firmly established?	•(Real Estate) Obtaining Perpetuity Easements • Contracting plan firmly established? • Limited bid competition anticipated? • Accelerated schedule or harsh weather schedule?	Acquisition Strategy is unknown at this time. Conversations with Contracting Personnel indicate potential IDIQ or RFP methods. There is a potential limit of interested bidders, decreasing overall competitiveness.	Moderate	Possible	2
AS-4	SEAGATE DR. ALIGNMENT	• Contracting plan firmly established?	•(Real Estate) Obtaining Perpetuity Easements • Contracting plan firmly established? • Limited bid competition anticipated? • Accelerated schedule or harsh weather schedule?	Acquisition Strategy is unknown at this time. Conversations with Contracting Personnel indicate potential IDIQ or RFP methods. There is a potential limit of interested bidders, decreasing overall competitiveness.	Moderate	Possible	2
AS-5	WIGGINS PASS ALIGNMENT	• Contracting plan firmly established?	•(Real Estate) Obtaining Perpetuity Easements • Contracting plan firmly established? • Limited bid competition anticipated? • Accelerated schedule or harsh weather schedule?	Acquisition Strategy is unknown at this time. Conversations with Contracting Personnel indicate potential IDIQ or RFP methods. There is a potential limit of interested bidders, decreasing overall competitiveness.	Moderate	Possible	2
AS-6	DOCTOR'S PASS ALIGNMENT	• Contracting plan firmly established?	•(Real Estate) Obtaining Perpetuity Easements • Contracting plan firmly established? • Limited bid competition anticipated? • Accelerated schedule or harsh weather schedule?	Acquisition Strategy is unknown at this time. Conversations with Contracting Personnel indicate potential IDIQ or RFP methods. There is a potential limit of interested bidders, decreasing overall competitiveness.	Moderate	Possible	2

AS-7	TAMIAMI TRAIL ALIGNMENT	• Contracting plan firmly established?	•(Real Estate) Obtaining Perpetuity Easements • Contracting plan firmly established? • Limited bid competition anticipated? • Accelerated schedule or harsh weather schedule?	Acquisition Strategy is unknown at this time. Conversations with Contracting Personnel indicate potential IDIQ or RFP methods. There is a potential limit of interested bidders, decreasing overall competitiveness.	Moderate	Possible	2
AS-19	Construction Management	• Bid schedule developed to reduce quantity risks?	• Contracting plan firmly established? • 8a or small business likely? • Requirement for subcontracting?	Contract Acquisition strategy can affect the overall requirements for construction management. Expedited Schedule, or multiple contract awards can increase the requirement of onsite	Marginal	Possible	1
Construction Elements						**Maximum Project Growth**	**25%**
CE-1	BEACH REPLENISHMENT	• High risk or complex construction elements, site access, in-water?	• Accelerated schedule or harsh weather schedule? • High risk or complex construction elements, site access, in-water? • Special mobilization? • Potential for construction modification and claims?	Overall Construction is both simple and straightforward. Construction Elements include site clearing and revetment placement. Potential issues include site access and material handling.	Moderate	Possible	2
CE-2	MARCO ISLAND REVETMENT	• High risk or complex construction elements, site access, in-water?	• Accelerated schedule or harsh weather schedule? • High risk or complex construction elements, site access, in-water? • Special mobilization? • Potential for construction modification and claims?	Overall Construction is both simple and straightforward. Construction Elements include site clearing and revetment placement. Potential issues include site access and material handling.	Moderate	Possible	N/A
CE-3	BONITA BEACH ROAD ALIGNMENT	• High risk or complex construction elements, site access, in-water?	• Accelerated schedule or harsh weather schedule? • High risk or complex construction elements, site access, in-water? • Special mobilization? • Potential for construction modification and claims?	Overall Construction is both simple and straightforward. Construction Elements include site clearing and revetment placement. Potential issues include site access and material handling.	Moderate	Possible	2
CE-4	SEAGATE DR. ALIGNMENT	• High risk or complex construction elements, site access, in-water?	• Accelerated schedule or harsh weather schedule? • High risk or complex construction elements, site access, in-water? • Special mobilization? • Potential for construction modification and claims?	Overall Construction is both simple and straightforward. Construction Elements include site clearing and revetment placement. Potential issues include site access and material handling.	Moderate	Possible	2
CE-5	WIGGINS PASS ALIGNMENT	• High risk or complex construction elements, site access, in-water?	• Accelerated schedule or harsh weather schedule? • High risk or complex construction elements, site access, in-water? • Special mobilization? • Potential for construction modification and claims?	Overall Construction is both simple and straightforward. Construction Elements include site clearing and revetment placement. Potential issues include site access and material handling.	Moderate	Possible	2
CE-6	DOCTOR'S PASS ALIGNMENT	• High risk or complex construction elements, site access, in-water?	• Accelerated schedule or harsh weather schedule? • High risk or complex construction elements, site access, in-water? • Special mobilization? • Potential for construction modification and claims?	Overall Construction is both simple and straightforward. Construction Elements include site clearing and revetment placement. Potential issues include site access and material handling.	Moderate	Possible	2
CE-7	TAMIAMI TRAIL ALIGNMENT	• High risk or complex construction elements, site access, in-water?	• Accelerated schedule or harsh weather schedule? • High risk or complex construction elements, site access, in-water? • Special mobilization? • Potential for construction modification and claims?	Overall Construction is both simple and straightforward. Construction Elements include site clearing and revetment placement. Potential issues include site access and material handling.	Moderate	Possible	2
CE-19	Construction Management	• High risk or complex construction elements, site access, in-water?	• Accelerated schedule or harsh weather schedule? • High risk or complex construction elements, site access, in-water? • Water care and diversion plan?		Negligible	Unlikely	0
Quantities for Current Scope						**Maximum Project Growth**	**20%**
Q-1	BEACH REPLENISHMENT	• Possibility for increased quantities due to loss, waste, or subsidence?	• Level of confidence based on design and assumptions? • Possibility for increased quantities due to loss, waste, or subsidence? • Appropriate methods applied to calculate quantities? • Sufficient investigations to develop quantities? • Quality control check applied?	Depending on multiple site studies yet to be done, given quantities are likely to change.	Moderate	Possible	2
Q-2	MARCO ISLAND REVETMENT	• Possibility for increased quantities due to loss, waste, or subsidence?	• Level of confidence based on design and assumptions? • Possibility for increased quantities due to loss, waste, or subsidence? • Appropriate methods applied to calculate quantities? • Sufficient investigations to develop quantities? • Quality control check applied?	Depending on multiple site studies yet to be done, given quantities are likely to change.	Moderate	Possible	N/A
Q-3	BONITA BEACH ROAD ALIGNMENT	• Possibility for increased quantities due to loss, waste, or subsidence?	• Level of confidence based on design and assumptions? • Possibility for increased quantities due to loss, waste, or subsidence? • Appropriate methods applied to calculate quantities? • Sufficient investigations to develop quantities? • Quality control check applied?	Depending on multiple site studies yet to be done, given quantities are likely to change.	Moderate	Possible	2
Q-4	SEAGATE DR. ALIGNMENT	• Possibility for increased quantities due to loss, waste, or subsidence?	• Level of confidence based on design and assumptions? • Possibility for increased quantities due to loss, waste, or subsidence? • Appropriate methods applied to calculate quantities? • Sufficient investigations to develop quantities? • Quality control check applied?	Depending on multiple site studies yet to be done, given quantities are likely to change.	Moderate	Possible	2
Q-5	WIGGINS PASS ALIGNMENT	• Possibility for increased quantities due to loss, waste, or subsidence?	• Level of confidence based on design and assumptions? • Possibility for increased quantities due to loss, waste, or subsidence? • Appropriate methods applied to calculate quantities? • Sufficient investigations to develop quantities? • Quality control check applied?	Depending on multiple site studies yet to be done, given quantities are likely to change.	Moderate	Possible	2

Q-6	DOCTOR'S PASS ALIGNMENT	• Possibility for increased quantities due to loss, waste, or subsidence?	• Level of confidence based on design and assumptions? • Possibility for increased quantities due to loss, waste, or subsidence? • Appropriate methods applied to calculate quantities? • Sufficient investigations to develop quantities? • Quality control check applied?	Depending on multiple site studies yet to be done, given quantities are likely to change.	Moderate	Possible	2
Q-7	TAMIAMI TRAIL ALIGNMENT	• Possibility for increased quantities due to loss, waste, or subsidence?	• Level of confidence based on design and assumptions? • Possibility for increased quantities due to loss, waste, or subsidence? • Appropriate methods applied to calculate quantities? • Sufficient investigations to develop quantities? • Quality control check applied?	Depending on multiple site studies yet to be done, given quantities are likely to change.	Moderate	Possible	2
Specialty Fabrication or Equipment						**Maximum Project Growth**	**75%**
FE-1	BEACH REPLENISHMENT	• Level of confidence based on design and assumptions?	• Level of confidence based on design and assumptions?	No specialty fabrication is expected to be used or needed. Project scope/construction means do not require any specialty equipment. It is unlikely work will have to be done from the	Moderate	Unlikely	1
FE-2	MARCO ISLAND REVETMENT	• Level of confidence based on design and assumptions?	• Level of confidence based on design and assumptions?	No specialty fabrication is expected to be used or needed. Project scope/construction means do not require any specialty equipment. It is unlikely work will have to be done from the	Moderate	Unlikely	N/A
FE-3	BONITA BEACH ROAD ALIGNMENT	• Level of confidence based on design and assumptions?	• Level of confidence based on design and assumptions?	No specialty fabrication is expected to be used or needed. Project scope/construction means do not require any specialty equipment. It is unlikely work will have to be done from the	Moderate	Unlikely	1
FE-4	SEAGATE DR. ALIGNMENT	• Level of confidence based on design and assumptions?	• Level of confidence based on design and assumptions?	No specialty fabrication is expected to be used or needed. Project scope/construction means do not require any specialty equipment. It is unlikely work will have to be done from the	Moderate	Unlikely	1
FE-5	WIGGINS PASS ALIGNMENT	• Level of confidence based on design and assumptions?	• Level of confidence based on design and assumptions?	No specialty fabrication is expected to be used or needed. Project scope/construction means do not require any specialty equipment. It is unlikely work will have to be done from the	Moderate	Unlikely	1
FE-6	DOCTOR'S PASS ALIGNMENT	• Level of confidence based on design and assumptions?	• Level of confidence based on design and assumptions?	No specialty fabrication is expected to be used or needed. Project scope/construction means do not require any specialty equipment. It is unlikely work will have to be done from the	Moderate	Unlikely	1
FE-7	TAMIAMI TRAIL ALIGNMENT	• Level of confidence based on design and assumptions?	• Level of confidence based on design and assumptions?	No specialty fabrication is expected to be used or needed. Project scope/construction means do not require any specialty equipment. It is unlikely work will have to be done from the	Moderate	Unlikely	1
Cost Estimate Assumptions						**Maximum Project Growth**	**35%**
CT-1	BEACH REPLENISHMENT	• Lack confidence on critical cost items?	• Reliability and number of key quotes? • Assumptions related to prime and subcontractor markups/assignments? • Assumptions regarding crew, productivity, overtime? • Lack confidence on critical cost items?	Current Working Estimate is based on historical contract awards. Assumptions related to prime/sub contractors have been made, but could be different in execution. At this phase of the project, the cost estimate seems to be sound based on the current scope of work, with few critical assumptions being made.	Moderate	Possible	2
CT-2	MARCO ISLAND REVETMENT	• Lack confidence on critical cost items?	• Reliability and number of key quotes? • Assumptions related to prime and subcontractor markups/assignments? • Assumptions regarding crew, productivity, overtime? • Lack confidence on critical cost items?	Current Working Estimate is based on historical contract awards. Assumptions related to prime/sub contractors have been made, but could be different in execution. At this phase of the project, the cost estimate seems to be sound based on the current scope of work, with few critical assumptions being made.	Moderate	Possible	N/A
CT-3	BONITA BEACH ROAD ALIGNMENT	• Lack confidence on critical cost items?	• Reliability and number of key quotes? • Assumptions related to prime and subcontractor markups/assignments? • Assumptions regarding crew, productivity, overtime? • Lack confidence on critical cost items?	Current Working Estimate is based on historical contract awards. Assumptions related to prime/sub contractors have been made, but could be different in execution. At this phase of the project, the cost estimate seems to be sound based on the current scope of work, with few critical assumptions being made.	Moderate	Possible	2
CT-4	SEAGATE DR. ALIGNMENT	• Lack confidence on critical cost items?	• Reliability and number of key quotes? • Assumptions related to prime and subcontractor markups/assignments? • Assumptions regarding crew, productivity, overtime? • Lack confidence on critical cost items?	Current Working Estimate is based on historical contract awards. Assumptions related to prime/sub contractors have been made, but could be different in execution. At this phase of the project, the cost estimate seems to be sound based on the current scope of work, with few critical assumptions being made.	Moderate	Possible	2
CT-5	WIGGINS PASS ALIGNMENT	• Lack confidence on critical cost items?	• Reliability and number of key quotes? • Assumptions related to prime and subcontractor markups/assignments? • Assumptions regarding crew, productivity, overtime? • Lack confidence on critical cost items?	Current Working Estimate is based on historical contract awards. Assumptions related to prime/sub contractors have been made, but could be different in execution. At this phase of the project, the cost estimate seems to be sound based on the current scope of work, with few critical assumptions being made.	Moderate	Possible	2
CT-6	DOCTOR'S PASS ALIGNMENT	• Lack confidence on critical cost items?	• Reliability and number of key quotes? • Assumptions related to prime and subcontractor markups/assignments? • Assumptions regarding crew, productivity, overtime? • Lack confidence on critical cost items?	Current Working Estimate is based on historical contract awards. Assumptions related to prime/sub contractors have been made, but could be different in execution. At this phase of the project, the cost estimate seems to be sound based on the current scope of work, with few critical assumptions being made.	Moderate	Possible	2
CT-7	TAMIAMI TRAIL ALIGNMENT	• Lack confidence on critical cost items?	• Reliability and number of key quotes? • Assumptions related to prime and subcontractor markups/assignments? • Assumptions regarding crew, productivity, overtime? • Lack confidence on critical cost items?	Current Working Estimate is based on historical contract awards. Assumptions related to prime/sub contractors have been made, but could be different in execution. At this phase of the project, the cost estimate seems to be sound based on the current scope of work, with few critical assumptions being made.	Moderate	Possible	2
External Project Risks						**Maximum Project Growth**	**40%**

EX-1	BEACH REPLENISHMENT	• Potential for severe adverse weather?	• Potential for severe adverse weather? • Political influences, lack of support, obstacles? • Unanticipated inflations in fuel, key materials? • Potential for market volatility impacting competition, pricing?	Potential risk realted to unforseen severe or adverse weather due to the location of the revetments. At this phase of the project, there is also a concern for funding and/or support obstacles. Each site will have abnormally long haul routes due to how isolated they are, so any sudden increase in fuel, route closings, or availabilty of material could impact day to day routines during construction.	Moderate	Unlikely	1
EX-2	MARCO ISLAND REVETMENT	• Potential for severe adverse weather?	• Potential for severe adverse weather? • Political influences, lack of support, obstacles? • Unanticipated inflations in fuel, key materials? • Potential for market volatility impacting competition, pricing?	Potential risk realted to unforseen severe or adverse weather due to the location of the revetments. At this phase of the project, there is also a concern for funding and/or support obstacles. Each site will have abnormally long haul routes due to how isolated they are, so any sudden increase in fuel, route	Moderate	Unlikely	N/A
EX-3	BONITA BEACH ROAD ALIGNMENT	• Potential for severe adverse weather?	• Potential for severe adverse weather? • Political influences, lack of support, obstacles? • Unanticipated inflations in fuel, key materials? • Potential for market volatility impacting competition, pricing?	Potential risk realted to unforseen severe or adverse weather due to the location of the revetments. At this phase of the project, there is also a concern for funding and/or support obstacles. Each site will have abnormally long haul routes due to how isolated they are, so any sudden increase in fuel, route	Moderate	Unlikely	1
EX-4	SEAGATE DR. ALIGNMENT	• Potential for severe adverse weather?	• Potential for severe adverse weather? • Political influences, lack of support, obstacles? • Unanticipated inflations in fuel, key materials? • Potential for market volatility impacting competition, pricing?	Potential risk realted to unforseen severe or adverse weather due to the location of the revetments. At this phase of the project, there is also a concern for funding and/or support obstacles. Each site will have abnormally long haul routes due to how isolated they are, so any sudden increase in fuel, route	Moderate	Unlikely	1
EX-5	WIGGINS PASS ALIGNMENT	• Potential for severe adverse weather?	• Potential for severe adverse weather? • Political influences, lack of support, obstacles? • Unanticipated inflations in fuel, key materials? • Potential for market volatility impacting competition, pricing?	Potential risk realted to unforseen severe or adverse weather due to the location of the revetments. At this phase of the project, there is also a concern for funding and/or support obstacles. Each site will have abnormally long haul routes due to how isolated they are, so any sudden increase in fuel, route	Moderate	Unlikely	1
EX-6	DOCTOR'S PASS ALIGNMENT	• Potential for severe adverse weather?	• Potential for severe adverse weather? • Political influences, lack of support, obstacles? • Unanticipated inflations in fuel, key materials? • Potential for market volatility impacting competition, pricing?	Potential risk realted to unforseen severe or adverse weather due to the location of the revetments. At this phase of the project, there is also a concern for funding and/or support obstacles. Each site will have abnormally long haul routes due to how isolated they are, so any sudden increase in fuel, route	Moderate	Unlikely	1
EX-7	TAMIAMI TRAIL ALIGNMENT	• Potential for severe adverse weather?	• Potential for severe adverse weather? • Political influences, lack of support, obstacles? • Unanticipated inflations in fuel, key materials? • Potential for market volatility impacting competition, pricing?	Potential risk realted to unforseen severe or adverse weather due to the location of the revetments. At this phase of the project, there is also a concern for funding and/or support obstacles. Each site will have abnormally long haul routes due to how isolated they are, so any sudden increase in fuel, route	Moderate	Unlikely	1
EX-19	Construction Management	• Potential for severe adverse weather?	• Potential for severe adverse weather? • Political influences, lack of support, obstacles? • Unanticipated inflations in fuel, key materials?	Multiple items can affect the overall duration of construction, resulting in the duration of construction management increasing or decreasing.	Negligible	Unlikely	0

ATTACHMENT 3
Structural TPCS

****** TOTAL PROJECT COST SUMMARY ******

PROJECT: Collier County CSRM Feasibility Study
PROJECT NO: 476674
LOCATION: Collier County, Florida

DISTRICT: NAO Norfolk District
POC: CHIEF, COST ENGINEERING
PREPARED: 7/7/2020

This Estimate reflects the scope and schedule in report; TSP

Civil Works Work Breakdown Structure		ESTIMATED COST				PROJECT FIRST COST (Constant Dollar Basis)						TOTAL PROJECT COST (FULLY FUNDED)			
						Program Year (Budget EC): 2020 Effective Price Level Date: 1 OCT 19									
WBS NUMBER	Civil Works Feature & Sub-Feature Description	COST ($K)	CNTG ($K)	CNTG (%)	TOTAL ($K)	ESC (%)	COST ($K)	CNTG ($K)	**TOTAL ($K)**	Spent Thru: **7/1/2020** ($K)	**TOTAL FIRST COST** ($K)	ESC (%)	COST ($K)	CNTG ($K)	FULL ($K)
A	*B*	*C*	*D*	*E*	*F*	*G*	*H*	*I*	*J*				*M*	*N*	*O*
11	LEVEES & FLOODWALLS	$591,491	$177,447	30%	$768,938	0.0%	$591,491	$177,447	$768,938	$0	$768,938	35.4%	$800,640	$240,192	$1,040,833
18	CULTURAL RESOURCE PRESERVATION	$5,913	$1,774	30%	$7,687	0.0%	$5,913	$1,774	$7,687	$0	$7,687	35.4%	$8,004	$2,401	$10,405
		$0	$0 -		$0	-	$0	$0	$0	$0	$0	-	$0	$0	$0
		$0	$0 -		$0	-	$0	$0	$0	$0	$0	-	$0	$0	$0
	CONSTRUCTION ESTIMATE TOTALS:	$597,404	$179,221		$776,625	0.0%	$597,404	$179,221	$776,625	$0	$776,625	35.4%	$808,644	$242,593	$1,051,238
01	LANDS AND DAMAGES	$13,976	$4,193	30%	$18,169	0.0%	$13,976	$4,193	$18,169	$0	$18,169	27.6%	$17,832	$5,350	$23,181
30	PLANNING, ENGINEERING & DESIGN	$70,494	$21,148	30%	$91,642	0.0%	$70,494	$21,148	$91,642	$0	$91,642	32.6%	$93,501	$28,050	$121,552
31	CONSTRUCTION MANAGEMENT (S&A)	$59,740	$17,922	30%	$77,663	0.0%	$59,740	$17,740	$77,480	$0	$77,480	40.7%	$83,878	$25,163	$109,041
	PROJECT COST TOTALS:	$741,614	$222,484	30%	$964,098		$741,614	$222,302	**$963,916**	$0	**$963,916**	35.4%	$1,003,855	$301,157	$1,305,012

_____ CHIEF, COST ENGINEERING

_____ PROJECT MANAGER

_____ CHIEF, REAL ESTATE

_____ CHIEF, PLANNING

_____ CHIEF, ENGINEERING

_____ CHIEF, OPERATIONS

_____ CHIEF, CONSTRUCTION

_____ CHIEF, CONTRACTING

_____ CHIEF, PM-PB

_____ CHIEF, DPM

ESTIMATED FEDERAL COST:	**65%**	**$848,258**
ESTIMATED NON-FEDERAL COST:	**35%**	**$456,754**
ESTIMATED TOTAL PROJECT COST:		**$1,305,012**

****** TOTAL PROJECT COST SUMMARY ******

****** CONTRACT COST SUMMARY ******

PROJECT: Collier County CSRM Feasibility Study
LOCATION: Collier County, Florida
This Estimate reflects the scope and schedule in report; TSP

DISTRICT: NAO Norfolk District
POC: CHIEF, COST ENGINEERING

PREPARED: 7/7/2020

Civil Works Work Breakdown Structure		ESTIMATED COST				PROJECT FIRST COST (Constant Dollar Basis)				TOTAL PROJECT COST (FULLY FUNDED)				
		Estimate Prepared:			6/23/2020	Program Year (Budget EC):			2020					
		Effective Price Level:			10/1/2019	Effective Price Level Date:			1 OCT 19					
WBS NUMBER	Civil Works Feature & Sub-Feature Description	COST ($K)	CNTG ($K)	CNTG (%)	TOTAL ($K)	ESC (%)	COST ($K)	CNTG ($K)	TOTAL ($K)	Mid-Point Date	ESC (%)	COST ($K)	CNTG ($K)	FULL ($K)
A	*B*	*C*	*D*	*E*	*F*	*G*	*H*	*I*	*J*	*P*	*L*	*M*	*N*	*O*
	TSP - Wiggins Pass													
11	LEVEES & FLOODWALLS	$222,109	$66,633	30%	$288,742	0.0%	$222,109	$66,633	$288,742	2030Q2	35.4%	$300,646	$90,194	$390,840
18	CULTURAL RESOURCE PRESERVATION	$2,221	$666	30%	$2,887	0.0%	$2,221	$666	$2,887	2030Q2	35.4%	$3,006	$902	$3,908
	CONSTRUCTION ESTIMATE TOTALS:	$224,330	$67,299	30%	**$291,629**		$224,330	$67,299	$291,629			$303,652	$91,096	$394,748
01	LANDS AND DAMAGES	$430	$129	30%	$559	0.0%	$430	$129	$559	2028Q2	27.6%	$549	$165	$713
30	PLANNING, ENGINEERING & DESIGN	$26,471	$7,941	30%	$34,412		$26,471	$7,941	$34,412			$35,111	$10,533	
0.5%	Project Management	$1,122	$336	30%	$1,458	0.0%	$1,122	$336	$1,458	2025Q3	22.4%	$1,373	$412	$1,785
0.5%	Planning & Environmental Compliance	$1,122	$336	30%	$1,458	0.0%	$1,122	$336	$1,458	2025Q3	22.4%	$1,373	$412	$1,785
4.0%	Engineering & Design	$8,973	$2,692	30%	$11,665	0.0%	$8,973	$2,692	$11,665	2025Q3	22.4%	$10,984	$3,295	$14,280
1.0%	Reviews, ATRs, IEPRs, VE	$2,243	$673	30%	$2,916	0.0%	$2,243	$673	$2,916	2025Q3	22.4%	$2,746	$824	$3,570
0.3%	Life Cycle Updates (cost, schedule, risks)	$673	$202	30%	$875	0.0%	$673	$202	$875	2025Q3	22.4%	$824	$247	$1,071
0.2%	Contracting & Reprographics	$449	$135	30%	$583	0.0%	$449	$135	$583	2025Q3	22.4%	$549	$165	$714
4.0%	Engineering During Construction	$8,973	$2,692	30%	$11,665	0.0%	$8,973	$2,692	$11,665	2030Q2	46.5%	$13,150	$3,945	$17,094
1.0%	Planning During Construction	$2,243	$673	30%	$2,916	0.0%	$2,243	$673	$2,916	2030Q2	46.5%	$3,287	$986	$4,274
0.3%	Project Operations	$673	$202	30%	$875	0.0%	$673	$202	$875	2025Q3	22.4%	$824	$247	$1,071
31	CONSTRUCTION MANAGEMENT	$22,433	$6,730	30%	$29,163		$22,433	$6,730	$29,163			$32,874	$9,862	
8.0%	Construction Management	$17,946	$5,384	30%	$23,330	0.0%	$17,946	$5,384	$23,330	2030Q2	46.5%	$26,299	$7,890	$34,189
1.0%	Project Operation:	$2,243	$673	30%	$2,916	0.0%	$2,243	$673	$2,916	2030Q2	46.5%	$3,287	$986	$4,274
1.0%	Project Management	$2,243	$673	30%	$2,916	0.0%	$2,243	$673	$2,916	2030Q2	46.5%	$3,287	$986	$4,274
	CONTRACT COST TOTALS:	$273,664	$82,099		**$355,763**		$273,664	$82,099	$355,763			$372,186	$111,656	**$483,841**

****** TOTAL PROJECT COST SUMMARY ******

****** CONTRACT COST SUMMARY ******

PROJECT: Collier County CSRM Feasibility Study
LOCATION: Collier County, Florida
This Estimate reflects the scope and schedule in report; TSP

DISTRICT: NAO Norfolk District
POC: CHIEF, COST ENGINEERING

PREPARED: 7/7/2020

Estimate Prepared: **6/23/2020**
Effective Price Level: 10/1/2019

Program Year (Budget EC): 2020
Effective Price Level Date: 1 OCT 19

Civil Works Work Breakdown Structure		ESTIMATED COST				PROJECT FIRST COST (Constant Dollar Basis)				TOTAL PROJECT COST (FULLY FUNDED)				
WBS NUMBER	Civil Works Feature & Sub-Feature Description	COST ($K)	CNTG ($K)	RISK BASED CNTG (%)	TOTAL ($K)	ESC (%)	COST ($K)	CNTG ($K)	TOTAL ($K)	Mid-Point Date	ESC (%)	COST ($K)	CNTG ($K)	FULL ($K)
A	*B*	*C*	*D*	*E*	*F*	*G*	*H*	*I*	*J*	*P*	*L*	*M*	*N*	*O*
	TSP - Seagate Drive													
11	LEVEES & FLOODWALLS	$32,409	$9,723	30%	$42,132	0.0%	$32,409	$9,723	$42,132	2030Q2	35.4%	$43,869	$13,161	$57,029
18	CULTURAL RESOURCE PRESERVATION	$324	$97	30%	$421	0.0%	$324	$97	$421	2030Q2	35.4%	$439	$132	$570
	CONSTRUCTION ESTIMATE TOTALS:	$32,733	$9,820	30%	**$42,553**		$32,733	$9,820	$42,553			$44,307	$13,292	$57,599
01	LANDS AND DAMAGES	$1,652	$496	30%	$2,148	0.0%	$1,652	$496	$2,148	2028Q2	27.6%	$2,108	$632	$2,740
30	PLANNING, ENGINEERING & DESIGN	$3,862	$1,159	30%	$5,021		$3,862	$1,159	$5,021			$5,123	$1,537	
0.5%	Project Management	$164	$49	30%	$213	0.0%	$164	$49	$213	2025Q3	22.4%	$200	$60	$260
0.5%	Planning & Environmental Compliance	$164	$49	30%	$213	0.0%	$164	$49	$213	2025Q3	22.4%	$200	$60	$260
4.0%	Engineering & Design	$1,309	$393	30%	$1,702	0.0%	$1,309	$393	$1,702	2025Q3	22.4%	$1,603	$481	$2,084
1.0%	Reviews, ATRs, IEPRs, VE	$327	$98	30%	$426	0.0%	$327	$98	$426	2025Q3	22.4%	$401	$120	$521
0.3%	Life Cycle Updates (cost, schedule, risks)	$98	$29	30%	$128	0.0%	$98	$29	$128	2025Q3	22.4%	$120	$36	$156
0.2%	Contracting & Reprographics	$65	$20	30%	$85	0.0%	$65	$20	$85	2025Q3	22.4%	$80	$24	$104
4.0%	Engineering During Construction	$1,309	$393	30%	$1,702	0.0%	$1,309	$393	$1,702	2030Q2	46.5%	$1,919	$576	$2,494
1.0%	Planning During Construction	$327	$98	30%	$426	0.0%	$327	$98	$426	2030Q2	46.5%	$480	$144	$624
0.3%	Project Operations	$98	$29	30%	$128	0.0%	$98	$29	$128	2025Q3	22.4%	$120	$36	$156
31	CONSTRUCTION MANAGEMENT	$3,273	$982	30%	$4,255		$3,273	$982	$4,255			$4,797	$1,439	
8.0%	Construction Management	$2,619	$786	30%	$3,404	0.0%	$2,619	$786	$3,404	2030Q2	46.5%	$3,837	$1,151	$4,989
1.0%	Project Operation:	$327	$98	30%	$426	0.0%	$327	$98	$426	2030Q2	46.5%	$480	$144	$624
1.0%	Project Management	$327	$98	30%	$426	0.0%	$327	$98	$426	2030Q2	46.5%	$480	$144	$624
	CONTRACT COST TOTALS:	$41,521	$12,456		**$53,977**		$41,521	$12,456	$53,977			$56,335	$16,901	**$73,236**

****** TOTAL PROJECT COST SUMMARY ******

****** CONTRACT COST SUMMARY ******

PROJECT: Collier County CSRM Feasibility Study
LOCATION: Collier County, Florida
This Estimate reflects the scope and schedule in report; TSP

DISTRICT: NAO Norfolk District
POC: CHIEF, COST ENGINEERING

PREPARED: 7/7/2020

Civil Works Work Breakdown Structure		ESTIMATED COST				PROJECT FIRST COST (Constant Dollar Basis)				TOTAL PROJECT COST (FULLY FUNDED)				
		Estimate Prepared: 6/23/2020 Effective Price Level: 10/1/2019				Program Year (Budget EC): 2020 Effective Price Level Date: 1 OCT 19								
WBS NUMBER	Civil Works Feature & Sub-Feature Description	COST ($K)	CNTG ($K)	CNTG (%)	TOTAL ($K)	ESC (%)	COST ($K)	CNTG ($K)	TOTAL ($K)	Mid-Point Date	ESC (%)	COST ($K)	CNTG ($K)	FULL ($K)
A	*B*	*C*	*D*	*E*	*F*	*G*	*H*	*I*	*J*	*P*	*L*	*M*	*N*	*O*
	TSP - Doctor's Pass													
11	LEVEES & FLOODWALLS	$37,473	$11,242	30%	$48,715	0.0%	$37,473	$11,242	$48,715	2030Q2	35.4%	$50,723	$15,217	$65,940
18	CULTURAL RESOURCE PRESERVATION	$374	$112	30%	$486	0.0%	$374	$112	$486	2030Q2	35.4%	$506	$152	$658
							$0							
	CONSTRUCTION ESTIMATE TOTALS:	$37,847	$11,354	30%	**$49,201**		$37,847	$11,354	$49,201			$51,230	$15,369	$66,598
01	LANDS AND DAMAGES	$262	$79	30%	$341	0.0%	$262	$79	$341	2028Q2	27.6%	$334	$100	$435
30	PLANNING, ENGINEERING & DESIGN	$4,466	$1,340	30%	$5,806		$4,466	$1,340	$5,806			$5,924	$1,777	
0.5%	Project Management	$189	$57	30%	$246	0.0%	$189	$57	$246	2025Q3	22.4%	$232	$69	$301
0.5%	Planning & Environmental Compliance	$189	$57	30%	$246	0.0%	$189	$57	$246	2025Q3	22.4%	$232	$69	$301
4.0%	Engineering & Design	$1,514	$454	30%	$1,968	0.0%	$1,514	$454	$1,968	2025Q3	22.4%	$1,853	$556	$2,409
1.0%	Reviews, ATRs, IEPRs, VE	$378	$114	30%	$492	0.0%	$378	$114	$492	2025Q3	22.4%	$463	$139	$602
0.3%	Life Cycle Updates (cost, schedule, risks)	$114	$34	30%	$148	0.0%	$114	$34	$148	2025Q3	22.4%	$139	$42	$181
0.2%	Contracting & Reprographics	$76	$23	30%	$98	0.0%	$76	$23	$98	2025Q3	22.4%	$93	$28	$120
4.0%	Engineering During Construction	$1,514	$454	30%	$1,968	0.0%	$1,514	$454	$1,968	2030Q2	46.5%	$2,218	$666	$2,884
1.0%	Planning During Construction	$378	$114	30%	$492	0.0%	$378	$114	$492	2030Q2	46.5%	$555	$166	$721
0.3%	Project Operations	$114	$34	30%	$148	0.0%	$114	$34	$148	2025Q3	22.4%	$139	$42	$181
31	CONSTRUCTION MANAGEMENT	$3,785	$1,135	30%	$4,920		$3,785	$1,135	$4,920			$5,546	$1,664	
8.0%	Construction Management	$3,028	$908	30%	$3,936	0.0%	$3,028	$908	$3,936	2030Q2	46.5%	$4,437	$1,331	$5,768
1.0%	Project Operation:	$378	$114	30%	$492	0.0%	$378	$114	$492	2030Q2	46.5%	$555	$166	$721
1.0%	Project Management	$378	$114	30%	$492	0.0%	$378	$114	$492	2030Q2	46.5%	$555	$166	$721
	CONTRACT COST TOTALS:	$46,360	$13,908		**$60,268**		$46,360	$13,908	$60,268			$63,034	$18,910	**$81,944**

****** TOTAL PROJECT COST SUMMARY ******

****** CONTRACT COST SUMMARY ******

PROJECT: Collier County CSRM Feasibility Study
LOCATION: Collier County, Florida
This Estimate reflects the scope and schedule in report; TSP

DISTRICT: NAO Norfolk District
POC: CHIEF, COST ENGINEERING

PREPARED: 7/7/2020

Civil Works Work Breakdown Structure		ESTIMATED COST				PROJECT FIRST COST (Constant Dollar Basis)				TOTAL PROJECT COST (FULLY FUNDED)				
		Estimate Prepared:			**6/23/2020**	Program Year (Budget EC):			2020					
		Effective Price Level:			10/1/2019	Effective Price Level Date:			1 OCT 19					
WBS NUMBER	Civil Works Feature & Sub-Feature Description	COST ($K)	CNTG ($K)	CNTG (%)	TOTAL ($K)	ESC (%)	COST ($K)	CNTG ($K)	TOTAL ($K)	Mid-Point Date	ESC (%)	COST ($K)	CNTG ($K)	FULL ($K)
A	*B*	*C*	*D*	*E*	*F*	*G*	*H*	*I*	*J*	*P*	*L*	*M*	*N*	*O*
	TSP - Tamiami Trail													
11	LEVEES & FLOODWALLS	$234,391	$70,317	30%	$304,708	0.0%	$234,391	$70,317	$304,708	2030Q2	35.4%	$317,271	$95,181	$412,452
18	CULTURAL RESOURCE PRESERVATION	$2,343	$703	30%	$3,046	0.0%	$2,343	$703	$3,046	2030Q2	35.4%	$3,171	$951	$4,123
	CONSTRUCTION ESTIMATE TOTALS:	$236,734	$71,020	30%	**$307,754**		$236,734	$71,020	$307,754			$320,442	$96,133	$416,575
01	LANDS AND DAMAGES	$11,630	$3,489	30%	$15,119	0.0%	$11,630	$3,489	$15,119	2028Q2	27.6%	$14,839	$4,452	$19,290
30	PLANNING, ENGINEERING & DESIGN	$27,935	$8,380	30%	$36,315		$27,935	$8,380	$36,315			$37,052	$11,116	$48,168
0.5%	Project Management	$1,184	$355	30%	$1,539	0.0%	$1,184	$355	$1,539	2025Q3	22.4%	$1,449	$435	$1,884
0.5%	Planning & Environmental Compliance	$1,184	$355	30%	$1,539	0.0%	$1,184	$355	$1,539	2025Q3	22.4%	$1,449	$435	$1,884
4.0%	Engineering & Design	$9,469	$2,841	30%	$12,310	0.0%	$9,469	$2,841	$12,310	2025Q3	22.4%	$11,592	$3,478	$15,069
1.0%	Reviews, ATRs, IEPRs, VE	$2,367	$710	30%	$3,078	0.0%	$2,367	$710	$3,078	2025Q3	22.4%	$2,898	$869	$3,767
0.3%	Life Cycle Updates (cost, schedule, risks)	$710	$213	30%	$923	0.0%	$710	$213	$923	2025Q3	22.4%	$869	$261	$1,130
0.2%	Contracting & Reprographics	$473	$142	30%	$616	0.0%	$473	$142	$616	2025Q3	22.4%	$580	$174	$753
4.0%	Engineering During Construction	$9,469	$2,841	30%	$12,310	0.0%	$9,469	$2,841	$12,310	2030Q2	46.5%	$13,877	$4,163	$18,040
1.0%	Planning During Construction	$2,367	$710	30%	$3,078	0.0%	$2,367	$710	$3,078	2030Q2	46.5%	$3,469	$1,041	$4,510
0.3%	Project Operations	$710	$213	30%	$923	0.0%	$710	$213	$923	2025Q3	22.4%	$869	$261	$1,130
31	CONSTRUCTION MANAGEMENT	$23,673	$7,102	30%	$30,775		$23,673	$7,102	$30,775			$34,692	$10,408	$45,099
8.0%	Construction Management	$18,939	$5,682	30%	$24,620	0.0%	$18,939	$5,682	$24,620	2030Q2	46.5%	$27,753	$8,326	$36,079
1.0%	Project Operation:	$2,367	$710	30%	$3,078	0.0%	$2,367	$710	$3,078	2030Q2	46.5%	$3,469	$1,041	$4,510
1.0%	Project Management	$2,367	$710	30%	$3,078	0.0%	$2,367	$710	$3,078	2030Q2	46.5%	$3,469	$1,041	$4,510
	CONTRACT COST TOTALS:	$299,972	$89,992		**$389,964**		$299,972	$89,992	$389,964			$407,025	$122,107	**$529,132**

****** TOTAL PROJECT COST SUMMARY ******

****** CONTRACT COST SUMMARY ******

PROJECT: Collier County CSRM Feasibility Study
LOCATION: Collier County, Florida
This Estimate reflects the scope and schedule in report; TSP

DISTRICT: NAO Norfolk District
POC: CHIEF, COST ENGINEERING

PREPARED: 7/7/2020

Civil Works Work Breakdown Structure		ESTIMATED COST				PROJECT FIRST COST (Constant Dollar Basis)				TOTAL PROJECT COST (FULLY FUNDED)				
		Estimate Prepared: 6/23/2020 Effective Price Level: 10/1/2019				Program Year (Budget EC): 2020 Effective Price Level Date: 1 OCT 19				FULLY FUNDED PROJECT ESTIMATE				
WBS NUMBER	Civil Works Feature & Sub-Feature Description	COST ($K)	CNTG ($K)	CNTG (%)	TOTAL ($K)	ESC (%)	COST ($K)	CNTG ($K)	TOTAL ($K)	Mid-Point Date	ESC (%)	COST ($K)	CNTG ($K)	FULL ($K)
A	*B*	*C*	*D*	*E*	*F*	*G*	*H*	*I*	*J*	*P*	*L*	*M*	*N*	*O*
	TSP - Bonita Beach Road													
11	LEVEES & FLOODWALLS	$65,109	$19,533	30%	$84,642	0.0%	$65,109	$19,533	$84,642	2030Q2	35.4%	$88,131	$26,439	$114,571
18	CULTURAL RESOURCE PRESERVATION	$651	$195	30%	$846	0.0%	$651	$195	$846	2030Q2	35.4%	$881	$264	$1,146
	CONSTRUCTION ESTIMATE TOTALS:	$65,760	$19,728	30%	**$85,488**		$65,760	$19,728	$85,488			$89,013	$26,704	$115,716
01	LANDS AND DAMAGES	$2	$1	30%	$3	0.0%	$2	$1	$3	2028Q2	27.6%	$3	$1	$3
30	PLANNING, ENGINEERING & DESIGN	$7,760	$2,328	30%	$10,088		$7,760	$2,328	$10,088			$10,292	$3,088	
0.5%	Project Management	$329	$99	30%	$427	0.0%	$329	$99	$427	2025Q3	22.4%	$402	$121	$523
0.5%	Planning & Environmental Compliance	$329	$99	30%	$427	0.0%	$329	$99	$427	2025Q3	22.4%	$402	$121	$523
4.0%	Engineering & Design	$2,630	$789	30%	$3,420	0.0%	$2,630	$789	$3,420	2025Q3	22.4%	$3,220	$966	$4,186
1.0%	Reviews, ATRs, IEPRs, VE	$658	$197	30%	$855	0.0%	$658	$197	$855	2025Q3	22.4%	$805	$241	$1,046
0.3%	Life Cycle Updates (cost, schedule, risks)	$197	$59	30%	$256	0.0%	$197	$59	$256	2025Q3	22.4%	$241	$72	$314
0.2%	Contracting & Reprographics	$132	$39	30%	$171	0.0%	$132	$39	$171	2025Q3	22.4%	$161	$48	$209
4.0%	Engineering During Construction	$2,630	$789	30%	$3,420	0.0%	$2,630	$789	$3,420	2030Q2	46.5%	$3,855	$1,156	$5,011
1.0%	Planning During Construction	$658	$197	30%	$855	0.0%	$658	$197	$855	2030Q2	46.5%	$964	$289	$1,253
0.3%	Project Operations	$197	$59	30%	$256	0.0%	$197	$59	$256	2025Q3	22.4%	$241	$72	$314
31	CONSTRUCTION MANAGEMENT	$6,576	$1,973	30%	$8,549		$5,969	$1,791	$7,760			$5,969	$1,791	
8.0%	Construction Management	$5,261	$1,578	30%	$6,839	-9.2%	$4,775	$1,433	$6,208	2017Q1	0.0%	$4,775	$1,433	$6,208
1.0%	Project Operation:	$658	$197	30%	$855	-9.2%	$597	$179	$776	2030Q2	0.0%	$597	$179	$776
1.0%	Project Management	$658	$197	30%	$855	-9.2%	$597	$179	$776	2030Q2	0.0%	$597	$179	$776
	CONTRACT COST TOTALS:	$80,098	$24,029		**$104,127**		$79,491	$23,847	$103,338			$105,276	$31,583	**$136,859**

ATTACHMENT 4
Non-Structural TPCS

**** TOTAL PROJECT COST SUMMARY ****

PROJECT: Collier County CSRM Feasibility Study - NonStructural
PROJECT NO: 476677
LOCATION: Collier County - Miami, Florida

DISTRICT: NAO Norfolk District
POC: CHIEF, COST ENGINEERING
PREPARED: 7/16/2020

This Estimate reflects the scope and schedule in report; TSP

Civil Works Work Breakdown Structure		ESTIMATED COST				PROJECT FIRST COST (Constant Dollar Basis)						TOTAL PROJECT COST (FULLY FUNDED)			
						Program Year (Budget EC): 2020 Effective Price Level Date: 1 OCT 19									
WBS NUMBER	Civil Works Feature & Sub-Feature Description	COST ($K)	CNTG ($K)	CNTG (%)	TOTAL ($K)	ESC (%)	COST ($K)	CNTG ($K)	TOTAL ($K)	Spent Thru: 7/1/2020 ($K)	TOTAL FIRST COST ($K)	ESC (%)	COST ($K)	CNTG ($K)	FULL ($K)
A	*B*	*C*	*D*	*E*	*F*	*G*	*H*	*I*	*J*				*M*	*N*	*O*
02	RELOCATIONS	$569,221	$193,535	34%	$762,756	0.0%	$569,221	$193,535	$762,756	$0	$762,756	35.8%	$772,909	$262,789	$1,035,698
		$0	$0 -		$0	-	$0	$0	$0	$0	$0	-	$0	$0	$0
		$0	$0 -		$0	-	$0	$0	$0	$0	$0	-	$0	$0	$0
		$0	$0 -		$0	-	$0	$0	$0	$0	$0	-	$0	$0	$0
	CONSTRUCTION ESTIMATE TOTALS:	$569,221	$193,535		$762,756	0.0%	$569,221	$193,535	$762,756	$0	$762,756	35.8%	$772,909	$262,789	$1,035,698
01	LANDS AND DAMAGES	$27,218	$9,254	34%	$36,472	0.0%	$27,218	$9,254	$36,472	$0	$36,472	17.6%	$32,020	$10,887	$42,906
30	PLANNING, ENGINEERING & DESIGN	$67,168	$22,837	34%	$90,005	0.0%	$67,168	$22,837	$90,005	$0	$90,005	29.8%	$87,177	$29,640	$116,817
31	CONSTRUCTION MANAGEMENT (S&A)	$56,922	$19,354	34%	$76,276	0.0%	$56,922	$19,354	$76,276	$0	$76,276	46.8%	$83,561	$28,411	$111,972
	PROJECT COST TOTALS:	$720,529	$244,980	34%	$965,509		$720,529	$244,980	**$965,509**	$0	**$965,509**	35.4%	$975,667	$331,727	$1,307,393

ESTIMATED FEDERAL COST:	**65%**	**$849,806**
ESTIMATED NON-FEDERAL COST:	**35%**	**$457,588**
ESTIMATED TOTAL PROJECT COST:		**$1,307,393**

CHIEF, COST ENGINEERING

PROJECT MANAGER

CHIEF, REAL ESTATE

CHIEF, PLANNING

CHIEF, ENGINEERING

CHIEF, OPERATIONS

CHIEF, CONSTRUCTION

CHIEF, CONTRACTING

CHIEF, PM-PB

CHIEF, DPM

****** TOTAL PROJECT COST SUMMARY ******

****** CONTRACT COST SUMMARY ******

PROJECT: Collier County CSRM Feasibility Study - NonStructural
LOCATION: Collier County - Miami, Florida
This Estimate reflects the scope and schedule in report; TSP

DISTRICT: NAO Norfolk District
POC: CHIEF, COST ENGINEERING

PREPARED: 7/16/2020

Estimate Prepared: **6/23/2020**
Effective Price Level: 10/1/2019

Program Year (Budget EC): 2020
Effective Price Level Date: 1 OCT 19

Civil Works Work Breakdown Structure		ESTIMATED COST				PROJECT FIRST COST (Constant Dollar Basis)				TOTAL PROJECT COST (FULLY FUNDED)				
WBS NUMBER	Civil Works Feature & Sub-Feature Description	COST ($K)	CNTG ($K)	CNTG (%)	TOTAL ($K)	ESC (%)	COST ($K)	CNTG ($K)	TOTAL ($K)	Mid-Point Date	ESC (%)	COST ($K)	CNTG ($K)	FULL ($K)
A	*B*	*C*	*D*	*E*	*F*	*G*	*H*	*I*	*J*	*P*	*L*	*M*	*N*	*O*
	TSP - Acquisition													
02	RELOCATIONS	$22,274	$7,573	34%	$29,847	0.0%	$22,274	$7,573	$29,847	2026Q3	21.2%	$26,990	$9,176	$36,166
	CONSTRUCTION ESTIMATE TOTALS:	$22,274	$7,573	34%	**$29,847**		$22,274	$7,573	$29,847			$26,990	$9,176	$36,166
01	LANDS AND DAMAGES	$27,218	$9,254	34%	$36,472	0.0%	$27,218	$9,254	$36,472	2025Q3	17.6%	$32,020	$10,887	$42,906
30	PLANNING, ENGINEERING & DESIGN	$2,628	$894	34%	$3,522		$2,628	$894	$3,522			$3,102	$1,055	
0.5%	Project Management	$111	$38	34%	$149	0.0%	$111	$38	$149	2024Q3	18.0%	$131	$45	$176
0.5%	Planning & Environmental Compliance	$111	$38	34%	$149	0.0%	$111	$38	$149	2024Q3	18.0%	$131	$45	$176
4.0%	Engineering & Design	$891	$303	34%	$1,194	0.0%	$891	$303	$1,194	2024Q3	18.0%	$1,051	$358	$1,409
1.0%	Reviews, ATRs, IEPRs, VE	$223	$76	34%	$298	0.0%	$223	$76	$298	2024Q3	18.0%	$263	$89	$352
0.3%	Life Cycle Updates (cost, schedule, risks)	$67	$23	34%	$90	0.0%	$67	$23	$90	2024Q3	18.0%	$79	$27	$106
0.2%	Contracting & Reprographics	$45	$15	34%	$60	0.0%	$45	$15	$60	2024Q3	18.0%	$53	$18	$70
4.0%	Engineering During Construction	$891	$303	34%	$1,194	0.0%	$891	$303	$1,194	2024Q3	18.0%	$1,051	$358	$1,409
1.0%	Planning During Construction	$223	$76	34%	$298	0.0%	$223	$76	$298	2024Q3	18.0%	$263	$89	$352
0.3%	Project Operations	$67	$23	34%	$90	0.0%	$67	$23	$90	2024Q3	18.0%	$79	$27	$106
31	CONSTRUCTION MANAGEMENT	$2,227	$757	34%	$2,985		$2,227	$757	$2,985			$2,629	$894	
8.0%	Construction Management	$1,782	$606	34%	$2,388	0.0%	$1,782	$606	$2,388	2024Q3	18.0%	$2,103	$715	$2,818
1.0%	Project Operation:	$223	$76	34%	$298	0.0%	$223	$76	$298	2024Q3	18.0%	$263	$89	$352
1.0%	Project Management	$223	$76	34%	$298	0.0%	$223	$76	$298	2024Q3	18.0%	$263	$89	$352
	CONTRACT COST TOTALS:	$54,348	$18,478		**$72,826**		$54,348	$18,478	$72,826			$64,740	$22,012	**$86,751**

****** TOTAL PROJECT COST SUMMARY ******

****** CONTRACT COST SUMMARY ******

PROJECT: Collier County CSRM Feasibility Study - NonStructural
LOCATION: Collier County - Miami, Florida
This Estimate reflects the scope and schedule in report; TSP

DISTRICT: NAO Norfolk District
POC: CHIEF, COST ENGINEERING

PREPARED: 7/16/2020

Estimate Prepared: **6/23/2020**
Effective Price Level: 10/1/2019

Program Year (Budget EC): 2020
Effective Price Level Date: 1 OCT 19

Civil Works Work Breakdown Structure		ESTIMATED COST				PROJECT FIRST COST (Constant Dollar Basis)				TOTAL PROJECT COST (FULLY FUNDED)				
WBS NUMBER	Civil Works Feature & Sub-Feature Description	COST ($K)	CNTG ($K)	RISK BASED CNTG (%)	TOTAL ($K)	ESC (%)	COST ($K)	CNTG ($K)	TOTAL ($K)	Mid-Point Date	ESC (%)	COST ($K)	CNTG ($K)	FULL ($K)
A	*B*	*C*	*D*	*E*	*F*	*G*	*H*	*I*	*J*	*P*	*L*	*M*	*N*	*O*
	TSP - Elevation													
02	RELOCATIONS	$447,404	$152,117	34%	$599,521	0.0%	$447,404	$152,117	$599,521	2030Q3	36.4%	$610,164	$207,456	$817,620
	CONSTRUCTION ESTIMATE TOTALS:	$447,404	$152,117	34%	**$599,521**		$447,404	$152,117	$599,521			$610,164	$207,456	$817,620
01	LANDS AND DAMAGES	$0	$0	34%	$0	0.0%	$0	$0	$0	0	0.0%	$0	$0	$0
30	PLANNING, ENGINEERING & DESIGN	$52,794	$17,950	34%	$70,744		$52,794	$17,950	$70,744			$69,006	$23,462	
0.5%	Project Management	$2,237	$761	34%	$2,998	0.0%	$2,237	$761	$2,998	2024Q3	18.0%	$2,640	$898	$3,538
0.5%	Planning & Environmental Compliance	$2,237	$761	34%	$2,998	0.0%	$2,237	$761	$2,998	2024Q3	18.0%	$2,640	$898	$3,538
4.0%	Engineering & Design	$17,896	$6,085	34%	$23,981	0.0%	$17,896	$6,085	$23,981	2024Q3	18.0%	$21,120	$7,181	$28,301
1.0%	Reviews, ATRs, IEPRs, VE	$4,474	$1,521	34%	$5,995	0.0%	$4,474	$1,521	$5,995	2024Q3	18.0%	$5,280	$1,795	$7,075
0.3%	Life Cycle Updates (cost, schedule, risks)	$1,342	$456	34%	$1,799	0.0%	$1,342	$456	$1,799	2024Q3	18.0%	$1,584	$539	$2,123
0.2%	Contracting & Reprographics	$895	$304	34%	$1,199	0.0%	$895	$304	$1,199	2024Q3	18.0%	$1,056	$359	$1,415
4.0%	Engineering During Construction	$17,896	$6,085	34%	$23,981	0.0%	$17,896	$6,085	$23,981	2030Q3	48.0%	$26,481	$9,004	$35,485
1.0%	Planning During Construction	$4,474	$1,521	34%	$5,995	0.0%	$4,474	$1,521	$5,995	2030Q3	48.0%	$6,620	$2,251	$8,871
0.3%	Project Operations	$1,342	$456	34%	$1,799	0.0%	$1,342	$456	$1,799	2024Q3	18.0%	$1,584	$539	$2,123
31	CONSTRUCTION MANAGEMENT	$44,740	$15,212	34%	$59,952		$44,740	$15,212	$59,952			$66,203	$22,509	
8.0%	Construction Management	$35,792	$12,169	34%	$47,962	0.0%	$35,792	$12,169	$47,962	2030Q3	48.0%	$52,963	$18,007	$70,970
1.0%	Project Operation:	$4,474	$1,521	34%	$5,995	0.0%	$4,474	$1,521	$5,995	2030Q3	48.0%	$6,620	$2,251	$8,871
1.0%	Project Management	$4,474	$1,521	34%	$5,995	0.0%	$4,474	$1,521	$5,995	2030Q3	48.0%	$6,620	$2,251	$8,871
	CONTRACT COST TOTALS:	$544,938	$185,279		**$730,217**		$544,938	$185,279	$730,217			$745,374	$253,427	**$998,801**

****** TOTAL PROJECT COST SUMMARY ******

****** CONTRACT COST SUMMARY ******

PROJECT: Collier County CSRM Feasibility Study - NonStructural
LOCATION: Collier County - Miami, Florida
This Estimate reflects the scope and schedule in report; TSP

DISTRICT: NAO Norfolk District
POC: CHIEF, COST ENGINEERING

PREPARED: 7/16/2020

Estimate Prepared: **6/23/2020**
Effective Price Level: 10/1/2019

Program Year (Budget EC): 2020
Effective Price Level Date: 1 OCT 19

Civil Works Work Breakdown Structure		ESTIMATED COST				PROJECT FIRST COST (Constant Dollar Basis)				TOTAL PROJECT COST (FULLY FUNDED)				
WBS NUMBER	Civil Works Feature & Sub-Feature Description	COST ($K)	CNTG ($K)	CNTG (%)	TOTAL ($K)	ESC (%)	COST ($K)	CNTG ($K)	TOTAL ($K)	Mid-Point Date	ESC (%)	COST ($K)	CNTG ($K)	FULL ($K)
A	*B*	*C*	*D*	*E*	*F*	*G*	*H*	*I*	*J*	*P*	*L*	*M*	*N*	*O*
	TSP - Floodproofing													
02	RELOCATIONS	$99,543	$33,845	34%	$133,388	0.0%	$99,543	$33,845	$133,388	2030Q3	36.4%	$135,755	$46,157	$181,912
							$0							
	CONSTRUCTION ESTIMATE TOTALS:	$99,543	$33,845	34%	**$133,388**		$99,543	$33,845	$133,388			$135,755	$46,157	$181,912
01	LANDS AND DAMAGES	$0	$0	34%	$0	0.0%	$0	$0	$0	0	0.0%	$0	$0	$0
30	PLANNING, ENGINEERING & DESIGN	$11,746	$3,994	34%	$15,740		$11,746	$3,994	$15,740			$15,068	$5,123	
0.5%	Project Management	$498	$169	34%	$667	0.0%	$498	$169	$667	2023Q3	13.8%	$566	$193	$759
0.5%	Planning & Environmental Compliance	$498	$169	34%	$667	0.0%	$498	$169	$667	2023Q3	13.8%	$566	$193	$759
4.0%	Engineering & Design	$3,982	$1,354	34%	$5,336	0.0%	$3,982	$1,354	$5,336	2023Q3	13.8%	$4,531	$1,541	$6,072
1.0%	Reviews, ATRs, IEPRs, VE	$995	$338	34%	$1,334	0.0%	$995	$338	$1,334	2023Q3	13.8%	$1,133	$385	$1,518
0.3%	Life Cycle Updates (cost, schedule, risks)	$299	$102	34%	$400	0.0%	$299	$102	$400	2023Q3	13.8%	$340	$116	$455
0.2%	Contracting & Reprographics	$199	$68	34%	$267	0.0%	$199	$68	$267	2023Q3	13.8%	$227	$77	$304
4.0%	Engineering During Construction	$3,982	$1,354	34%	$5,336	0.0%	$3,982	$1,354	$5,336	2030Q3	48.0%	$5,892	$2,003	$7,895
1.0%	Planning During Construction	$995	$338	34%	$1,334	0.0%	$995	$338	$1,334	2030Q3	48.0%	$1,473	$501	$1,974
0.3%	Project Operations	$299	$102	34%	$400	0.0%	$299	$102	$400	2023Q3	13.8%	$340	$116	$455
31	CONSTRUCTION MANAGEMENT	$9,954	$3,384	34%	$13,339		$9,954	$3,384	$13,339			$14,730	$5,008	
8.0%	Construction Management	$7,963	$2,708	34%	$10,671	0.0%	$7,963	$2,708	$10,671	2030Q3	48.0%	$11,784	$4,006	$15,790
1.0%	Project Operation:	$995	$338	34%	$1,334	0.0%	$995	$338	$1,334	2030Q3	48.0%	$1,473	$501	$1,974
1.0%	Project Management	$995	$338	34%	$1,334	0.0%	$995	$338	$1,334	2030Q3	48.0%	$1,473	$501	$1,974
	CONTRACT COST TOTALS:	$121,243	$41,223		**$162,466**		$121,243	$41,223	$162,466			$165,553	$56,288	**$221,841**

ATTACHMENT 5
Beach Nourishment TPCS

**** TOTAL PROJECT COST SUMMARY ****

PROJECT: Collier County CSRM Feasibility Study
PROJECT NO: 476674
LOCATION: Collier County, Florida

DISTRICT: NAO Norfolk District
POC: CHIEF, COST ENGINEERING
PREPARED: 7/7/2020

This Estimate reflects the scope and schedule in report; TSP

Civil Works Work Breakdown Structure		ESTIMATED COST				PROJECT FIRST COST (Constant Dollar Basis)						TOTAL PROJECT COST (FULLY FUNDED)			
						Program Year (Budget EC): 2020 Effective Price Level Date: 1 OCT 19									
WBS NUMBER	Civil Works Feature & Sub-Feature Description	COST ($K)	CNTG ($K)	CNTG (%)	TOTAL ($K)	ESC (%)	COST ($K)	CNTG ($K)	**TOTAL ($K)**	Spent Thru: **7/1/2020** ($K)	**TOTAL FIRST COST** ($K)	ESC (%)	COST ($K)	CNTG ($K)	FULL ($K)
A	*B*	*C*	*D*	*E*	*F*	*G*	*H*	*I*	*J*				*M*	*N*	*O*
17	BEACH REPLENISHMENT	$633,778	$190,133	30%	$823,911	0.0%	$633,778	$190,133	$823,911	$0	$823,911	35.4%	$857,880	$257,364	$1,115,244
		$0	$0 -		$0	-	$0	$0	$0	$0	$0	-	$0	$0	$0
		$0	$0 -		$0	-	$0	$0	$0	$0	$0	-	$0	$0	$0
		$0	$0 -		$0	-	$0	$0	$0	$0	$0	-	$0	$0	$0
	CONSTRUCTION ESTIMATE TOTALS:	$633,778	$190,133		$823,911	0.0%	$633,778	$190,133	$823,911	$0	$823,911	35.4%	$857,880	$257,364	$1,115,244
01	LANDS AND DAMAGES	$72,108	$21,632	30%	$93,740	0.0%	$72,108	$21,632	$93,740	$0	$93,740	27.6%	$92,002	$27,601	$119,603
30	PLANNING, ENGINEERING & DESIGN	$74,786	$22,436	30%	$97,222	0.0%	$74,786	$22,436	$97,222	$0	$97,222	32.6%	$99,194	$29,758	$128,953
31	CONSTRUCTION MANAGEMENT (S&A)	$63,378	$19,013	30%	$82,391	0.0%	$63,378	$19,013	$82,391	$0	$82,391	46.5%	$92,876	$27,863	$120,739
	PROJECT COST TOTALS:	$844,050	$253,215	30%	$1,097,264		$844,050	$253,215	**$1,097,264**	$0	**$1,097,264**	35.3%	$1,141,953	$342,586	$1,484,538

_____ CHIEF, COST ENGINEERING

_____ PROJECT MANAGER

_____ CHIEF, REAL ESTATE

_____ CHIEF, PLANNING

_____ CHIEF, ENGINEERING

_____ CHIEF, OPERATIONS

_____ CHIEF, CONSTRUCTION

_____ CHIEF, CONTRACTING

_____ CHIEF, PM-PB

_____ CHIEF, DPM

ESTIMATED FEDERAL COST:	**65%**	**$964,950**
ESTIMATED NON-FEDERAL COST:	**35%**	**$519,588**
ESTIMATED TOTAL PROJECT COST:		**$1,484,538**

****** TOTAL PROJECT COST SUMMARY ******

****** CONTRACT COST SUMMARY ******

PROJECT: Collier County CSRM Feasibility Study
LOCATION: Collier County, Florida
This Estimate reflects the scope and schedule in report; TSP

DISTRICT: NAO Norfolk District
POC: CHIEF, COST ENGINEERING

PREPARED: 7/7/2020

Civil Works Work Breakdown Structure		ESTIMATED COST				PROJECT FIRST COST (Constant Dollar Basis)				TOTAL PROJECT COST (FULLY FUNDED)				
		Estimate Prepared:			6/23/2020	Program Year (Budget EC):			2020					
		Effective Price Level:			10/1/2019	Effective Price Level Date:			1 OCT 19					
WBS NUMBER	Civil Works Feature & Sub-Feature Description	COST ($K)	CNTG ($K)	CNTG (%)	TOTAL ($K)	ESC (%)	COST ($K)	CNTG ($K)	TOTAL ($K)	Mid-Point Date	ESC (%)	COST ($K)	CNTG ($K)	FULL ($K)
A	*B*	*C*	*D*	*E*	*F*	*G*	*H*	*I*	*J*	*P*	*L*	*M*	*N*	*O*
	TSP - Initial Beach Nourishment PA 1													
17	BEACH REPLENISHMENT	$69,475	$20,843	30%	$90,318	0.0%	$69,475	$20,843	$90,318	2030Q2	35.4%	$94,041	$28,212	$122,254
	#N/A	$0	$0	30%	$0	0.0%	$0	$0	$0	0	0.0%	$0	$0	$0
	CONSTRUCTION ESTIMATE TOTALS:	$69,475	$20,843	30%	**$90,318**		$69,475	$20,843	$90,318			$94,041	$28,212	$122,254
01	LANDS AND DAMAGES	$34,589	$10,377	30%	$44,966	0.0%	$34,589	$10,377	$44,966	2028Q2	27.6%	$44,132	$13,240	$57,372
30	PLANNING, ENGINEERING & DESIGN	$8,198	$2,459	30%	$10,657		$8,198	$2,459	$10,657			$10,874	$3,262	
0.5%	Project Management	$347	$104	30%	$452	0.0%	$347	$104	$452	2025Q3	22.4%	$425	$128	$553
0.5%	Planning & Environmental Compliance	$347	$104	30%	$452	0.0%	$347	$104	$452	2025Q3	22.4%	$425	$128	$553
4.0%	Engineering & Design	$2,779	$834	30%	$3,613	0.0%	$2,779	$834	$3,613	2025Q3	22.4%	$3,402	$1,021	$4,422
1.0%	Reviews, ATRs, IEPRs, VE	$695	$208	30%	$903	0.0%	$695	$208	$903	2025Q3	22.4%	$850	$255	$1,106
0.3%	Life Cycle Updates (cost, schedule, risks)	$208	$63	30%	$271	0.0%	$208	$63	$271	2025Q3	22.4%	$255	$77	$332
0.2%	Contracting & Reprographics	$139	$42	30%	$181	0.0%	$139	$42	$181	2025Q3	22.4%	$170	$51	$221
4.0%	Engineering During Construction	$2,779	$834	30%	$3,613	0.0%	$2,779	$834	$3,613	2030Q2	46.5%	$4,072	$1,222	$5,294
1.0%	Planning During Construction	$695	$208	30%	$903	0.0%	$695	$208	$903	2030Q2	46.5%	$1,018	$305	$1,324
0.3%	Project Operations	$208	$63	30%	$271	0.0%	$208	$63	$271	2025Q3	22.4%	$255	$77	$332
31	CONSTRUCTION MANAGEMENT	$6,948	$2,084	30%	$9,032		$6,948	$2,084	$9,032			$10,181	$3,054	
8.0%	Construction Management	$5,558	$1,667	30%	$7,225	0.0%	$5,558	$1,667	$7,225	2030Q2	46.5%	$8,145	$2,443	$10,588
1.0%	Project Operation:	$695	$208	30%	$903	0.0%	$695	$208	$903	2030Q2	46.5%	$1,018	$305	$1,324
1.0%	Project Management	$695	$208	30%	$903	0.0%	$695	$208	$903	2030Q2	46.5%	$1,018	$305	$1,324
	CONTRACT COST TOTALS:	$119,210	$35,763		**$154,972**		$119,210	$35,763	$154,972			$159,228	$47,768	**$206,996**

****** TOTAL PROJECT COST SUMMARY ******

****** CONTRACT COST SUMMARY ******

PROJECT: Collier County CSRM Feasibility Study
LOCATION: Collier County, Florida
This Estimate reflects the scope and schedule in report; TSP

DISTRICT: NAO Norfolk District
POC: CHIEF, COST ENGINEERING

PREPARED: 7/7/2020

Civil Works Work Breakdown Structure		ESTIMATED COST				PROJECT FIRST COST (Constant Dollar Basis)				TOTAL PROJECT COST (FULLY FUNDED)				
		Estimate Prepared: 6/23/2020 Effective Price Level: 10/1/2019				Program Year (Budget EC): 2020 Effective Price Level Date: 1 OCT 19								
WBS NUMBER	Civil Works Feature & Sub-Feature Description	COST ($K)	CNTG ($K)	RISK BASED CNTG (%)	TOTAL ($K)	ESC (%)	COST ($K)	CNTG ($K)	TOTAL ($K)	Mid-Point Date	ESC (%)	COST ($K)	CNTG ($K)	FULL ($K)
A	*B*	*C*	*D*	*E*	*F*	*G*	*H*	*I*	*J*	*P*	*L*	*M*	*N*	*O*
	TSP - Initial Beach Nourishment PA 3													
17	BEACH REPLENISHMENT	$70,267	$21,080	30%	$91,347	0.0%	$70,267	$21,080	$91,347	2030Q2	35.4%	$95,113	$28,534	$123,647
		$0	$0	30%	$0	0.0%	$0	$0	$0	0	0.0%	$0	$0	$0
	CONSTRUCTION ESTIMATE TOTALS:	$70,267	$21,080	30%	**$91,347**		$70,267	$21,080	$91,347			$95,113	$28,534	$123,647
01	LANDS AND DAMAGES	$37,519	$11,256	30%	$48,775	0.0%	$37,519	$11,256	$48,775	2028Q2	27.6%	$47,870	$14,361	$62,231
30	PLANNING, ENGINEERING & DESIGN	$8,292	$2,487	30%	$10,779		$8,292	$2,487	$10,779			$10,998	$3,299	
0.5%	Project Management	$351	$105	30%	$457	0.0%	$351	$105	$457	2025Q3	22.4%	$430	$129	$559
0.5%	Planning & Environmental Compliance	$351	$105	30%	$457	0.0%	$351	$105	$457	2025Q3	22.4%	$430	$129	$559
4.0%	Engineering & Design	$2,811	$843	30%	$3,654	0.0%	$2,811	$843	$3,654	2025Q3	22.4%	$3,441	$1,032	$4,473
1.0%	Reviews, ATRs, IEPRs, VE	$703	$211	30%	$913	0.0%	$703	$211	$913	2025Q3	22.4%	$860	$258	$1,118
0.3%	Life Cycle Updates (cost, schedule, risks)	$211	$63	30%	$274	0.0%	$211	$63	$274	2025Q3	22.4%	$258	$77	$335
0.2%	Contracting & Reprographics	$141	$42	30%	$183	0.0%	$141	$42	$183	2025Q3	22.4%	$172	$52	$224
4.0%	Engineering During Construction	$2,811	$843	30%	$3,654	0.0%	$2,811	$843	$3,654	2030Q2	46.5%	$4,119	$1,236	$5,355
1.0%	Planning During Construction	$703	$211	30%	$913	0.0%	$703	$211	$913	2030Q2	46.5%	$1,030	$309	$1,339
0.3%	Project Operations	$211	$63	30%	$274	0.0%	$211	$63	$274	2025Q3	22.4%	$258	$77	$335
31	CONSTRUCTION MANAGEMENT	$7,027	$2,108	30%	$9,135		$7,027	$2,108	$9,135			$10,297	$3,089	
8.0%	Construction Management	$5,621	$1,686	30%	$7,308	0.0%	$5,621	$1,686	$7,308	2030Q2	46.5%	$8,238	$2,471	$10,709
1.0%	Project Operation:	$703	$211	30%	$913	0.0%	$703	$211	$913	2030Q2	46.5%	$1,030	$309	$1,339
1.0%	Project Management	$703	$211	30%	$913	0.0%	$703	$211	$913	2030Q2	46.5%	$1,030	$309	$1,339
	CONTRACT COST TOTALS:	$123,104	$36,931		**$160,035**		$123,104	$36,931	$160,035			$164,278	$49,284	**$213,562**

****** TOTAL PROJECT COST SUMMARY ******

****** CONTRACT COST SUMMARY ******

PROJECT: Collier County CSRM Feasibility Study
LOCATION: Collier County, Florida
This Estimate reflects the scope and schedule in report; TSP

DISTRICT: NAO Norfolk District
POC: CHIEF, COST ENGINEERING

PREPARED: 7/7/2020

Civil Works Work Breakdown Structure		ESTIMATED COST				PROJECT FIRST COST (Constant Dollar Basis)				TOTAL PROJECT COST (FULLY FUNDED)				
		Estimate Prepared:			**6/23/2020**	Program Year (Budget EC):			2020					
		Effective Price Level:			10/1/2019	Effective Price Level Date:			1 OCT 19					
WBS NUMBER	Civil Works Feature & Sub-Feature Description	COST ($K)	CNTG ($K)	CNTG (%)	TOTAL ($K)	ESC (%)	COST ($K)	CNTG ($K)	TOTAL ($K)	Mid-Point Date	ESC (%)	COST ($K)	CNTG ($K)	FULL ($K)
A	*B*	*C*	*D*	*E*	*F*	*G*	*H*	*I*	*J*	*P*	*L*	*M*	*N*	*O*
	TSP - Beach Renourishment PA 1													
17	BEACH REPLENISHMENT	$279,657	$83,897	30%	$363,554	0.0%	$279,657	$83,897	$363,554	2030Q2	35.4%	$378,543	$113,563	$492,106
		$0	$0	0%	$0	0.0%	$0	$0	$0	0	0.0%	$0	$0	$0
							$0							
	CONSTRUCTION ESTIMATE TOTALS:	$279,657	$83,897	30%	**$363,554**		$279,657	$83,897	$363,554			$378,543	$113,563	$492,106
01	LANDS AND DAMAGES	$0	$0	0%	$0	0.0%	$0	$0	$0	0	0.0%	$0	$0	$0
30	PLANNING, ENGINEERING & DESIGN	$33,000	$9,900	30%	$42,899		$33,000	$9,900	$42,899			$43,770	$13,131	
0.5%	Project Management	$1,398	$419	30%	$1,818	0.0%	$1,398	$419	$1,818	2025Q3	22.4%	$1,712	$514	$2,225
0.5%	Planning & Environmental Compliance	$1,398	$419	30%	$1,818	0.0%	$1,398	$419	$1,818	2025Q3	22.4%	$1,712	$514	$2,225
4.0%	Engineering & Design	$11,186	$3,356	30%	$14,542	0.0%	$11,186	$3,356	$14,542	2025Q3	22.4%	$13,694	$4,108	$17,802
1.0%	Reviews, ATRs, IEPRs, VE	$2,797	$839	30%	$3,636	0.0%	$2,797	$839	$3,636	2025Q3	22.4%	$3,423	$1,027	$4,450
0.3%	Life Cycle Updates (cost, schedule, risks)	$839	$252	30%	$1,091	0.0%	$839	$252	$1,091	2025Q3	22.4%	$1,027	$308	$1,335
0.2%	Contracting & Reprographics	$559	$168	30%	$727	0.0%	$559	$168	$727	2025Q3	22.4%	$685	$205	$890
4.0%	Engineering During Construction	$11,186	$3,356	30%	$14,542	0.0%	$11,186	$3,356	$14,542	2030Q2	46.5%	$16,393	$4,918	$21,311
1.0%	Planning During Construction	$2,797	$839	30%	$3,636	0.0%	$2,797	$839	$3,636	2030Q2	46.5%	$4,098	$1,229	$5,328
0.3%	Project Operations	$839	$252	30%	$1,091	0.0%	$839	$252	$1,091	2025Q3	22.4%	$1,027	$308	$1,335
31	CONSTRUCTION MANAGEMENT	$27,966	$8,390	30%	$36,355		$27,966	$8,390	$36,355			$40,982	$12,295	
8.0%	Construction Management	$22,373	$6,712	30%	$29,084	0.0%	$22,373	$6,712	$29,084	2030Q2	46.5%	$32,785	$9,836	$42,621
1.0%	Project Operation:	$2,797	$839	30%	$3,636	0.0%	$2,797	$839	$3,636	2030Q2	46.5%	$4,098	$1,229	$5,328
1.0%	Project Management	$2,797	$839	30%	$3,636	0.0%	$2,797	$839	$3,636	2030Q2	46.5%	$4,098	$1,229	$5,328
	CONTRACT COST TOTALS:	$340,622	$102,187		**$442,809**		$340,622	$102,187	$442,809			$463,295	$138,988	**$602,283**

****** TOTAL PROJECT COST SUMMARY ******

****** CONTRACT COST SUMMARY ******

PROJECT: Collier County CSRM Feasibility Study
LOCATION: Collier County, Florida
This Estimate reflects the scope and schedule in report; TSP

DISTRICT: NAO Norfolk District
POC: CHIEF, COST ENGINEERING

PREPARED: 7/7/2020

Civil Works Work Breakdown Structure		ESTIMATED COST				PROJECT FIRST COST (Constant Dollar Basis)				TOTAL PROJECT COST (FULLY FUNDED)				
		Estimate Prepared:			**6/23/2020**	Program Year (Budget EC):			2020					
		Effective Price Level:			10/1/2019	Effective Price Level Date:			1 OCT 19					
WBS NUMBER	Civil Works Feature & Sub-Feature Description	COST ($K)	CNTG ($K)	CNTG (%)	TOTAL ($K)	ESC (%)	COST ($K)	CNTG ($K)	TOTAL ($K)	Mid-Point Date	ESC (%)	COST ($K)	CNTG ($K)	FULL ($K)
A	*B*	*C*	*D*	*E*	*F*	*G*	*H*	*I*	*J*	*P*	*L*	*M*	*N*	*O*
	TSP - Beach Renourishment PA 3													
17	BEACH REPLENISHMENT	$214,379	$64,314	30%	$278,693	0.0%	$214,379	$64,314	$278,693	2030Q2	35.4%	$290,183	$87,055	$377,238
	#N/A	$0	$0	0%	$0	0.0%	$0	$0	$0	0	0.0%	$0	$0	$0
	CONSTRUCTION ESTIMATE TOTALS:	$214,379	$64,314	30%	**$278,693**		$214,379	$64,314	$278,693			$290,183	$87,055	$377,238
01	LANDS AND DAMAGES	$0	$0	0%	$0	0.0%	$0	$0	$0	0	0.0%	$0	$0	$0
30	PLANNING, ENGINEERING & DESIGN	$25,297	$7,589	30%	$32,886		$25,297	$7,589	$32,886			$33,553	$10,066	$43,619
0.5%	Project Management	$1,072	$322	30%	$1,393	0.0%	$1,072	$322	$1,393	2025Q3	22.4%	$1,312	$394	$1,706
0.5%	Planning & Environmental Compliance	$1,072	$322	30%	$1,393	0.0%	$1,072	$322	$1,393	2025Q3	22.4%	$1,312	$394	$1,706
4.0%	Engineering & Design	$8,575	$2,573	30%	$11,148	0.0%	$8,575	$2,573	$11,148	2025Q3	22.4%	$10,497	$3,149	$13,646
1.0%	Reviews, ATRs, IEPRs, VE	$2,144	$643	30%	$2,787	0.0%	$2,144	$643	$2,787	2025Q3	22.4%	$2,624	$787	$3,412
0.3%	Life Cycle Updates (cost, schedule, risks)	$643	$193	30%	$836	0.0%	$643	$193	$836	2025Q3	22.4%	$787	$236	$1,023
0.2%	Contracting & Reprographics	$429	$129	30%	$557	0.0%	$429	$129	$557	2025Q3	22.4%	$525	$157	$682
4.0%	Engineering During Construction	$8,575	$2,573	30%	$11,148	0.0%	$8,575	$2,573	$11,148	2030Q2	46.5%	$12,566	$3,770	$16,336
1.0%	Planning During Construction	$2,144	$643	30%	$2,787	0.0%	$2,144	$643	$2,787	2030Q2	46.5%	$3,142	$942	$4,084
0.3%	Project Operations	$643	$193	30%	$836	0.0%	$643	$193	$836	2025Q3	22.4%	$787	$236	$1,023
31	CONSTRUCTION MANAGEMENT	$21,438	$6,431	30%	$27,869		$21,438	$6,431	$27,869			$31,416	$9,425	$40,840
8.0%	Construction Management	$17,150	$5,145	30%	$22,295	0.0%	$17,150	$5,145	$22,295	2030Q2	46.5%	$25,133	$7,540	$32,672
1.0%	Project Operation:	$2,144	$643	30%	$2,787	0.0%	$2,144	$643	$2,787	2030Q2	46.5%	$3,142	$942	$4,084
1.0%	Project Management	$2,144	$643	30%	$2,787	0.0%	$2,144	$643	$2,787	2030Q2	46.5%	$3,142	$942	$4,084
	CONTRACT COST TOTALS:	$261,114	$78,334		**$339,448**		$261,114	$78,334	$339,448			$355,152	$106,545	**$461,697**

US Army Corps of Engineers®

COLLIER COUNTY 50-YEAR SAND SUPPLY LETTER SUB - APPENDIX

Collier County
Growth Management Department
Capital Project Planning, Impact Fees
& Program Management Division

May 24, 2019

Ms. Susan L. Conner
Chief - Planning and Policy Branch
Norfolk Branch
US Army Corps of Engineers

Re: Collier County 50-Year Sand Supply

Dear Susan:

Collier County has potential sand resources that will provide beach quality sediment for the next 50 years. The in-progress review (USACE Norfolk District May 7, 2019) has indicated that Collier County has a sediment deficit of approximately 5.7 million cubic yards (APTIM, 2018a). However, this number does not take into account a currently permitted Collier County borrow area in federal waters (T1), the planned expansion of these federal borrow areas, and the planned use of upland mines and inlets to offset the total volumes needed. This letter describes how to interpret the volumes described in APTIM's 2018 report and identified over 8.2 million cubic yards of beach compatible sand.

A sediment needs study for the west coast of Florida was carried out during the 2017 Southwest Florida Borrow Area Update project prepared by APTIM for the Florida Department of Environmental Protection (FDEP) (APTIM, 2018a). Each county was given a list of projects and a set of questions to determine the 50-year sediment needs for each county. Collier County identified three projects with the following estimated 50-year sand requirements: Collier County Beach Renourishment Project at 4.3 million cubic yards (mcy), South Marco Island at 1 mcy, and Hideaway Beach was unknown. Contingencies were applied to the sediment needs to account for sand left in the borrow area (30%), sediment lost when dredging and placing sediment (15%), and potential sand loss due to sea level rise (10%). The total 50-year sand estimate for the county of 5.3 mcy becomes 8.2 mcy with contingencies applied (55%).

A primary purpose of the 2017 Southwest Florida Borrow Area Update report was to identify and classify all potential borrow areas offshore Florida's southwest coast (APTIM, 2018a). Borrow area names were standardized as:

CCMM-RNNNL

Where:
CC is the county code
MM is the rounded-down integer number of statute miles offshore
RNNN is the nearest range monument (R-monuments spaced approximately 1,000 feet along Florida's coastline) padded with zeros
L is the sequential letter representing the relative age of the borrow area when multiple borrow areas are assigned the same name.

County code, range monument and distance offshore were spatially determined by the closest range monument to the center of the potential borrow area. One of Collier County's primary borrow areas is located in federal waters, originally named Borrow Area T1 (Figure 1). This borrow area has been renamed LE13-R107B because the closest range monument to Borrow Area T1 is in Lee County, number 107. The new naming convention by no means indicates Borrow Area T1 is for Lee County. Quite the contrary, Collier County is the holder of the permits and BOEM lease for LE13-R107B, and it is Collier's intention to expand LE13-R107B to take full advantage of the entire sediment source.

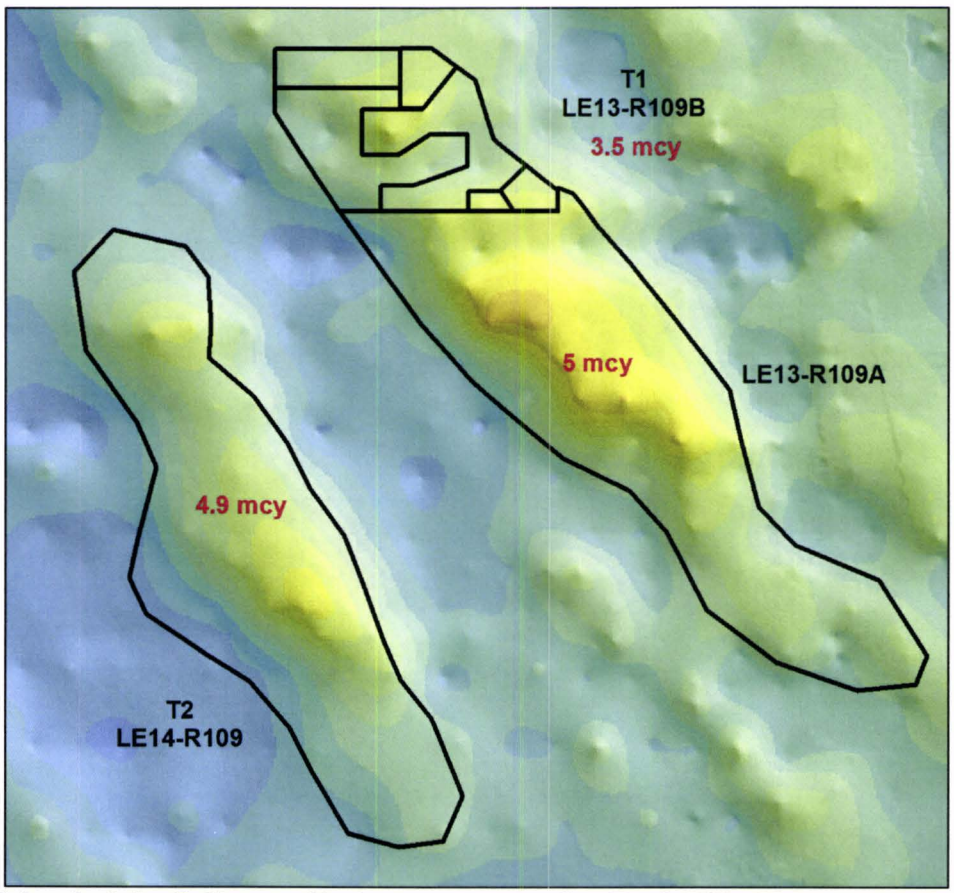

Figure 1. Color-shaded relief image of bathymetry surrounding Tom's Hills. Volumes are labeled in red.

Volumes for proven, potential, and unverified borrow areas offshore Collier County were calculated based on historic NOAA bathymetric data and published cut depths (APTIM, 2018a). Contingencies were applied to the estimated volumes, where 90% was applied for proven, 70% for potential, and 30% for unverified. The total volume of offshore borrow areas with contingency for Collier County was 2.5 mcy. Given the 8.2 mcy 50-year sediment needs for Collier, the county is in need of an additional 5.7 mcy.

However, the 2017 Southwest Florida Borrow Area Update report does not take into account Tom's Hills or sediments from inlets or upland sand sources. The northern section of T1 is currently permitted by Collier County, named LE13-R109B. This permitted borrow area has approximately 3.5 mcy of sediment. It is possible to deepen LE13-R109B to gain more sediment, and expand the southern boundary to take advantage of the remainder of the hill. The southern section, LE13-R109A, is estimated to contain 5 mcy. The hill immediately west of T1, called T2 or LE14-R109, has an estimated 4.9 mcy. This is an unadjusted volume of 13.4 mcy.

By combining the existing permitted borrow area with potential expansion of T1, inclusion of T2 along with sand from inlets and upland mines, Collier County has the sediment volume it needs in order to construct their beach nourishment projects over the next 50 years. Upland sand sources are currently permitted for Collier County and have been successfully utilized on small nourishment projects addressing hot spot erosion areas. Collier County supports USACE's regional sediment management (RSM) program by beneficially placing dredged material from County-maintained inlets on nearby beaches. The Doctor's Pass project places approximately 38,000 cy of material dredged from the Pass onto nearby beaches every four years (APTIM, 2018b). For the 50-year planning horizon, Doctor's Pass is estimated to contribute 475,000 cy to their beach nourishment program. Caxambus Pass and Big Marco Pass are also renewable sources. This is not meant to be a full accounting of sand available to support a long-term nourishment program, but it does illustrate that the amount will support a 50- year program.

APTIM, 2018a. 2017 Southwest Florida Borrow Area Update. Report prepared for Florida Department of Environmental Protection. Boca Raton, FL: 31 p.

APTIM, 2018b. Completion and Certification Statement for 2017/2018 Wiggins Pass and Doctors Pass Maintenance Dredging Project. Letter to Florida Department of Environmental Protection. Boca Raton, FL: 3 p.

If you should have any questions, please feel free to contact me.

Sincerely,

Gary McAlpin, P.E.
Collier County Government
2685 S. Horseshoe Drive, Unit 103
Naples, FL 34104

cc: Stephen Keehn, PE, APTIM
Ian Swisher, USACE
Dan Hughes, USACE
Ashton Burgin, USACE
Kyle V. McElroy, USACE, P.E.