ANNEX B-1

GEOTECHNICAL DATA

ANNEX B (Geotechnical)

Challenge Engineering & Testing, Inc.
Borings/Test Pits

LOWP ANNEX B (GEOTECHNICAL): Previous Subsurface Investigations by Challenge Engineering & Testing, Inc.

From 17 August 2007 to 26 September 2007

BORING DRILLING TEST LOCATIONS

Boring/Well Number	NAD 1983 Florida East Northing	Easting	Elevation (Ft.)	Termination Elevation	Boring Depth(Ft)
CP06-LOWSP-CB-0013	1065589	600292	30.67	-49.33	80.0
CP06-LOWSP-CB-0014	1070178	634545	37.98	-42.02	80.0
CP06-LOWSP-CB-0015	1069437	637471	36.85	-43.15	80.0
CP06-LOWSP-CB-0016	1066108	637481	35.50	-114.50	150.0
CP06-LOWSP-CB-0017	1055362	627453	26.83	-53.17	80.0
CP06-LOWSP-CB-0018	1057784	621059	27.77	-52.23	80.0
CP06-LOWSP-CB-0019	1059703	616005	26.50	-53.50	80.0
CP06-LOWSP-CB-0020	1062753	607903	27.68	-52.32	80.0
CP06-LOWSP-CB-0021	1063306	605058	28.47	-31.53	60.0
CP06-LOWSP-CB-0022	1060017	613694	31.35	-118.65	150.0
CP06-LOWSP-CB-0023	1056384	623240	34.46	-25.54	60.0

BORING DRILLING TEST LOCATIONS

Boring/Well Number	NAD 1983 Florida East Northing	Easting	Elevation (Ft.)	Termination Elevation	Boring Depth(Ft)
CP06-LOWSP-CB-0024	997451	654543	16.62	1.62	15.0
CP06-LOWSP-CB-0025	985613	658105	15.10	0.10	15.0
CP06-LOWSP-CB-0026	978933	651435	14.27	-0.73	15.0
CP06-LOWSP-CB-0027	975197	647073	13.38	-1.62	15.0
CP06-LOWSP-CB-0028	973111	641856	13.49	-1.51	15.0
CP06-LOWSP-CB-0029	970792	635105	15.40	-0.35	15.8
CP06-LOWSP-CB-0030	976046	635133	17.91	2.91	15.0
CP06-LOWSP-CB-0031	980330	634960	17.41	2.41	15.0
CP06-LOWSP-CB-0032	981373	639498	16.38	1.38	15.0
CP06-LOWSP-CB-0033	985754	642621	17.36	2.36	15.0
CP06-LOWSP-CB-0034	990067	645746	22.16	7.16	15.0
CP06-LOWSP-CB-0035	995891	649574	17.02	2.02	15.0
TEST PITS					
CP06-LOWSP-TP-0064	992486	654748	16.26	15.26	1.00
CP06-LOWSP-TP-0065	987145	652414	14.68	4.68	10.00
CP06-LOWSP-TP-0066	983309	647475	14.92	4.92	10.00
CP06-LOWSP-TP-0067	978834	644518	12.99	2.99	10.00
CP06-LOWSP-TP-0068	976068	639118	15.95	5.95	10.00

From 24 April 2008 to 6 May 2008

BORING DRILLING TEST LOCATIONS

Boring/Well Number	NAD 1983 Florida East Northing	Easting	Elevation (Ft.)	Termination Elevation
CP08-LOWSP-CB-0036	1058872	638628	31.00	-49.00
CP08-LOWSP-CB-0037	1049114	622576	30.50	-29.50
CP08-LOWSP-CB-0038	1045540	616932	28.20	-31.80
CP08-LOWSP-CB-0039	1045559	611993	31.00	-29.00
CP08-LOWSP-CB-0040	1045517	607518	26.40	-33.60
CP08-LOWSP-CB-0041	1056712	600997	24.20	-35.80

Constant Head Gravity Test Data

Lake Okeechobee Watershed Project: Constant Head Gravity Test Data/Results
K-05 Site

All Casing Diameter: 2" (O.D.) Sch 40 PVC
All Boring Diameter: 8" (O.D.) Flighted, steel auger

			Column A	Column B	Column C	Column D
			k_y (cm/s)	Anisotropy (k_x/k_y)	k_x (cm/s)	k_x (cm/s) from USBR DS-13(8) Figure 8.3.2.3.1-1
CP17-CH-0042	Test Interval (feet BGS)	Soil Classification				
	7-9	SC	0.003	10	0.03	0.001
	19-21	SP	0.015	10	0.15	0.05
	27-29	SM	0.001	10	0.01	0.01
CP17-CH-0043	Test Interval (feet BGS)	Soil Classification				
	5-7	SP	0.001	10	0.01	0.05
	10-12	SP	0.001	10	0.01	0.05
	17-19	SP	0.002	10	0.02	0.05
CP17-CH-0044	Test Interval (feet BGS)	Soil Classification				
	5-7	SC	0.015	10	0.15	0.001
	12-14	SP	0.002	10	0.02	0.05
	21-22	SP	0.005	10	0.05	0.05
CP17-CH-0045	Test Interval (feet BGS)	Soil Classification				
	11-13	SP	0.001	10	0.01	0.05
	20.5-22.5	SP	0.011	10	0.11	0.05
	26-28	SM	0.006	10	0.06	0.01
CP17-CB-0046	Test Interval (feet BGS)	Soil Classification				
	8-10	SP	0.023	10	0.23	0.05
	15-17	SP	0.001	10	0.01	0.05
	25-27	SP	0.001	10	0.01	0.05
CP17-CH-0048	Test Interval (feet BGS)	Soil Classification				
	2-4	SC	---	---	---	0.001
	12-14	SP	0.008	10	0.08	0.075
	25-27	SC	0.0003	10	0.003	0.001
CP17-CH-0049	Test Interval (feet BGS)	Soil Classification				
	10-12	SP	0.001	10	0.01	0.05
	23-25	SC	0.008	10	0.08	0.001
	28-30	CL	0.0002	10	0.002	0.000003

Close correlation
BGS = below ground surface
N/C = no contact

Sum (K-05)	1.07
Ave (K-05)	0.053 (cm/s)

Double Ring Infiltrometer Data

Lake Okeechobee Watershead Project: DRI Summary Results							
K-05 Site							
	Soil Class.	Estimated Incremental Infiltration Rate Inner (cm/hr)	Estimated Incremental Infiltration Rate Inner (ft/s)	Long-Term Vert. Hyd. Cond. (cm/hr)	Long-Term Horiz. Hyd. Cond. (cm/hr)	Long-Term Horiz. Hyd. Cond. (ft/s)	Long-Term Horiz. Hyd. Cond. (ft/yr)
Test Location: CP17-CH-0045A	SC	0.75	6.83508E-06	0.75	7.5	6.835E-05	2155.5
Test Location: CP17-CH-0045B	SC	1.53	1.39436E-05	1.53	15.3	1.394E-04	4397.2
Test Location: CP17-CH-0044A	OL/SP	2.85	2.59733E-05	2.85	28.5	2.597E-04	8190.9
Test Location: CP17-CH-0044B	OL/SP	0.24	2.18723E-06	0.24	2.4	2.187E-05	689.8
Test Location: CP17-CH-0046B	OL/SP	0.17	1.54929E-06	0.17	1.7	1.549E-05	488.6
Test Location: CP17-CH-0023A	SM	0.27	2.46063E-06	0.27	2.7	2.461E-05	776.0

SEEP/W Figures and Results

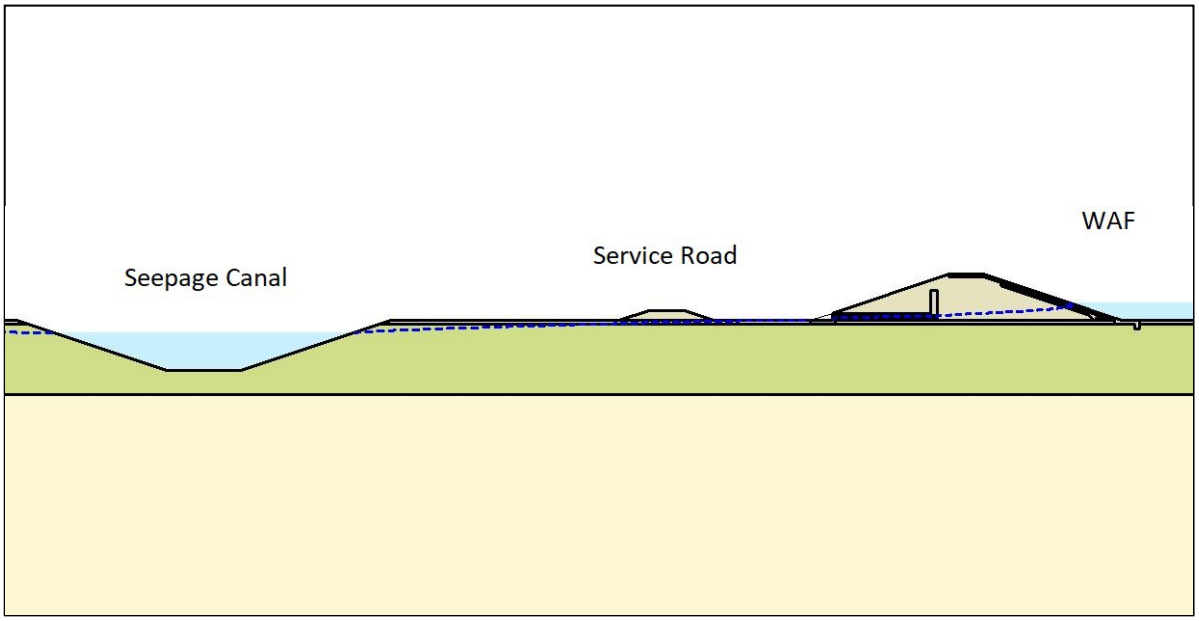

Figure 1: Section 1, Pool at El. 25ft, no toe filter, Seepage Canal wse at 13ft.

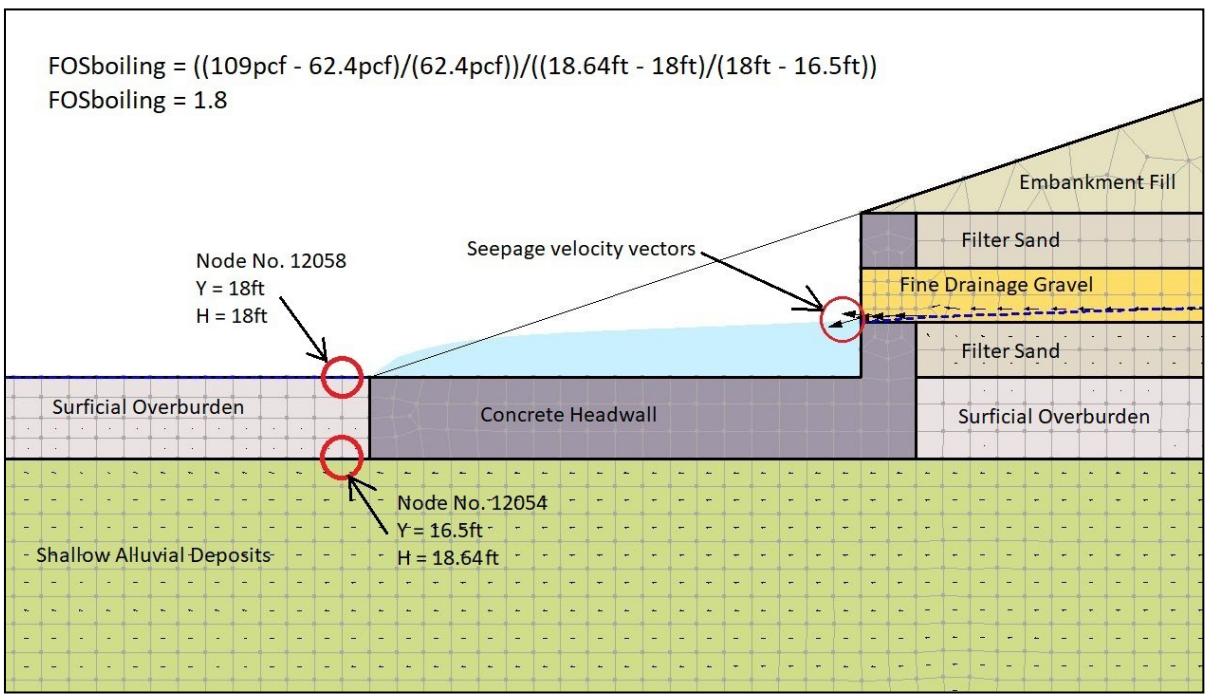

Figure 2: FOS against boiling calculation, Section 1, Pool at El. 25ft, no toe filter, Seepage Canal wse at 13ft.

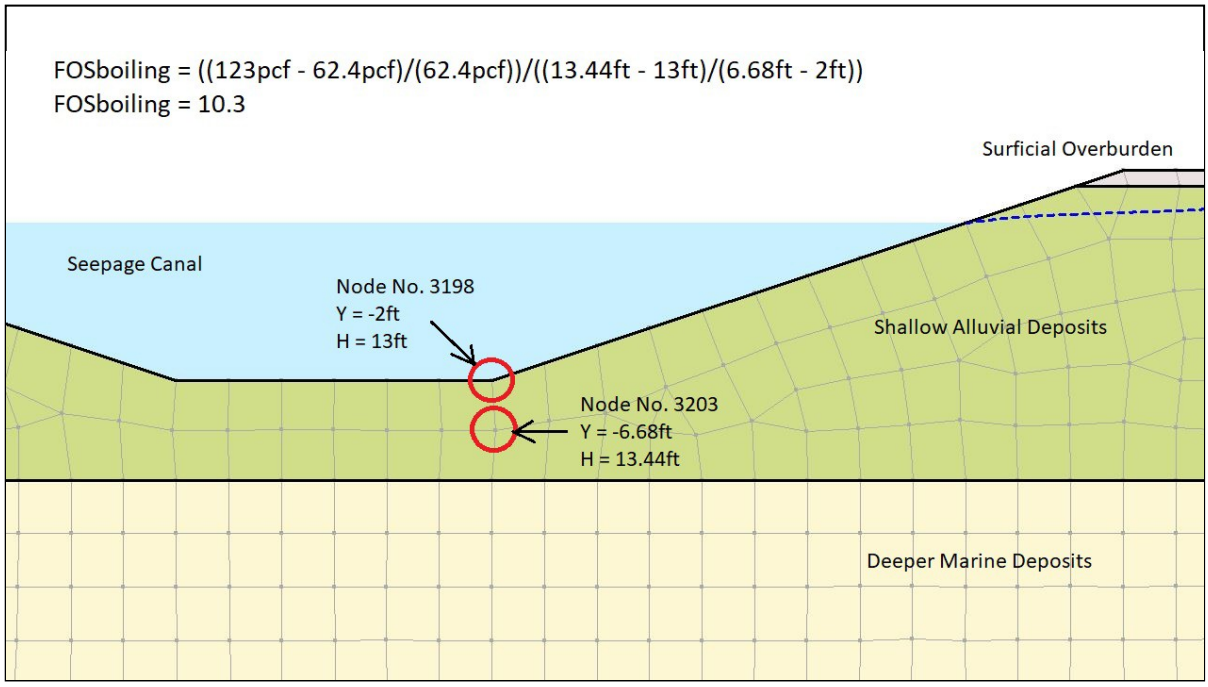

Figure 3: FOS against boiling calculation, Section 1, Pool at El. 25ft, no toe filter, Seepage Canal wse at 13ft.

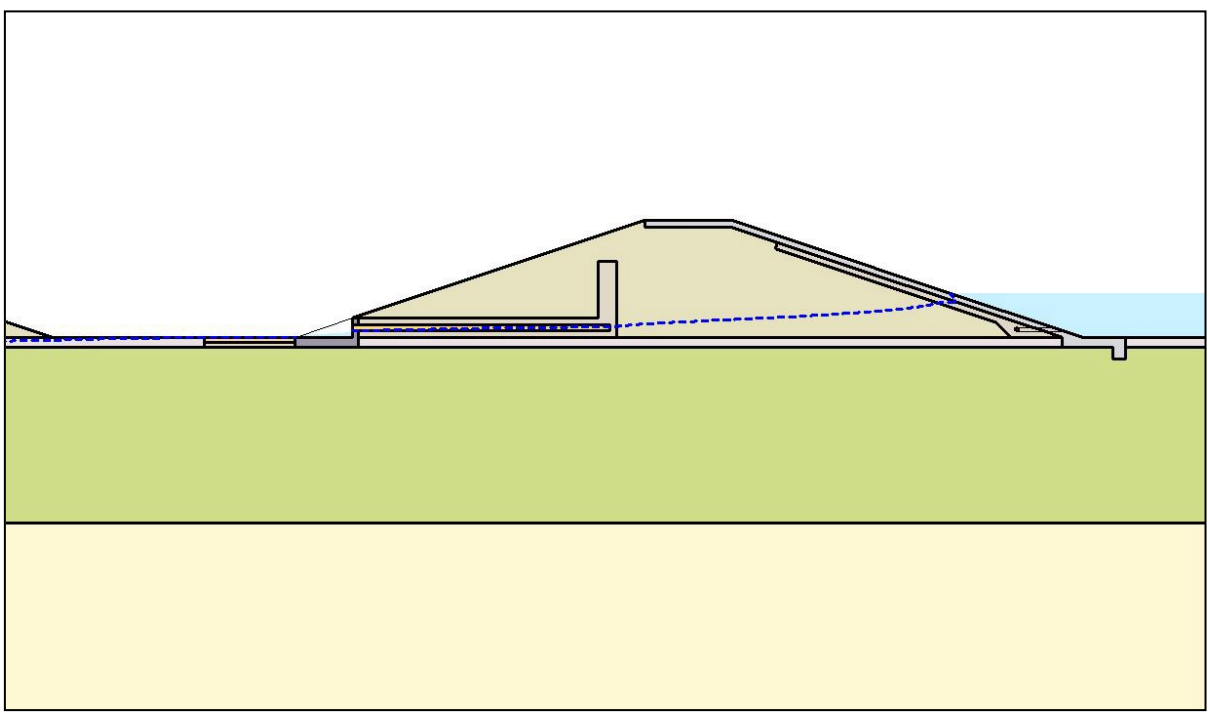

Figure 4: Section 1, Pool at El. 25ft, toe filter, Seepage Canal wse at 13ft.

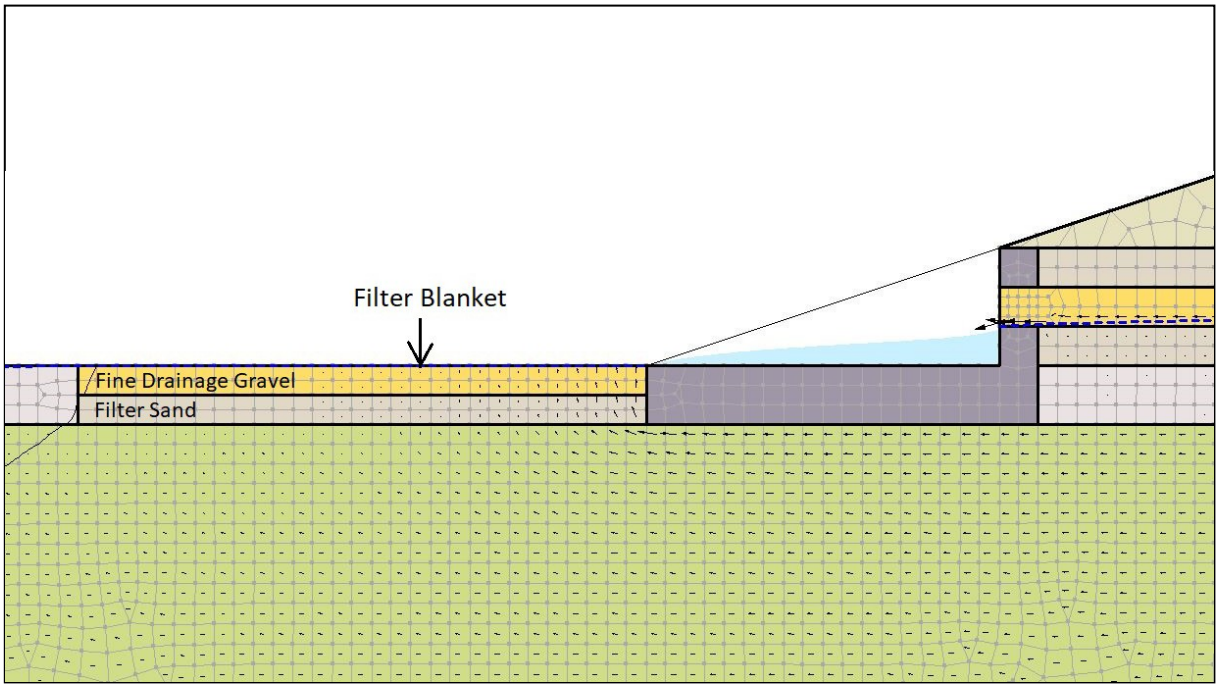

Figure 5: Close up of the toe filter, Section 1, Pool at El. 25ft, Seepage Canal wse at 13ft.

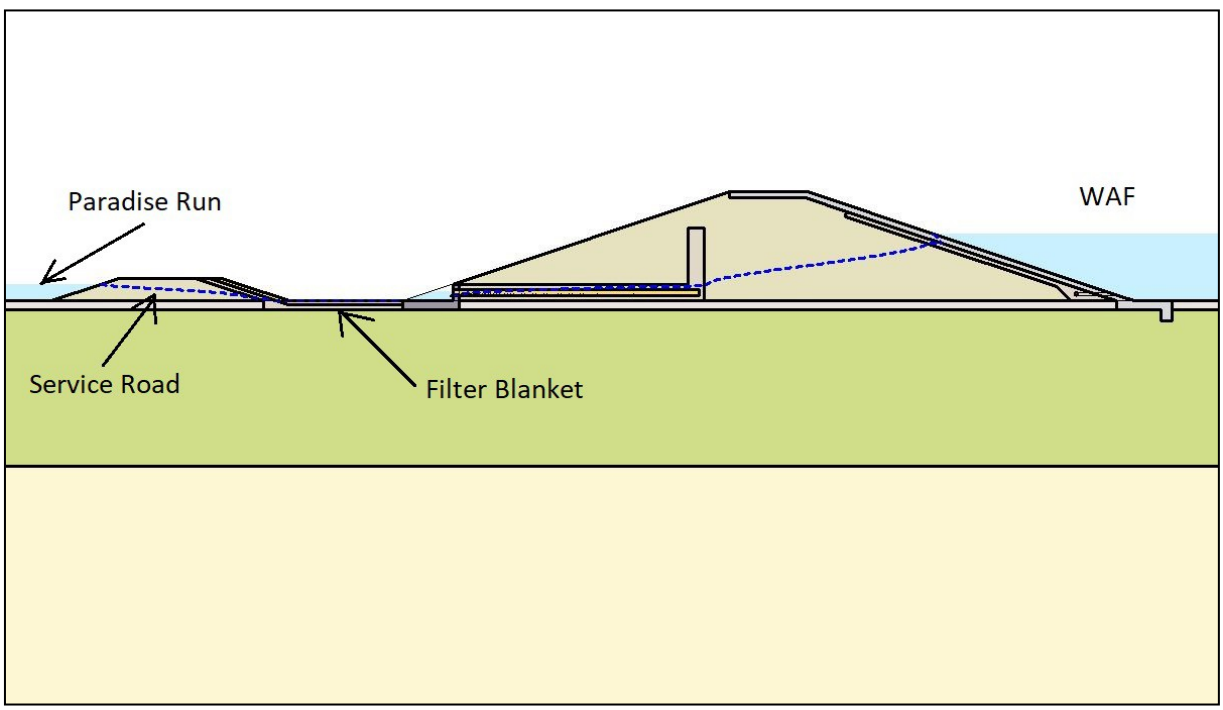

Figure 6: Section 2, Pool at El. 23ft, toe filter, Paradise Run wse at 18ft.

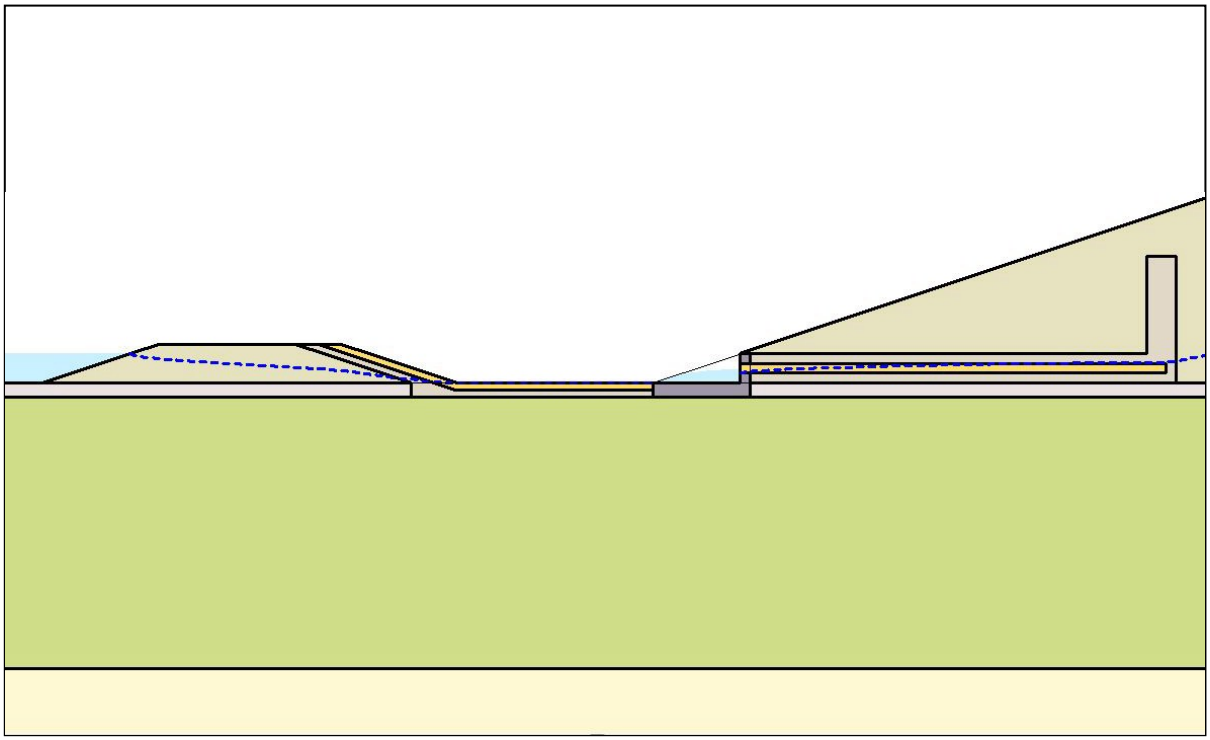

Figure 7: Close up of service road and the toe filter, Section 2, Pool at El. 23ft, Paradise Run wse at 18ft.

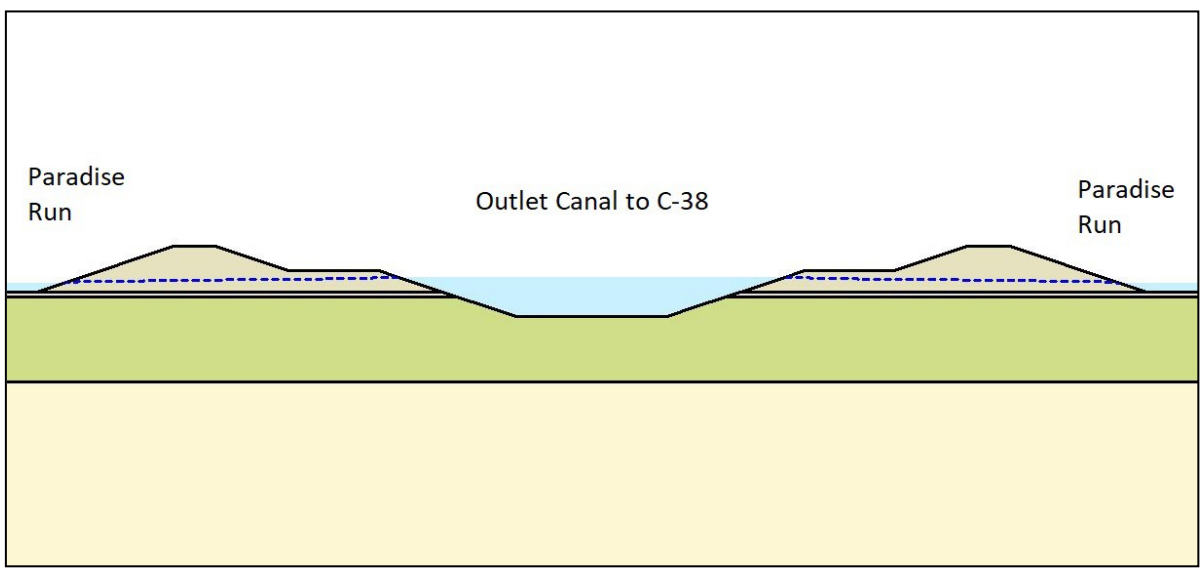

Figure 8: Section 3, Outlet Canal wse at El. 20ft, Paradise Run wse at 18ft.

LOWP Annex B (Geotechnical)

SEEP/W Results

Model Run	U/S - D/S Head Δ (ft)	Critical Gradient, i_c (1)	SEEP/W - Vertical Hydraulic Gradient, i_y (2)	i_y Location	FOS against Boiling, i_c/i_y	Flow rate through Embankment (cfs/lf)	Flow rate from Toe Drain (cfs/lf)	Flow rate into Seepage Canal (cfs/lf)	Percentage of Flow rate not captured by Seepage Canal
Section 1 - Pool at El. 25 ft, no Toe Filter, Seepage Canal wse at 13ft	7.00	0.75	0.43	D/S toe, through surficial overburden layer	1.8	3.18E-03	1.28E-04	2.91E-03	0.01%
Section 1 - Pool at El. 25 ft, no Toe Filter, Seepage Canal wse at 13ft	7.00	0.97	0.09	Bottom of seepage canal at slope break	10.3	3.18E-03	1.28E-04	2.91E-03	0.01%
Section 1 - Pool at El. 25 ft, Toe Filter, Seepage Canal wse at 13ft	7.00	1.08	0.01	D/S toe, fine drainage gravel	81.2	3.24E-03	7.50E-05	2.84E-03	0.03%
Section 1 - Pool at El. 25 ft, Toe Filter, Seepage Canal wse at 13ft	7.00	0.97	0.09	Bottom of seepage canal at slope break	10.6	3.24E-03	7.50E-05	2.84E-03	0.03%
Section 1 - Pool at El. 29 ft, Toe Filter, Seepage Canal wse at 13ft	11.00	1.08	0.01	D/S toe, fine drainage gravel	81.2	4.84E-03	4.46E-04	3.44E-03	0.09%
Section 1 - Pool at El. 29 ft, Toe Filter, Seepage Canal wse at 13ft	11.00	0.97	0.11	Bottom of seepage canal at slope break	8.7	4.84E-03	4.46E-04	3.44E-03	0.09%
Section 2 - Pool at El. 23 ft, no Toe Filter, PR wse at 18ft	8.00	0.75	1.44	D/S toe, through surficial overburden layer	0.5	2.25E-03	8.71E-04	N/A	N/A
Section 2 - Pool at El. 23 ft, Toe Filter, PR wse at 18ft	8.00	1.08	0.01	D/S toe, fine drainage gravel	81.3	2.48E-03	5.60E-04	N/A	N/A
Section 2 - Pool at El. 23 ft, Toe Filter, PR wse at 18ft	8.00	1.08	0.01	D/S toe of road, fine drainage gravel	81.3	2.48E-03	5.60E-04	N/A	N/A
Section 2 - Pool at El. 27 ft, Toe Filter, PR wse at 18ft	8.00	1.08	0.01	D/S toe, fine drainage gravel	81.3	4.13E-03	1.02E-03	N/A	N/A
Section 3 - Canal wse at 20ft, surrounding wse in PR at 18ft	8.00	0.75	0.23	Exterior toe, surficial overburden layer	3.3	5.94E-04	N/A	N/A	N/A

(1) Critical gradient = buoyant unit weight of material through which seepage occurs / unit weight of water

(2) Determined by using two different nodes

Figure 9: SEEP/W results

SEEP/W Program Files

Steady-State Seepage (EOC)

Report generated using GeoStudio 2012. Copyright © 1991-2013 GEO-SLOPE International Ltd.

File Information

Title: LOWP PIR Analysis Section B
Created By: Viessman, Michael W CIV USARMY CESAJ (US)
Last Edited By: Viessman, Michael W CIV USARMY CESAJ (US)
Revision Number: 517
File Version: 8.2
Tool Version: 8.12.3.7901
Date: 8/25/2018
Time: 3:05:08 PM
File Name: Section B EOC USP no toe drain.gsz
Directory: C:\Users\k3engmwv\Documents\LOWP\FY17-18 PIR Work\SEEP and SLOPEW Files\

Project Settings

Length(L) Units: feet
Time(t) Units: Seconds
Force(F) Units: lbf
Pressure(p) Units: psf
Mass(M) Units: lbs
Mass Flux Units: lbs/sec
Unit Weight of Water: 62.4 pcf
View: 2D
Element Thickness: 1

Analysis Settings

Steady-State Seepage (EOC)

Description: No U/S pool, no toe drain, canal at wse 13ft
Kind: SEEP/W
Method: Steady-State
Settings
    Include Air Flow: No
Control
    Apply Runoff: Yes
Convergence
    Maximum Number of Iterations: 1,000
    Minimum Pressure Head Difference: 0.005
    Significant Digits: 2
    Max # of Reviews: 10
    Hydraulic Under-Relaxation Criteria
        Under-Relaxation Initial Rate: 1
        Under-Relaxation Min. Rate: 0.1

Under-Relaxation Reduction Rate: 0.65
Under-Relaxation Iterations: 10
Equation Solver: Parallel Direct
Time
Starting Time: 0 sec
Duration: 0 sec
Ending Time: 0 sec

Materials

Matl. 1 - Embankment Material

Model: Saturated / Unsaturated
Hydraulic
K-Function: Matl. 1 Embankment Material
Ky'/Kx' Ratio: 0.25
Rotation: 0 °
Vol. WC. Function: Matl. 1 Embankment Fill from Borrow Areas

Matl. 2 - Surficial Overburden Layer

Model: Saturated / Unsaturated
Hydraulic
K-Function: Matl. 2 Surficial Overburden Layer
Ky'/Kx' Ratio: 0.1
Rotation: 0 °
Vol. WC. Function: Matl. 2 Surficial Overburden Layer

Matl. 3 - Shallow Alluvial Deposits

Model: Saturated / Unsaturated
Hydraulic
K-Function: Matl. 3 Shallow Alluvial Deposits
Ky'/Kx' Ratio: 0.1
Rotation: 0 °
Vol. WC. Function: Matl. 3 Shallow Alluvial Deposits

Matl. 4 - Deeper Marine Deposits

Model: Saturated / Unsaturated
Hydraulic
K-Function: Matl. 4 Deeper Marine Deposits
Ky'/Kx' Ratio: 0.1
Rotation: 0 °
Vol. WC. Function: Matl. 4 Deeper Marine Deposits

Matl. 5 - Soil Cement Armoring

Model: Saturated / Unsaturated
Hydraulic
K-Function: Matl. 5 Soil Cement Armoring
Ky'/Kx' Ratio: 1
Rotation: 0 °
Vol. WC. Function: Matl. 5 Soil Cement Armoring

Matl. 6 - Fine Drainage Gravel

Model: Saturated / Unsaturated
Hydraulic
K-Function: Matl. 6 Fine Drainage Gravel
Ky'/Kx' Ratio: 1
Rotation: 0 °
Vol. WC. Function: Mat. 6 Fine Drainage Gravel (No 89)

Matl. 8 - Filter Sand

Model: Saturated / Unsaturated
Hydraulic
K-Function: Matl. 8 Filter Sand
Ky'/Kx' Ratio: 1
Rotation: 0 °
Vol. WC. Function: Matl. 8 Filter Sand (C33)

Matl. 9 Concrete Outfall Works

Model: Saturated Only
Hydraulic
K-Sat: 3.28e-010 ft/sec
Ky'/Kx' Ratio: 1
Rotation: 0 °
Volumetric Water Content: 0.3 ft^3/ft^3
Mv: 1e-008 /psf

Boundary Conditions

Drainage

Type: Total Flux (Q) 0
Review: Yes

Seepage Canal at Elev. 13ft

Type: Head (H) 13
Review: No

Flux Sections

Flux Section 1

Coordinates
Coordinate: (-53.387097, 20.026507) ft
Coordinate: (-53.387097, 18.965214) ft

Flux Section 2

Coordinates
Coordinate: (-77.145669, 18.00689) ft
Coordinate: (-77.130906, 16.397638) ft
Coordinate: (-62.322835, 16.373031) ft

Coordinate: (-62.322835, 16.63878) ft

Flux Section 3

Coordinates

Coordinate: (0, 36.6) ft
Coordinate: (0, -112.3) ft

Flux Section 4

Coordinates

Coordinate: (-382.8, 18.2) ft
Coordinate: (-319.7, -3.4) ft
Coordinate: (-289.2, -3.3) ft
Coordinate: (-228.6, 17.7) ft

Flux Section 5

Coordinates

Coordinate: (-399.8, 18) ft
Coordinate: (-400.1, -112.4) ft

K Functions

Matl. 1 Embankment Material

Model: Hyd K Data Point Function
Function: X-Conductivity vs. Pore-Water Pressure
Curve Fit to Data: 100 %
Segment Curvature: 36 %
K-Saturation: 0.000131
Data Points: Matric Suction (psf), X-Conductivity (ft/sec)
Data Point: (0.01, 0.000131)
Data Point: (0.018329807, 0.00013099927)
Data Point: (0.033598183, 0.00013099852)
Data Point: (0.061584821, 0.00013099772)
Data Point: (0.11288379, 0.00013099684)
Data Point: (0.20691381, 0.00013099581)
Data Point: (0.37926902, 0.0001309945)
Data Point: (0.6951928, 0.00013099268)
Data Point: (1.274275, 0.00013098992)
Data Point: (2.3357215, 0.00013098549)
Data Point: (4.2813324, 0.0001309777)
Data Point: (7.8475997, 0.00013096339)
Data Point: (14.384499, 0.00013094955)
Data Point: (26.366509, 0.00013089452)
Data Point: (48.329302, 0.00013043835)
Data Point: (88.586679, 0.00012910123)
Data Point: (162.37767, 5.664247e-005)
Data Point: (297.63514, 2.5159921e-006)
Data Point: (545.55948, 4.7485927e-008)
Data Point: (1,000, 1.7886028e-009)
Estimation Properties

Hyd. K-Function Estimation Method: Fredlund-Xing Function
Volume Water Content Function: Matl. 1 Embankment Fill from Borrow Areas
Hydraulic K Sat: 0.000131 ft/sec
Residual Water Content: 0.0495 ft^3/ft^3
Maximum: 1,000
Minimum: 0.01
Num. Points: 20

Matl. 4 Deeper Marine Deposits

Model: Hyd K Data Point Function
Function: X-Conductivity vs. Pore-Water Pressure
Curve Fit to Data: 100 %
Segment Curvature: 44 %
K-Saturation: 0.000984
Data Points: Matric Suction (psf), X-Conductivity (ft/sec)
Data Point: (0.01, 0.000984)
Data Point: (0.018329807, 0.00098398585)
Data Point: (0.033598183, 0.00098397151)
Data Point: (0.061584821, 0.00098395679)
Data Point: (0.11288379, 0.00098394139)
Data Point: (0.20691381, 0.00098392476)
Data Point: (0.37926902, 0.00098390584)
Data Point: (0.6951928, 0.00098388274)
Data Point: (1.274275, 0.00098385199)
Data Point: (2.3357215, 0.0009838074)
Data Point: (4.2813324, 0.00098373618)
Data Point: (7.8475997, 0.00098361453)
Data Point: (14.384499, 0.0009834543)
Data Point: (26.366509, 0.00098304118)
Data Point: (48.329302, 0.00098089274)
Data Point: (88.586679, 0.00098804841)
Data Point: (162.37767, 0.00089693201)
Data Point: (297.63514, 0.00029836287)
Data Point: (545.55948, 5.5741791e-006)
Data Point: (1,000, 8.8545842e-008)
Estimation Properties
Hyd. K-Function Estimation Method: Fredlund-Xing Function
Volume Water Content Function: Matl. 4 Deeper Marine Deposits
Hydraulic K Sat: 0.000984 ft/sec
Residual Water Content: 0.03 ft^3/ft^3
Maximum: 1,000
Minimum: 0.01
Num. Points: 20

Matl. 6 Fine Drainage Gravel

Model: Hyd K Data Point Function
Function: X-Conductivity vs. Pore-Water Pressure
Curve Fit to Data: 100 %
Segment Curvature: 40 %
K-Saturation: 0.0116

Data Points: Matric Suction (psf), X-Conductivity (ft/sec)
- Data Point: (0.01, 0.0116)
- Data Point: (0.018329807, 0.011599999)
- Data Point: (0.033598183, 0.011599999)
- Data Point: (0.061584821, 0.011599997)
- Data Point: (0.11288379, 0.011599992)
- Data Point: (0.20691381, 0.011599991)
- Data Point: (0.37926902, 0.011600028)
- Data Point: (0.6951928, 0.011599657)
- Data Point: (1.274275, 0.011599409)
- Data Point: (2.3357215, 0.011606742)
- Data Point: (4.2813324, 0.01023118)
- Data Point: (7.8475997, 0.0019666911)
- Data Point: (14.384499, 3.3083667e-005)
- Data Point: (26.366509, 3.5079262e-007)
- Data Point: (48.329302, 1.0209264e-008)
- Data Point: (88.586679, 1.7809046e-009)
- Data Point: (162.37767, 3.7872508e-010)
- Data Point: (297.63514, 7.9282799e-011)
- Data Point: (545.55948, 1.3312429e-011)
- Data Point: (1,000, 1.2335483e-012)

Estimation Properties
- Hyd. K-Function Estimation Method: Fredlund-Xing Function
- Volume Water Content Function: Mat. 6 Fine Drainage Gravel (No 89)
- Hydraulic K Sat: 0.0116 ft/sec
- Residual Water Content: 0.042 ft^3/ft^3
- Maximum: 1,000
- Minimum: 0.01
- Num. Points: 20

Matl. 2 Surficial Overburden Layer

Model: Hyd K Data Point Function

Function: X-Conductivity vs. Pore-Water Pressure
- Curve Fit to Data: 100 %
- Segment Curvature: 36 %

K-Saturation: 0.00026

Data Points: Matric Suction (psf), X-Conductivity (ft/sec)
- Data Point: (0.01, 0.00026)
- Data Point: (0.018329807, 0.00025999835)
- Data Point: (0.033598183, 0.00025999664)
- Data Point: (0.061584821, 0.00025999485)
- Data Point: (0.11288379, 0.00025999288)
- Data Point: (0.20691381, 0.00025999062)
- Data Point: (0.37926902, 0.00025998779)
- Data Point: (0.6951928, 0.00025998393)
- Data Point: (1.274275, 0.00025997819)
- Data Point: (2.3357215, 0.00025996907)
- Data Point: (4.2813324, 0.00025995329)
- Data Point: (7.8475997, 0.00025992467)
- Data Point: (14.384499, 0.00025989276)

Data Point: (26.366509, 0.00025978642)
Data Point: (48.329302, 0.00025903344)
Data Point: (88.586679, 0.0002586222)
Data Point: (162.37767, 0.00013432217)
Data Point: (297.63514, 8.1547435e-006)
Data Point: (545.55948, 1.3663567e-007)
Data Point: (1,000, 4.5608744e-009)
Estimation Properties
Hyd. K-Function Estimation Method: Fredlund-Xing Function
Volume Water Content Function: Matl. 2 Surficial Overburden Layer
Hydraulic K Sat: 0.00026 ft/sec
Residual Water Content: 0.0495 ft^3/ft^3
Maximum: 1,000
Minimum: 0.01
Num. Points: 20

Matl. 3 Shallow Alluvial Deposits

Model: Hyd K Data Point Function
Function: X-Conductivity vs. Pore-Water Pressure
Curve Fit to Data: 100 %
Segment Curvature: 36 %
K-Saturation: 0.00174
Data Points: Matric Suction (psf), X-Conductivity (ft/sec)
Data Point: (0.01, 0.00174)
Data Point: (0.018329807, 0.0017399903)
Data Point: (0.033598183, 0.0017399803)
Data Point: (0.061584821, 0.0017399698)
Data Point: (0.11288379, 0.0017399581)
Data Point: (0.20691381, 0.0017399444)
Data Point: (0.37926902, 0.0017399269)
Data Point: (0.6951928, 0.0017399027)
Data Point: (1.274275, 0.0017398661)
Data Point: (2.3357215, 0.0017398072)
Data Point: (4.2813324, 0.0017397038)
Data Point: (7.8475997, 0.0017395137)
Data Point: (14.384499, 0.0017393299)
Data Point: (26.366509, 0.001738599)
Data Point: (48.329302, 0.0017325399)
Data Point: (88.586679, 0.0017147796)
Data Point: (162.37767, 0.00075235037)
Data Point: (297.63514, 3.3418521e-005)
Data Point: (545.55948, 6.307291e-007)
Data Point: (1,000, 2.3757014e-008)
Estimation Properties
Hyd. K-Function Estimation Method: Fredlund-Xing Function
Volume Water Content Function: Matl. 3 Shallow Alluvial Deposits
Hydraulic K Sat: 0.00174 ft/sec
Residual Water Content: 0.0495 ft^3/ft^3
Maximum: 1,000
Minimum: 0.01

Num. Points: 20

Matl. 5 Soil Cement Armoring

Model: Hyd K Data Point Function
Function: X-Conductivity vs. Pore-Water Pressure
Curve Fit to Data: 100 %
Segment Curvature: 44 %
K-Saturation: 1.31e-005
Data Points: Matric Suction (psf), X-Conductivity (ft/sec)
Data Point: (0.01, 1.31e-005)
Data Point: (0.018329807, 1.3099927e-005)
Data Point: (0.033598183, 1.3099852e-005)
Data Point: (0.061584821, 1.3099772e-005)
Data Point: (0.11288379, 1.3099684e-005)
Data Point: (0.20691381, 1.3099581e-005)
Data Point: (0.37926902, 1.309945e-005)
Data Point: (0.6951928, 1.3099268e-005)
Data Point: (1.274275, 1.3098992e-005)
Data Point: (2.3357215, 1.3098549e-005)
Data Point: (4.2813324, 1.309777e-005)
Data Point: (7.8475997, 1.3096339e-005)
Data Point: (14.384499, 1.3094955e-005)
Data Point: (26.366509, 1.3089452e-005)
Data Point: (48.329302, 1.3043835e-005)
Data Point: (88.586679, 1.2910123e-005)
Data Point: (162.37767, 5.664247e-006)
Data Point: (297.63514, 2.5159921e-007)
Data Point: (545.55948, 4.7485927e-009)
Data Point: (1,000, 1.7886028e-010)
Estimation Properties
Hyd. K-Function Estimation Method: Fredlund-Xing Function
Volume Water Content Function: Matl. 5 Soil Cement Armoring
Hydraulic K Sat: 1.31e-005 ft/sec
Residual Water Content: 0.03 ft^3/ft^3
Maximum: 1,000
Minimum: 0.01
Num. Points: 20

Matl. 8 Filter Sand

Model: Hyd K Data Point Function
Function: X-Conductivity vs. Pore-Water Pressure
Curve Fit to Data: 100 %
Segment Curvature: 44 %
K-Saturation: 0.000925
Data Points: Matric Suction (psf), X-Conductivity (ft/sec)
Data Point: (0.01, 0.000925)
Data Point: (0.018329807, 0.00092499993)
Data Point: (0.033598183, 0.00092499981)
Data Point: (0.061584821, 0.0009249996)
Data Point: (0.11288379, 0.00092499919)

Data Point: (0.20691381, 0.00092499854)
Data Point: (0.37926902, 0.00092499785)
Data Point: (0.6951928, 0.00092499117)
Data Point: (1.274275, 0.00092498427)
Data Point: (2.3357215, 0.00092515575)
Data Point: (4.2813324, 0.00092444336)
Data Point: (7.8475997, 0.00092025484)
Data Point: (14.384499, 0.00086768248)
Data Point: (26.366509, 0.00022215817)
Data Point: (48.329302, 5.6149022e-006)
Data Point: (88.586679, 9.4931606e-008)
Data Point: (162.37767, 4.4270536e-009)
Data Point: (297.63514, 6.3580973e-010)
Data Point: (545.55948, 1.1244323e-010)
Data Point: (1,000, 1.0762229e-011)

Estimation Properties
Hyd. K-Function Estimation Method: Fredlund-Xing Function
Volume Water Content Function: Matl. 8 Filter Sand (C33)
Hydraulic K Sat: 0.000925 ft/sec
Residual Water Content: 0.03 ft^3/ft^3
Maximum: 1,000
Minimum: 0.01
Num. Points: 20

Vol. Water Content Functions

Matl. 3 Shallow Alluvial Deposits

Model: Vol WC Data Point Function
Function: Vol. Water Content vs. Pore-Water Pressure
Mv: 2.5e-006 /psf
Saturated Water Content: 0.30020276 ft^3/ft^3
Residual Water Content: 0.030020276 ft^3/ft^3
Curve Fit to Data: 100 %
Segment Curvature: 40 %
Porosity: 0.30020276
Data Points: Matric Suction (psf), Vol. Water Content (ft^3/ft^3)
Data Point: (0.01, 0.29987196)
Data Point: (0.018329807, 0.29987196)
Data Point: (0.033598183, 0.29987196)
Data Point: (0.061584821, 0.29987196)
Data Point: (0.11288379, 0.29987196)
Data Point: (0.20691381, 0.29987196)
Data Point: (0.37926902, 0.29987196)
Data Point: (0.6951928, 0.29987196)
Data Point: (1.274275, 0.29987196)
Data Point: (2.3357215, 0.29987196)
Data Point: (4.2813324, 0.29987196)
Data Point: (7.8475997, 0.29987196)
Data Point: (14.384499, 0.29987196)

Data Point: (26.366509, 0.29987196)
Data Point: (48.329302, 0.29987196)
Data Point: (88.586679, 0.29667682)
Data Point: (162.37767, 0.20150036)
Data Point: (297.63514, 0.085811521)
Data Point: (545.55948, 0.049379583)
Data Point: (1,000, 0.039446735)
Estimation Properties
Vol. WC Estimation Method: Grain Size Function
Saturated Water Content: 0.3 ft^3/ft^3
Sample Material: Clay
Liquid Limit: 0 %
Diameter at 10% passing: 0.07000000000000001
Diameter at 60% passing: 0.2
Maximum: 1,000
Minimum: 0.01
Num. Points: 20

Matl. 1 Embankment Fill from Borrow Areas

Model: Vol WC Data Point Function
Function: Vol. Water Content vs. Pore-Water Pressure
Mv: 2.5e-006 /psf
Saturated Water Content: 0.30020276 ft^3/ft^3
Residual Water Content: 0.030020276 ft^3/ft^3
Curve Fit to Data: 100 %
Segment Curvature: 40 %
Porosity: 0.30020276
Data Points: Matric Suction (psf), Vol. Water Content (ft^3/ft^3)
Data Point: (0.01, 0.29987196)
Data Point: (0.018329807, 0.29987196)
Data Point: (0.033598183, 0.29987196)
Data Point: (0.061584821, 0.29987196)
Data Point: (0.11288379, 0.29987196)
Data Point: (0.20691381, 0.29987196)
Data Point: (0.37926902, 0.29987196)
Data Point: (0.6951928, 0.29987196)
Data Point: (1.274275, 0.29987196)
Data Point: (2.3357215, 0.29987196)
Data Point: (4.2813324, 0.29987196)
Data Point: (7.8475997, 0.29987196)
Data Point: (14.384499, 0.29987196)
Data Point: (26.366509, 0.29987196)
Data Point: (48.329302, 0.29987196)
Data Point: (88.586679, 0.29667682)
Data Point: (162.37767, 0.20150036)
Data Point: (297.63514, 0.085811521)
Data Point: (545.55948, 0.049379583)
Data Point: (1,000, 0.039446735)
Estimation Properties
Vol. WC Estimation Method: Grain Size Function

Saturated Water Content: 0.3 ft^3/ft^3
Sample Material: Clay
Liquid Limit: 0 %
Diameter at 10% passing: 0.07000000000000001
Diameter at 60% passing: 0.2
Maximum: 1,000
Minimum: 0.01
Num. Points: 20

Matl. 2 Surficial Overburden Layer

Model: Vol WC Data Point Function
Function: Vol. Water Content vs. Pore-Water Pressure
Mv: 2.5e-006 /psf
Saturated Water Content: 0.30132774 ft^3/ft^3
Residual Water Content: 0.030132774 ft^3/ft^3
Curve Fit to Data: 100 %
Segment Curvature: 40 %
Porosity: 0.30132774
Data Points: Matric Suction (psf), Vol. Water Content (ft^3/ft^3)
Data Point: (0.01, 0.30110223)
Data Point: (0.018329807, 0.30110223)
Data Point: (0.033598183, 0.30110223)
Data Point: (0.061584821, 0.30110223)
Data Point: (0.11288379, 0.30110223)
Data Point: (0.20691381, 0.30110223)
Data Point: (0.37926902, 0.30110223)
Data Point: (0.6951928, 0.30110223)
Data Point: (1.274275, 0.30110223)
Data Point: (2.3357215, 0.30110223)
Data Point: (4.2813324, 0.30110223)
Data Point: (7.8475997, 0.30110223)
Data Point: (14.384499, 0.30110223)
Data Point: (26.366509, 0.30110223)
Data Point: (48.329302, 0.30110223)
Data Point: (88.586679, 0.29938489)
Data Point: (162.37767, 0.21986255)
Data Point: (297.63514, 0.094851578)
Data Point: (545.55948, 0.051777012)
Data Point: (1,000, 0.040605935)
Estimation Properties
Vol. WC Estimation Method: Grain Size Function
Saturated Water Content: 0.3 ft^3/ft^3
Sample Material: Clay
Liquid Limit: 0 %
Diameter at 10% passing: 0.07000000000000001
Diameter at 60% passing: 0.18
Maximum: 1,000
Minimum: 0.01
Num. Points: 20

Matl. 8 Filter Sand (C33)

Model: Vol WC Data Point Function
Function: Vol. Water Content vs. Pore-Water Pressure
Mv: 8e-007 /psf
Saturated Water Content: 0.30081752 ft^3/ft^3
Residual Water Content: 0.030081752 ft^3/ft^3
Curve Fit to Data: 100 %
Segment Curvature: 48 %
Porosity: 0.30081752
Data Points: Matric Suction (psf), Vol. Water Content (ft^3/ft^3)
Data Point: (0.01, 0.30028388)
Data Point: (0.018329807, 0.30028388)
Data Point: (0.033598183, 0.30028388)
Data Point: (0.061584821, 0.30028388)
Data Point: (0.11288379, 0.30028388)
Data Point: (0.20691381, 0.30028388)
Data Point: (0.37926902, 0.30028388)
Data Point: (0.6951928, 0.30028388)
Data Point: (1.274275, 0.30028388)
Data Point: (2.3357215, 0.30028388)
Data Point: (4.2813324, 0.30028388)
Data Point: (7.8475997, 0.30028388)
Data Point: (14.384499, 0.28112842)
Data Point: (26.366509, 0.15065712)
Data Point: (48.329302, 0.048430554)
Data Point: (88.586679, 0.021674388)
Data Point: (162.37767, 0.016081301)
Data Point: (297.63514, 0.013674367)
Data Point: (545.55948, 0.011770874)
Data Point: (1,000, 0.010084825)
Estimation Properties
Vol. WC Estimation Method: Grain Size Function
Saturated Water Content: 0.3 ft^3/ft^3
Sample Material: Gravel
Liquid Limit: 0 %
Diameter at 10% passing: 0.38
Diameter at 60% passing: 1.6
Maximum: 1,000
Minimum: 0.01
Num. Points: 20

Mat. 6 Fine Drainage Gravel (No 89)

Model: Vol WC Data Point Function
Function: Vol. Water Content vs. Pore-Water Pressure
Mv: 4e-007 /psf
Saturated Water Content: 0.21947752 ft^3/ft^3
Residual Water Content: 0.021947752 ft^3/ft^3
Curve Fit to Data: 100 %
Segment Curvature: 48 %
Porosity: 0.21947752

Data Points: Matric Suction (psf), Vol. Water Content (ft^3/ft^3)
- Data Point: (0.01, 0.21916427)
- Data Point: (0.018329807, 0.21916427)
- Data Point: (0.033598183, 0.21916427)
- Data Point: (0.061584821, 0.21916427)
- Data Point: (0.11288379, 0.21916427)
- Data Point: (0.20691381, 0.21916427)
- Data Point: (0.37926902, 0.21916427)
- Data Point: (0.6951928, 0.21916427)
- Data Point: (1.274275, 0.21916427)
- Data Point: (2.3357215, 0.21916427)
- Data Point: (4.2813324, 0.20182012)
- Data Point: (7.8475997, 0.090949254)
- Data Point: (14.384499, 0.021737158)
- Data Point: (26.366509, 0.0080845337)
- Data Point: (48.329302, 0.0057554944)
- Data Point: (88.586679, 0.0048689464)
- Data Point: (162.37767, 0.0041947283)
- Data Point: (297.63514, 0.0036057207)
- Data Point: (545.55948, 0.0030872724)
- Data Point: (1,000, 0.002632805)

Estimation Properties
- Vol. WC Estimation Method: Grain Size Function
- Saturated Water Content: 0.21875 ft^3/ft^3
- Sample Material: Clay
- Liquid Limit: 0 %
- Diameter at 10% passing: 3.5
- Diameter at 60% passing: 7.1
- Maximum: 1,000
- Minimum: 0.01
- Num. Points: 20

Matl. 4 Deeper Marine Deposits

Model: Vol WC Data Point Function

Function: Vol. Water Content vs. Pore-Water Pressure
- Mv: 2.5e-006 /psf
- Saturated Water Content: 0.30154597 ft^3/ft^3
- Residual Water Content: 0.030154597 ft^3/ft^3
- Curve Fit to Data: 100 %
- Segment Curvature: 40 %

Porosity: 0.30154597

Data Points: Matric Suction (psf), Vol. Water Content (ft^3/ft^3)
- Data Point: (0.01, 0.30100508)
- Data Point: (0.018329807, 0.30100508)
- Data Point: (0.033598183, 0.30100508)
- Data Point: (0.061584821, 0.30100508)
- Data Point: (0.11288379, 0.30100508)
- Data Point: (0.20691381, 0.30100508)
- Data Point: (0.37926902, 0.30100508)
- Data Point: (0.6951928, 0.30100508)

Data Point: (1.274275, 0.30100508)
Data Point: (2.3357215, 0.30100508)
Data Point: (4.2813324, 0.30100508)
Data Point: (7.8475997, 0.30100508)
Data Point: (14.384499, 0.30100508)
Data Point: (26.366509, 0.30100508)
Data Point: (48.329302, 0.30100508)
Data Point: (88.586679, 0.30100508)
Data Point: (162.37767, 0.2887592)
Data Point: (297.63514, 0.17412515)
Data Point: (545.55948, 0.076942285)
Data Point: (1,000, 0.051397358)

Estimation Properties
Vol. WC Estimation Method: Grain Size Function
Saturated Water Content: 0.3 ft^3/ft^3
Sample Material: Clay
Liquid Limit: 0 %
Diameter at 10% passing: 0.06
Diameter at 60% passing: 0.11
Maximum: 1,000
Minimum: 0.01
Num. Points: 20

Matl. 5 Soil Cement Armoring

Model: Vol WC Data Point Function
Function: Vol. Water Content vs. Pore-Water Pressure
Mv: 2.5e-006 /psf
Saturated Water Content: 0.30020276 ft^3/ft^3
Residual Water Content: 0.030020276 ft^3/ft^3
Curve Fit to Data: 100 %
Segment Curvature: 40 %
Porosity: 0.30020276
Data Points: Matric Suction (psf), Vol. Water Content (ft^3/ft^3)
Data Point: (0.01, 0.29987196)
Data Point: (0.018329807, 0.29987196)
Data Point: (0.033598183, 0.29987196)
Data Point: (0.061584821, 0.29987196)
Data Point: (0.11288379, 0.29987196)
Data Point: (0.20691381, 0.29987196)
Data Point: (0.37926902, 0.29987196)
Data Point: (0.6951928, 0.29987196)
Data Point: (1.274275, 0.29987196)
Data Point: (2.3357215, 0.29987196)
Data Point: (4.2813324, 0.29987196)
Data Point: (7.8475997, 0.29987196)
Data Point: (14.384499, 0.29987196)
Data Point: (26.366509, 0.29987196)
Data Point: (48.329302, 0.29987196)
Data Point: (88.586679, 0.29667682)
Data Point: (162.37767, 0.20150036)

Data Point: (297.63514, 0.085811521)
Data Point: (545.55948, 0.049379583)
Data Point: (1,000, 0.039446735)

Estimation Properties

Vol. WC Estimation Method: Grain Size Function
Saturated Water Content: 0.3 ft^3/ft^3
Sample Material: Clay
Liquid Limit: 0 %
Diameter at 10% passing: 0.07000000000000001
Diameter at 60% passing: 0.2
Maximum: 1,000
Minimum: 0.01
Num. Points: 20

Points

	X (ft)	Y (ft)
Point 1	-53.5	21
Point 2	-14.5	21
Point 3	-14.5	30
Point 4	-11.5	30
Point 5	-11.5	18
Point 6	-7	36.5
Point 7	-7	35.5
Point 8	6.8	35.5
Point 9	14	33
Point 10	13.7	32.1
Point 11	48.6	20.5
Point 12	51.2	18
Point 13	52.0033	19.4828
Point 14	51.9	19.4
Point 15	51.8636	19.2065
Point 16	52.097	19.0075
Point 17	52.3031	19.0832
Point 18	52.3561	19.2916
Point 19	52.3	19.4
Point 20	52.1797	19.4906
Point 21	59.3	18
Point 22	56.3	19
Point 23	54.8	19.5
Point 24	58	19.5
Point 25	7	36.5
Point 26	59.3	16.5
Point 27	67.3	16.5
Point 28	67.3	14.5

Point 29	69.3	14.5
Point 30	69.3	16.5
Point 31	69.3	18
Point 32	62.5	18
Point 33	59.5	19
Point 34	-90	18
Point 35	-90	16.5
Point 36	100	18
Point 37	100	16.5
Point 38	100	-11.4
Point 39	-90	-11.4
Point 40	100	-111.5
Point 41	-90	-111.5
Point 42	-139	18
Point 43	-127	22
Point 44	-113	22
Point 45	-101	18
Point 46	-180	18
Point 47	-180	16.5
Point 48	-180	-11.5
Point 49	-180	-111.5
Point 50	1,100	18
Point 51	1,100	16.5
Point 52	1,100	-11.5

Point 53	1,100	-111.5
Point 54	52.3546	19.1839
Point 55	51.9487	19.066
Point 56	52.2227	19.0254
Point 57	-1,200	-11.5
Point 58	-1,200	-111.5
Point 59	-53.5	19
Point 60	-12.5	19
Point 61	-12.5	20
Point 62	-53.5	20
Point 63	-77	18
Point 64	-77	16.5
Point 65	-1,200	16.5
Point 66	-234.5	16.5
Point 67	-290	-2
Point 68	-320	-2
Point 69	-375.5	16.5
Point 70	-230	18
Point 71	-1,200	18
Point 72	-380	18
Point 73	-365	13
Point 74	-245	13
Point 75	41.5	25
Point 76	-52.5	21

Point 77	-52.5	20
Point 78	-11.5	19
Point 79	-52.5	19
Point 80	-52.5	18
Point 81	-52.5	16.5
Point 82	-62.5	18
Point 83	-53.5	18
Point 84	-62.5	16.5
Point 85	-77	17.25
Point 86	-62.5	17.25

Lines

	Start Point	End Point	Hydraulic Boundary
Line 1	2	3	
Line 2	3	4	
Line 3	1	6	Drainage
Line 4	6	7	
Line 5	7	8	
Line 6	8	9	
Line 7	9	10	
Line 8	10	11	
Line 9	11	12	
Line 10	12	5	
Line 11	13	14	
Line 12	14	15	
Line 13	18	19	
Line 14	19	20	
Line 15	20	13	
Line 16	12	21	
Line 17	21	22	
Line 18	22	16	
Line 19	20	23	
Line 20	23	9	
Line 21	23	24	

Line 22	25	6	
Line 23	21	26	
Line 24	26	27	
Line 25	27	28	
Line 26	28	29	
Line 27	29	30	
Line 28	30	31	
Line 29	31	32	Seepage Canal at Elev. 13ft
Line 30	32	33	
Line 31	33	22	
Line 32	35	34	
Line 33	31	36	Seepage Canal at Elev. 13ft
Line 34	36	37	
Line 35	37	30	
Line 36	37	38	
Line 37	38	39	
Line 38	39	35	
Line 39	38	40	
Line 40	40	41	
Line 41	41	39	
Line 42	43	44	
Line 43	44	45	Drainage
Line 44	45	42	
Line 45	46	42	Drainage
Line 46	45	34	Drainage
Line 47	35	47	
Line 48	47	46	
Line 49	39	48	
Line 50	48	47	
Line 51	41	49	
Line 52	49	48	
Line 53	36	50	Seepage Canal at Elev. 13ft
Line 54	50	51	
Line 55	51	37	
Line 56	51	52	
Line 57	52	38	
Line 58	52	53	
Line 59	53	40	
Line 60	23	22	
Line 61	24	33	
Line 62	17	54	

Line 63	54	18	
Line 64	15	55	
Line 65	55	16	
Line 66	16	56	
Line 67	56	17	
Line 68	48	57	
Line 69	49	58	
Line 70	58	57	
Line 71	60	61	
Line 72	64	35	
Line 73	63	34	Drainage
Line 74	65	57	
Line 75	47	66	
Line 76	67	68	Seepage Canal at Elev. 13ft
Line 77	69	65	
Line 78	66	70	Drainage
Line 79	70	46	Drainage
Line 80	71	65	
Line 81	69	72	Drainage
Line 82	72	71	Drainage
Line 83	68	73	Seepage Canal at Elev. 13ft
Line 84	73	69	Drainage
Line 85	66	74	Drainage
Line 86	74	67	Seepage Canal at Elev. 13ft

Line 87	24	75	
Line 88	75	25	
Line 89	1	76	
Line 90	76	2	
Line 91	61	77	
Line 92	77	62	
Line 93	76	77	
Line 94	62	1	
Line 95	4	78	
Line 96	78	5	
Line 97	78	60	
Line 98	59	79	
Line 99	79	60	
Line 100	5	80	
Line 101	80	79	
Line 102	26	81	
Line 103	81	80	
Line 104	81	84	
Line 105	84	64	
Line 106	82	83	
Line 107	83	59	
Line 108	64	85	
Line 109	85	63	
Line 110	84	86	

Line 111	86	82	
Line 112	86	85	
Line 113	82	63	Drainage
Line 114	79	77	
Line 115	59	62	Drainage
Line 116	42	43	

Regions

	Material	Points	Area (ft²)
Region 1	Matl. 1 - Embankment Material	1,6,7,8,9,10,11,12,5,78,4,3,2,76	993.93
Region 2		13,14,15,55,16,56,17,54,18,19,20	0.18474
Region 3	Matl. 8 - Filter Sand	9,10,11,12,21,22,16,55,15,14,13,20,23	49.637
Region 4	Matl. 5 - Soil Cement Armoring	6,7,8,9,23,24,75,25	69.1
Region 5	Matl. 5 - Soil Cement Armoring	22,21,26,27,28,29,30,31,32,33	22.2
Region 6	Matl. 2 - Surficial Overburden Layer	31,36,37,30	46.05
Region 7	Matl. 4 - Deeper Marine Deposits	39,38,40,41	19,019
Region 8	Matl. 1 - Embankment Material	42,43,44,45	104
Region 9	Matl. 2 - Surficial Overburden Layer	46,42,45,34,35,47	135
Region 10	Matl. 3 - Shallow Alluvial Deposits	47,35,39,48	2,515.5
Region 11	Matl. 4 - Deeper Marine Deposits	48,39,41,49	9,004.5
Region 12	Matl. 2 - Surficial Overburden Layer	36,50,51,37	1,500
Region 13	Matl. 3 - Shallow Alluvial Deposits	37,51,52,38	27,950
Region 14	Matl. 4 - Deeper Marine Deposits	38,52,53,40	1.0005e+005
Region 15	Matl. 8 - Filter Sand	20,23,22,16,56,17,54,18,19	1.5978
Region 16	Matl. 5 - Soil Cement Armoring	23,24,33,22	1.6
Region 17	Matl. 4 - Deeper Marine Deposits	57,48,49,58	1.02e+005
Region 18	Matl. 3 - Shallow Alluvial Deposits	35,39,38,37,30,29,28,27,26,81,84,64	5,297
		34,35,64,85,63	19.5

Region 19	Matl. 2 - Surficial Overburden Layer		
Region 20	Matl. 3 - Shallow Alluvial Deposits	65,57,48,47,66,74,67,68,73,69	26,978
Region 21	Matl. 2 - Surficial Overburden Layer	66,70,46,47	78.375
Region 22	Matl. 2 - Surficial Overburden Layer	71,65,69,72	1,233.4
Region 23	Matl. 9 Concrete Outfall Works	76,77,62,1	1
Region 24	Matl. 8 - Filter Sand	76,2,3,4,78,60,61,77	69
Region 25	Matl. 8 - Filter Sand	79,60,78,5,80	41
Region 26	Matl. 2 - Surficial Overburden Layer	80,5,12,21,26,81	167.7
Region 27	Matl. 9 Concrete Outfall Works	82,83,59,79,80,81,84,86	16
Region 28	Matl. 2 - Surficial Overburden Layer	85,64,84,86	10.875
Region 29	Matl. 2 - Surficial Overburden Layer	63,85,86,82	10.875
Region 30	Matl. 6 - Fine Drainage Gravel	77,61,60,79	40
Region 31	Matl. 6 - Fine Drainage Gravel	62,77,79,59	1

Steady-State Seepage LT SSS

Report generated using GeoStudio 2012. Copyright © 1991-2013 GEO-SLOPE International Ltd.

File Information

Title: LOWP PIR Analysis Section B
Created By: Viessman, Michael W CIV USARMY CESAJ (US)
Last Edited By: Viessman, Michael W CIV USARMY CESAJ (US)
Revision Number: 517
File Version: 8.2
Tool Version: 8.12.3.7901
Date: 8/25/2018
Time: 3:05:08 PM
File Name: Section B EOC USP no toe drain.gsz
Directory: C:\Users\k3engmwv\Documents\LOWP\FY17-18 PIR Work\SEEP and SLOPEW Files\

Project Settings

Length(L) Units: feet
Time(t) Units: Seconds
Force(F) Units: lbf
Pressure(p) Units: psf
Mass(M) Units: lbs
Mass Flux Units: lbs/sec
Unit Weight of Water: 62.4 pcf
View: 2D
Element Thickness: 1

Analysis Settings

Steady-State Seepage LT SSS

Description: U/S NP pool, no toe drain, canal wse at 13ft
Kind: SEEP/W
Method: Steady-State
Settings
    Include Air Flow: No
Control
    Apply Runoff: Yes
Convergence
    Maximum Number of Iterations: 1,000
    Minimum Pressure Head Difference: 0.005
    Significant Digits: 2
    Max # of Reviews: 10
    Hydraulic Under-Relaxation Criteria
        Under-Relaxation Initial Rate: 1
        Under-Relaxation Min. Rate: 0.1

Under-Relaxation Reduction Rate: 0.65
Under-Relaxation Iterations: 10
Equation Solver: Parallel Direct
Time
Starting Time: 0 sec
Duration: 0 sec
Ending Time: 0 sec

Materials

Matl. 1 - Embankment Material

Model: Saturated / Unsaturated
Hydraulic
K-Function: Matl. 1 Embankment Material
Ky'/Kx' Ratio: 0.25
Rotation: 0 °
Vol. WC. Function: Matl. 1 Embankment Fill from Borrow Areas

Matl. 2 - Surficial Overburden Layer

Model: Saturated / Unsaturated
Hydraulic
K-Function: Matl. 2 Surficial Overburden Layer
Ky'/Kx' Ratio: 0.1
Rotation: 0 °
Vol. WC. Function: Matl. 2 Surficial Overburden Layer

Matl. 3 - Shallow Alluvial Deposits

Model: Saturated / Unsaturated
Hydraulic
K-Function: Matl. 3 Shallow Alluvial Deposits
Ky'/Kx' Ratio: 0.1
Rotation: 0 °
Vol. WC. Function: Matl. 3 Shallow Alluvial Deposits

Matl. 4 - Deeper Marine Deposits

Model: Saturated / Unsaturated
Hydraulic
K-Function: Matl. 4 Deeper Marine Deposits
Ky'/Kx' Ratio: 0.1
Rotation: 0 °
Vol. WC. Function: Matl. 4 Deeper Marine Deposits

Matl. 5 - Soil Cement Armoring

Model: Saturated / Unsaturated
Hydraulic
K-Function: Matl. 5 Soil Cement Armoring
Ky'/Kx' Ratio: 1
Rotation: 0 °
Vol. WC. Function: Matl. 5 Soil Cement Armoring

Matl. 6 - Fine Drainage Gravel

Model: Saturated / Unsaturated
Hydraulic
K-Function: Matl. 6 Fine Drainage Gravel
Ky'/Kx' Ratio: 1
Rotation: 0 °
Vol. WC. Function: Mat. 6 Fine Drainage Gravel (No 89)

Matl. 8 - Filter Sand

Model: Saturated / Unsaturated
Hydraulic
K-Function: Matl. 8 Filter Sand
Ky'/Kx' Ratio: 1
Rotation: 0 °
Vol. WC. Function: Matl. 8 Filter Sand (C33)

Matl. 9 Concrete Outfall Works

Model: Saturated Only
Hydraulic
K-Sat: 3.28e-010 ft/sec
Ky'/Kx' Ratio: 1
Rotation: 0 °
Volumetric Water Content: 0.3 ft^3/ft^3
Mv: 1e-008 /psf

Boundary Conditions

K-05 WAF Normal Pool at Elev. 25ft

Type: Head (H) 25
Review: No

Drainage

Type: Total Flux (Q) 0
Review: Yes

Seepage Canal at Elev. 13ft

Type: Head (H) 13
Review: No

Flux Sections

Flux Section 1

Coordinates
Coordinate: (-53.387097, 20.026507) ft
Coordinate: (-53.387097, 18.965214) ft

Flux Section 2

Coordinates
Coordinate: (-77.145669, 18.00689) ft
Coordinate: (-77.130906, 16.397638) ft
Coordinate: (-62.322835, 16.373031) ft
Coordinate: (-62.322835, 16.63878) ft

Flux Section 3

Coordinates
Coordinate: (0, 36.6) ft
Coordinate: (0, -112.3) ft

Flux Section 4

Coordinates
Coordinate: (-382.8, 18.2) ft
Coordinate: (-319.7, -3.4) ft
Coordinate: (-289.2, -3.3) ft
Coordinate: (-228.6, 17.7) ft

Flux Section 5

Coordinates
Coordinate: (-399.8, 18) ft
Coordinate: (-400.1, -112.4) ft

K Functions

Matl. 1 Embankment Material

Model: Hyd K Data Point Function
Function: X-Conductivity vs. Pore-Water Pressure
Curve Fit to Data: 100 %
Segment Curvature: 36 %
K-Saturation: 0.000131
Data Points: Matric Suction (psf), X-Conductivity (ft/sec)
Data Point: (0.01, 0.000131)
Data Point: (0.018329807, 0.00013099927)
Data Point: (0.033598183, 0.00013099852)
Data Point: (0.061584821, 0.00013099772)
Data Point: (0.11288379, 0.00013099684)
Data Point: (0.20691381, 0.00013099581)
Data Point: (0.37926902, 0.0001309945)
Data Point: (0.6951928, 0.00013099268)
Data Point: (1.274275, 0.00013098992)
Data Point: (2.3357215, 0.00013098549)
Data Point: (4.2813324, 0.0001309777)
Data Point: (7.8475997, 0.00013096339)
Data Point: (14.384499, 0.00013094955)
Data Point: (26.366509, 0.00013089452)
Data Point: (48.329302, 0.00013043835)
Data Point: (88.586679, 0.00012910123)
Data Point: (162.37767, 5.664247e-005)

Data Point: (297.63514, 2.5159921e-006)
Data Point: (545.55948, 4.7485927e-008)
Data Point: (1,000, 1.7886028e-009)
Estimation Properties
Hyd. K-Function Estimation Method: Fredlund-Xing Function
Volume Water Content Function: Matl. 1 Embankment Fill from Borrow Areas
Hydraulic K Sat: 0.000131 ft/sec
Residual Water Content: 0.0495 ft^3/ft^3
Maximum: 1,000
Minimum: 0.01
Num. Points: 20

Matl. 4 Deeper Marine Deposits

Model: Hyd K Data Point Function
Function: X-Conductivity vs. Pore-Water Pressure
Curve Fit to Data: 100 %
Segment Curvature: 44 %
K-Saturation: 0.000984
Data Points: Matric Suction (psf), X-Conductivity (ft/sec)
Data Point: (0.01, 0.000984)
Data Point: (0.018329807, 0.00098398585)
Data Point: (0.033598183, 0.00098397151)
Data Point: (0.061584821, 0.00098395679)
Data Point: (0.11288379, 0.00098394139)
Data Point: (0.20691381, 0.00098392476)
Data Point: (0.37926902, 0.00098390584)
Data Point: (0.6951928, 0.00098388274)
Data Point: (1.274275, 0.00098385199)
Data Point: (2.3357215, 0.0009838074)
Data Point: (4.2813324, 0.00098373618)
Data Point: (7.8475997, 0.00098361453)
Data Point: (14.384499, 0.0009834543)
Data Point: (26.366509, 0.00098304118)
Data Point: (48.329302, 0.00098089274)
Data Point: (88.586679, 0.00098804841)
Data Point: (162.37767, 0.00089693201)
Data Point: (297.63514, 0.00029836287)
Data Point: (545.55948, 5.5741791e-006)
Data Point: (1,000, 8.8545842e-008)
Estimation Properties
Hyd. K-Function Estimation Method: Fredlund-Xing Function
Volume Water Content Function: Matl. 4 Deeper Marine Deposits
Hydraulic K Sat: 0.000984 ft/sec
Residual Water Content: 0.03 ft^3/ft^3
Maximum: 1,000
Minimum: 0.01
Num. Points: 20

Matl. 6 Fine Drainage Gravel

Model: Hyd K Data Point Function

Function: X-Conductivity vs. Pore-Water Pressure
Curve Fit to Data: 100 %
Segment Curvature: 40 %
K-Saturation: 0.0116
Data Points: Matric Suction (psf), X-Conductivity (ft/sec)
Data Point: (0.01, 0.0116)
Data Point: (0.018329807, 0.011599999)
Data Point: (0.033598183, 0.011599999)
Data Point: (0.061584821, 0.011599997)
Data Point: (0.11288379, 0.011599992)
Data Point: (0.20691381, 0.011599991)
Data Point: (0.37926902, 0.011600028)
Data Point: (0.6951928, 0.011599657)
Data Point: (1.274275, 0.011599409)
Data Point: (2.3357215, 0.011606742)
Data Point: (4.2813324, 0.01023118)
Data Point: (7.8475997, 0.0019666911)
Data Point: (14.384499, 3.3083667e-005)
Data Point: (26.366509, 3.5079262e-007)
Data Point: (48.329302, 1.0209264e-008)
Data Point: (88.586679, 1.7809046e-009)
Data Point: (162.37767, 3.7872508e-010)
Data Point: (297.63514, 7.9282799e-011)
Data Point: (545.55948, 1.3312429e-011)
Data Point: (1,000, 1.2335483e-012)
Estimation Properties
Hyd. K-Function Estimation Method: Fredlund-Xing Function
Volume Water Content Function: Mat. 6 Fine Drainage Gravel (No 89)
Hydraulic K Sat: 0.0116 ft/sec
Residual Water Content: 0.042 ft^3/ft^3
Maximum: 1,000
Minimum: 0.01
Num. Points: 20

Matl. 2 Surficial Overburden Layer

Model: Hyd K Data Point Function
Function: X-Conductivity vs. Pore-Water Pressure
Curve Fit to Data: 100 %
Segment Curvature: 36 %
K-Saturation: 0.00026
Data Points: Matric Suction (psf), X-Conductivity (ft/sec)
Data Point: (0.01, 0.00026)
Data Point: (0.018329807, 0.00025999835)
Data Point: (0.033598183, 0.00025999664)
Data Point: (0.061584821, 0.00025999485)
Data Point: (0.11288379, 0.00025999288)
Data Point: (0.20691381, 0.00025999062)
Data Point: (0.37926902, 0.00025998779)
Data Point: (0.6951928, 0.00025998393)
Data Point: (1.274275, 0.00025997819)

Data Point: (2.3357215, 0.00025996907)
Data Point: (4.2813324, 0.00025995329)
Data Point: (7.8475997, 0.00025992467)
Data Point: (14.384499, 0.00025989276)
Data Point: (26.366509, 0.00025978642)
Data Point: (48.329302, 0.00025903344)
Data Point: (88.586679, 0.0002586222)
Data Point: (162.37767, 0.00013432217)
Data Point: (297.63514, 8.1547435e-006)
Data Point: (545.55948, 1.3663567e-007)
Data Point: (1,000, 4.5608744e-009)

Estimation Properties
Hyd. K-Function Estimation Method: Fredlund-Xing Function
Volume Water Content Function: Matl. 2 Surficial Overburden Layer
Hydraulic K Sat: 0.00026 ft/sec
Residual Water Content: 0.0495 ft^3/ft^3
Maximum: 1,000
Minimum: 0.01
Num. Points: 20

Matl. 3 Shallow Alluvial Deposits

Model: Hyd K Data Point Function
Function: X-Conductivity vs. Pore-Water Pressure
Curve Fit to Data: 100 %
Segment Curvature: 36 %
K-Saturation: 0.00174
Data Points: Matric Suction (psf), X-Conductivity (ft/sec)
Data Point: (0.01, 0.00174)
Data Point: (0.018329807, 0.0017399903)
Data Point: (0.033598183, 0.0017399803)
Data Point: (0.061584821, 0.0017399698)
Data Point: (0.11288379, 0.0017399581)
Data Point: (0.20691381, 0.0017399444)
Data Point: (0.37926902, 0.0017399269)
Data Point: (0.6951928, 0.0017399027)
Data Point: (1.274275, 0.0017398661)
Data Point: (2.3357215, 0.0017398072)
Data Point: (4.2813324, 0.0017397038)
Data Point: (7.8475997, 0.0017395137)
Data Point: (14.384499, 0.0017393299)
Data Point: (26.366509, 0.001738599)
Data Point: (48.329302, 0.0017325399)
Data Point: (88.586679, 0.0017147796)
Data Point: (162.37767, 0.00075235037)
Data Point: (297.63514, 3.3418521e-005)
Data Point: (545.55948, 6.307291e-007)
Data Point: (1,000, 2.3757014e-008)

Estimation Properties
Hyd. K-Function Estimation Method: Fredlund-Xing Function
Volume Water Content Function: Matl. 3 Shallow Alluvial Deposits

Hydraulic K Sat: 0.00174 ft/sec
Residual Water Content: 0.0495 ft^3/ft^3
Maximum: 1,000
Minimum: 0.01
Num. Points: 20

Matl. 5 Soil Cement Armoring

Model: Hyd K Data Point Function
Function: X-Conductivity vs. Pore-Water Pressure
Curve Fit to Data: 100 %
Segment Curvature: 44 %
K-Saturation: 1.31e-005
Data Points: Matric Suction (psf), X-Conductivity (ft/sec)
Data Point: (0.01, 1.31e-005)
Data Point: (0.018329807, 1.3099927e-005)
Data Point: (0.033598183, 1.3099852e-005)
Data Point: (0.061584821, 1.3099772e-005)
Data Point: (0.11288379, 1.3099684e-005)
Data Point: (0.20691381, 1.3099581e-005)
Data Point: (0.37926902, 1.309945e-005)
Data Point: (0.6951928, 1.3099268e-005)
Data Point: (1.274275, 1.3098992e-005)
Data Point: (2.3357215, 1.3098549e-005)
Data Point: (4.2813324, 1.309777e-005)
Data Point: (7.8475997, 1.3096339e-005)
Data Point: (14.384499, 1.3094955e-005)
Data Point: (26.366509, 1.3089452e-005)
Data Point: (48.329302, 1.3043835e-005)
Data Point: (88.586679, 1.2910123e-005)
Data Point: (162.37767, 5.664247e-006)
Data Point: (297.63514, 2.5159921e-007)
Data Point: (545.55948, 4.7485927e-009)
Data Point: (1,000, 1.7886028e-010)
Estimation Properties
Hyd. K-Function Estimation Method: Fredlund-Xing Function
Volume Water Content Function: Matl. 5 Soil Cement Armoring
Hydraulic K Sat: 1.31e-005 ft/sec
Residual Water Content: 0.03 ft^3/ft^3
Maximum: 1,000
Minimum: 0.01
Num. Points: 20

Matl. 8 Filter Sand

Model: Hyd K Data Point Function
Function: X-Conductivity vs. Pore-Water Pressure
Curve Fit to Data: 100 %
Segment Curvature: 44 %
K-Saturation: 0.000925
Data Points: Matric Suction (psf), X-Conductivity (ft/sec)
Data Point: (0.01, 0.000925)

Data Point: (0.018329807, 0.00092499993)
Data Point: (0.033598183, 0.00092499981)
Data Point: (0.061584821, 0.0009249996)
Data Point: (0.11288379, 0.00092499919)
Data Point: (0.20691381, 0.00092499854)
Data Point: (0.37926902, 0.00092499785)
Data Point: (0.6951928, 0.00092499117)
Data Point: (1.274275, 0.00092498427)
Data Point: (2.3357215, 0.00092515575)
Data Point: (4.2813324, 0.00092444336)
Data Point: (7.8475997, 0.00092025484)
Data Point: (14.384499, 0.00086768248)
Data Point: (26.366509, 0.00022215817)
Data Point: (48.329302, 5.6149022e-006)
Data Point: (88.586679, 9.4931606e-008)
Data Point: (162.37767, 4.4270536e-009)
Data Point: (297.63514, 6.3580973e-010)
Data Point: (545.55948, 1.1244323e-010)
Data Point: (1,000, 1.0762229e-011)

Estimation Properties
Hyd. K-Function Estimation Method: Fredlund-Xing Function
Volume Water Content Function: Matl. 8 Filter Sand (C33)
Hydraulic K Sat: 0.000925 ft/sec
Residual Water Content: 0.03 ft^3/ft^3
Maximum: 1,000
Minimum: 0.01
Num. Points: 20

Vol. Water Content Functions

Matl. 3 Shallow Alluvial Deposits

Model: Vol WC Data Point Function
Function: Vol. Water Content vs. Pore-Water Pressure
Mv: 2.5e-006 /psf
Saturated Water Content: 0.30020276 ft^3/ft^3
Residual Water Content: 0.030020276 ft^3/ft^3
Curve Fit to Data: 100 %
Segment Curvature: 40 %
Porosity: 0.30020276
Data Points: Matric Suction (psf), Vol. Water Content (ft^3/ft^3)
Data Point: (0.01, 0.29987196)
Data Point: (0.018329807, 0.29987196)
Data Point: (0.033598183, 0.29987196)
Data Point: (0.061584821, 0.29987196)
Data Point: (0.11288379, 0.29987196)
Data Point: (0.20691381, 0.29987196)
Data Point: (0.37926902, 0.29987196)
Data Point: (0.6951928, 0.29987196)
Data Point: (1.274275, 0.29987196)

Data Point: (2.3357215, 0.29987196)
Data Point: (4.2813324, 0.29987196)
Data Point: (7.8475997, 0.29987196)
Data Point: (14.384499, 0.29987196)
Data Point: (26.366509, 0.29987196)
Data Point: (48.329302, 0.29987196)
Data Point: (88.586679, 0.29667682)
Data Point: (162.37767, 0.20150036)
Data Point: (297.63514, 0.085811521)
Data Point: (545.55948, 0.049379583)
Data Point: (1,000, 0.039446735)

Estimation Properties
Vol. WC Estimation Method: Grain Size Function
Saturated Water Content: 0.3 ft^3/ft^3
Sample Material: Clay
Liquid Limit: 0 %
Diameter at 10% passing: 0.07000000000000001
Diameter at 60% passing: 0.2
Maximum: 1,000
Minimum: 0.01
Num. Points: 20

Matl. 1 Embankment Fill from Borrow Areas

Model: Vol WC Data Point Function
Function: Vol. Water Content vs. Pore-Water Pressure
Mv: 2.5e-006 /psf
Saturated Water Content: 0.30020276 ft^3/ft^3
Residual Water Content: 0.030020276 ft^3/ft^3
Curve Fit to Data: 100 %
Segment Curvature: 40 %
Porosity: 0.30020276
Data Points: Matric Suction (psf), Vol. Water Content (ft^3/ft^3)
Data Point: (0.01, 0.29987196)
Data Point: (0.018329807, 0.29987196)
Data Point: (0.033598183, 0.29987196)
Data Point: (0.061584821, 0.29987196)
Data Point: (0.11288379, 0.29987196)
Data Point: (0.20691381, 0.29987196)
Data Point: (0.37926902, 0.29987196)
Data Point: (0.6951928, 0.29987196)
Data Point: (1.274275, 0.29987196)
Data Point: (2.3357215, 0.29987196)
Data Point: (4.2813324, 0.29987196)
Data Point: (7.8475997, 0.29987196)
Data Point: (14.384499, 0.29987196)
Data Point: (26.366509, 0.29987196)
Data Point: (48.329302, 0.29987196)
Data Point: (88.586679, 0.29667682)
Data Point: (162.37767, 0.20150036)
Data Point: (297.63514, 0.085811521)

Data Point: (545.55948, 0.049379583)
Data Point: (1,000, 0.039446735)
Estimation Properties
Vol. WC Estimation Method: Grain Size Function
Saturated Water Content: 0.3 ft^3/ft^3
Sample Material: Clay
Liquid Limit: 0 %
Diameter at 10% passing: 0.07000000000000001
Diameter at 60% passing: 0.2
Maximum: 1,000
Minimum: 0.01
Num. Points: 20

Matl. 2 Surficial Overburden Layer

Model: Vol WC Data Point Function
Function: Vol. Water Content vs. Pore-Water Pressure
Mv: 2.5e-006 /psf
Saturated Water Content: 0.30132774 ft^3/ft^3
Residual Water Content: 0.030132774 ft^3/ft^3
Curve Fit to Data: 100 %
Segment Curvature: 40 %
Porosity: 0.30132774
Data Points: Matric Suction (psf), Vol. Water Content (ft^3/ft^3)
Data Point: (0.01, 0.30110223)
Data Point: (0.018329807, 0.30110223)
Data Point: (0.033598183, 0.30110223)
Data Point: (0.061584821, 0.30110223)
Data Point: (0.11288379, 0.30110223)
Data Point: (0.20691381, 0.30110223)
Data Point: (0.37926902, 0.30110223)
Data Point: (0.6951928, 0.30110223)
Data Point: (1.274275, 0.30110223)
Data Point: (2.3357215, 0.30110223)
Data Point: (4.2813324, 0.30110223)
Data Point: (7.8475997, 0.30110223)
Data Point: (14.384499, 0.30110223)
Data Point: (26.366509, 0.30110223)
Data Point: (48.329302, 0.30110223)
Data Point: (88.586679, 0.29938489)
Data Point: (162.37767, 0.21986255)
Data Point: (297.63514, 0.094851578)
Data Point: (545.55948, 0.051777012)
Data Point: (1,000, 0.040605935)
Estimation Properties
Vol. WC Estimation Method: Grain Size Function
Saturated Water Content: 0.3 ft^3/ft^3
Sample Material: Clay
Liquid Limit: 0 %
Diameter at 10% passing: 0.07000000000000001
Diameter at 60% passing: 0.18

Maximum: 1,000
Minimum: 0.01
Num. Points: 20

Matl. 8 Filter Sand (C33)

Model: Vol WC Data Point Function
Function: Vol. Water Content vs. Pore-Water Pressure
Mv: 8e-007 /psf
Saturated Water Content: 0.30081752 ft^3/ft^3
Residual Water Content: 0.030081752 ft^3/ft^3
Curve Fit to Data: 100 %
Segment Curvature: 48 %
Porosity: 0.30081752
Data Points: Matric Suction (psf), Vol. Water Content (ft^3/ft^3)
Data Point: (0.01, 0.30028388)
Data Point: (0.018329807, 0.30028388)
Data Point: (0.033598183, 0.30028388)
Data Point: (0.061584821, 0.30028388)
Data Point: (0.11288379, 0.30028388)
Data Point: (0.20691381, 0.30028388)
Data Point: (0.37926902, 0.30028388)
Data Point: (0.6951928, 0.30028388)
Data Point: (1.274275, 0.30028388)
Data Point: (2.3357215, 0.30028388)
Data Point: (4.2813324, 0.30028388)
Data Point: (7.8475997, 0.30028388)
Data Point: (14.384499, 0.28112842)
Data Point: (26.366509, 0.15065712)
Data Point: (48.329302, 0.048430554)
Data Point: (88.586679, 0.021674388)
Data Point: (162.37767, 0.016081301)
Data Point: (297.63514, 0.013674367)
Data Point: (545.55948, 0.011770874)
Data Point: (1,000, 0.010084825)
Estimation Properties
Vol. WC Estimation Method: Grain Size Function
Saturated Water Content: 0.3 ft^3/ft^3
Sample Material: Gravel
Liquid Limit: 0 %
Diameter at 10% passing: 0.38
Diameter at 60% passing: 1.6
Maximum: 1,000
Minimum: 0.01
Num. Points: 20

Mat. 6 Fine Drainage Gravel (No 89)

Model: Vol WC Data Point Function
Function: Vol. Water Content vs. Pore-Water Pressure
Mv: 4e-007 /psf
Saturated Water Content: 0.21947752 ft^3/ft^3

Residual Water Content: 0.021947752 ft³/ft³
Curve Fit to Data: 100 %
Segment Curvature: 48 %
Porosity: 0.21947752
Data Points: Matric Suction (psf), Vol. Water Content (ft³/ft³)
Data Point: (0.01, 0.21916427)
Data Point: (0.018329807, 0.21916427)
Data Point: (0.033598183, 0.21916427)
Data Point: (0.061584821, 0.21916427)
Data Point: (0.11288379, 0.21916427)
Data Point: (0.20691381, 0.21916427)
Data Point: (0.37926902, 0.21916427)
Data Point: (0.6951928, 0.21916427)
Data Point: (1.274275, 0.21916427)
Data Point: (2.3357215, 0.21916427)
Data Point: (4.2813324, 0.20182012)
Data Point: (7.8475997, 0.090949254)
Data Point: (14.384499, 0.021737158)
Data Point: (26.366509, 0.0080845337)
Data Point: (48.329302, 0.0057554944)
Data Point: (88.586679, 0.0048689464)
Data Point: (162.37767, 0.0041947283)
Data Point: (297.63514, 0.0036057207)
Data Point: (545.55948, 0.0030872724)
Data Point: (1,000, 0.002632805)
Estimation Properties
Vol. WC Estimation Method: Grain Size Function
Saturated Water Content: 0.21875 ft³/ft³
Sample Material: Clay
Liquid Limit: 0 %
Diameter at 10% passing: 3.5
Diameter at 60% passing: 7.1
Maximum: 1,000
Minimum: 0.01
Num. Points: 20

Matl. 4 Deeper Marine Deposits

Model: Vol WC Data Point Function
Function: Vol. Water Content vs. Pore-Water Pressure
Mv: 2.5e-006 /psf
Saturated Water Content: 0.30154597 ft³/ft³
Residual Water Content: 0.030154597 ft³/ft³
Curve Fit to Data: 100 %
Segment Curvature: 40 %
Porosity: 0.30154597
Data Points: Matric Suction (psf), Vol. Water Content (ft³/ft³)
Data Point: (0.01, 0.30100508)
Data Point: (0.018329807, 0.30100508)
Data Point: (0.033598183, 0.30100508)
Data Point: (0.061584821, 0.30100508)

Data Point: (0.11288379, 0.30100508)
Data Point: (0.20691381, 0.30100508)
Data Point: (0.37926902, 0.30100508)
Data Point: (0.6951928, 0.30100508)
Data Point: (1.274275, 0.30100508)
Data Point: (2.3357215, 0.30100508)
Data Point: (4.2813324, 0.30100508)
Data Point: (7.8475997, 0.30100508)
Data Point: (14.384499, 0.30100508)
Data Point: (26.366509, 0.30100508)
Data Point: (48.329302, 0.30100508)
Data Point: (88.586679, 0.30100508)
Data Point: (162.37767, 0.2887592)
Data Point: (297.63514, 0.17412515)
Data Point: (545.55948, 0.076942285)
Data Point: (1,000, 0.051397358)

Estimation Properties
Vol. WC Estimation Method: Grain Size Function
Saturated Water Content: 0.3 ft^3/ft^3
Sample Material: Clay
Liquid Limit: 0 %
Diameter at 10% passing: 0.06
Diameter at 60% passing: 0.11
Maximum: 1,000
Minimum: 0.01
Num. Points: 20

Matl. 5 Soil Cement Armoring

Model: Vol WC Data Point Function
Function: Vol. Water Content vs. Pore-Water Pressure
Mv: 2.5e-006 /psf
Saturated Water Content: 0.30020276 ft^3/ft^3
Residual Water Content: 0.030020276 ft^3/ft^3
Curve Fit to Data: 100 %
Segment Curvature: 40 %
Porosity: 0.30020276
Data Points: Matric Suction (psf), Vol. Water Content (ft^3/ft^3)
Data Point: (0.01, 0.29987196)
Data Point: (0.018329807, 0.29987196)
Data Point: (0.033598183, 0.29987196)
Data Point: (0.061584821, 0.29987196)
Data Point: (0.11288379, 0.29987196)
Data Point: (0.20691381, 0.29987196)
Data Point: (0.37926902, 0.29987196)
Data Point: (0.6951928, 0.29987196)
Data Point: (1.274275, 0.29987196)
Data Point: (2.3357215, 0.29987196)
Data Point: (4.2813324, 0.29987196)
Data Point: (7.8475997, 0.29987196)
Data Point: (14.384499, 0.29987196)

Data Point: (26.366509, 0.29987196)
Data Point: (48.329302, 0.29987196)
Data Point: (88.586679, 0.29667682)
Data Point: (162.37767, 0.20150036)
Data Point: (297.63514, 0.085811521)
Data Point: (545.55948, 0.049379583)
Data Point: (1,000, 0.039446735)

Estimation Properties

Vol. WC Estimation Method: Grain Size Function
Saturated Water Content: 0.3 ft^3/ft^3
Sample Material: Clay
Liquid Limit: 0 %
Diameter at 10% passing: 0.07000000000000001
Diameter at 60% passing: 0.2
Maximum: 1,000
Minimum: 0.01
Num. Points: 20

Points

	X (ft)	Y (ft)
Point 1	-53.5	21
Point 2	-14.5	21
Point 3	-14.5	30
Point 4	-11.5	30
Point 5	-11.5	18
Point 6	-7	36.5
Point 7	-7	35.5
Point 8	6.8	35.5
Point 9	14	33
Point 10	13.7	32.1
Point 11	48.6	20.5
Point 12	51.2	18
Point 13	52.0033	19.4828
Point 14	51.9	19.4
Point 15	51.8636	19.2065
Point 16	52.097	19.0075
Point 17	52.3031	19.0832
Point 18	52.3561	19.2916
Point 19	52.3	19.4
Point 20	52.1797	19.4906
Point 21	59.3	18
Point 22	56.3	19
Point 23	54.8	19.5
Point 24	58	19.5
Point 25	7	36.5

Point 26	59.3	16.5
Point 27	67.3	16.5
Point 28	67.3	14.5
Point 29	69.3	14.5
Point 30	69.3	16.5
Point 31	69.3	18
Point 32	62.5	18
Point 33	59.5	19
Point 34	-90	18
Point 35	-90	16.5
Point 36	100	18
Point 37	100	16.5
Point 38	100	-11.4
Point 39	-90	-11.4
Point 40	100	-111.5
Point 41	-90	-111.5
Point 42	-139	18
Point 43	-127	22
Point 44	-113	22
Point 45	-101	18
Point 46	-180	18
Point 47	-180	16.5
Point 48	-180	-11.5
Point 49	-180	-111.5

Point 50	1,100	18
Point 51	1,100	16.5
Point 52	1,100	-11.5
Point 53	1,100	-111.5
Point 54	52.3546	19.1839
Point 55	51.9487	19.066
Point 56	52.2227	19.0254
Point 57	-1,200	-11.5
Point 58	-1,200	-111.5
Point 59	-53.5	19
Point 60	-12.5	19
Point 61	-12.5	20
Point 62	-53.5	20
Point 63	-77	18
Point 64	-77	16.5
Point 65	-1,200	16.5
Point 66	-234.5	16.5
Point 67	-290	-2
Point 68	-320	-2
Point 69	-375.5	16.5
Point 70	-230	18
Point 71	-1,200	18
Point 72	-380	18
Point 73	-365	13

Point 74	-245	13
Point 75	41.5	25
Point 76	-52.5	21
Point 77	-52.5	20
Point 78	-11.5	19
Point 79	-52.5	19
Point 80	-52.5	18
Point 81	-52.5	16.5
Point 82	-62.5	18
Point 83	-53.5	18
Point 84	-62.5	16.5
Point 85	-77	17.25
Point 86	-62.5	17.25

Lines

	Start Point	End Point	Hydraulic Boundary
Line 1	2	3	
Line 2	3	4	
Line 3	1	6	Drainage
Line 4	6	7	
Line 5	7	8	
Line 6	8	9	
Line 7	9	10	
Line 8	10	11	
Line 9	11	12	
Line 10	12	5	
Line 11	13	14	
Line 12	14	15	
Line 13	18	19	
Line 14	19	20	
Line 15	20	13	
Line 16	12	21	

Line 17	21	22	
Line 18	22	16	
Line 19	20	23	
Line 20	23	9	
Line 21	23	24	
Line 22	25	6	
Line 23	21	26	
Line 24	26	27	
Line 25	27	28	
Line 26	28	29	
Line 27	29	30	
Line 28	30	31	
Line 29	31	32	K-05 WAF Normal Pool at Elev. 25ft
Line 30	32	33	K-05 WAF Normal Pool at Elev. 25ft
Line 31	33	22	
Line 32	35	34	
Line 33	31	36	K-05 WAF Normal Pool at Elev. 25ft
Line 34	36	37	
Line 35	37	30	
Line 36	37	38	
Line 37	38	39	
Line 38	39	35	
Line 39	38	40	
Line 40	40	41	
Line 41	41	39	
Line 42	43	44	
Line 43	44	45	Drainage
Line 44	45	42	
Line 45	46	42	Drainage
Line 46	45	34	Drainage
Line 47	35	47	
Line 48	47	46	
Line 49	39	48	
Line 50	48	47	
Line 51	41	49	
Line 52	49	48	
Line 53	36	50	K-05 WAF Normal Pool at Elev. 25ft
Line 54	50	51	
Line 55	51	37	
Line 56	51	52	

Line 57	52	38	
Line 58	52	53	
Line 59	53	40	
Line 60	23	22	
Line 61	24	33	K-05 WAF Normal Pool at Elev. 25ft
Line 62	17	54	
Line 63	54	18	
Line 64	15	55	
Line 65	55	16	
Line 66	16	56	
Line 67	56	17	
Line 68	48	57	
Line 69	49	58	
Line 70	58	57	
Line 71	60	61	
Line 72	64	35	
Line 73	63	34	Drainage
Line 74	65	57	
Line 75	47	66	
Line 76	67	68	Seepage Canal at Elev. 13ft
Line 77	69	65	
Line 78	66	70	Drainage
Line 79	70	46	Drainage
Line 80	71	65	
Line 81	69	72	Drainage
Line 82	72	71	Drainage
Line 83	68	73	Seepage Canal at Elev. 13ft
Line 84	73	69	Drainage
Line 85	66	74	Drainage
Line 86	74	67	Seepage Canal at Elev. 13ft
Line 87	24	75	K-05 WAF Normal Pool at Elev. 25ft
Line 88	75	25	
Line 89	1	76	
Line 90	76	2	
Line 91	61	77	
Line 92	77	62	
Line 93	76	77	
Line 94	62	1	
Line 95	4	78	
Line 96	78	5	
Line 97	78	60	
Line 98	59	79	

Line 99	79	60	
Line 100	5	80	
Line 101	80	79	
Line 102	26	81	
Line 103	81	80	
Line 104	81	84	
Line 105	84	64	
Line 106	82	83	
Line 107	83	59	
Line 108	64	85	
Line 109	85	63	
Line 110	84	86	
Line 111	86	82	
Line 112	86	85	
Line 113	82	63	Drainage
Line 114	79	77	
Line 115	59	62	Drainage
Line 116	42	43	

Regions

	Material	Points	Area (ft²)
Region 1	Matl. 1 - Embankment Material	1,6,7,8,9,10,11,12,5,78,4,3,2,76	993.93
Region 2		13,14,15,55,16,56,17,54,18,19,20	0.18474
Region 3	Matl. 8 - Filter Sand	9,10,11,12,21,22,16,55,15,14,13,20,23	49.637
Region 4	Matl. 5 - Soil Cement Armoring	6,7,8,9,23,24,75,25	69.1
Region 5	Matl. 5 - Soil Cement Armoring	22,21,26,27,28,29,30,31,32,33	22.2
Region 6	Matl. 2 - Surficial Overburden Layer	31,36,37,30	46.05

Region 7	Matl. 4 - Deeper Marine Deposits	39,38,40,41	19,019
Region 8	Matl. 1 - Embankment Material	42,43,44,45	104
Region 9	Matl. 2 - Surficial Overburden Layer	46,42,45,34,35,47	135
Region 10	Matl. 3 - Shallow Alluvial Deposits	47,35,39,48	2,515.5
Region 11	Matl. 4 - Deeper Marine Deposits	48,39,41,49	9,004.5
Region 12	Matl. 2 - Surficial Overburden Layer	36,50,51,37	1,500
Region 13	Matl. 3 - Shallow Alluvial Deposits	37,51,52,38	27,950
Region 14	Matl. 4 - Deeper Marine Deposits	38,52,53,40	1.0005e+005
Region 15	Matl. 8 - Filter Sand	20,23,22,16,56,17,54,18,19	1.5978
Region 16	Matl. 5 - Soil Cement Armoring	23,24,33,22	1.6
Region 17	Matl. 4 - Deeper Marine Deposits	57,48,49,58	1.02e+005
Region 18	Matl. 3 - Shallow Alluvial Deposits	35,39,38,37,30,29,28,27,26,81,84,64	5,297
Region 19	Matl. 2 - Surficial Overburden Layer	34,35,64,85,63	19.5
Region 20	Matl. 3 - Shallow Alluvial Deposits	65,57,48,47,66,74,67,68,73,69	26,978
Region 21	Matl. 2 - Surficial Overburden Layer	66,70,46,47	78.375
Region 22	Matl. 2 - Surficial Overburden Layer	71,65,69,72	1,233.4
Region 23	Matl. 9 Concrete Outfall Works	76,77,62,1	1
Region 24	Matl. 8 - Filter Sand	76,2,3,4,78,60,61,77	69
Region 25	Matl. 8 - Filter Sand	79,60,78,5,80	41
Region 26	Matl. 2 - Surficial Overburden Layer	80,5,12,21,26,81	167.7
Region 27	Matl. 9 Concrete Outfall Works	82,83,59,79,80,81,84,86	16
Region 28	Matl. 2 - Surficial Overburden Layer	85,64,84,86	10.875
Region 29	Matl. 2 - Surficial Overburden Layer	63,85,86,82	10.875
Region 30	Matl. 6 - Fine Drainage Gravel	77,61,60,79	40

Region 31	Matl. 6 - Fine Drainage Gravel	62,77,79,59	1

Steady-State Seepage (EOC)

Report generated using GeoStudio 2012. Copyright © 1991-2013 GEO-SLOPE International Ltd.

File Information

Title: LOWP PIR Analysis Section B
Created By: Viessman, Michael W CIV USARMY CESAJ (US)
Last Edited By: Viessman, Michael W CIV USARMY CESAJ (US)
Revision Number: 594
File Version: 8.2
Tool Version: 8.12.3.7901
Date: 8/27/2018
Time: 10:31:26 AM
File Name: Section B EOC USP w toe drain.gsz
Directory: C:\Users\k3engmwv\Documents\LOWP\FY17-18 PIR Work\SEEP and SLOPEW Files\

Project Settings

Length(L) Units: feet
Time(t) Units: Seconds
Force(F) Units: lbf
Pressure(p) Units: psf
Mass(M) Units: lbs
Mass Flux Units: lbs/sec
Unit Weight of Water: 62.4 pcf
View: 2D
Element Thickness: 1

Analysis Settings

Steady-State Seepage (EOC)

Description: No U/S pool, toe drain, canal at wse 13ft
Kind: SEEP/W
Method: Steady-State
Settings
    Include Air Flow: No
Control
    Apply Runoff: Yes
Convergence
    Maximum Number of Iterations: 1,000
    Minimum Pressure Head Difference: 0.005
    Significant Digits: 2
    Max # of Reviews: 10
    Hydraulic Under-Relaxation Criteria
        Under-Relaxation Initial Rate: 1
        Under-Relaxation Min. Rate: 0.1

Under-Relaxation Reduction Rate: 0.65
Under-Relaxation Iterations: 10
Equation Solver: Parallel Direct
Time
Starting Time: 0 sec
Duration: 0 sec
Ending Time: 0 sec

Materials

Matl. 1 - Embankment Material

Model: Saturated / Unsaturated
Hydraulic
K-Function: Matl. 1 Embankment Material
Ky'/Kx' Ratio: 0.25
Rotation: 0 °
Vol. WC. Function: Matl. 1 Embankment Fill from Borrow Areas

Matl. 2 - Surficial Overburden Layer

Model: Saturated / Unsaturated
Hydraulic
K-Function: Matl. 2 Surficial Overburden Layer
Ky'/Kx' Ratio: 0.1
Rotation: 0 °
Vol. WC. Function: Matl. 2 Surficial Overburden Layer

Matl. 3 - Shallow Alluvial Deposits

Model: Saturated / Unsaturated
Hydraulic
K-Function: Matl. 3 Shallow Alluvial Deposits
Ky'/Kx' Ratio: 0.1
Rotation: 0 °
Vol. WC. Function: Matl. 3 Shallow Alluvial Deposits

Matl. 4 - Deeper Marine Deposits

Model: Saturated / Unsaturated
Hydraulic
K-Function: Matl. 4 Deeper Marine Deposits
Ky'/Kx' Ratio: 0.1
Rotation: 0 °
Vol. WC. Function: Matl. 4 Deeper Marine Deposits

Matl. 5 - Soil Cement Armoring

Model: Saturated / Unsaturated
Hydraulic
K-Function: Matl. 5 Soil Cement Armoring
Ky'/Kx' Ratio: 1
Rotation: 0 °
Vol. WC. Function: Matl. 5 Soil Cement Armoring

Matl. 6 - Fine Drainage Gravel

Model: Saturated / Unsaturated
Hydraulic
K-Function: Matl. 6 Fine Drainage Gravel
Ky'/Kx' Ratio: 1
Rotation: 0 °
Vol. WC. Function: Mat. 6 Fine Drainage Gravel (No 89)

Matl. 8 - Filter Sand

Model: Saturated / Unsaturated
Hydraulic
K-Function: Matl. 8 Filter Sand
Ky'/Kx' Ratio: 1
Rotation: 0 °
Vol. WC. Function: Matl. 8 Filter Sand (C33)

Matl. 9 Concrete Outfall Works

Model: Saturated Only
Hydraulic
K-Sat: 3.28e-010 ft/sec
Ky'/Kx' Ratio: 1
Rotation: 0 °
Volumetric Water Content: 0.3 ft^3/ft^3
Mv: 1e-008 /psf

Boundary Conditions

Drainage

Type: Total Flux (Q) 0
Review: Yes

Seepage Canal at Elev. 13ft

Type: Head (H) 13
Review: No

Flux Sections

Flux Section 1

Coordinates
Coordinate: (-53.387097, 20.026507) ft
Coordinate: (-53.387097, 18.965214) ft

Flux Section 2

Coordinates
Coordinate: (-77.145669, 18.00689) ft
Coordinate: (-77.130906, 16.397638) ft
Coordinate: (-62.322835, 16.373031) ft

Coordinate: (-62.322835, 16.63878) ft

Flux Section 3

Coordinates

Coordinate: (0, 36.6) ft
Coordinate: (0, -112.3) ft

Flux Section 4

Coordinates

Coordinate: (-382.8, 18.2) ft
Coordinate: (-319.7, -3.4) ft
Coordinate: (-289.2, -3.3) ft
Coordinate: (-228.6, 17.7) ft

Flux Section 5

Coordinates

Coordinate: (-399.8, 18) ft
Coordinate: (-400.1, -112.4) ft

K Functions

Matl. 1 Embankment Material

Model: Hyd K Data Point Function
Function: X-Conductivity vs. Pore-Water Pressure
Curve Fit to Data: 100 %
Segment Curvature: 36 %
K-Saturation: 0.000131
Data Points: Matric Suction (psf), X-Conductivity (ft/sec)
Data Point: (0.01, 0.000131)
Data Point: (0.018329807, 0.00013099927)
Data Point: (0.033598183, 0.00013099852)
Data Point: (0.061584821, 0.00013099772)
Data Point: (0.11288379, 0.00013099684)
Data Point: (0.20691381, 0.00013099581)
Data Point: (0.37926902, 0.0001309945)
Data Point: (0.6951928, 0.00013099268)
Data Point: (1.274275, 0.00013098992)
Data Point: (2.3357215, 0.00013098549)
Data Point: (4.2813324, 0.0001309777)
Data Point: (7.8475997, 0.00013096339)
Data Point: (14.384499, 0.00013094955)
Data Point: (26.366509, 0.00013089452)
Data Point: (48.329302, 0.00013043835)
Data Point: (88.586679, 0.00012910123)
Data Point: (162.37767, 5.664247e-005)
Data Point: (297.63514, 2.5159921e-006)
Data Point: (545.55948, 4.7485927e-008)
Data Point: (1,000, 1.7886028e-009)
Estimation Properties

Hyd. K-Function Estimation Method: Fredlund-Xing Function
Volume Water Content Function: Matl. 1 Embankment Fill from Borrow Areas
Hydraulic K Sat: 0.000131 ft/sec
Residual Water Content: 0.0495 ft^3/ft^3
Maximum: 1,000
Minimum: 0.01
Num. Points: 20

Matl. 4 Deeper Marine Deposits

Model: Hyd K Data Point Function
Function: X-Conductivity vs. Pore-Water Pressure
Curve Fit to Data: 100 %
Segment Curvature: 44 %
K-Saturation: 0.000984
Data Points: Matric Suction (psf), X-Conductivity (ft/sec)
Data Point: (0.01, 0.000984)
Data Point: (0.018329807, 0.00098398585)
Data Point: (0.033598183, 0.00098397151)
Data Point: (0.061584821, 0.00098395679)
Data Point: (0.11288379, 0.00098394139)
Data Point: (0.20691381, 0.00098392476)
Data Point: (0.37926902, 0.00098390584)
Data Point: (0.6951928, 0.00098388274)
Data Point: (1.274275, 0.00098385199)
Data Point: (2.3357215, 0.0009838074)
Data Point: (4.2813324, 0.00098373618)
Data Point: (7.8475997, 0.00098361453)
Data Point: (14.384499, 0.0009834543)
Data Point: (26.366509, 0.00098304118)
Data Point: (48.329302, 0.00098089274)
Data Point: (88.586679, 0.00098804841)
Data Point: (162.37767, 0.00089693201)
Data Point: (297.63514, 0.00029836287)
Data Point: (545.55948, 5.5741791e-006)
Data Point: (1,000, 8.8545842e-008)
Estimation Properties
Hyd. K-Function Estimation Method: Fredlund-Xing Function
Volume Water Content Function: Matl. 4 Deeper Marine Deposits
Hydraulic K Sat: 0.000984 ft/sec
Residual Water Content: 0.03 ft^3/ft^3
Maximum: 1,000
Minimum: 0.01
Num. Points: 20

Matl. 6 Fine Drainage Gravel

Model: Hyd K Data Point Function
Function: X-Conductivity vs. Pore-Water Pressure
Curve Fit to Data: 100 %
Segment Curvature: 40 %
K-Saturation: 0.0116

Data Points: Matric Suction (psf), X-Conductivity (ft/sec)
- Data Point: (0.01, 0.0116)
- Data Point: (0.018329807, 0.011599999)
- Data Point: (0.033598183, 0.011599999)
- Data Point: (0.061584821, 0.011599997)
- Data Point: (0.11288379, 0.011599992)
- Data Point: (0.20691381, 0.011599991)
- Data Point: (0.37926902, 0.011600028)
- Data Point: (0.6951928, 0.011599657)
- Data Point: (1.274275, 0.011599409)
- Data Point: (2.3357215, 0.011606742)
- Data Point: (4.2813324, 0.01023118)
- Data Point: (7.8475997, 0.0019666911)
- Data Point: (14.384499, 3.3083667e-005)
- Data Point: (26.366509, 3.5079262e-007)
- Data Point: (48.329302, 1.0209264e-008)
- Data Point: (88.586679, 1.7809046e-009)
- Data Point: (162.37767, 3.7872508e-010)
- Data Point: (297.63514, 7.9282799e-011)
- Data Point: (545.55948, 1.3312429e-011)
- Data Point: (1,000, 1.2335483e-012)

Estimation Properties
- Hyd. K-Function Estimation Method: Fredlund-Xing Function
- Volume Water Content Function: Mat. 6 Fine Drainage Gravel (No 89)
- Hydraulic K Sat: 0.0116 ft/sec
- Residual Water Content: 0.042 ft^3/ft^3
- Maximum: 1,000
- Minimum: 0.01
- Num. Points: 20

Matl. 2 Surficial Overburden Layer

Model: Hyd K Data Point Function

Function: X-Conductivity vs. Pore-Water Pressure
- Curve Fit to Data: 100 %
- Segment Curvature: 36 %

K-Saturation: 0.00026

Data Points: Matric Suction (psf), X-Conductivity (ft/sec)
- Data Point: (0.01, 0.00026)
- Data Point: (0.018329807, 0.00025999835)
- Data Point: (0.033598183, 0.00025999664)
- Data Point: (0.061584821, 0.00025999485)
- Data Point: (0.11288379, 0.00025999288)
- Data Point: (0.20691381, 0.00025999062)
- Data Point: (0.37926902, 0.00025998779)
- Data Point: (0.6951928, 0.00025998393)
- Data Point: (1.274275, 0.00025997819)
- Data Point: (2.3357215, 0.00025996907)
- Data Point: (4.2813324, 0.00025995329)
- Data Point: (7.8475997, 0.00025992467)
- Data Point: (14.384499, 0.00025989276)

Data Point: (26.366509, 0.00025978642)
Data Point: (48.329302, 0.00025903344)
Data Point: (88.586679, 0.0002586222)
Data Point: (162.37767, 0.00013432217)
Data Point: (297.63514, 8.1547435e-006)
Data Point: (545.55948, 1.3663567e-007)
Data Point: (1,000, 4.5608744e-009)
Estimation Properties
Hyd. K-Function Estimation Method: Fredlund-Xing Function
Volume Water Content Function: Matl. 2 Surficial Overburden Layer
Hydraulic K Sat: 0.00026 ft/sec
Residual Water Content: 0.0495 ft^3/ft^3
Maximum: 1,000
Minimum: 0.01
Num. Points: 20

Matl. 3 Shallow Alluvial Deposits

Model: Hyd K Data Point Function
Function: X-Conductivity vs. Pore-Water Pressure
Curve Fit to Data: 100 %
Segment Curvature: 36 %
K-Saturation: 0.00174
Data Points: Matric Suction (psf), X-Conductivity (ft/sec)
Data Point: (0.01, 0.00174)
Data Point: (0.018329807, 0.0017399903)
Data Point: (0.033598183, 0.0017399803)
Data Point: (0.061584821, 0.0017399698)
Data Point: (0.11288379, 0.0017399581)
Data Point: (0.20691381, 0.0017399444)
Data Point: (0.37926902, 0.0017399269)
Data Point: (0.6951928, 0.0017399027)
Data Point: (1.274275, 0.0017398661)
Data Point: (2.3357215, 0.0017398072)
Data Point: (4.2813324, 0.0017397038)
Data Point: (7.8475997, 0.0017395137)
Data Point: (14.384499, 0.0017393299)
Data Point: (26.366509, 0.001738599)
Data Point: (48.329302, 0.0017325399)
Data Point: (88.586679, 0.0017147796)
Data Point: (162.37767, 0.00075235037)
Data Point: (297.63514, 3.3418521e-005)
Data Point: (545.55948, 6.307291e-007)
Data Point: (1,000, 2.3757014e-008)
Estimation Properties
Hyd. K-Function Estimation Method: Fredlund-Xing Function
Volume Water Content Function: Matl. 3 Shallow Alluvial Deposits
Hydraulic K Sat: 0.00174 ft/sec
Residual Water Content: 0.0495 ft^3/ft^3
Maximum: 1,000
Minimum: 0.01

Num. Points: 20

Matl. 5 Soil Cement Armoring

Model: Hyd K Data Point Function
Function: X-Conductivity vs. Pore-Water Pressure
Curve Fit to Data: 100 %
Segment Curvature: 44 %
K-Saturation: 1.31e-005
Data Points: Matric Suction (psf), X-Conductivity (ft/sec)
Data Point: (0.01, 1.31e-005)
Data Point: (0.018329807, 1.3099927e-005)
Data Point: (0.033598183, 1.3099852e-005)
Data Point: (0.061584821, 1.3099772e-005)
Data Point: (0.11288379, 1.3099684e-005)
Data Point: (0.20691381, 1.3099581e-005)
Data Point: (0.37926902, 1.309945e-005)
Data Point: (0.6951928, 1.3099268e-005)
Data Point: (1.274275, 1.3098992e-005)
Data Point: (2.3357215, 1.3098549e-005)
Data Point: (4.2813324, 1.309777e-005)
Data Point: (7.8475997, 1.3096339e-005)
Data Point: (14.384499, 1.3094955e-005)
Data Point: (26.366509, 1.3089452e-005)
Data Point: (48.329302, 1.3043835e-005)
Data Point: (88.586679, 1.2910123e-005)
Data Point: (162.37767, 5.664247e-006)
Data Point: (297.63514, 2.5159921e-007)
Data Point: (545.55948, 4.7485927e-009)
Data Point: (1,000, 1.7886028e-010)
Estimation Properties
Hyd. K-Function Estimation Method: Fredlund-Xing Function
Volume Water Content Function: Matl. 5 Soil Cement Armoring
Hydraulic K Sat: 1.31e-005 ft/sec
Residual Water Content: 0.03 ft^3/ft^3
Maximum: 1,000
Minimum: 0.01
Num. Points: 20

Matl. 8 Filter Sand

Model: Hyd K Data Point Function
Function: X-Conductivity vs. Pore-Water Pressure
Curve Fit to Data: 100 %
Segment Curvature: 44 %
K-Saturation: 0.000925
Data Points: Matric Suction (psf), X-Conductivity (ft/sec)
Data Point: (0.01, 0.000925)
Data Point: (0.018329807, 0.00092499993)
Data Point: (0.033598183, 0.00092499981)
Data Point: (0.061584821, 0.0009249996)
Data Point: (0.11288379, 0.00092499919)

Data Point: (0.20691381, 0.00092499854)
Data Point: (0.37926902, 0.00092499785)
Data Point: (0.6951928, 0.00092499117)
Data Point: (1.274275, 0.00092498427)
Data Point: (2.3357215, 0.00092515575)
Data Point: (4.2813324, 0.00092444336)
Data Point: (7.8475997, 0.00092025484)
Data Point: (14.384499, 0.00086768248)
Data Point: (26.366509, 0.00022215817)
Data Point: (48.329302, 5.6149022e-006)
Data Point: (88.586679, 9.4931606e-008)
Data Point: (162.37767, 4.4270536e-009)
Data Point: (297.63514, 6.3580973e-010)
Data Point: (545.55948, 1.1244323e-010)
Data Point: (1,000, 1.0762229e-011)

Estimation Properties
Hyd. K-Function Estimation Method: Fredlund-Xing Function
Volume Water Content Function: Matl. 8 Filter Sand (C33)
Hydraulic K Sat: 0.000925 ft/sec
Residual Water Content: 0.03 ft^3/ft^3
Maximum: 1,000
Minimum: 0.01
Num. Points: 20

Vol. Water Content Functions

Matl. 3 Shallow Alluvial Deposits

Model: Vol WC Data Point Function
Function: Vol. Water Content vs. Pore-Water Pressure
Mv: 2.5e-006 /psf
Saturated Water Content: 0.30020276 ft^3/ft^3
Residual Water Content: 0.030020276 ft^3/ft^3
Curve Fit to Data: 100 %
Segment Curvature: 40 %
Porosity: 0.30020276
Data Points: Matric Suction (psf), Vol. Water Content (ft^3/ft^3)
Data Point: (0.01, 0.29987196)
Data Point: (0.018329807, 0.29987196)
Data Point: (0.033598183, 0.29987196)
Data Point: (0.061584821, 0.29987196)
Data Point: (0.11288379, 0.29987196)
Data Point: (0.20691381, 0.29987196)
Data Point: (0.37926902, 0.29987196)
Data Point: (0.6951928, 0.29987196)
Data Point: (1.274275, 0.29987196)
Data Point: (2.3357215, 0.29987196)
Data Point: (4.2813324, 0.29987196)
Data Point: (7.8475997, 0.29987196)
Data Point: (14.384499, 0.29987196)

Data Point: (26.366509, 0.29987196)
Data Point: (48.329302, 0.29987196)
Data Point: (88.586679, 0.29667682)
Data Point: (162.37767, 0.20150036)
Data Point: (297.63514, 0.085811521)
Data Point: (545.55948, 0.049379583)
Data Point: (1,000, 0.039446735)
Estimation Properties
Vol. WC Estimation Method: Grain Size Function
Saturated Water Content: 0.3 ft^3/ft^3
Sample Material: Clay
Liquid Limit: 0 %
Diameter at 10% passing: 0.07000000000000001
Diameter at 60% passing: 0.2
Maximum: 1,000
Minimum: 0.01
Num. Points: 20

Matl. 1 Embankment Fill from Borrow Areas

Model: Vol WC Data Point Function
Function: Vol. Water Content vs. Pore-Water Pressure
Mv: 2.5e-006 /psf
Saturated Water Content: 0.30020276 ft^3/ft^3
Residual Water Content: 0.030020276 ft^3/ft^3
Curve Fit to Data: 100 %
Segment Curvature: 40 %
Porosity: 0.30020276
Data Points: Matric Suction (psf), Vol. Water Content (ft^3/ft^3)
Data Point: (0.01, 0.29987196)
Data Point: (0.018329807, 0.29987196)
Data Point: (0.033598183, 0.29987196)
Data Point: (0.061584821, 0.29987196)
Data Point: (0.11288379, 0.29987196)
Data Point: (0.20691381, 0.29987196)
Data Point: (0.37926902, 0.29987196)
Data Point: (0.6951928, 0.29987196)
Data Point: (1.274275, 0.29987196)
Data Point: (2.3357215, 0.29987196)
Data Point: (4.2813324, 0.29987196)
Data Point: (7.8475997, 0.29987196)
Data Point: (14.384499, 0.29987196)
Data Point: (26.366509, 0.29987196)
Data Point: (48.329302, 0.29987196)
Data Point: (88.586679, 0.29667682)
Data Point: (162.37767, 0.20150036)
Data Point: (297.63514, 0.085811521)
Data Point: (545.55948, 0.049379583)
Data Point: (1,000, 0.039446735)
Estimation Properties
Vol. WC Estimation Method: Grain Size Function

Saturated Water Content: 0.3 ft^3/ft^3
Sample Material: Clay
Liquid Limit: 0 %
Diameter at 10% passing: 0.07000000000000001
Diameter at 60% passing: 0.2
Maximum: 1,000
Minimum: 0.01
Num. Points: 20

Matl. 2 Surficial Overburden Layer

Model: Vol WC Data Point Function
Function: Vol. Water Content vs. Pore-Water Pressure
Mv: 2.5e-006 /psf
Saturated Water Content: 0.30132774 ft^3/ft^3
Residual Water Content: 0.030132774 ft^3/ft^3
Curve Fit to Data: 100 %
Segment Curvature: 40 %
Porosity: 0.30132774
Data Points: Matric Suction (psf), Vol. Water Content (ft^3/ft^3)
Data Point: (0.01, 0.30110223)
Data Point: (0.018329807, 0.30110223)
Data Point: (0.033598183, 0.30110223)
Data Point: (0.061584821, 0.30110223)
Data Point: (0.11288379, 0.30110223)
Data Point: (0.20691381, 0.30110223)
Data Point: (0.37926902, 0.30110223)
Data Point: (0.6951928, 0.30110223)
Data Point: (1.274275, 0.30110223)
Data Point: (2.3357215, 0.30110223)
Data Point: (4.2813324, 0.30110223)
Data Point: (7.8475997, 0.30110223)
Data Point: (14.384499, 0.30110223)
Data Point: (26.366509, 0.30110223)
Data Point: (48.329302, 0.30110223)
Data Point: (88.586679, 0.29938489)
Data Point: (162.37767, 0.21986255)
Data Point: (297.63514, 0.094851578)
Data Point: (545.55948, 0.051777012)
Data Point: (1,000, 0.040605935)
Estimation Properties
Vol. WC Estimation Method: Grain Size Function
Saturated Water Content: 0.3 ft^3/ft^3
Sample Material: Clay
Liquid Limit: 0 %
Diameter at 10% passing: 0.07000000000000001
Diameter at 60% passing: 0.18
Maximum: 1,000
Minimum: 0.01
Num. Points: 20

Matl. 8 Filter Sand (C33)

Model: Vol WC Data Point Function
Function: Vol. Water Content vs. Pore-Water Pressure
Mv: 8e-007 /psf
Saturated Water Content: 0.30081752 ft^3/ft^3
Residual Water Content: 0.030081752 ft^3/ft^3
Curve Fit to Data: 100 %
Segment Curvature: 48 %
Porosity: 0.30081752
Data Points: Matric Suction (psf), Vol. Water Content (ft^3/ft^3)
Data Point: (0.01, 0.30028388)
Data Point: (0.018329807, 0.30028388)
Data Point: (0.033598183, 0.30028388)
Data Point: (0.061584821, 0.30028388)
Data Point: (0.11288379, 0.30028388)
Data Point: (0.20691381, 0.30028388)
Data Point: (0.37926902, 0.30028388)
Data Point: (0.6951928, 0.30028388)
Data Point: (1.274275, 0.30028388)
Data Point: (2.3357215, 0.30028388)
Data Point: (4.2813324, 0.30028388)
Data Point: (7.8475997, 0.30028388)
Data Point: (14.384499, 0.28112842)
Data Point: (26.366509, 0.15065712)
Data Point: (48.329302, 0.048430554)
Data Point: (88.586679, 0.021674388)
Data Point: (162.37767, 0.016081301)
Data Point: (297.63514, 0.013674367)
Data Point: (545.55948, 0.011770874)
Data Point: (1,000, 0.010084825)
Estimation Properties
Vol. WC Estimation Method: Grain Size Function
Saturated Water Content: 0.3 ft^3/ft^3
Sample Material: Gravel
Liquid Limit: 0 %
Diameter at 10% passing: 0.38
Diameter at 60% passing: 1.6
Maximum: 1,000
Minimum: 0.01
Num. Points: 20

Mat. 6 Fine Drainage Gravel (No 89)

Model: Vol WC Data Point Function
Function: Vol. Water Content vs. Pore-Water Pressure
Mv: 4e-007 /psf
Saturated Water Content: 0.21947752 ft^3/ft^3
Residual Water Content: 0.021947752 ft^3/ft^3
Curve Fit to Data: 100 %
Segment Curvature: 48 %
Porosity: 0.21947752

Data Points: Matric Suction (psf), Vol. Water Content (ft^3/ft^3)
- Data Point: (0.01, 0.21916427)
- Data Point: (0.018329807, 0.21916427)
- Data Point: (0.033598183, 0.21916427)
- Data Point: (0.061584821, 0.21916427)
- Data Point: (0.11288379, 0.21916427)
- Data Point: (0.20691381, 0.21916427)
- Data Point: (0.37926902, 0.21916427)
- Data Point: (0.6951928, 0.21916427)
- Data Point: (1.274275, 0.21916427)
- Data Point: (2.3357215, 0.21916427)
- Data Point: (4.2813324, 0.20182012)
- Data Point: (7.8475997, 0.090949254)
- Data Point: (14.384499, 0.021737158)
- Data Point: (26.366509, 0.0080845337)
- Data Point: (48.329302, 0.0057554944)
- Data Point: (88.586679, 0.0048689464)
- Data Point: (162.37767, 0.0041947283)
- Data Point: (297.63514, 0.0036057207)
- Data Point: (545.55948, 0.0030872724)
- Data Point: (1,000, 0.002632805)

Estimation Properties
- Vol. WC Estimation Method: Grain Size Function
- Saturated Water Content: 0.21875 ft^3/ft^3
- Sample Material: Clay
- Liquid Limit: 0 %
- Diameter at 10% passing: 3.5
- Diameter at 60% passing: 7.1
- Maximum: 1,000
- Minimum: 0.01
- Num. Points: 20

Matl. 4 Deeper Marine Deposits

Model: Vol WC Data Point Function

Function: Vol. Water Content vs. Pore-Water Pressure
- Mv: 2.5e-006 /psf
- Saturated Water Content: 0.30154597 ft^3/ft^3
- Residual Water Content: 0.030154597 ft^3/ft^3
- Curve Fit to Data: 100 %
- Segment Curvature: 40 %

Porosity: 0.30154597

Data Points: Matric Suction (psf), Vol. Water Content (ft^3/ft^3)
- Data Point: (0.01, 0.30100508)
- Data Point: (0.018329807, 0.30100508)
- Data Point: (0.033598183, 0.30100508)
- Data Point: (0.061584821, 0.30100508)
- Data Point: (0.11288379, 0.30100508)
- Data Point: (0.20691381, 0.30100508)
- Data Point: (0.37926902, 0.30100508)
- Data Point: (0.6951928, 0.30100508)

Data Point: (1.274275, 0.30100508)
Data Point: (2.3357215, 0.30100508)
Data Point: (4.2813324, 0.30100508)
Data Point: (7.8475997, 0.30100508)
Data Point: (14.384499, 0.30100508)
Data Point: (26.366509, 0.30100508)
Data Point: (48.329302, 0.30100508)
Data Point: (88.586679, 0.30100508)
Data Point: (162.37767, 0.2887592)
Data Point: (297.63514, 0.17412515)
Data Point: (545.55948, 0.076942285)
Data Point: (1,000, 0.051397358)

Estimation Properties
Vol. WC Estimation Method: Grain Size Function
Saturated Water Content: 0.3 ft^3/ft^3
Sample Material: Clay
Liquid Limit: 0 %
Diameter at 10% passing: 0.06
Diameter at 60% passing: 0.11
Maximum: 1,000
Minimum: 0.01
Num. Points: 20

Matl. 5 Soil Cement Armoring

Model: Vol WC Data Point Function
Function: Vol. Water Content vs. Pore-Water Pressure
Mv: 2.5e-006 /psf
Saturated Water Content: 0.30020276 ft^3/ft^3
Residual Water Content: 0.030020276 ft^3/ft^3
Curve Fit to Data: 100 %
Segment Curvature: 40 %
Porosity: 0.30020276
Data Points: Matric Suction (psf), Vol. Water Content (ft^3/ft^3)
Data Point: (0.01, 0.29987196)
Data Point: (0.018329807, 0.29987196)
Data Point: (0.033598183, 0.29987196)
Data Point: (0.061584821, 0.29987196)
Data Point: (0.11288379, 0.29987196)
Data Point: (0.20691381, 0.29987196)
Data Point: (0.37926902, 0.29987196)
Data Point: (0.6951928, 0.29987196)
Data Point: (1.274275, 0.29987196)
Data Point: (2.3357215, 0.29987196)
Data Point: (4.2813324, 0.29987196)
Data Point: (7.8475997, 0.29987196)
Data Point: (14.384499, 0.29987196)
Data Point: (26.366509, 0.29987196)
Data Point: (48.329302, 0.29987196)
Data Point: (88.586679, 0.29667682)
Data Point: (162.37767, 0.20150036)

Data Point: (297.63514, 0.085811521)
Data Point: (545.55948, 0.049379583)
Data Point: (1,000, 0.039446735)

Estimation Properties

Vol. WC Estimation Method: Grain Size Function
Saturated Water Content: 0.3 ft^3/ft^3
Sample Material: Clay
Liquid Limit: 0 %
Diameter at 10% passing: 0.07000000000000001
Diameter at 60% passing: 0.2
Maximum: 1,000
Minimum: 0.01
Num. Points: 20

Points

	X (ft)	Y (ft)
Point 1	-53.5	21
Point 2	-14.5	21
Point 3	-14.5	30
Point 4	-11.5	30
Point 5	-11.5	18
Point 6	-7	36.5
Point 7	-7	35.5
Point 8	6.8	35.5
Point 9	14	33
Point 10	13.7	32.1
Point 11	48.6	20.5
Point 12	51.2	18
Point 13	52.0033	19.4828
Point 14	51.9	19.4
Point 15	51.8636	19.2065
Point 16	52.097	19.0075
Point 17	52.3031	19.0832
Point 18	52.3561	19.2916
Point 19	52.3	19.4
Point 20	52.1797	19.4906
Point 21	59.3	18
Point 22	56.3	19
Point 23	54.8	19.5
Point 24	58	19.5
Point 25	7	36.5
Point 26	59.3	16.5
Point 27	67.3	16.5
Point 28	67.3	14.5

Point 29	69.3	14.5
Point 30	69.3	16.5
Point 31	69.3	18
Point 32	62.5	18
Point 33	59.5	19
Point 34	-90	18
Point 35	-90	16.5
Point 36	100	18
Point 37	100	16.5
Point 38	100	-11.4
Point 39	-90	-11.4
Point 40	100	-111.5
Point 41	-90	-111.5
Point 42	-139	18
Point 43	-127	22
Point 44	-113	22
Point 45	-101	18
Point 46	-180	18
Point 47	-180	16.5
Point 48	-180	-11.5
Point 49	-180	-111.5
Point 50	1,100	18
Point 51	1,100	16.5
Point 52	1,100	-11.5

Point 53	1,100	-111.5
Point 54	52.3546	19.1839
Point 55	51.9487	19.066
Point 56	52.2227	19.0254
Point 57	-1,200	-11.5
Point 58	-1,200	-111.5
Point 59	-53.5	19
Point 60	-12.5	19
Point 61	-12.5	20
Point 62	-53.5	20
Point 63	-77	18
Point 64	-77	16.5
Point 65	-1,200	16.5
Point 66	-234.5	16.5
Point 67	-290	-2
Point 68	-320	-2
Point 69	-375.5	16.5
Point 70	-230	18
Point 71	-1,200	18
Point 72	-380	18
Point 73	-365	13
Point 74	-245	13
Point 75	41.5	25
Point 76	-52.5	21

Point 77	-52.5	20
Point 78	-11.5	19
Point 79	-52.5	19
Point 80	-52.5	18
Point 81	-52.5	16.5
Point 82	-62.5	18
Point 83	-53.5	18
Point 84	-62.5	16.5
Point 85	-77	17.25
Point 86	-62.5	17.25
Point 87	29.5	29

Lines

	Start Point	End Point	Hydraulic Boundary
Line 1	2	3	
Line 2	3	4	
Line 3	1	6	Drainage
Line 4	6	7	
Line 5	7	8	
Line 6	8	9	
Line 7	9	10	
Line 8	10	11	
Line 9	11	12	
Line 10	12	5	
Line 11	13	14	
Line 12	14	15	
Line 13	18	19	
Line 14	19	20	
Line 15	20	13	
Line 16	12	21	
Line 17	21	22	
Line 18	22	16	
Line 19	20	23	
Line 20	23	9	

Line 21	23	24	
Line 22	25	6	
Line 23	21	26	
Line 24	26	27	
Line 25	27	28	
Line 26	28	29	
Line 27	29	30	
Line 28	30	31	
Line 29	31	32	Seepage Canal at Elev. 13ft
Line 30	32	33	
Line 31	33	22	
Line 32	35	34	
Line 33	31	36	Seepage Canal at Elev. 13ft
Line 34	36	37	
Line 35	37	30	
Line 36	37	38	
Line 37	38	39	
Line 38	39	35	
Line 39	38	40	
Line 40	40	41	
Line 41	41	39	
Line 42	43	44	
Line 43	44	45	Drainage
Line 44	45	42	
Line 45	46	42	Drainage
Line 46	45	34	Drainage
Line 47	35	47	
Line 48	47	46	
Line 49	39	48	
Line 50	48	47	
Line 51	41	49	
Line 52	49	48	
Line 53	36	50	Seepage Canal at Elev. 13ft
Line 54	50	51	
Line 55	51	37	
Line 56	51	52	
Line 57	52	38	
Line 58	52	53	
Line 59	53	40	
Line 60	23	22	
Line 61	24	33	

Line 62	17	54	
Line 63	54	18	
Line 64	15	55	
Line 65	55	16	
Line 66	16	56	
Line 67	56	17	
Line 68	48	57	
Line 69	49	58	
Line 70	58	57	
Line 71	60	61	
Line 72	64	35	
Line 73	63	34	Drainage
Line 74	65	57	
Line 75	47	66	
Line 76	67	68	Seepage Canal at Elev. 13ft
Line 77	69	65	
Line 78	66	70	Drainage
Line 79	70	46	Drainage
Line 80	71	65	
Line 81	69	72	Drainage
Line 82	72	71	Drainage
Line 83	68	73	Seepage Canal at Elev. 13ft
Line 84	73	69	Drainage
Line 85	66	74	Drainage

Line 86	74	67	Seepage Canal at Elev. 13ft
Line 87	24	75	
Line 88	1	76	
Line 89	76	2	
Line 90	61	77	
Line 91	77	62	
Line 92	76	77	
Line 93	62	1	
Line 94	4	78	
Line 95	78	5	
Line 96	78	60	
Line 97	59	79	
Line 98	79	60	
Line 99	5	80	
Line 100	80	79	
Line 101	26	81	
Line 102	81	80	
Line 103	81	84	
Line 104	84	64	
Line 105	82	83	
Line 106	83	59	
Line 107	64	85	
Line 108	85	63	
Line 109	84	86	

Line 110	86	82	
Line 111	86	85	
Line 112	82	63	Drainage
Line 113	79	77	
Line 114	59	62	Drainage
Line 115	42	43	
Line 116	75	87	
Line 117	87	25	

Regions

	Material	Points	Area (ft²)
Region 1	Matl. 1 - Embankment Material	1,6,7,8,9,10,11,12,5,78,4,3,2,76	993.93
Region 2		13,14,15,55,16,56,17,54,18,19,20	0.18474
Region 3	Matl. 8 - Filter Sand	9,10,11,12,21,22,16,55,15,14,13,20,23	49.637
Region 4	Matl. 5 - Soil Cement Armoring	6,7,8,9,23,24,75,87,25	69.1
Region 5	Matl. 5 - Soil Cement Armoring	22,21,26,27,28,29,30,31,32,33	22.2
Region 6	Matl. 2 - Surficial Overburden Layer	31,36,37,30	46.05
Region 7	Matl. 4 - Deeper Marine Deposits	39,38,40,41	19,019
Region 8	Matl. 1 - Embankment Material	42,43,44,45	104
Region 9	Matl. 2 - Surficial Overburden Layer	46,42,45,34,35,47	135
Region 10	Matl. 3 - Shallow Alluvial Deposits	47,35,39,48	2,515.5
Region 11	Matl. 4 - Deeper Marine Deposits	48,39,41,49	9,004.5
Region 12	Matl. 2 - Surficial Overburden Layer	36,50,51,37	1,500
Region 13	Matl. 3 - Shallow Alluvial Deposits	37,51,52,38	27,950
Region 14	Matl. 4 - Deeper Marine Deposits	38,52,53,40	1.0005e+005
Region 15	Matl. 8 - Filter Sand	20,23,22,16,56,17,54,18,19	1.5978
Region 16	Matl. 5 - Soil Cement Armoring	23,24,33,22	1.6
		57,48,49,58	1.02e+005

Region 17	Matl. 4 - Deeper Marine Deposits		
Region 18	Matl. 3 - Shallow Alluvial Deposits	35,39,38,37,30,29,28,27,26,81,84,64	5,297
Region 19	Matl. 2 - Surficial Overburden Layer	34,35,64,85,63	19.5
Region 20	Matl. 3 - Shallow Alluvial Deposits	65,57,48,47,66,74,67,68,73,69	26,978
Region 21	Matl. 2 - Surficial Overburden Layer	66,70,46,47	78.375
Region 22	Matl. 2 - Surficial Overburden Layer	71,65,69,72	1,233.4
Region 23	Matl. 9 Concrete Outfall Works	76,77,62,1	1
Region 24	Matl. 8 - Filter Sand	76,2,3,4,78,60,61,77	69
Region 25	Matl. 8 - Filter Sand	79,60,78,5,80	41
Region 26	Matl. 2 - Surficial Overburden Layer	80,5,12,21,26,81	167.7
Region 27	Matl. 9 Concrete Outfall Works	82,83,59,79,80,81,84,86	16
Region 28	Matl. 8 - Filter Sand	85,64,84,86	10.875
Region 29	Matl. 6 - Fine Drainage Gravel	63,85,86,82	10.875
Region 30	Matl. 6 - Fine Drainage Gravel	77,61,60,79	40
Region 31	Matl. 6 - Fine Drainage Gravel	62,77,79,59	1

Steady-State Seepage NP (LT SSS)

Report generated using GeoStudio 2012. Copyright © 1991-2013 GEO-SLOPE International Ltd.

File Information

Title: LOWP PIR Analysis Section B
Created By: Viessman, Michael W CIV USARMY CESAJ (US)
Last Edited By: Viessman, Michael W CIV USARMY CESAJ (US)
Revision Number: 559
File Version: 8.2
Tool Version: 8.12.3.7901
Date: 8/26/2018
Time: 5:01:58 PM
File Name: Section B EOC USP w toe drain.gsz
Directory: C:\Users\k3engmwv\Documents\LOWP\FY17-18 PIR Work\SEEP and SLOPEW Files\
Last Solved Date: 8/26/2018
Last Solved Time: 4:02:28 PM

Project Settings

Length(L) Units: feet
Time(t) Units: Seconds
Force(F) Units: lbf
Pressure(p) Units: psf
Mass(M) Units: lbs
Mass Flux Units: lbs/sec
Unit Weight of Water: 62.4 pcf
View: 2D
Element Thickness: 1

Analysis Settings

Steady-State Seepage NP (LT SSS)

Description: U/S NP pool, toe drain, canal at wse 13ft
Kind: SEEP/W
Method: Steady-State
Settings
    Include Air Flow: No
Control
    Apply Runoff: Yes
Convergence
    Maximum Number of Iterations: 1,000
    Minimum Pressure Head Difference: 0.005
    Significant Digits: 2

Max # of Reviews: 10
Hydraulic Under-Relaxation Criteria
Under-Relaxation Initial Rate: 1
Under-Relaxation Min. Rate: 0.1
Under-Relaxation Reduction Rate: 0.65
Under-Relaxation Iterations: 10
Equation Solver: Parallel Direct
Time
Starting Time: 0 sec
Duration: 0 sec
Ending Time: 0 sec

Materials

Matl. 1 - Embankment Material

Model: Saturated / Unsaturated
Hydraulic
K-Function: Matl. 1 Embankment Material
Ky'/Kx' Ratio: 0.25
Rotation: 0 °
Vol. WC. Function: Matl. 1 Embankment Fill from Borrow Areas

Matl. 2 - Surficial Overburden Layer

Model: Saturated / Unsaturated
Hydraulic
K-Function: Matl. 2 Surficial Overburden Layer
Ky'/Kx' Ratio: 0.1
Rotation: 0 °
Vol. WC. Function: Matl. 2 Surficial Overburden Layer

Matl. 3 - Shallow Alluvial Deposits

Model: Saturated / Unsaturated
Hydraulic
K-Function: Matl. 3 Shallow Alluvial Deposits
Ky'/Kx' Ratio: 0.1
Rotation: 0 °
Vol. WC. Function: Matl. 3 Shallow Alluvial Deposits

Matl. 4 - Deeper Marine Deposits

Model: Saturated / Unsaturated
Hydraulic
K-Function: Matl. 4 Deeper Marine Deposits
Ky'/Kx' Ratio: 0.1
Rotation: 0 °
Vol. WC. Function: Matl. 4 Deeper Marine Deposits

Matl. 5 - Soil Cement Armoring

Model: Saturated / Unsaturated
Hydraulic
K-Function: Matl. 5 Soil Cement Armoring
Ky'/Kx' Ratio: 1
Rotation: 0 °
Vol. WC. Function: Matl. 5 Soil Cement Armoring

Matl. 6 - Fine Drainage Gravel

Model: Saturated / Unsaturated
Hydraulic
K-Function: Matl. 6 Fine Drainage Gravel
Ky'/Kx' Ratio: 1
Rotation: 0 °
Vol. WC. Function: Mat. 6 Fine Drainage Gravel (No 89)

Matl. 8 - Filter Sand

Model: Saturated / Unsaturated
Hydraulic
K-Function: Matl. 8 Filter Sand
Ky'/Kx' Ratio: 1
Rotation: 0 °
Vol. WC. Function: Matl. 8 Filter Sand (C33)

Matl. 9 Concrete Outfall Works

Model: Saturated Only
Hydraulic
K-Sat: 3.28e-010 ft/sec
Ky'/Kx' Ratio: 1
Rotation: 0 °
Volumetric Water Content: 0.3 ft^3/ft^3
Mv: 1e-008 /psf

Boundary Conditions

K-05 WAF Normal Pool at Elev. 25ft

Type: Head (H) 25
Review: No

Drainage

Type: Total Flux (Q) 0
Review: Yes

Seepage Canal at Elev. 13ft

Type: Head (H) 13
Review: No

Flux Sections

Flux Section 1

Coordinates

Coordinate: (-53.387097, 20.026507) ft
Coordinate: (-53.387097, 18.965214) ft

Flux Section 2

Coordinates

Coordinate: (-77.145669, 18.00689) ft
Coordinate: (-77.130906, 16.397638) ft
Coordinate: (-62.322835, 16.373031) ft
Coordinate: (-62.322835, 16.63878) ft

Flux Section 3

Coordinates

Coordinate: (0, 36.6) ft
Coordinate: (0, -112.3) ft

Flux Section 4

Coordinates

Coordinate: (-382.8, 18.2) ft
Coordinate: (-319.7, -3.4) ft
Coordinate: (-289.2, -3.3) ft
Coordinate: (-228.6, 17.7) ft

Flux Section 5

Coordinates

Coordinate: (-399.8, 18) ft
Coordinate: (-400.1, -112.4) ft

K Functions

Matl. 1 Embankment Material

Model: Hyd K Data Point Function
Function: X-Conductivity vs. Pore-Water Pressure
Curve Fit to Data: 100 %
Segment Curvature: 36 %
K-Saturation: 0.000131
Data Points: Matric Suction (psf), X-Conductivity (ft/sec)
Data Point: (0.01, 0.000131)
Data Point: (0.018329807, 0.00013099927)
Data Point: (0.033598183, 0.00013099852)
Data Point: (0.061584821, 0.00013099772)
Data Point: (0.11288379, 0.00013099684)
Data Point: (0.20691381, 0.00013099581)

Data Point: (0.37926902, 0.0001309945)
Data Point: (0.6951928, 0.00013099268)
Data Point: (1.274275, 0.00013098992)
Data Point: (2.3357215, 0.00013098549)
Data Point: (4.2813324, 0.0001309777)
Data Point: (7.8475997, 0.00013096339)
Data Point: (14.384499, 0.00013094955)
Data Point: (26.366509, 0.00013089452)
Data Point: (48.329302, 0.00013043835)
Data Point: (88.586679, 0.00012910123)
Data Point: (162.37767, 5.664247e-005)
Data Point: (297.63514, 2.5159921e-006)
Data Point: (545.55948, 4.7485927e-008)
Data Point: (1,000, 1.7886028e-009)

Estimation Properties

Hyd. K-Function Estimation Method: Fredlund-Xing Function
Volume Water Content Function: Matl. 1 Embankment Fill from Borrow Areas
Hydraulic K Sat: 0.000131 ft/sec
Residual Water Content: 0.0495 ft^3/ft^3
Maximum: 1,000
Minimum: 0.01
Num. Points: 20

Matl. 4 Deeper Marine Deposits

Model: Hyd K Data Point Function
Function: X-Conductivity vs. Pore-Water Pressure
Curve Fit to Data: 100 %
Segment Curvature: 44 %
K-Saturation: 0.000984
Data Points: Matric Suction (psf), X-Conductivity (ft/sec)
Data Point: (0.01, 0.000984)
Data Point: (0.018329807, 0.00098398585)
Data Point: (0.033598183, 0.00098397151)
Data Point: (0.061584821, 0.00098395679)
Data Point: (0.11288379, 0.00098394139)
Data Point: (0.20691381, 0.00098392476)
Data Point: (0.37926902, 0.00098390584)
Data Point: (0.6951928, 0.00098388274)
Data Point: (1.274275, 0.00098385199)
Data Point: (2.3357215, 0.0009838074)
Data Point: (4.2813324, 0.00098373618)
Data Point: (7.8475997, 0.00098361453)
Data Point: (14.384499, 0.0009834543)
Data Point: (26.366509, 0.00098304118)
Data Point: (48.329302, 0.00098089274)
Data Point: (88.586679, 0.00098804841)
Data Point: (162.37767, 0.00089693201)
Data Point: (297.63514, 0.00029836287)

Data Point: (545.55948, 5.5741791e-006)
Data Point: (1,000, 8.8545842e-008)
Estimation Properties
Hyd. K-Function Estimation Method: Fredlund-Xing Function
Volume Water Content Function: Matl. 4 Deeper Marine Deposits
Hydraulic K Sat: 0.000984 ft/sec
Residual Water Content: 0.03 ft^3/ft^3
Maximum: 1,000
Minimum: 0.01
Num. Points: 20

Matl. 6 Fine Drainage Gravel

Model: Hyd K Data Point Function
Function: X-Conductivity vs. Pore-Water Pressure
Curve Fit to Data: 100 %
Segment Curvature: 40 %
K-Saturation: 0.0116
Data Points: Matric Suction (psf), X-Conductivity (ft/sec)
Data Point: (0.01, 0.0116)
Data Point: (0.018329807, 0.011599999)
Data Point: (0.033598183, 0.011599999)
Data Point: (0.061584821, 0.011599997)
Data Point: (0.11288379, 0.011599992)
Data Point: (0.20691381, 0.011599991)
Data Point: (0.37926902, 0.011600028)
Data Point: (0.6951928, 0.011599657)
Data Point: (1.274275, 0.011599409)
Data Point: (2.3357215, 0.011606742)
Data Point: (4.2813324, 0.01023118)
Data Point: (7.8475997, 0.0019666911)
Data Point: (14.384499, 3.3083667e-005)
Data Point: (26.366509, 3.5079262e-007)
Data Point: (48.329302, 1.0209264e-008)
Data Point: (88.586679, 1.7809046e-009)
Data Point: (162.37767, 3.7872508e-010)
Data Point: (297.63514, 7.9282799e-011)
Data Point: (545.55948, 1.3312429e-011)
Data Point: (1,000, 1.2335483e-012)
Estimation Properties
Hyd. K-Function Estimation Method: Fredlund-Xing Function
Volume Water Content Function: Mat. 6 Fine Drainage Gravel (No 89)
Hydraulic K Sat: 0.0116 ft/sec
Residual Water Content: 0.042 ft^3/ft^3
Maximum: 1,000
Minimum: 0.01
Num. Points: 20

Matl. 2 Surficial Overburden Layer

Model: Hyd K Data Point Function
Function: X-Conductivity vs. Pore-Water Pressure
Curve Fit to Data: 100 %
Segment Curvature: 36 %
K-Saturation: 0.00026
Data Points: Matric Suction (psf), X-Conductivity (ft/sec)
Data Point: (0.01, 0.00026)
Data Point: (0.018329807, 0.00025999835)
Data Point: (0.033598183, 0.00025999664)
Data Point: (0.061584821, 0.00025999485)
Data Point: (0.11288379, 0.00025999288)
Data Point: (0.20691381, 0.00025999062)
Data Point: (0.37926902, 0.00025998779)
Data Point: (0.6951928, 0.00025998393)
Data Point: (1.274275, 0.00025997819)
Data Point: (2.3357215, 0.00025996907)
Data Point: (4.2813324, 0.00025995329)
Data Point: (7.8475997, 0.00025992467)
Data Point: (14.384499, 0.00025989276)
Data Point: (26.366509, 0.00025978642)
Data Point: (48.329302, 0.00025903344)
Data Point: (88.586679, 0.0002586222)
Data Point: (162.37767, 0.00013432217)
Data Point: (297.63514, 8.1547435e-006)
Data Point: (545.55948, 1.3663567e-007)
Data Point: (1,000, 4.5608744e-009)
Estimation Properties
Hyd. K-Function Estimation Method: Fredlund-Xing Function
Volume Water Content Function: Matl. 2 Surficial Overburden Layer
Hydraulic K Sat: 0.00026 ft/sec
Residual Water Content: 0.0495 ft^3/ft^3
Maximum: 1,000
Minimum: 0.01
Num. Points: 20

Matl. 3 Shallow Alluvial Deposits

Model: Hyd K Data Point Function
Function: X-Conductivity vs. Pore-Water Pressure
Curve Fit to Data: 100 %
Segment Curvature: 36 %
K-Saturation: 0.00174
Data Points: Matric Suction (psf), X-Conductivity (ft/sec)
Data Point: (0.01, 0.00174)
Data Point: (0.018329807, 0.0017399903)
Data Point: (0.033598183, 0.0017399803)
Data Point: (0.061584821, 0.0017399698)

Data Point: (0.11288379, 0.0017399581)
Data Point: (0.20691381, 0.0017399444)
Data Point: (0.37926902, 0.0017399269)
Data Point: (0.6951928, 0.0017399027)
Data Point: (1.274275, 0.0017398661)
Data Point: (2.3357215, 0.0017398072)
Data Point: (4.2813324, 0.0017397038)
Data Point: (7.8475997, 0.0017395137)
Data Point: (14.384499, 0.0017393299)
Data Point: (26.366509, 0.001738599)
Data Point: (48.329302, 0.0017325399)
Data Point: (88.586679, 0.0017147796)
Data Point: (162.37767, 0.00075235037)
Data Point: (297.63514, 3.3418521e-005)
Data Point: (545.55948, 6.307291e-007)
Data Point: (1,000, 2.3757014e-008)

Estimation Properties

Hyd. K-Function Estimation Method: Fredlund-Xing Function
Volume Water Content Function: Matl. 3 Shallow Alluvial Deposits
Hydraulic K Sat: 0.00174 ft/sec
Residual Water Content: 0.0495 ft^3/ft^3
Maximum: 1,000
Minimum: 0.01
Num. Points: 20

Matl. 5 Soil Cement Armoring

Model: Hyd K Data Point Function
Function: X-Conductivity vs. Pore-Water Pressure

Curve Fit to Data: 100 %
Segment Curvature: 44 %

K-Saturation: 1.31e-005
Data Points: Matric Suction (psf), X-Conductivity (ft/sec)

Data Point: (0.01, 1.31e-005)
Data Point: (0.018329807, 1.3099927e-005)
Data Point: (0.033598183, 1.3099852e-005)
Data Point: (0.061584821, 1.3099772e-005)
Data Point: (0.11288379, 1.3099684e-005)
Data Point: (0.20691381, 1.3099581e-005)
Data Point: (0.37926902, 1.309945e-005)
Data Point: (0.6951928, 1.3099268e-005)
Data Point: (1.274275, 1.3098992e-005)
Data Point: (2.3357215, 1.3098549e-005)
Data Point: (4.2813324, 1.309777e-005)
Data Point: (7.8475997, 1.3096339e-005)
Data Point: (14.384499, 1.3094955e-005)
Data Point: (26.366509, 1.3089452e-005)
Data Point: (48.329302, 1.3043835e-005)
Data Point: (88.586679, 1.2910123e-005)

Data Point: (162.37767, 5.664247e-006)
Data Point: (297.63514, 2.5159921e-007)
Data Point: (545.55948, 4.7485927e-009)
Data Point: (1,000, 1.7886028e-010)

Estimation Properties

Hyd. K-Function Estimation Method: Fredlund-Xing Function
Volume Water Content Function: Matl. 5 Soil Cement Armoring
Hydraulic K Sat: 1.31e-005 ft/sec
Residual Water Content: 0.03 ft^3/ft^3
Maximum: 1,000
Minimum: 0.01
Num. Points: 20

Matl. 8 Filter Sand

Model: Hyd K Data Point Function
Function: X-Conductivity vs. Pore-Water Pressure

Curve Fit to Data: 100 %
Segment Curvature: 44 %

K-Saturation: 0.000925
Data Points: Matric Suction (psf), X-Conductivity (ft/sec)

Data Point: (0.01, 0.000925)
Data Point: (0.018329807, 0.00092499993)
Data Point: (0.033598183, 0.00092499981)
Data Point: (0.061584821, 0.0009249996)
Data Point: (0.11288379, 0.00092499919)
Data Point: (0.20691381, 0.00092499854)
Data Point: (0.37926902, 0.00092499785)
Data Point: (0.6951928, 0.00092499117)
Data Point: (1.274275, 0.00092498427)
Data Point: (2.3357215, 0.00092515575)
Data Point: (4.2813324, 0.00092444336)
Data Point: (7.8475997, 0.00092025484)
Data Point: (14.384499, 0.00086768248)
Data Point: (26.366509, 0.00022215817)
Data Point: (48.329302, 5.6149022e-006)
Data Point: (88.586679, 9.4931606e-008)
Data Point: (162.37767, 4.4270536e-009)
Data Point: (297.63514, 6.3580973e-010)
Data Point: (545.55948, 1.1244323e-010)
Data Point: (1,000, 1.0762229e-011)

Estimation Properties

Hyd. K-Function Estimation Method: Fredlund-Xing Function
Volume Water Content Function: Matl. 8 Filter Sand (C33)
Hydraulic K Sat: 0.000925 ft/sec
Residual Water Content: 0.03 ft^3/ft^3
Maximum: 1,000
Minimum: 0.01
Num. Points: 20

Vol. Water Content Functions

Matl. 3 Shallow Alluvial Deposits

Model: Vol WC Data Point Function
Function: Vol. Water Content vs. Pore-Water Pressure
Mv: 2.5e-006 /psf
Saturated Water Content: 0.30020276 ft^3/ft^3
Residual Water Content: 0.030020276 ft^3/ft^3
Curve Fit to Data: 100 %
Segment Curvature: 40 %
Porosity: 0.30020276
Data Points: Matric Suction (psf), Vol. Water Content (ft^3/ft^3)
Data Point: (0.01, 0.29987196)
Data Point: (0.018329807, 0.29987196)
Data Point: (0.033598183, 0.29987196)
Data Point: (0.061584821, 0.29987196)
Data Point: (0.11288379, 0.29987196)
Data Point: (0.20691381, 0.29987196)
Data Point: (0.37926902, 0.29987196)
Data Point: (0.6951928, 0.29987196)
Data Point: (1.274275, 0.29987196)
Data Point: (2.3357215, 0.29987196)
Data Point: (4.2813324, 0.29987196)
Data Point: (7.8475997, 0.29987196)
Data Point: (14.384499, 0.29987196)
Data Point: (26.366509, 0.29987196)
Data Point: (48.329302, 0.29987196)
Data Point: (88.586679, 0.29667682)
Data Point: (162.37767, 0.20150036)
Data Point: (297.63514, 0.085811521)
Data Point: (545.55948, 0.049379583)
Data Point: (1,000, 0.039446735)
Estimation Properties
Vol. WC Estimation Method: Grain Size Function
Saturated Water Content: 0.3 ft^3/ft^3
Sample Material: Clay
Liquid Limit: 0 %
Diameter at 10% passing: 0.07000000000000001
Diameter at 60% passing: 0.2
Maximum: 1,000
Minimum: 0.01
Num. Points: 20

Matl. 1 Embankment Fill from Borrow Areas

Model: Vol WC Data Point Function
Function: Vol. Water Content vs. Pore-Water Pressure
Mv: 2.5e-006 /psf

Saturated Water Content: 0.30020276 ft^3/ft^3
Residual Water Content: 0.030020276 ft^3/ft^3
Curve Fit to Data: 100 %
Segment Curvature: 40 %
Porosity: 0.30020276
Data Points: Matric Suction (psf), Vol. Water Content (ft^3/ft^3)
Data Point: (0.01, 0.29987196)
Data Point: (0.018329807, 0.29987196)
Data Point: (0.033598183, 0.29987196)
Data Point: (0.061584821, 0.29987196)
Data Point: (0.11288379, 0.29987196)
Data Point: (0.20691381, 0.29987196)
Data Point: (0.37926902, 0.29987196)
Data Point: (0.6951928, 0.29987196)
Data Point: (1.274275, 0.29987196)
Data Point: (2.3357215, 0.29987196)
Data Point: (4.2813324, 0.29987196)
Data Point: (7.8475997, 0.29987196)
Data Point: (14.384499, 0.29987196)
Data Point: (26.366509, 0.29987196)
Data Point: (48.329302, 0.29987196)
Data Point: (88.586679, 0.29667682)
Data Point: (162.37767, 0.20150036)
Data Point: (297.63514, 0.085811521)
Data Point: (545.55948, 0.049379583)
Data Point: (1,000, 0.039446735)
Estimation Properties
Vol. WC Estimation Method: Grain Size Function
Saturated Water Content: 0.3 ft^3/ft^3
Sample Material: Clay
Liquid Limit: 0 %
Diameter at 10% passing: 0.07000000000000001
Diameter at 60% passing: 0.2
Maximum: 1,000
Minimum: 0.01
Num. Points: 20

Matl. 2 Surficial Overburden Layer

Model: Vol WC Data Point Function
Function: Vol. Water Content vs. Pore-Water Pressure
Mv: 2.5e-006 /psf
Saturated Water Content: 0.30132774 ft^3/ft^3
Residual Water Content: 0.030132774 ft^3/ft^3
Curve Fit to Data: 100 %
Segment Curvature: 40 %
Porosity: 0.30132774
Data Points: Matric Suction (psf), Vol. Water Content (ft^3/ft^3)
Data Point: (0.01, 0.30110223)

Data Point: (0.018329807, 0.30110223)
Data Point: (0.033598183, 0.30110223)
Data Point: (0.061584821, 0.30110223)
Data Point: (0.11288379, 0.30110223)
Data Point: (0.20691381, 0.30110223)
Data Point: (0.37926902, 0.30110223)
Data Point: (0.6951928, 0.30110223)
Data Point: (1.274275, 0.30110223)
Data Point: (2.3357215, 0.30110223)
Data Point: (4.2813324, 0.30110223)
Data Point: (7.8475997, 0.30110223)
Data Point: (14.384499, 0.30110223)
Data Point: (26.366509, 0.30110223)
Data Point: (48.329302, 0.30110223)
Data Point: (88.586679, 0.29938489)
Data Point: (162.37767, 0.21986255)
Data Point: (297.63514, 0.094851578)
Data Point: (545.55948, 0.051777012)
Data Point: (1,000, 0.040605935)

Estimation Properties
Vol. WC Estimation Method: Grain Size Function
Saturated Water Content: 0.3 ft^3/ft^3
Sample Material: Clay
Liquid Limit: 0 %
Diameter at 10% passing: 0.07000000000000001
Diameter at 60% passing: 0.18
Maximum: 1,000
Minimum: 0.01
Num. Points: 20

Matl. 8 Filter Sand (C33)

Model: Vol WC Data Point Function
Function: Vol. Water Content vs. Pore-Water Pressure
Mv: 8e-007 /psf
Saturated Water Content: 0.30081752 ft^3/ft^3
Residual Water Content: 0.030081752 ft^3/ft^3
Curve Fit to Data: 100 %
Segment Curvature: 48 %
Porosity: 0.30081752
Data Points: Matric Suction (psf), Vol. Water Content (ft^3/ft^3)
Data Point: (0.01, 0.30028388)
Data Point: (0.018329807, 0.30028388)
Data Point: (0.033598183, 0.30028388)
Data Point: (0.061584821, 0.30028388)
Data Point: (0.11288379, 0.30028388)
Data Point: (0.20691381, 0.30028388)
Data Point: (0.37926902, 0.30028388)
Data Point: (0.6951928, 0.30028388)

Data Point: (1.274275, 0.30028388)
Data Point: (2.3357215, 0.30028388)
Data Point: (4.2813324, 0.30028388)
Data Point: (7.8475997, 0.30028388)
Data Point: (14.384499, 0.28112842)
Data Point: (26.366509, 0.15065712)
Data Point: (48.329302, 0.048430554)
Data Point: (88.586679, 0.021674388)
Data Point: (162.37767, 0.016081301)
Data Point: (297.63514, 0.013674367)
Data Point: (545.55948, 0.011770874)
Data Point: (1,000, 0.010084825)

Estimation Properties

Vol. WC Estimation Method: Grain Size Function
Saturated Water Content: 0.3 ft^3/ft^3
Sample Material: Gravel
Liquid Limit: 0 %
Diameter at 10% passing: 0.38
Diameter at 60% passing: 1.6
Maximum: 1,000
Minimum: 0.01
Num. Points: 20

Mat. 6 Fine Drainage Gravel (No 89)

Model: Vol WC Data Point Function
Function: Vol. Water Content vs. Pore-Water Pressure

Mv: 4e-007 /psf
Saturated Water Content: 0.21947752 ft^3/ft^3
Residual Water Content: 0.021947752 ft^3/ft^3
Curve Fit to Data: 100 %
Segment Curvature: 48 %

Porosity: 0.21947752
Data Points: Matric Suction (psf), Vol. Water Content (ft^3/ft^3)

Data Point: (0.01, 0.21916427)
Data Point: (0.018329807, 0.21916427)
Data Point: (0.033598183, 0.21916427)
Data Point: (0.061584821, 0.21916427)
Data Point: (0.11288379, 0.21916427)
Data Point: (0.20691381, 0.21916427)
Data Point: (0.37926902, 0.21916427)
Data Point: (0.6951928, 0.21916427)
Data Point: (1.274275, 0.21916427)
Data Point: (2.3357215, 0.21916427)
Data Point: (4.2813324, 0.20182012)
Data Point: (7.8475997, 0.090949254)
Data Point: (14.384499, 0.021737158)
Data Point: (26.366509, 0.0080845337)
Data Point: (48.329302, 0.0057554944)

Data Point: (88.586679, 0.0048689464)
Data Point: (162.37767, 0.0041947283)
Data Point: (297.63514, 0.0036057207)
Data Point: (545.55948, 0.0030872724)
Data Point: (1,000, 0.002632805)
Estimation Properties
Vol. WC Estimation Method: Grain Size Function
Saturated Water Content: 0.21875 ft^3/ft^3
Sample Material: Clay
Liquid Limit: 0 %
Diameter at 10% passing: 3.5
Diameter at 60% passing: 7.1
Maximum: 1,000
Minimum: 0.01
Num. Points: 20

Matl. 4 Deeper Marine Deposits

Model: Vol WC Data Point Function
Function: Vol. Water Content vs. Pore-Water Pressure
Mv: 2.5e-006 /psf
Saturated Water Content: 0.30154597 ft^3/ft^3
Residual Water Content: 0.030154597 ft^3/ft^3
Curve Fit to Data: 100 %
Segment Curvature: 40 %
Porosity: 0.30154597
Data Points: Matric Suction (psf), Vol. Water Content (ft^3/ft^3)
Data Point: (0.01, 0.30100508)
Data Point: (0.018329807, 0.30100508)
Data Point: (0.033598183, 0.30100508)
Data Point: (0.061584821, 0.30100508)
Data Point: (0.11288379, 0.30100508)
Data Point: (0.20691381, 0.30100508)
Data Point: (0.37926902, 0.30100508)
Data Point: (0.6951928, 0.30100508)
Data Point: (1.274275, 0.30100508)
Data Point: (2.3357215, 0.30100508)
Data Point: (4.2813324, 0.30100508)
Data Point: (7.8475997, 0.30100508)
Data Point: (14.384499, 0.30100508)
Data Point: (26.366509, 0.30100508)
Data Point: (48.329302, 0.30100508)
Data Point: (88.586679, 0.30100508)
Data Point: (162.37767, 0.2887592)
Data Point: (297.63514, 0.17412515)
Data Point: (545.55948, 0.076942285)
Data Point: (1,000, 0.051397358)
Estimation Properties
Vol. WC Estimation Method: Grain Size Function

Saturated Water Content: 0.3 ft^3/ft^3
Sample Material: Clay
Liquid Limit: 0 %
Diameter at 10% passing: 0.06
Diameter at 60% passing: 0.11
Maximum: 1,000
Minimum: 0.01
Num. Points: 20

Matl. 5 Soil Cement Armoring

Model: Vol WC Data Point Function
Function: Vol. Water Content vs. Pore-Water Pressure
Mv: 2.5e-006 /psf
Saturated Water Content: 0.30020276 ft^3/ft^3
Residual Water Content: 0.030020276 ft^3/ft^3
Curve Fit to Data: 100 %
Segment Curvature: 40 %
Porosity: 0.30020276
Data Points: Matric Suction (psf), Vol. Water Content (ft^3/ft^3)
Data Point: (0.01, 0.29987196)
Data Point: (0.018329807, 0.29987196)
Data Point: (0.033598183, 0.29987196)
Data Point: (0.061584821, 0.29987196)
Data Point: (0.11288379, 0.29987196)
Data Point: (0.20691381, 0.29987196)
Data Point: (0.37926902, 0.29987196)
Data Point: (0.6951928, 0.29987196)
Data Point: (1.274275, 0.29987196)
Data Point: (2.3357215, 0.29987196)
Data Point: (4.2813324, 0.29987196)
Data Point: (7.8475997, 0.29987196)
Data Point: (14.384499, 0.29987196)
Data Point: (26.366509, 0.29987196)
Data Point: (48.329302, 0.29987196)
Data Point: (88.586679, 0.29667682)
Data Point: (162.37767, 0.20150036)
Data Point: (297.63514, 0.085811521)
Data Point: (545.55948, 0.049379583)
Data Point: (1,000, 0.039446735)
Estimation Properties
Vol. WC Estimation Method: Grain Size Function
Saturated Water Content: 0.3 ft^3/ft^3
Sample Material: Clay
Liquid Limit: 0 %
Diameter at 10% passing: 0.07000000000000001
Diameter at 60% passing: 0.2
Maximum: 1,000
Minimum: 0.01

Num. Points: 20

Points

	X (ft)	Y (ft)
Point 1	-53.5	21
Point 2	-14.5	21
Point 3	-14.5	30
Point 4	-11.5	30
Point 5	-11.5	18
Point 6	-7	36.5
Point 7	-7	35.5
Point 8	6.8	35.5
Point 9	14	33
Point 10	13.7	32.1
Point 11	48.6	20.5
Point 12	51.2	18
Point 13	52.0033	19.4828
Point 14	51.9	19.4
Point 15	51.8636	19.2065
Point 16	52.097	19.0075
Point 17	52.3031	19.0832
Point 18	52.3561	19.2916
Point 19	52.3	19.4
Point 20	52.1797	19.4906
Point 21	59.3	18
Point 22	56.3	19
Point 23	54.8	19.5
Point 24	58	19.5
Point 25	7	36.5
Point 26	59.3	16.5
Point 27	67.3	16.5
Point 28	67.3	14.5
Point 29	69.3	14.5
Point 30	69.3	16.5
Point 31	69.3	18

Point 32	62.5	18
Point 33	59.5	19
Point 34	-90	18
Point 35	-90	16.5
Point 36	100	18
Point 37	100	16.5
Point 38	100	-11.4
Point 39	-90	-11.4
Point 40	100	-111.5
Point 41	-90	-111.5
Point 42	-139	18
Point 43	-127	22
Point 44	-113	22
Point 45	-101	18
Point 46	-180	18
Point 47	-180	16.5
Point 48	-180	-11.5
Point 49	-180	-111.5
Point 50	1,100	18
Point 51	1,100	16.5
Point 52	1,100	-11.5
Point 53	1,100	-111.5
Point 54	52.3546	19.1839
Point 55	51.9487	19.066
Point 56	52.2227	19.0254
Point 57	-1,200	-11.5
Point 58	-1,200	-111.5
Point 59	-53.5	19
Point 60	-12.5	19
Point 61	-12.5	20
Point 62	-53.5	20
Point 63	-77	18
Point 64	-77	16.5
Point 65	-1,200	16.5
Point 66	-234.5	16.5
Point 67	-290	-2

Point 68	-320	-2
Point 69	-375.5	16.5
Point 70	-230	18
Point 71	-1,200	18
Point 72	-380	18
Point 73	-365	13
Point 74	-245	13
Point 75	41.5	25
Point 76	-52.5	21
Point 77	-52.5	20
Point 78	-11.5	19
Point 79	-52.5	19
Point 80	-52.5	18
Point 81	-52.5	16.5
Point 82	-62.5	18
Point 83	-53.5	18
Point 84	-62.5	16.5
Point 85	-77	17.25
Point 86	-62.5	17.25
Point 87	29.5	29

Lines

	Start Point	End Point	Hydraulic Boundary
Line 1	2	3	
Line 2	3	4	
Line 3	1	6	Drainage
Line 4	6	7	
Line 5	7	8	
Line 6	8	9	
Line 7	9	10	
Line 8	10	11	
Line 9	11	12	
Line 10	12	5	
Line 11	13	14	
Line 12	14	15	

Line 13	18	19	
Line 14	19	20	
Line 15	20	13	
Line 16	12	21	
Line 17	21	22	
Line 18	22	16	
Line 19	20	23	
Line 20	23	9	
Line 21	23	24	
Line 22	25	6	
Line 23	21	26	
Line 24	26	27	
Line 25	27	28	
Line 26	28	29	
Line 27	29	30	
Line 28	30	31	
Line 29	31	32	K-05 WAF Normal Pool at Elev. 25ft
Line 30	32	33	K-05 WAF Normal Pool at Elev. 25ft
Line 31	33	22	
Line 32	35	34	
Line 33	31	36	K-05 WAF Normal Pool at Elev. 25ft
Line 34	36	37	
Line 35	37	30	
Line 36	37	38	
Line 37	38	39	
Line 38	39	35	
Line 39	38	40	
Line 40	40	41	
Line 41	41	39	
Line 42	43	44	
Line 43	44	45	Drainage
Line 44	45	42	
Line 45	46	42	Drainage
Line 46	45	34	Drainage
Line 47	35	47	
Line 48	47	46	

Line 49	39	48	
Line 50	48	47	
Line 51	41	49	
Line 52	49	48	
Line 53	36	50	K-05 WAF Normal Pool at Elev. 25ft
Line 54	50	51	
Line 55	51	37	
Line 56	51	52	
Line 57	52	38	
Line 58	52	53	
Line 59	53	40	
Line 60	23	22	
Line 61	24	33	K-05 WAF Normal Pool at Elev. 25ft
Line 62	17	54	
Line 63	54	18	
Line 64	15	55	
Line 65	55	16	
Line 66	16	56	
Line 67	56	17	
Line 68	48	57	
Line 69	49	58	
Line 70	58	57	
Line 71	60	61	
Line 72	64	35	
Line 73	63	34	Drainage
Line 74	65	57	
Line 75	47	66	
Line 76	67	68	Seepage Canal at Elev. 13ft
Line 77	69	65	
Line 78	66	70	Drainage
Line 79	70	46	Drainage
Line 80	71	65	
Line 81	69	72	Drainage
Line 82	72	71	Drainage
Line 83	68	73	Seepage Canal at Elev. 13ft
Line 84	73	69	Drainage

Line 85	66	74	Drainage
Line 86	74	67	Seepage Canal at Elev. 13ft
Line 87	24	75	K-05 WAF Normal Pool at Elev. 25ft
Line 88	1	76	
Line 89	76	2	
Line 90	61	77	
Line 91	77	62	
Line 92	76	77	
Line 93	62	1	
Line 94	4	78	
Line 95	78	5	
Line 96	78	60	
Line 97	59	79	
Line 98	79	60	
Line 99	5	80	
Line 100	80	79	
Line 101	26	81	
Line 102	81	80	
Line 103	81	84	
Line 104	84	64	
Line 105	82	83	
Line 106	83	59	
Line 107	64	85	
Line 108	85	63	
Line 109	84	86	
Line 110	86	82	
Line 111	86	85	
Line 112	82	63	Drainage
Line 113	79	77	
Line 114	59	62	Drainage
Line 115	42	43	
Line 116	75	87	
Line 117	87	25	

Regions

	Material	Points	Area (ft²)
Region 1	Matl. 1 - Embankment Material	1,6,7,8,9,10,11,12,5,78,4,3,2,76	993.93
Region 2		13,14,15,55,16,56,17,54,18,19,20	0.18474
Region 3	Matl. 8 - Filter Sand	9,10,11,12,21,22,16,55,15,14,13,20,23	49.637
Region 4	Matl. 5 - Soil Cement Armoring	6,7,8,9,23,24,75,87,25	69.1
Region 5	Matl. 5 - Soil Cement Armoring	22,21,26,27,28,29,30,31,32,33	22.2
Region 6	Matl. 2 - Surficial Overburden Layer	31,36,37,30	46.05
Region 7	Matl. 4 - Deeper Marine Deposits	39,38,40,41	19,019
Region 8	Matl. 1 - Embankment Material	42,43,44,45	104
Region 9	Matl. 2 - Surficial Overburden Layer	46,42,45,34,35,47	135
Region 10	Matl. 3 - Shallow Alluvial Deposits	47,35,39,48	2,515.5
Region 11	Matl. 4 - Deeper Marine Deposits	48,39,41,49	9,004.5
Region 12	Matl. 2 - Surficial Overburden Layer	36,50,51,37	1,500
Region 13	Matl. 3 - Shallow Alluvial Deposits	37,51,52,38	27,950
Region 14	Matl. 4 - Deeper Marine Deposits	38,52,53,40	1.0005e+005
Region 15	Matl. 8 - Filter Sand	20,23,22,16,56,17,54,18,19	1.5978
Region 16	Matl. 5 - Soil Cement Armoring	23,24,33,22	1.6
Region 17	Matl. 4 - Deeper Marine Deposits	57,48,49,58	1.02e+005
Region 18	Matl. 3 - Shallow Alluvial Deposits	35,39,38,37,30,29,28,27,26,81,84,64	5,297

Region 19	Matl. 2 - Surficial Overburden Layer	34,35,64,85,63	19.5
Region 20	Matl. 3 - Shallow Alluvial Deposits	65,57,48,47,66,74,67,68,73,69	26,978
Region 21	Matl. 2 - Surficial Overburden Layer	66,70,46,47	78.375
Region 22	Matl. 2 - Surficial Overburden Layer	71,65,69,72	1,233.4
Region 23	Matl. 9 Concrete Outfall Works	76,77,62,1	1
Region 24	Matl. 8 - Filter Sand	76,2,3,4,78,60,61,77	69
Region 25	Matl. 8 - Filter Sand	79,60,78,5,80	41
Region 26	Matl. 2 - Surficial Overburden Layer	80,5,12,21,26,81	167.7
Region 27	Matl. 9 Concrete Outfall Works	82,83,59,79,80,81,84,86	16
Region 28	Matl. 8 - Filter Sand	85,64,84,86	10.875
Region 29	Matl. 6 - Fine Drainage Gravel	63,85,86,82	10.875
Region 30	Matl. 6 - Fine Drainage Gravel	77,61,60,79	40
Region 31	Matl. 6 - Fine Drainage Gravel	62,77,79,59	1

Steady-State Seepage MSP (LT SSS) (2)

Report generated using GeoStudio 2012. Copyright © 1991-2013 GEO-SLOPE International Ltd.

File Information

Title: LOWP PIR Analysis Section B
Created By: Viessman, Michael W CIV USARMY CESAJ (US)
Last Edited By: Viessman, Michael W CIV USARMY CESAJ (US)
Revision Number: 559
File Version: 8.2
Tool Version: 8.12.3.7901
Date: 8/26/2018
Time: 5:01:58 PM
File Name: Section B EOC USP w toe drain.gsz
Directory: C:\Users\k3engmwv\Documents\LOWP\FY17-18 PIR Work\SEEP and SLOPEW Files\
Last Solved Date: 8/26/2018
Last Solved Time: 4:02:58 PM

Project Settings

Length(L) Units: feet
Time(t) Units: Seconds
Force(F) Units: lbf
Pressure(p) Units: psf
Mass(M) Units: lbs
Mass Flux Units: lbs/sec
Unit Weight of Water: 62.4 pcf
View: 2D
Element Thickness: 1

Analysis Settings

Steady-State Seepage MSP (LT SSS) (2)

Description: U/S MSP pool, toe drain, canal at wse 13ft
Kind: SEEP/W
Method: Steady-State
Settings
    Include Air Flow: No
Control
    Apply Runoff: Yes
Convergence
    Maximum Number of Iterations: 1,000
    Minimum Pressure Head Difference: 0.005
    Significant Digits: 2

Max # of Reviews: 10
Hydraulic Under-Relaxation Criteria
Under-Relaxation Initial Rate: 1
Under-Relaxation Min. Rate: 0.1
Under-Relaxation Reduction Rate: 0.65
Under-Relaxation Iterations: 10
Equation Solver: Parallel Direct
Time
Starting Time: 0 sec
Duration: 0 sec
Ending Time: 0 sec

Materials

Matl. 1 - Embankment Material

Model: Saturated / Unsaturated
Hydraulic
K-Function: Matl. 1 Embankment Material
Ky'/Kx' Ratio: 0.25
Rotation: 0 °
Vol. WC. Function: Matl. 1 Embankment Fill from Borrow Areas

Matl. 2 - Surficial Overburden Layer

Model: Saturated / Unsaturated
Hydraulic
K-Function: Matl. 2 Surficial Overburden Layer
Ky'/Kx' Ratio: 0.1
Rotation: 0 °
Vol. WC. Function: Matl. 2 Surficial Overburden Layer

Matl. 3 - Shallow Alluvial Deposits

Model: Saturated / Unsaturated
Hydraulic
K-Function: Matl. 3 Shallow Alluvial Deposits
Ky'/Kx' Ratio: 0.1
Rotation: 0 °
Vol. WC. Function: Matl. 3 Shallow Alluvial Deposits

Matl. 4 - Deeper Marine Deposits

Model: Saturated / Unsaturated
Hydraulic
K-Function: Matl. 4 Deeper Marine Deposits
Ky'/Kx' Ratio: 0.1
Rotation: 0 °
Vol. WC. Function: Matl. 4 Deeper Marine Deposits

Matl. 5 - Soil Cement Armoring

Model: Saturated / Unsaturated
Hydraulic
K-Function: Matl. 5 Soil Cement Armoring
Ky'/Kx' Ratio: 1
Rotation: 0 °
Vol. WC. Function: Matl. 5 Soil Cement Armoring

Matl. 6 - Fine Drainage Gravel

Model: Saturated / Unsaturated
Hydraulic
K-Function: Matl. 6 Fine Drainage Gravel
Ky'/Kx' Ratio: 1
Rotation: 0 °
Vol. WC. Function: Mat. 6 Fine Drainage Gravel (No 89)

Matl. 8 - Filter Sand

Model: Saturated / Unsaturated
Hydraulic
K-Function: Matl. 8 Filter Sand
Ky'/Kx' Ratio: 1
Rotation: 0 °
Vol. WC. Function: Matl. 8 Filter Sand (C33)

Matl. 9 Concrete Outfall Works

Model: Saturated Only
Hydraulic
K-Sat: 3.28e-010 ft/sec
Ky'/Kx' Ratio: 1
Rotation: 0 °
Volumetric Water Content: 0.3 ft^3/ft^3
Mv: 1e-008 /psf

Boundary Conditions

Drainage

Type: Total Flux (Q) 0
Review: Yes

Seepage Canal at Elev. 13ft

Type: Head (H) 13
Review: No

K-05 WAF Surcharge Pool at Elev. 29ft

Type: Head (H) 29
Review: No

Flux Sections

Flux Section 1

Coordinates

Coordinate: (-53.387097, 20.026507) ft
Coordinate: (-53.387097, 18.965214) ft

Flux Section 2

Coordinates

Coordinate: (-77.145669, 18.00689) ft
Coordinate: (-77.130906, 16.397638) ft
Coordinate: (-62.322835, 16.373031) ft
Coordinate: (-62.322835, 16.63878) ft

Flux Section 3

Coordinates

Coordinate: (0, 36.6) ft
Coordinate: (0, -112.3) ft

Flux Section 4

Coordinates

Coordinate: (-382.8, 18.2) ft
Coordinate: (-319.7, -3.4) ft
Coordinate: (-289.2, -3.3) ft
Coordinate: (-228.6, 17.7) ft

Flux Section 5

Coordinates

Coordinate: (-399.8, 18) ft
Coordinate: (-400.1, -112.4) ft

K Functions

Matl. 1 Embankment Material

Model: Hyd K Data Point Function
Function: X-Conductivity vs. Pore-Water Pressure
Curve Fit to Data: 100 %
Segment Curvature: 36 %
K-Saturation: 0.000131
Data Points: Matric Suction (psf), X-Conductivity (ft/sec)
Data Point: (0.01, 0.000131)
Data Point: (0.018329807, 0.00013099927)
Data Point: (0.033598183, 0.00013099852)
Data Point: (0.061584821, 0.00013099772)
Data Point: (0.11288379, 0.00013099684)
Data Point: (0.20691381, 0.00013099581)

Data Point: (0.37926902, 0.0001309945)
Data Point: (0.6951928, 0.00013099268)
Data Point: (1.274275, 0.00013098992)
Data Point: (2.3357215, 0.00013098549)
Data Point: (4.2813324, 0.0001309777)
Data Point: (7.8475997, 0.00013096339)
Data Point: (14.384499, 0.00013094955)
Data Point: (26.366509, 0.00013089452)
Data Point: (48.329302, 0.00013043835)
Data Point: (88.586679, 0.00012910123)
Data Point: (162.37767, 5.664247e-005)
Data Point: (297.63514, 2.5159921e-006)
Data Point: (545.55948, 4.7485927e-008)
Data Point: (1,000, 1.7886028e-009)

Estimation Properties

Hyd. K-Function Estimation Method: Fredlund-Xing Function
Volume Water Content Function: Matl. 1 Embankment Fill from Borrow Areas
Hydraulic K Sat: 0.000131 ft/sec
Residual Water Content: 0.0495 ft^3/ft^3
Maximum: 1,000
Minimum: 0.01
Num. Points: 20

Matl. 4 Deeper Marine Deposits

Model: Hyd K Data Point Function
Function: X-Conductivity vs. Pore-Water Pressure
Curve Fit to Data: 100 %
Segment Curvature: 44 %
K-Saturation: 0.000984
Data Points: Matric Suction (psf), X-Conductivity (ft/sec)
Data Point: (0.01, 0.000984)
Data Point: (0.018329807, 0.00098398585)
Data Point: (0.033598183, 0.00098397151)
Data Point: (0.061584821, 0.00098395679)
Data Point: (0.11288379, 0.00098394139)
Data Point: (0.20691381, 0.00098392476)
Data Point: (0.37926902, 0.00098390584)
Data Point: (0.6951928, 0.00098388274)
Data Point: (1.274275, 0.00098385199)
Data Point: (2.3357215, 0.0009838074)
Data Point: (4.2813324, 0.00098373618)
Data Point: (7.8475997, 0.00098361453)
Data Point: (14.384499, 0.0009834543)
Data Point: (26.366509, 0.00098304118)
Data Point: (48.329302, 0.00098089274)
Data Point: (88.586679, 0.00098804841)
Data Point: (162.37767, 0.00089693201)
Data Point: (297.63514, 0.00029836287)

Data Point: (545.55948, 5.5741791e-006)
Data Point: (1,000, 8.8545842e-008)
Estimation Properties
Hyd. K-Function Estimation Method: Fredlund-Xing Function
Volume Water Content Function: Matl. 4 Deeper Marine Deposits
Hydraulic K Sat: 0.000984 ft/sec
Residual Water Content: 0.03 ft^3/ft^3
Maximum: 1,000
Minimum: 0.01
Num. Points: 20

Matl. 6 Fine Drainage Gravel

Model: Hyd K Data Point Function
Function: X-Conductivity vs. Pore-Water Pressure
Curve Fit to Data: 100 %
Segment Curvature: 40 %
K-Saturation: 0.0116
Data Points: Matric Suction (psf), X-Conductivity (ft/sec)
Data Point: (0.01, 0.0116)
Data Point: (0.018329807, 0.011599999)
Data Point: (0.033598183, 0.011599999)
Data Point: (0.061584821, 0.011599997)
Data Point: (0.11288379, 0.011599992)
Data Point: (0.20691381, 0.011599991)
Data Point: (0.37926902, 0.011600028)
Data Point: (0.6951928, 0.011599657)
Data Point: (1.274275, 0.011599409)
Data Point: (2.3357215, 0.011606742)
Data Point: (4.2813324, 0.01023118)
Data Point: (7.8475997, 0.0019666911)
Data Point: (14.384499, 3.3083667e-005)
Data Point: (26.366509, 3.5079262e-007)
Data Point: (48.329302, 1.0209264e-008)
Data Point: (88.586679, 1.7809046e-009)
Data Point: (162.37767, 3.7872508e-010)
Data Point: (297.63514, 7.9282799e-011)
Data Point: (545.55948, 1.3312429e-011)
Data Point: (1,000, 1.2335483e-012)
Estimation Properties
Hyd. K-Function Estimation Method: Fredlund-Xing Function
Volume Water Content Function: Mat. 6 Fine Drainage Gravel (No 89)
Hydraulic K Sat: 0.0116 ft/sec
Residual Water Content: 0.042 ft^3/ft^3
Maximum: 1,000
Minimum: 0.01
Num. Points: 20

Matl. 2 Surficial Overburden Layer

Model: Hyd K Data Point Function
Function: X-Conductivity vs. Pore-Water Pressure
Curve Fit to Data: 100 %
Segment Curvature: 36 %
K-Saturation: 0.00026
Data Points: Matric Suction (psf), X-Conductivity (ft/sec)
Data Point: (0.01, 0.00026)
Data Point: (0.018329807, 0.00025999835)
Data Point: (0.033598183, 0.00025999664)
Data Point: (0.061584821, 0.00025999485)
Data Point: (0.11288379, 0.00025999288)
Data Point: (0.20691381, 0.00025999062)
Data Point: (0.37926902, 0.00025998779)
Data Point: (0.6951928, 0.00025998393)
Data Point: (1.274275, 0.00025997819)
Data Point: (2.3357215, 0.00025996907)
Data Point: (4.2813324, 0.00025995329)
Data Point: (7.8475997, 0.00025992467)
Data Point: (14.384499, 0.00025989276)
Data Point: (26.366509, 0.00025978642)
Data Point: (48.329302, 0.00025903344)
Data Point: (88.586679, 0.0002586222)
Data Point: (162.37767, 0.00013432217)
Data Point: (297.63514, 8.1547435e-006)
Data Point: (545.55948, 1.3663567e-007)
Data Point: (1,000, 4.5608744e-009)
Estimation Properties
Hyd. K-Function Estimation Method: Fredlund-Xing Function
Volume Water Content Function: Matl. 2 Surficial Overburden Layer
Hydraulic K Sat: 0.00026 ft/sec
Residual Water Content: 0.0495 ft^3/ft^3
Maximum: 1,000
Minimum: 0.01
Num. Points: 20

Matl. 3 Shallow Alluvial Deposits

Model: Hyd K Data Point Function
Function: X-Conductivity vs. Pore-Water Pressure
Curve Fit to Data: 100 %
Segment Curvature: 36 %
K-Saturation: 0.00174
Data Points: Matric Suction (psf), X-Conductivity (ft/sec)
Data Point: (0.01, 0.00174)
Data Point: (0.018329807, 0.0017399903)
Data Point: (0.033598183, 0.0017399803)
Data Point: (0.061584821, 0.0017399698)

Data Point: (0.11288379, 0.0017399581)
Data Point: (0.20691381, 0.0017399444)
Data Point: (0.37926902, 0.0017399269)
Data Point: (0.6951928, 0.0017399027)
Data Point: (1.274275, 0.0017398661)
Data Point: (2.3357215, 0.0017398072)
Data Point: (4.2813324, 0.0017397038)
Data Point: (7.8475997, 0.0017395137)
Data Point: (14.384499, 0.0017393299)
Data Point: (26.366509, 0.001738599)
Data Point: (48.329302, 0.0017325399)
Data Point: (88.586679, 0.0017147796)
Data Point: (162.37767, 0.00075235037)
Data Point: (297.63514, 3.3418521e-005)
Data Point: (545.55948, 6.307291e-007)
Data Point: (1,000, 2.3757014e-008)

Estimation Properties

Hyd. K-Function Estimation Method: Fredlund-Xing Function
Volume Water Content Function: Matl. 3 Shallow Alluvial Deposits
Hydraulic K Sat: 0.00174 ft/sec
Residual Water Content: 0.0495 ft^3/ft^3
Maximum: 1,000
Minimum: 0.01
Num. Points: 20

Matl. 5 Soil Cement Armoring

Model: Hyd K Data Point Function
Function: X-Conductivity vs. Pore-Water Pressure

Curve Fit to Data: 100 %
Segment Curvature: 44 %

K-Saturation: 1.31e-005
Data Points: Matric Suction (psf), X-Conductivity (ft/sec)

Data Point: (0.01, 1.31e-005)
Data Point: (0.018329807, 1.3099927e-005)
Data Point: (0.033598183, 1.3099852e-005)
Data Point: (0.061584821, 1.3099772e-005)
Data Point: (0.11288379, 1.3099684e-005)
Data Point: (0.20691381, 1.3099581e-005)
Data Point: (0.37926902, 1.309945e-005)
Data Point: (0.6951928, 1.3099268e-005)
Data Point: (1.274275, 1.3098992e-005)
Data Point: (2.3357215, 1.3098549e-005)
Data Point: (4.2813324, 1.309777e-005)
Data Point: (7.8475997, 1.3096339e-005)
Data Point: (14.384499, 1.3094955e-005)
Data Point: (26.366509, 1.3089452e-005)
Data Point: (48.329302, 1.3043835e-005)
Data Point: (88.586679, 1.2910123e-005)

Data Point: (162.37767, 5.664247e-006)
Data Point: (297.63514, 2.5159921e-007)
Data Point: (545.55948, 4.7485927e-009)
Data Point: (1,000, 1.7886028e-010)

Estimation Properties

Hyd. K-Function Estimation Method: Fredlund-Xing Function
Volume Water Content Function: Matl. 5 Soil Cement Armoring
Hydraulic K Sat: 1.31e-005 ft/sec
Residual Water Content: 0.03 ft^3/ft^3
Maximum: 1,000
Minimum: 0.01
Num. Points: 20

Matl. 8 Filter Sand

Model: Hyd K Data Point Function
Function: X-Conductivity vs. Pore-Water Pressure

Curve Fit to Data: 100 %
Segment Curvature: 44 %

K-Saturation: 0.000925
Data Points: Matric Suction (psf), X-Conductivity (ft/sec)

Data Point: (0.01, 0.000925)
Data Point: (0.018329807, 0.00092499993)
Data Point: (0.033598183, 0.00092499981)
Data Point: (0.061584821, 0.0009249996)
Data Point: (0.11288379, 0.00092499919)
Data Point: (0.20691381, 0.00092499854)
Data Point: (0.37926902, 0.00092499785)
Data Point: (0.6951928, 0.00092499117)
Data Point: (1.274275, 0.00092498427)
Data Point: (2.3357215, 0.00092515575)
Data Point: (4.2813324, 0.00092444336)
Data Point: (7.8475997, 0.00092025484)
Data Point: (14.384499, 0.00086768248)
Data Point: (26.366509, 0.00022215817)
Data Point: (48.329302, 5.6149022e-006)
Data Point: (88.586679, 9.4931606e-008)
Data Point: (162.37767, 4.4270536e-009)
Data Point: (297.63514, 6.3580973e-010)
Data Point: (545.55948, 1.1244323e-010)
Data Point: (1,000, 1.0762229e-011)

Estimation Properties

Hyd. K-Function Estimation Method: Fredlund-Xing Function
Volume Water Content Function: Matl. 8 Filter Sand (C33)
Hydraulic K Sat: 0.000925 ft/sec
Residual Water Content: 0.03 ft^3/ft^3
Maximum: 1,000
Minimum: 0.01
Num. Points: 20

Vol. Water Content Functions

Matl. 3 Shallow Alluvial Deposits

Model: Vol WC Data Point Function
Function: Vol. Water Content vs. Pore-Water Pressure
Mv: 2.5e-006 /psf
Saturated Water Content: 0.30020276 ft^3/ft^3
Residual Water Content: 0.030020276 ft^3/ft^3
Curve Fit to Data: 100 %
Segment Curvature: 40 %
Porosity: 0.30020276
Data Points: Matric Suction (psf), Vol. Water Content (ft^3/ft^3)
Data Point: (0.01, 0.29987196)
Data Point: (0.018329807, 0.29987196)
Data Point: (0.033598183, 0.29987196)
Data Point: (0.061584821, 0.29987196)
Data Point: (0.11288379, 0.29987196)
Data Point: (0.20691381, 0.29987196)
Data Point: (0.37926902, 0.29987196)
Data Point: (0.6951928, 0.29987196)
Data Point: (1.274275, 0.29987196)
Data Point: (2.3357215, 0.29987196)
Data Point: (4.2813324, 0.29987196)
Data Point: (7.8475997, 0.29987196)
Data Point: (14.384499, 0.29987196)
Data Point: (26.366509, 0.29987196)
Data Point: (48.329302, 0.29987196)
Data Point: (88.586679, 0.29667682)
Data Point: (162.37767, 0.20150036)
Data Point: (297.63514, 0.085811521)
Data Point: (545.55948, 0.049379583)
Data Point: (1,000, 0.039446735)
Estimation Properties
Vol. WC Estimation Method: Grain Size Function
Saturated Water Content: 0.3 ft^3/ft^3
Sample Material: Clay
Liquid Limit: 0 %
Diameter at 10% passing: 0.07000000000000001
Diameter at 60% passing: 0.2
Maximum: 1,000
Minimum: 0.01
Num. Points: 20

Matl. 1 Embankment Fill from Borrow Areas

Model: Vol WC Data Point Function
Function: Vol. Water Content vs. Pore-Water Pressure
Mv: 2.5e-006 /psf

Saturated Water Content: 0.30020276 ft^3/ft^3
Residual Water Content: 0.030020276 ft^3/ft^3
Curve Fit to Data: 100 %
Segment Curvature: 40 %
Porosity: 0.30020276
Data Points: Matric Suction (psf), Vol. Water Content (ft^3/ft^3)
Data Point: (0.01, 0.29987196)
Data Point: (0.018329807, 0.29987196)
Data Point: (0.033598183, 0.29987196)
Data Point: (0.061584821, 0.29987196)
Data Point: (0.11288379, 0.29987196)
Data Point: (0.20691381, 0.29987196)
Data Point: (0.37926902, 0.29987196)
Data Point: (0.6951928, 0.29987196)
Data Point: (1.274275, 0.29987196)
Data Point: (2.3357215, 0.29987196)
Data Point: (4.2813324, 0.29987196)
Data Point: (7.8475997, 0.29987196)
Data Point: (14.384499, 0.29987196)
Data Point: (26.366509, 0.29987196)
Data Point: (48.329302, 0.29987196)
Data Point: (88.586679, 0.29667682)
Data Point: (162.37767, 0.20150036)
Data Point: (297.63514, 0.085811521)
Data Point: (545.55948, 0.049379583)
Data Point: (1,000, 0.039446735)
Estimation Properties
Vol. WC Estimation Method: Grain Size Function
Saturated Water Content: 0.3 ft^3/ft^3
Sample Material: Clay
Liquid Limit: 0 %
Diameter at 10% passing: 0.07000000000000001
Diameter at 60% passing: 0.2
Maximum: 1,000
Minimum: 0.01
Num. Points: 20

Matl. 2 Surficial Overburden Layer

Model: Vol WC Data Point Function
Function: Vol. Water Content vs. Pore-Water Pressure
Mv: 2.5e-006 /psf
Saturated Water Content: 0.30132774 ft^3/ft^3
Residual Water Content: 0.030132774 ft^3/ft^3
Curve Fit to Data: 100 %
Segment Curvature: 40 %
Porosity: 0.30132774
Data Points: Matric Suction (psf), Vol. Water Content (ft^3/ft^3)
Data Point: (0.01, 0.30110223)

Data Point: (0.018329807, 0.30110223)
Data Point: (0.033598183, 0.30110223)
Data Point: (0.061584821, 0.30110223)
Data Point: (0.11288379, 0.30110223)
Data Point: (0.20691381, 0.30110223)
Data Point: (0.37926902, 0.30110223)
Data Point: (0.6951928, 0.30110223)
Data Point: (1.274275, 0.30110223)
Data Point: (2.3357215, 0.30110223)
Data Point: (4.2813324, 0.30110223)
Data Point: (7.8475997, 0.30110223)
Data Point: (14.384499, 0.30110223)
Data Point: (26.366509, 0.30110223)
Data Point: (48.329302, 0.30110223)
Data Point: (88.586679, 0.29938489)
Data Point: (162.37767, 0.21986255)
Data Point: (297.63514, 0.094851578)
Data Point: (545.55948, 0.051777012)
Data Point: (1,000, 0.040605935)

Estimation Properties
Vol. WC Estimation Method: Grain Size Function
Saturated Water Content: 0.3 ft^3/ft^3
Sample Material: Clay
Liquid Limit: 0 %
Diameter at 10% passing: 0.07000000000000001
Diameter at 60% passing: 0.18
Maximum: 1,000
Minimum: 0.01
Num. Points: 20

Matl. 8 Filter Sand (C33)

Model: Vol WC Data Point Function
Function: Vol. Water Content vs. Pore-Water Pressure
Mv: 8e-007 /psf
Saturated Water Content: 0.30081752 ft^3/ft^3
Residual Water Content: 0.030081752 ft^3/ft^3
Curve Fit to Data: 100 %
Segment Curvature: 48 %
Porosity: 0.30081752
Data Points: Matric Suction (psf), Vol. Water Content (ft^3/ft^3)
Data Point: (0.01, 0.30028388)
Data Point: (0.018329807, 0.30028388)
Data Point: (0.033598183, 0.30028388)
Data Point: (0.061584821, 0.30028388)
Data Point: (0.11288379, 0.30028388)
Data Point: (0.20691381, 0.30028388)
Data Point: (0.37926902, 0.30028388)
Data Point: (0.6951928, 0.30028388)

Data Point: (1.274275, 0.30028388)
Data Point: (2.3357215, 0.30028388)
Data Point: (4.2813324, 0.30028388)
Data Point: (7.8475997, 0.30028388)
Data Point: (14.384499, 0.28112842)
Data Point: (26.366509, 0.15065712)
Data Point: (48.329302, 0.048430554)
Data Point: (88.586679, 0.021674388)
Data Point: (162.37767, 0.016081301)
Data Point: (297.63514, 0.013674367)
Data Point: (545.55948, 0.011770874)
Data Point: (1,000, 0.010084825)

Estimation Properties

Vol. WC Estimation Method: Grain Size Function
Saturated Water Content: 0.3 ft^3/ft^3
Sample Material: Gravel
Liquid Limit: 0 %
Diameter at 10% passing: 0.38
Diameter at 60% passing: 1.6
Maximum: 1,000
Minimum: 0.01
Num. Points: 20

Mat. 6 Fine Drainage Gravel (No 89)

Model: Vol WC Data Point Function
Function: Vol. Water Content vs. Pore-Water Pressure

Mv: 4e-007 /psf
Saturated Water Content: 0.21947752 ft^3/ft^3
Residual Water Content: 0.021947752 ft^3/ft^3
Curve Fit to Data: 100 %
Segment Curvature: 48 %

Porosity: 0.21947752
Data Points: Matric Suction (psf), Vol. Water Content (ft^3/ft^3)

Data Point: (0.01, 0.21916427)
Data Point: (0.018329807, 0.21916427)
Data Point: (0.033598183, 0.21916427)
Data Point: (0.061584821, 0.21916427)
Data Point: (0.11288379, 0.21916427)
Data Point: (0.20691381, 0.21916427)
Data Point: (0.37926902, 0.21916427)
Data Point: (0.6951928, 0.21916427)
Data Point: (1.274275, 0.21916427)
Data Point: (2.3357215, 0.21916427)
Data Point: (4.2813324, 0.20182012)
Data Point: (7.8475997, 0.090949254)
Data Point: (14.384499, 0.021737158)
Data Point: (26.366509, 0.0080845337)
Data Point: (48.329302, 0.0057554944)

Data Point: (88.586679, 0.0048689464)
Data Point: (162.37767, 0.0041947283)
Data Point: (297.63514, 0.0036057207)
Data Point: (545.55948, 0.0030872724)
Data Point: (1,000, 0.002632805)
Estimation Properties
Vol. WC Estimation Method: Grain Size Function
Saturated Water Content: 0.21875 ft^3/ft^3
Sample Material: Clay
Liquid Limit: 0 %
Diameter at 10% passing: 3.5
Diameter at 60% passing: 7.1
Maximum: 1,000
Minimum: 0.01
Num. Points: 20

Matl. 4 Deeper Marine Deposits

Model: Vol WC Data Point Function
Function: Vol. Water Content vs. Pore-Water Pressure
Mv: 2.5e-006 /psf
Saturated Water Content: 0.30154597 ft^3/ft^3
Residual Water Content: 0.030154597 ft^3/ft^3
Curve Fit to Data: 100 %
Segment Curvature: 40 %
Porosity: 0.30154597
Data Points: Matric Suction (psf), Vol. Water Content (ft^3/ft^3)
Data Point: (0.01, 0.30100508)
Data Point: (0.018329807, 0.30100508)
Data Point: (0.033598183, 0.30100508)
Data Point: (0.061584821, 0.30100508)
Data Point: (0.11288379, 0.30100508)
Data Point: (0.20691381, 0.30100508)
Data Point: (0.37926902, 0.30100508)
Data Point: (0.6951928, 0.30100508)
Data Point: (1.274275, 0.30100508)
Data Point: (2.3357215, 0.30100508)
Data Point: (4.2813324, 0.30100508)
Data Point: (7.8475997, 0.30100508)
Data Point: (14.384499, 0.30100508)
Data Point: (26.366509, 0.30100508)
Data Point: (48.329302, 0.30100508)
Data Point: (88.586679, 0.30100508)
Data Point: (162.37767, 0.2887592)
Data Point: (297.63514, 0.17412515)
Data Point: (545.55948, 0.076942285)
Data Point: (1,000, 0.051397358)
Estimation Properties
Vol. WC Estimation Method: Grain Size Function

Saturated Water Content: 0.3 ft^3/ft^3
Sample Material: Clay
Liquid Limit: 0 %
Diameter at 10% passing: 0.06
Diameter at 60% passing: 0.11
Maximum: 1,000
Minimum: 0.01
Num. Points: 20

Matl. 5 Soil Cement Armoring

Model: Vol WC Data Point Function
Function: Vol. Water Content vs. Pore-Water Pressure
Mv: 2.5e-006 /psf
Saturated Water Content: 0.30020276 ft^3/ft^3
Residual Water Content: 0.030020276 ft^3/ft^3
Curve Fit to Data: 100 %
Segment Curvature: 40 %
Porosity: 0.30020276
Data Points: Matric Suction (psf), Vol. Water Content (ft^3/ft^3)
Data Point: (0.01, 0.29987196)
Data Point: (0.018329807, 0.29987196)
Data Point: (0.033598183, 0.29987196)
Data Point: (0.061584821, 0.29987196)
Data Point: (0.11288379, 0.29987196)
Data Point: (0.20691381, 0.29987196)
Data Point: (0.37926902, 0.29987196)
Data Point: (0.6951928, 0.29987196)
Data Point: (1.274275, 0.29987196)
Data Point: (2.3357215, 0.29987196)
Data Point: (4.2813324, 0.29987196)
Data Point: (7.8475997, 0.29987196)
Data Point: (14.384499, 0.29987196)
Data Point: (26.366509, 0.29987196)
Data Point: (48.329302, 0.29987196)
Data Point: (88.586679, 0.29667682)
Data Point: (162.37767, 0.20150036)
Data Point: (297.63514, 0.085811521)
Data Point: (545.55948, 0.049379583)
Data Point: (1,000, 0.039446735)
Estimation Properties
Vol. WC Estimation Method: Grain Size Function
Saturated Water Content: 0.3 ft^3/ft^3
Sample Material: Clay
Liquid Limit: 0 %
Diameter at 10% passing: 0.07000000000000001
Diameter at 60% passing: 0.2
Maximum: 1,000
Minimum: 0.01

Num. Points: 20

Points

	X (ft)	Y (ft)
Point 1	-53.5	21
Point 2	-14.5	21
Point 3	-14.5	30
Point 4	-11.5	30
Point 5	-11.5	18
Point 6	-7	36.5
Point 7	-7	35.5
Point 8	6.8	35.5
Point 9	14	33
Point 10	13.7	32.1
Point 11	48.6	20.5
Point 12	51.2	18
Point 13	52.0033	19.4828
Point 14	51.9	19.4
Point 15	51.8636	19.2065
Point 16	52.097	19.0075
Point 17	52.3031	19.0832
Point 18	52.3561	19.2916
Point 19	52.3	19.4
Point 20	52.1797	19.4906
Point 21	59.3	18
Point 22	56.3	19
Point 23	54.8	19.5
Point 24	58	19.5
Point 25	7	36.5
Point 26	59.3	16.5
Point 27	67.3	16.5
Point 28	67.3	14.5
Point 29	69.3	14.5
Point 30	69.3	16.5
Point 31	69.3	18

Point 32	62.5	18
Point 33	59.5	19
Point 34	-90	18
Point 35	-90	16.5
Point 36	100	18
Point 37	100	16.5
Point 38	100	-11.4
Point 39	-90	-11.4
Point 40	100	-111.5
Point 41	-90	-111.5
Point 42	-139	18
Point 43	-127	22
Point 44	-113	22
Point 45	-101	18
Point 46	-180	18
Point 47	-180	16.5
Point 48	-180	-11.5
Point 49	-180	-111.5
Point 50	1,100	18
Point 51	1,100	16.5
Point 52	1,100	-11.5
Point 53	1,100	-111.5
Point 54	52.3546	19.1839
Point 55	51.9487	19.066
Point 56	52.2227	19.0254
Point 57	-1,200	-11.5
Point 58	-1,200	-111.5
Point 59	-53.5	19
Point 60	-12.5	19
Point 61	-12.5	20
Point 62	-53.5	20
Point 63	-77	18
Point 64	-77	16.5
Point 65	-1,200	16.5
Point 66	-234.5	16.5
Point 67	-290	-2

Point 68	-320	-2
Point 69	-375.5	16.5
Point 70	-230	18
Point 71	-1,200	18
Point 72	-380	18
Point 73	-365	13
Point 74	-245	13
Point 75	41.5	25
Point 76	-52.5	21
Point 77	-52.5	20
Point 78	-11.5	19
Point 79	-52.5	19
Point 80	-52.5	18
Point 81	-52.5	16.5
Point 82	-62.5	18
Point 83	-53.5	18
Point 84	-62.5	16.5
Point 85	-77	17.25
Point 86	-62.5	17.25
Point 87	29.5	29

Lines

	Start Point	End Point	Hydraulic Boundary
Line 1	2	3	
Line 2	3	4	
Line 3	1	6	Drainage
Line 4	6	7	
Line 5	7	8	
Line 6	8	9	
Line 7	9	10	
Line 8	10	11	
Line 9	11	12	
Line 10	12	5	
Line 11	13	14	
Line 12	14	15	

Line 13	18	19	
Line 14	19	20	
Line 15	20	13	
Line 16	12	21	
Line 17	21	22	
Line 18	22	16	
Line 19	20	23	
Line 20	23	9	
Line 21	23	24	
Line 22	25	6	
Line 23	21	26	
Line 24	26	27	
Line 25	27	28	
Line 26	28	29	
Line 27	29	30	
Line 28	30	31	
Line 29	31	32	K-05 WAF Surcharge Pool at Elev. 29ft
Line 30	32	33	K-05 WAF Surcharge Pool at Elev. 29ft
Line 31	33	22	
Line 32	35	34	
Line 33	31	36	K-05 WAF Surcharge Pool at Elev. 29ft
Line 34	36	37	
Line 35	37	30	
Line 36	37	38	
Line 37	38	39	
Line 38	39	35	
Line 39	38	40	
Line 40	40	41	
Line 41	41	39	
Line 42	43	44	
Line 43	44	45	Drainage
Line 44	45	42	
Line 45	46	42	Drainage
Line 46	45	34	Drainage
Line 47	35	47	
Line 48	47	46	

Line 49	39	48	
Line 50	48	47	
Line 51	41	49	
Line 52	49	48	
Line 53	36	50	K-05 WAF Surcharge Pool at Elev. 29ft
Line 54	50	51	
Line 55	51	37	
Line 56	51	52	
Line 57	52	38	
Line 58	52	53	
Line 59	53	40	
Line 60	23	22	
Line 61	24	33	K-05 WAF Surcharge Pool at Elev. 29ft
Line 62	17	54	
Line 63	54	18	
Line 64	15	55	
Line 65	55	16	
Line 66	16	56	
Line 67	56	17	
Line 68	48	57	
Line 69	49	58	
Line 70	58	57	
Line 71	60	61	
Line 72	64	35	
Line 73	63	34	Drainage
Line 74	65	57	
Line 75	47	66	
Line 76	67	68	Seepage Canal at Elev. 13ft
Line 77	69	65	
Line 78	66	70	Drainage
Line 79	70	46	Drainage
Line 80	71	65	
Line 81	69	72	Drainage
Line 82	72	71	Drainage
Line 83	68	73	Seepage Canal at Elev. 13ft
Line 84	73	69	Drainage

Line 85	66	74	Drainage
Line 86	74	67	Seepage Canal at Elev. 13ft
Line 87	24	75	K-05 WAF Surcharge Pool at Elev. 29ft
Line 88	1	76	
Line 89	76	2	
Line 90	61	77	
Line 91	77	62	
Line 92	76	77	
Line 93	62	1	
Line 94	4	78	
Line 95	78	5	
Line 96	78	60	
Line 97	59	79	
Line 98	79	60	
Line 99	5	80	
Line 100	80	79	
Line 101	26	81	
Line 102	81	80	
Line 103	81	84	
Line 104	84	64	
Line 105	82	83	
Line 106	83	59	
Line 107	64	85	
Line 108	85	63	
Line 109	84	86	
Line 110	86	82	
Line 111	86	85	
Line 112	82	63	Drainage
Line 113	79	77	
Line 114	59	62	Drainage
Line 115	42	43	
Line 116	75	87	K-05 WAF Surcharge Pool at Elev. 29ft
Line 117	87	25	

Regions

	Material	Points	Area (ft²)
Region 1	Matl. 1 - Embankment Material	1,6,7,8,9,10,11,12,5,78,4,3,2,76	993.93
Region 2		13,14,15,55,16,56,17,54,18,19,20	0.18474
Region 3	Matl. 8 - Filter Sand	9,10,11,12,21,22,16,55,15,14,13,20,23	49.637
Region 4	Matl. 5 - Soil Cement Armoring	6,7,8,9,23,24,75,87,25	69.1
Region 5	Matl. 5 - Soil Cement Armoring	22,21,26,27,28,29,30,31,32,33	22.2
Region 6	Matl. 2 - Surficial Overburden Layer	31,36,37,30	46.05
Region 7	Matl. 4 - Deeper Marine Deposits	39,38,40,41	19,019
Region 8	Matl. 1 - Embankment Material	42,43,44,45	104
Region 9	Matl. 2 - Surficial Overburden Layer	46,42,45,34,35,47	135
Region 10	Matl. 3 - Shallow Alluvial Deposits	47,35,39,48	2,515.5
Region 11	Matl. 4 - Deeper Marine Deposits	48,39,41,49	9,004.5
Region 12	Matl. 2 - Surficial Overburden Layer	36,50,51,37	1,500
Region 13	Matl. 3 - Shallow Alluvial Deposits	37,51,52,38	27,950
Region 14	Matl. 4 - Deeper Marine Deposits	38,52,53,40	1.0005e+005
Region 15	Matl. 8 - Filter Sand	20,23,22,16,56,17,54,18,19	1.5978
Region 16	Matl. 5 - Soil Cement Armoring	23,24,33,22	1.6
Region 17	Matl. 4 - Deeper Marine Deposits	57,48,49,58	1.02e+005
Region 18	Matl. 3 - Shallow Alluvial Deposits	35,39,38,37,30,29,28,27,26,81,84,64	5,297

Region 19	Matl. 2 - Surficial Overburden Layer	34,35,64,85,63	19.5
Region 20	Matl. 3 - Shallow Alluvial Deposits	65,57,48,47,66,74,67,68,73,69	26,978
Region 21	Matl. 2 - Surficial Overburden Layer	66,70,46,47	78.375
Region 22	Matl. 2 - Surficial Overburden Layer	71,65,69,72	1,233.4
Region 23	Matl. 9 Concrete Outfall Works	76,77,62,1	1
Region 24	Matl. 8 - Filter Sand	76,2,3,4,78,60,61,77	69
Region 25	Matl. 8 - Filter Sand	79,60,78,5,80	41
Region 26	Matl. 2 - Surficial Overburden Layer	80,5,12,21,26,81	167.7
Region 27	Matl. 9 Concrete Outfall Works	82,83,59,79,80,81,84,86	16
Region 28	Matl. 8 - Filter Sand	85,64,84,86	10.875
Region 29	Matl. 6 - Fine Drainage Gravel	63,85,86,82	10.875
Region 30	Matl. 6 - Fine Drainage Gravel	77,61,60,79	40
Region 31	Matl. 6 - Fine Drainage Gravel	62,77,79,59	1

Steady-State Seepage (EOC)

Report generated using GeoStudio 2012. Copyright © 1991-2013 GEO-SLOPE International Ltd.

File Information

Title: LOWP PIR Analysis Section H
Created By: Viessman, Michael W CIV USARMY CESAJ (US)
Last Edited By: Viessman, Michael W CIV USARMY CESAJ (US)
Revision Number: 529
File Version: 8.2
Tool Version: 8.12.3.7901
Date: 8/21/2018
Time: 11:51:35 AM
File Name: Section H EOC USP-DSP no toe drain.gsz
Directory: C:\Users\k3engmwv\Documents\LOWP\FY17-18 PIR Work\SEEP and SLOPEW Files\
Last Solved Date: 8/21/2018
Last Solved Time: 10:52:12 AM

Project Settings

Length(L) Units: feet
Time(t) Units: Seconds
Force(F) Units: lbf
Pressure(p) Units: psf
Mass(M) Units: lbs
Mass Flux Units: lbs/sec
Unit Weight of Water: 62.4 pcf
View: 2D
Element Thickness: 1

Analysis Settings

Steady-State Seepage (EOC)

Description: U/S pool w no toe drain
Kind: SEEP/W
Method: Steady-State
Settings
    Include Air Flow: No
Control
    Apply Runoff: Yes
Convergence
    Maximum Number of Iterations: 1,000
    Minimum Pressure Head Difference: 0.005
    Significant Digits: 2

Max # of Reviews: 10
Hydraulic Under-Relaxation Criteria
Under-Relaxation Initial Rate: 1
Under-Relaxation Min. Rate: 0.1
Under-Relaxation Reduction Rate: 0.65
Under-Relaxation Iterations: 10
Equation Solver: Parallel Direct
Time
Starting Time: 0 sec
Duration: 0 sec
Ending Time: 0 sec

Materials

Matl. 1 - Embankment Material

Model: Saturated / Unsaturated
Hydraulic
K-Function: Matl. 1 Embankment Material
Ky'/Kx' Ratio: 0.25
Rotation: 0 °
Vol. WC. Function: Matl. 1 Embankment Fill from Borrow Areas

Matl. 2 - Surficial Overburden Layer

Model: Saturated / Unsaturated
Hydraulic
K-Function: Matl. 2 Surficial Overburden Layer
Ky'/Kx' Ratio: 0.1
Rotation: 0 °
Vol. WC. Function: Matl. 2 Surficial Overburden Layer

Matl. 3 - Shallow Alluvial Deposits

Model: Saturated / Unsaturated
Hydraulic
K-Function: Matl. 3 Shallow Alluvial Deposits
Ky'/Kx' Ratio: 0.1
Rotation: 0 °
Vol. WC. Function: Matl. 3 Shallow Alluvial Deposits

Matl. 4 - Deeper Marine Deposits

Model: Saturated / Unsaturated
Hydraulic
K-Function: Matl. 4 Deeper Marine Deposits
Ky'/Kx' Ratio: 0.1
Rotation: 0 °
Vol. WC. Function: Matl. 4 Deeper Marine Deposits

Matl. 5 - Soil Cement Armoring

Model: Saturated / Unsaturated
Hydraulic
K-Function: Matl. 5 Soil Cement Armoring
Ky'/Kx' Ratio: 1
Rotation: 0 °
Vol. WC. Function: Matl. 5 Soil Cement Armoring

Matl. 6 - Fine Drainage Gravel

Model: Saturated / Unsaturated
Hydraulic
K-Function: Matl. 6 Fine Drainage Gravel
Ky'/Kx' Ratio: 1
Rotation: 0 °
Vol. WC. Function: Mat. 6 Fine Drainage Gravel (No 89)

Matl. 8 - Filter Sand

Model: Saturated / Unsaturated
Hydraulic
K-Function: Matl. 8 Filter Sand
Ky'/Kx' Ratio: 1
Rotation: 0 °
Vol. WC. Function: Matl. 8 Filter Sand (C33)

Matl. 9 Concrete Outfall Works

Model: Saturated Only
Hydraulic
K-Sat: 3.28e-010 ft/sec
Ky'/Kx' Ratio: 1
Rotation: 0 °
Volumetric Water Content: 0.3 ft^3/ft^3
Mv: 1e-008 /psf

Boundary Conditions

K-05 WAF Normal Pool at Elev. 23ft

Type: Head (H) 23
Review: No

PR at Elev. 18ft

Type: Head (H) 18
Review: No

Drainage

Type: Total Flux (Q) 0
Review: Yes

Flux Sections

Flux Section 1

Coordinates

Coordinate: (-56.368089, 17.11908) ft
Coordinate: (-56.359991, 15.897243) ft

Flux Section 2

Coordinates

Coordinate: (-102.27362, 18.818898) ft
Coordinate: (-88.017717, 14.05315) ft
Coordinate: (-67.383858, 14.059055) ft
Coordinate: (-65.3, 14.1) ft

Flux Section 3

Coordinates

Coordinate: (-11.352061, 28.166901) ft
Coordinate: (-11.307284, 14.896151) ft

Flux Section 4

Coordinates

Coordinate: (-11.307284, 14.851374) ft
Coordinate: (-55.502072, 14.873763) ft

Flux Section 5

Coordinates

Coordinate: (-0.349869, 33.216015) ft
Coordinate: (-0.361475, -114.73943) ft

Flux Section 6

Coordinates

Coordinate: (-109.10947, 18.913159) ft
Coordinate: (-109.07273, -114.73608) ft

K Functions

Matl. 1 Embankment Material

Model: Hyd K Data Point Function
Function: X-Conductivity vs. Pore-Water Pressure
Curve Fit to Data: 100 %
Segment Curvature: 36 %
K-Saturation: 0.000131
Data Points: Matric Suction (psf), X-Conductivity (ft/sec)
Data Point: (0.01, 0.000131)
Data Point: (0.018329807, 0.00013099927)
Data Point: (0.033598183, 0.00013099852)

Data Point: (0.061584821, 0.00013099772)
Data Point: (0.11288379, 0.00013099684)
Data Point: (0.20691381, 0.00013099581)
Data Point: (0.37926902, 0.0001309945)
Data Point: (0.6951928, 0.00013099268)
Data Point: (1.274275, 0.00013098992)
Data Point: (2.3357215, 0.00013098549)
Data Point: (4.2813324, 0.0001309777)
Data Point: (7.8475997, 0.00013096339)
Data Point: (14.384499, 0.00013094955)
Data Point: (26.366509, 0.00013089452)
Data Point: (48.329302, 0.00013043835)
Data Point: (88.586679, 0.00012910123)
Data Point: (162.37767, 5.664247e-005)
Data Point: (297.63514, 2.5159921e-006)
Data Point: (545.55948, 4.7485927e-008)
Data Point: (1,000, 1.7886028e-009)

Estimation Properties

Hyd. K-Function Estimation Method: Fredlund-Xing Function
Volume Water Content Function: Matl. 1 Embankment Fill from Borrow Areas
Hydraulic K Sat: 0.000131 ft/sec
Residual Water Content: 0.0495 ft^3/ft^3
Maximum: 1,000
Minimum: 0.01
Num. Points: 20

Matl. 4 Deeper Marine Deposits

Model: Hyd K Data Point Function
Function: X-Conductivity vs. Pore-Water Pressure
Curve Fit to Data: 100 %
Segment Curvature: 44 %
K-Saturation: 0.000984
Data Points: Matric Suction (psf), X-Conductivity (ft/sec)
Data Point: (0.01, 0.000984)
Data Point: (0.018329807, 0.00098398585)
Data Point: (0.033598183, 0.00098397151)
Data Point: (0.061584821, 0.00098395679)
Data Point: (0.11288379, 0.00098394139)
Data Point: (0.20691381, 0.00098392476)
Data Point: (0.37926902, 0.00098390584)
Data Point: (0.6951928, 0.00098388274)
Data Point: (1.274275, 0.00098385199)
Data Point: (2.3357215, 0.0009838074)
Data Point: (4.2813324, 0.00098373618)
Data Point: (7.8475997, 0.00098361453)
Data Point: (14.384499, 0.0009834543)
Data Point: (26.366509, 0.00098304118)
Data Point: (48.329302, 0.00098089274)

Data Point: (88.586679, 0.00098804841)
Data Point: (162.37767, 0.00089693201)
Data Point: (297.63514, 0.00029836287)
Data Point: (545.55948, 5.5741791e-006)
Data Point: (1,000, 8.8545842e-008)
Estimation Properties
Hyd. K-Function Estimation Method: Fredlund-Xing Function
Volume Water Content Function: Matl. 4 Deeper Marine Deposits
Hydraulic K Sat: 0.000984 ft/sec
Residual Water Content: 0.03 ft^3/ft^3
Maximum: 1,000
Minimum: 0.01
Num. Points: 20

Matl. 6 Fine Drainage Gravel

Model: Hyd K Data Point Function
Function: X-Conductivity vs. Pore-Water Pressure
Curve Fit to Data: 100 %
Segment Curvature: 40 %
K-Saturation: 0.02315
Data Points: Matric Suction (psf), X-Conductivity (ft/sec)
Data Point: (0.01, 0.02315)
Data Point: (0.018329807, 0.023149999)
Data Point: (0.033598183, 0.023149997)
Data Point: (0.061584821, 0.023149994)
Data Point: (0.11288379, 0.023149984)
Data Point: (0.20691381, 0.023149981)
Data Point: (0.37926902, 0.023150055)
Data Point: (0.6951928, 0.023149315)
Data Point: (1.274275, 0.02314882)
Data Point: (2.3357215, 0.023163455)
Data Point: (4.2813324, 0.02041826)
Data Point: (7.8475997, 0.0039249052)
Data Point: (14.384499, 6.6024733e-005)
Data Point: (26.366509, 7.000732e-007)
Data Point: (48.329302, 2.0374523e-008)
Data Point: (88.586679, 3.5541328e-009)
Data Point: (162.37767, 7.5581773e-010)
Data Point: (297.63514, 1.5822386e-010)
Data Point: (545.55948, 2.6567478e-011)
Data Point: (1,000, 2.4617797e-012)
Estimation Properties
Hyd. K-Function Estimation Method: Fredlund-Xing Function
Volume Water Content Function: Mat. 6 Fine Drainage Gravel (No 89)
Hydraulic K Sat: 0.02315 ft/sec
Residual Water Content: 0.042 ft^3/ft^3
Maximum: 1,000
Minimum: 0.01

Num. Points: 20

Matl. 2 Surficial Overburden Layer

Model: Hyd K Data Point Function
Function: X-Conductivity vs. Pore-Water Pressure
Curve Fit to Data: 100 %
Segment Curvature: 36 %
K-Saturation: 0.00026
Data Points: Matric Suction (psf), X-Conductivity (ft/sec)
Data Point: (0.01, 0.00026)
Data Point: (0.018329807, 0.00025999835)
Data Point: (0.033598183, 0.00025999664)
Data Point: (0.061584821, 0.00025999485)
Data Point: (0.11288379, 0.00025999288)
Data Point: (0.20691381, 0.00025999062)
Data Point: (0.37926902, 0.00025998779)
Data Point: (0.6951928, 0.00025998393)
Data Point: (1.274275, 0.00025997819)
Data Point: (2.3357215, 0.00025996907)
Data Point: (4.2813324, 0.00025995329)
Data Point: (7.8475997, 0.00025992467)
Data Point: (14.384499, 0.00025989276)
Data Point: (26.366509, 0.00025978642)
Data Point: (48.329302, 0.00025903344)
Data Point: (88.586679, 0.0002586222)
Data Point: (162.37767, 0.00013432217)
Data Point: (297.63514, 8.1547435e-006)
Data Point: (545.55948, 1.3663567e-007)
Data Point: (1,000, 4.5608744e-009)
Estimation Properties
Hyd. K-Function Estimation Method: Fredlund-Xing Function
Volume Water Content Function: Matl. 2 Surficial Overburden Layer
Hydraulic K Sat: 0.00026 ft/sec
Residual Water Content: 0.0495 ft^3/ft^3
Maximum: 1,000
Minimum: 0.01
Num. Points: 20

Matl. 3 Shallow Alluvial Deposits

Model: Hyd K Data Point Function
Function: X-Conductivity vs. Pore-Water Pressure
Curve Fit to Data: 100 %
Segment Curvature: 36 %
K-Saturation: 0.00174
Data Points: Matric Suction (psf), X-Conductivity (ft/sec)
Data Point: (0.01, 0.00174)
Data Point: (0.018329807, 0.0017399903)
Data Point: (0.033598183, 0.0017399803)

Data Point: (0.061584821, 0.0017399698)
Data Point: (0.11288379, 0.0017399581)
Data Point: (0.20691381, 0.0017399444)
Data Point: (0.37926902, 0.0017399269)
Data Point: (0.6951928, 0.0017399027)
Data Point: (1.274275, 0.0017398661)
Data Point: (2.3357215, 0.0017398072)
Data Point: (4.2813324, 0.0017397038)
Data Point: (7.8475997, 0.0017395137)
Data Point: (14.384499, 0.0017393299)
Data Point: (26.366509, 0.001738599)
Data Point: (48.329302, 0.0017325399)
Data Point: (88.586679, 0.0017147796)
Data Point: (162.37767, 0.00075235037)
Data Point: (297.63514, 3.3418521e-005)
Data Point: (545.55948, 6.307291e-007)
Data Point: (1,000, 2.3757014e-008)

Estimation Properties
Hyd. K-Function Estimation Method: Fredlund-Xing Function
Volume Water Content Function: Matl. 3 Shallow Alluvial Deposits
Hydraulic K Sat: 0.00174 ft/sec
Residual Water Content: 0.0495 ft^3/ft^3
Maximum: 1,000
Minimum: 0.01
Num. Points: 20

Matl. 5 Soil Cement Armoring

Model: Hyd K Data Point Function
Function: X-Conductivity vs. Pore-Water Pressure
Curve Fit to Data: 100 %
Segment Curvature: 44 %
K-Saturation: 1.31e-005
Data Points: Matric Suction (psf), X-Conductivity (ft/sec)
Data Point: (0.01, 1.31e-005)
Data Point: (0.018329807, 1.3099927e-005)
Data Point: (0.033598183, 1.3099852e-005)
Data Point: (0.061584821, 1.3099772e-005)
Data Point: (0.11288379, 1.3099684e-005)
Data Point: (0.20691381, 1.3099581e-005)
Data Point: (0.37926902, 1.309945e-005)
Data Point: (0.6951928, 1.3099268e-005)
Data Point: (1.274275, 1.3098992e-005)
Data Point: (2.3357215, 1.3098549e-005)
Data Point: (4.2813324, 1.309777e-005)
Data Point: (7.8475997, 1.3096339e-005)
Data Point: (14.384499, 1.3094955e-005)
Data Point: (26.366509, 1.3089452e-005)
Data Point: (48.329302, 1.3043835e-005)

Data Point: (88.586679, 1.2910123e-005)
Data Point: (162.37767, 5.664247e-006)
Data Point: (297.63514, 2.5159921e-007)
Data Point: (545.55948, 4.7485927e-009)
Data Point: (1,000, 1.7886028e-010)
Estimation Properties
Hyd. K-Function Estimation Method: Fredlund-Xing Function
Volume Water Content Function: Matl. 5 Soil Cement Armoring
Hydraulic K Sat: 1.31e-005 ft/sec
Residual Water Content: 0.03 ft^3/ft^3
Maximum: 1,000
Minimum: 0.01
Num. Points: 20

Matl. 8 Filter Sand

Model: Hyd K Data Point Function
Function: X-Conductivity vs. Pore-Water Pressure
Curve Fit to Data: 100 %
Segment Curvature: 44 %
K-Saturation: 0.000925
Data Points: Matric Suction (psf), X-Conductivity (ft/sec)
Data Point: (0.01, 0.000925)
Data Point: (0.018329807, 0.00092499993)
Data Point: (0.033598183, 0.00092499981)
Data Point: (0.061584821, 0.0009249996)
Data Point: (0.11288379, 0.00092499919)
Data Point: (0.20691381, 0.00092499854)
Data Point: (0.37926902, 0.00092499785)
Data Point: (0.6951928, 0.00092499117)
Data Point: (1.274275, 0.00092498427)
Data Point: (2.3357215, 0.00092515575)
Data Point: (4.2813324, 0.00092444336)
Data Point: (7.8475997, 0.00092025484)
Data Point: (14.384499, 0.00086768248)
Data Point: (26.366509, 0.00022215817)
Data Point: (48.329302, 5.6149022e-006)
Data Point: (88.586679, 9.4931606e-008)
Data Point: (162.37767, 4.4270536e-009)
Data Point: (297.63514, 6.3580973e-010)
Data Point: (545.55948, 1.1244323e-010)
Data Point: (1,000, 1.0762229e-011)
Estimation Properties
Hyd. K-Function Estimation Method: Fredlund-Xing Function
Volume Water Content Function: Matl. 8 Filter Sand (C33)
Hydraulic K Sat: 0.000925 ft/sec
Residual Water Content: 0.03 ft^3/ft^3
Maximum: 1,000
Minimum: 0.01

Num. Points: 20

Vol. Water Content Functions

Matl. 3 Shallow Alluvial Deposits

Model: Vol WC Data Point Function
Function: Vol. Water Content vs. Pore-Water Pressure
Mv: 2.5e-006 /psf
Saturated Water Content: 0.30020276 ft^3/ft^3
Residual Water Content: 0.030020276 ft^3/ft^3
Curve Fit to Data: 100 %
Segment Curvature: 40 %
Porosity: 0.30020276
Data Points: Matric Suction (psf), Vol. Water Content (ft^3/ft^3)
Data Point: (0.01, 0.29987196)
Data Point: (0.018329807, 0.29987196)
Data Point: (0.033598183, 0.29987196)
Data Point: (0.061584821, 0.29987196)
Data Point: (0.11288379, 0.29987196)
Data Point: (0.20691381, 0.29987196)
Data Point: (0.37926902, 0.29987196)
Data Point: (0.6951928, 0.29987196)
Data Point: (1.274275, 0.29987196)
Data Point: (2.3357215, 0.29987196)
Data Point: (4.2813324, 0.29987196)
Data Point: (7.8475997, 0.29987196)
Data Point: (14.384499, 0.29987196)
Data Point: (26.366509, 0.29987196)
Data Point: (48.329302, 0.29987196)
Data Point: (88.586679, 0.29667682)
Data Point: (162.37767, 0.20150036)
Data Point: (297.63514, 0.085811521)
Data Point: (545.55948, 0.049379583)
Data Point: (1,000, 0.039446735)
Estimation Properties
Vol. WC Estimation Method: Grain Size Function
Saturated Water Content: 0.3 ft^3/ft^3
Sample Material: Clay
Liquid Limit: 0 %
Diameter at 10% passing: 0.07000000000000001
Diameter at 60% passing: 0.2
Maximum: 1,000
Minimum: 0.01
Num. Points: 20

Matl. 1 Embankment Fill from Borrow Areas

Model: Vol WC Data Point Function
Function: Vol. Water Content vs. Pore-Water Pressure
Mv: 2.5e-006 /psf
Saturated Water Content: 0.30020276 ft^3/ft^3
Residual Water Content: 0.030020276 ft^3/ft^3
Curve Fit to Data: 100 %
Segment Curvature: 40 %
Porosity: 0.30020276
Data Points: Matric Suction (psf), Vol. Water Content (ft^3/ft^3)
Data Point: (0.01, 0.29987196)
Data Point: (0.018329807, 0.29987196)
Data Point: (0.033598183, 0.29987196)
Data Point: (0.061584821, 0.29987196)
Data Point: (0.11288379, 0.29987196)
Data Point: (0.20691381, 0.29987196)
Data Point: (0.37926902, 0.29987196)
Data Point: (0.6951928, 0.29987196)
Data Point: (1.274275, 0.29987196)
Data Point: (2.3357215, 0.29987196)
Data Point: (4.2813324, 0.29987196)
Data Point: (7.8475997, 0.29987196)
Data Point: (14.384499, 0.29987196)
Data Point: (26.366509, 0.29987196)
Data Point: (48.329302, 0.29987196)
Data Point: (88.586679, 0.29667682)
Data Point: (162.37767, 0.20150036)
Data Point: (297.63514, 0.085811521)
Data Point: (545.55948, 0.049379583)
Data Point: (1,000, 0.039446735)
Estimation Properties
Vol. WC Estimation Method: Grain Size Function
Saturated Water Content: 0.3 ft^3/ft^3
Sample Material: Clay
Liquid Limit: 0 %
Diameter at 10% passing: 0.07000000000000001
Diameter at 60% passing: 0.2
Maximum: 1,000
Minimum: 0.01
Num. Points: 20

Matl. 2 Surficial Overburden Layer

Model: Vol WC Data Point Function
Function: Vol. Water Content vs. Pore-Water Pressure
Mv: 2.5e-006 /psf
Saturated Water Content: 0.30132774 ft^3/ft^3
Residual Water Content: 0.030132774 ft^3/ft^3

Curve Fit to Data: 100 %
Segment Curvature: 40 %
Porosity: 0.30132774
Data Points: Matric Suction (psf), Vol. Water Content (ft^3/ft^3)
Data Point: (0.01, 0.30110223)
Data Point: (0.018329807, 0.30110223)
Data Point: (0.033598183, 0.30110223)
Data Point: (0.061584821, 0.30110223)
Data Point: (0.11288379, 0.30110223)
Data Point: (0.20691381, 0.30110223)
Data Point: (0.37926902, 0.30110223)
Data Point: (0.6951928, 0.30110223)
Data Point: (1.274275, 0.30110223)
Data Point: (2.3357215, 0.30110223)
Data Point: (4.2813324, 0.30110223)
Data Point: (7.8475997, 0.30110223)
Data Point: (14.384499, 0.30110223)
Data Point: (26.366509, 0.30110223)
Data Point: (48.329302, 0.30110223)
Data Point: (88.586679, 0.29938489)
Data Point: (162.37767, 0.21986255)
Data Point: (297.63514, 0.094851578)
Data Point: (545.55948, 0.051777012)
Data Point: (1,000, 0.040605935)
Estimation Properties
Vol. WC Estimation Method: Grain Size Function
Saturated Water Content: 0.3 ft^3/ft^3
Sample Material: Clay
Liquid Limit: 0 %
Diameter at 10% passing: 0.07000000000000001
Diameter at 60% passing: 0.18
Maximum: 1,000
Minimum: 0.01
Num. Points: 20

Matl. 8 Filter Sand (C33)

Model: Vol WC Data Point Function
Function: Vol. Water Content vs. Pore-Water Pressure
Mv: 8e-007 /psf
Saturated Water Content: 0.30081752 ft^3/ft^3
Residual Water Content: 0.030081752 ft^3/ft^3
Curve Fit to Data: 100 %
Segment Curvature: 48 %
Porosity: 0.30081752
Data Points: Matric Suction (psf), Vol. Water Content (ft^3/ft^3)
Data Point: (0.01, 0.30028388)
Data Point: (0.018329807, 0.30028388)
Data Point: (0.033598183, 0.30028388)

Data Point: (0.061584821, 0.30028388)
Data Point: (0.11288379, 0.30028388)
Data Point: (0.20691381, 0.30028388)
Data Point: (0.37926902, 0.30028388)
Data Point: (0.6951928, 0.30028388)
Data Point: (1.274275, 0.30028388)
Data Point: (2.3357215, 0.30028388)
Data Point: (4.2813324, 0.30028388)
Data Point: (7.8475997, 0.30028388)
Data Point: (14.384499, 0.28112842)
Data Point: (26.366509, 0.15065712)
Data Point: (48.329302, 0.048430554)
Data Point: (88.586679, 0.021674388)
Data Point: (162.37767, 0.016081301)
Data Point: (297.63514, 0.013674367)
Data Point: (545.55948, 0.011770874)
Data Point: (1,000, 0.010084825)

Estimation Properties
Vol. WC Estimation Method: Grain Size Function
Saturated Water Content: 0.3 ft^3/ft^3
Sample Material: Gravel
Liquid Limit: 0 %
Diameter at 10% passing: 0.38
Diameter at 60% passing: 1.6
Maximum: 1,000
Minimum: 0.01
Num. Points: 20

Mat. 6 Fine Drainage Gravel (No 89)

Model: Vol WC Data Point Function
Function: Vol. Water Content vs. Pore-Water Pressure
Mv: 4e-007 /psf
Saturated Water Content: 0.21947752 ft^3/ft^3
Residual Water Content: 0.021947752 ft^3/ft^3
Curve Fit to Data: 100 %
Segment Curvature: 48 %
Porosity: 0.21947752
Data Points: Matric Suction (psf), Vol. Water Content (ft^3/ft^3)
Data Point: (0.01, 0.21916427)
Data Point: (0.018329807, 0.21916427)
Data Point: (0.033598183, 0.21916427)
Data Point: (0.061584821, 0.21916427)
Data Point: (0.11288379, 0.21916427)
Data Point: (0.20691381, 0.21916427)
Data Point: (0.37926902, 0.21916427)
Data Point: (0.6951928, 0.21916427)
Data Point: (1.274275, 0.21916427)
Data Point: (2.3357215, 0.21916427)

Data Point: (4.2813324, 0.20182012)
Data Point: (7.8475997, 0.090949254)
Data Point: (14.384499, 0.021737158)
Data Point: (26.366509, 0.0080845337)
Data Point: (48.329302, 0.0057554944)
Data Point: (88.586679, 0.0048689464)
Data Point: (162.37767, 0.0041947283)
Data Point: (297.63514, 0.0036057207)
Data Point: (545.55948, 0.0030872724)
Data Point: (1,000, 0.002632805)

Estimation Properties

Vol. WC Estimation Method: Grain Size Function
Saturated Water Content: 0.21875 ft^3/ft^3
Sample Material: Clay
Liquid Limit: 0 %
Diameter at 10% passing: 3.5
Diameter at 60% passing: 7.1
Maximum: 1,000
Minimum: 0.01
Num. Points: 20

Matl. 4 Deeper Marine Deposits

Model: Vol WC Data Point Function
Function: Vol. Water Content vs. Pore-Water Pressure

Mv: 2.5e-006 /psf
Saturated Water Content: 0.30154597 ft^3/ft^3
Residual Water Content: 0.030154597 ft^3/ft^3
Curve Fit to Data: 100 %
Segment Curvature: 40 %

Porosity: 0.30154597
Data Points: Matric Suction (psf), Vol. Water Content (ft^3/ft^3)

Data Point: (0.01, 0.30100508)
Data Point: (0.018329807, 0.30100508)
Data Point: (0.033598183, 0.30100508)
Data Point: (0.061584821, 0.30100508)
Data Point: (0.11288379, 0.30100508)
Data Point: (0.20691381, 0.30100508)
Data Point: (0.37926902, 0.30100508)
Data Point: (0.6951928, 0.30100508)
Data Point: (1.274275, 0.30100508)
Data Point: (2.3357215, 0.30100508)
Data Point: (4.2813324, 0.30100508)
Data Point: (7.8475997, 0.30100508)
Data Point: (14.384499, 0.30100508)
Data Point: (26.366509, 0.30100508)
Data Point: (48.329302, 0.30100508)
Data Point: (88.586679, 0.30100508)
Data Point: (162.37767, 0.2887592)

Data Point: (297.63514, 0.17412515)
Data Point: (545.55948, 0.076942285)
Data Point: (1,000, 0.051397358)
Estimation Properties
Vol. WC Estimation Method: Grain Size Function
Saturated Water Content: 0.3 ft^3/ft^3
Sample Material: Clay
Liquid Limit: 0 %
Diameter at 10% passing: 0.06
Diameter at 60% passing: 0.11
Maximum: 1,000
Minimum: 0.01
Num. Points: 20

Matl. 5 Soil Cement Armoring

Model: Vol WC Data Point Function
Function: Vol. Water Content vs. Pore-Water Pressure
Mv: 2.5e-006 /psf
Saturated Water Content: 0.30020276 ft^3/ft^3
Residual Water Content: 0.030020276 ft^3/ft^3
Curve Fit to Data: 100 %
Segment Curvature: 40 %
Porosity: 0.30020276
Data Points: Matric Suction (psf), Vol. Water Content (ft^3/ft^3)
Data Point: (0.01, 0.29987196)
Data Point: (0.018329807, 0.29987196)
Data Point: (0.033598183, 0.29987196)
Data Point: (0.061584821, 0.29987196)
Data Point: (0.11288379, 0.29987196)
Data Point: (0.20691381, 0.29987196)
Data Point: (0.37926902, 0.29987196)
Data Point: (0.6951928, 0.29987196)
Data Point: (1.274275, 0.29987196)
Data Point: (2.3357215, 0.29987196)
Data Point: (4.2813324, 0.29987196)
Data Point: (7.8475997, 0.29987196)
Data Point: (14.384499, 0.29987196)
Data Point: (26.366509, 0.29987196)
Data Point: (48.329302, 0.29987196)
Data Point: (88.586679, 0.29667682)
Data Point: (162.37767, 0.20150036)
Data Point: (297.63514, 0.085811521)
Data Point: (545.55948, 0.049379583)
Data Point: (1,000, 0.039446735)
Estimation Properties
Vol. WC Estimation Method: Grain Size Function
Saturated Water Content: 0.3 ft^3/ft^3
Sample Material: Clay

Liquid Limit: 0 %
Diameter at 10% passing: 0.07000000000000001
Diameter at 60% passing: 0.2
Maximum: 1,000
Minimum: 0.01
Num. Points: 20

Points

	X (ft)	Y (ft)
Point 1	-56.5	18
Point 2	-14.5	18
Point 3	-14.5	28
Point 4	-11.5	28
Point 5	-11.5	15
Point 6	-7	34.5
Point 7	-7	33.4
Point 8	6.8	33.4
Point 9	14	31
Point 10	13.7	30.1
Point 11	51.6	17.5
Point 12	54.2	15
Point 13	55.0033	16.4828
Point 14	54.9	16.4
Point 15	54.8636	16.2065
Point 16	55.097	16.0075
Point 17	55.3031	16.0832
Point 18	55.3561	16.2916
Point 19	55.3	16.4
Point 20	55.1797	16.4906
Point 21	62.3	15
Point 22	59.3	16
Point 23	57.8	16.5
Point 24	61	16.5
Point 25	7	34.5
Point 26	62.3	13.5
Point 27	70.3	13.5
Point 28	70.3	11.5

Point 29	72.3	11.5
Point 30	72.3	13.5
Point 31	72.3	15
Point 32	65.5	15
Point 33	62.5	16
Point 34	-90.5	13.5
Point 35	100	15
Point 36	100	13.5
Point 37	100	-14.5
Point 38	-90.5	-14.5
Point 39	100	-114.5
Point 40	-90.5	-114.5
Point 41	-180	15
Point 42	-180	13.5
Point 43	-180	-14.5
Point 44	-180	-114.5
Point 45	1,600	15
Point 46	1,600	13.5
Point 47	1,600	-14.5
Point 48	1,600	-114.5
Point 49	41.5	23
Point 50	55.3546	16.1839
Point 51	54.9487	16.066
Point 52	55.2227	16.0254
Point 53	-1,700	15
Point 54	-1,700	13.5
Point 55	-1,700	-14.5
Point 56	-1,700	-114.5
Point 57	-65.5	13.5
Point 58	-55.5	13.5
Point 59	-55.5	15
Point 60	-55.5	16
Point 61	-55.5	17
Point 62	-55.5	18
Point 63	-11.5	16
Point 64	-12.5	16

Point 65	-12.5	17
Point 66	-56.5	16
Point 67	-56.5	17
Point 68	-65.5	15
Point 69	-56.5	15
Point 70	-70.5	13.5
Point 71	-70.5	14.25
Point 72	-65.5	14.25
Point 73	-70.5	15
Point 74	-85.5	13.5
Point 75	-85.5	14.25
Point 76	-85.5	15
Point 77	-90.5	15
Point 78	-85.9	13.5
Point 79	-85.9	14.25
Point 80	-88.1	15
Point 81	-85.8	15
Point 82	-102.5	19
Point 83	-128.5	15
Point 84	-116.5	19
Point 85	-85.9	15
Point 86	-119.5	18
Point 87	-99.5	18

Lines

	Start Point	End Point	Hydraulic Boundary
Line 1	2	3	
Line 2	3	4	
Line 3	1	6	Drainage
Line 4	6	7	
Line 5	7	8	
Line 6	8	9	
Line 7	9	10	
Line 8	10	11	
Line 9	11	12	

Line 10	12	5	
Line 11	13	14	
Line 12	14	15	
Line 13	18	19	
Line 14	19	20	
Line 15	20	13	
Line 16	12	21	
Line 17	21	22	
Line 18	22	16	
Line 19	20	23	
Line 20	23	9	
Line 21	23	24	
Line 22	25	6	
Line 23	21	26	
Line 24	26	27	
Line 25	27	28	
Line 26	28	29	
Line 27	29	30	
Line 28	30	31	
Line 29	31	32	K-05 WAF Normal Pool at Elev. 23ft
Line 30	32	33	K-05 WAF Normal Pool at Elev. 23ft
Line 31	33	22	
Line 32	31	35	K-05 WAF Normal Pool at Elev. 23ft
Line 33	35	36	
Line 34	36	30	
Line 35	36	37	
Line 36	37	38	
Line 37	38	34	
Line 38	37	39	
Line 39	39	40	
Line 40	40	38	
Line 41	34	42	
Line 42	42	41	
Line 43	38	43	
Line 44	43	42	
Line 45	40	44	

Line 46	44	43	
Line 47	35	45	K-05 WAF Normal Pool at Elev. 23ft
Line 48	45	46	
Line 49	46	36	
Line 50	46	47	
Line 51	47	37	
Line 52	47	48	
Line 53	48	39	
Line 54	24	49	K-05 WAF Normal Pool at Elev. 23ft
Line 55	49	25	
Line 56	23	22	
Line 57	24	33	K-05 WAF Normal Pool at Elev. 23ft
Line 58	17	50	
Line 59	50	18	
Line 60	15	51	
Line 61	51	16	
Line 62	16	52	
Line 63	52	17	
Line 64	53	41	PR at Elev. 18ft
Line 65	42	54	
Line 66	54	53	
Line 67	43	55	
Line 68	55	54	
Line 69	44	56	
Line 70	56	55	
Line 71	26	58	
Line 72	1	62	
Line 73	62	2	
Line 74	58	59	
Line 75	59	60	
Line 76	60	61	
Line 77	61	62	
Line 78	5	59	
Line 79	4	63	
Line 80	63	5	
Line 81	63	64	

Line 82	64	60	
Line 83	64	65	
Line 84	60	66	
Line 85	67	66	Drainage
Line 86	61	67	
Line 87	67	1	
Line 88	58	57	
Line 89	66	69	
Line 90	69	68	
Line 91	57	70	
Line 92	68	72	
Line 93	72	71	
Line 94	73	71	
Line 95	68	73	Drainage
Line 96	70	74	
Line 97	75	76	
Line 98	71	75	
Line 99	73	76	Drainage
Line 100	72	57	
Line 101	70	71	
Line 102	74	75	
Line 103	74	78	
Line 104	78	34	
Line 105	77	34	
Line 106	78	79	
Line 107	79	80	
Line 108	80	77	Drainage
Line 109	75	79	
Line 110	77	83	
Line 111	84	82	
Line 112	83	41	PR at Elev. 18ft
Line 113	81	85	
Line 114	85	80	Drainage
Line 115	81	76	Drainage
Line 116	79	85	
Line 117	83	86	PR at Elev. 18ft

Line 118	86	84	
Line 119	77	87	Drainage
Line 120	87	82	
Line 121	65	61	

Regions

	Material	Points	Area (ft²)
Region 1	Matl. 1 - Embankment Material	1,6,7,8,9,10,11,12,5,63,4,3,2,62	1,101.7
Region 2		13,14,15,51,16,52,17,50,18,19,20	0.18474
Region 3	Matl. 8 - Filter Sand	9,10,11,12,21,22,16,51,15,14,13,20,23	52.737
Region 4	Matl. 5 - Soil Cement Armoring	6,7,8,9,23,24,49,25	74.19
Region 5	Matl. 5 - Soil Cement Armoring	22,21,26,27,28,29,30,31,32,33	22.2
Region 6	Matl. 2 - Surficial Overburden Layer	31,35,36,30	41.55
Region 7	Matl. 4 - Deeper Marine Deposits	38,37,39,40	19,050
Region 8	Matl. 3 - Shallow Alluvial Deposits	42,34,38,43	2,506
Region 9	Matl. 4 - Deeper Marine Deposits	43,38,40,44	8,950
Region 10	Matl. 2 - Surficial Overburden Layer	35,45,46,36	2,250
Region 11	Matl. 3 - Shallow Alluvial Deposits	36,46,47,37	42,000
Region 12	Matl. 4 - Deeper Marine Deposits	37,47,48,39	1.5e+005
Region 13	Matl. 8 - Filter Sand	20,23,22,16,52,17,50,18,19	1.5978
Region 14	Matl. 5 - Soil Cement Armoring	23,24,33,22	1.6

Region 15	Matl. 2 - Surficial Overburden Layer	53,41,42,54	2,280
Region 16	Matl. 3 - Shallow Alluvial Deposits	42,43,55,54	42,560
Region 17	Matl. 4 - Deeper Marine Deposits	55,43,44,56	1.52e+005
Region 18	Matl. 3 - Shallow Alluvial Deposits	34,38,37,36,30,29,28,27,26,58,57,70,74,78	5,330
Region 19	Matl. 2 - Surficial Overburden Layer	59,58,26,21,12,5	176.7
Region 20	Matl. 8 - Filter Sand	60,59,5,63,64	44
Region 21	Matl. 6 - Fine Drainage Gravel	61,60,64,65	43
Region 22	Matl. 8 - Filter Sand	62,61,65,64,63,4,3,2	75
Region 23	Matl. 6 - Fine Drainage Gravel	67,66,60,61	1
Region 24	Matl. 9 Concrete Outfall Works	1,62,61,67	1
Region 25	Matl. 9 Concrete Outfall Works	68,72,57,58,59,60,66,69	16
Region 26	Matl. 2 - Surficial Overburden Layer	73,71,72,68	3.75
Region 27	Matl. 2 - Surficial Overburden Layer	76,75,71,73	11.25
Region 28	Matl. 2 - Surficial Overburden Layer	71,72,57,70	3.75
Region 29	Matl. 2 - Surficial Overburden Layer	71,70,74,75	11.25
Region 30	Matl. 2 - Surficial Overburden Layer	77,34,78,79,80	6.075
Region 31	Matl. 2 - Surficial Overburden Layer	79,78,74,75	0.3
Region 32	Matl. 1 - Embankment Material	77,83,86,84,82,87	104

Region 33	Matl. 2 - Surficial Overburden Layer	41,42,34,77,83	134.25
Region 34	Matl. 2 - Surficial Overburden Layer	85,81,76,75,79	0.3
Region 35	Matl. 2 - Surficial Overburden Layer	80,85,79	0.825

Steady-State Seepage (EOC)

Report generated using GeoStudio 2012. Copyright © 1991-2013 GEO-SLOPE International Ltd.

File Information

Title: LOWP PIR Analysis Section H
Created By: Viessman, Michael W CIV USARMY CESAJ (US)
Last Edited By: Viessman, Michael W CIV USARMY CESAJ (US)
Revision Number: 537
File Version: 8.2
Tool Version: 8.12.3.7901
Date: 8/26/2018
Time: 9:02:51 PM
File Name: Section H EOC USP-DSP w toe drain.gsz
Directory: C:\Users\k3engmwv\Documents\LOWP\FY17-18 PIR Work\SEEP and SLOPEW Files\
Last Solved Date: 8/26/2018
Last Solved Time: 8:03:02 PM

Project Settings

Length(L) Units: feet
Time(t) Units: Seconds
Force(F) Units: lbf
Pressure(p) Units: psf
Mass(M) Units: lbs
Mass Flux Units: lbs/sec
Unit Weight of Water: 62.4 pcf
View: 2D
Element Thickness: 1

Analysis Settings

Steady-State Seepage (EOC)

Description: No U/S pool, toe drain, no PR wse, groundwater at 10ft
Kind: SEEP/W
Method: Steady-State
Settings
    Include Air Flow: No
Control
    Apply Runoff: Yes
Convergence
    Maximum Number of Iterations: 1,000
    Minimum Pressure Head Difference: 0.005
    Significant Digits: 2

Max # of Reviews: 10
Hydraulic Under-Relaxation Criteria
Under-Relaxation Initial Rate: 1
Under-Relaxation Min. Rate: 0.1
Under-Relaxation Reduction Rate: 0.65
Under-Relaxation Iterations: 10
Equation Solver: Parallel Direct
Time
Starting Time: 0 sec
Duration: 0 sec
Ending Time: 0 sec

Materials

Matl. 1 - Embankment Material

Model: Saturated / Unsaturated
Hydraulic
K-Function: Matl. 1 Embankment Material
Ky'/Kx' Ratio: 0.25
Rotation: 0 °
Vol. WC. Function: Matl. 1 Embankment Fill from Borrow Areas

Matl. 2 - Surficial Overburden Layer

Model: Saturated / Unsaturated
Hydraulic
K-Function: Matl. 2 Surficial Overburden Layer
Ky'/Kx' Ratio: 0.1
Rotation: 0 °
Vol. WC. Function: Matl. 2 Surficial Overburden Layer

Matl. 3 - Shallow Alluvial Deposits

Model: Saturated / Unsaturated
Hydraulic
K-Function: Matl. 3 Shallow Alluvial Deposits
Ky'/Kx' Ratio: 0.1
Rotation: 0 °
Vol. WC. Function: Matl. 3 Shallow Alluvial Deposits

Matl. 4 - Deeper Marine Deposits

Model: Saturated / Unsaturated
Hydraulic
K-Function: Matl. 4 Deeper Marine Deposits
Ky'/Kx' Ratio: 0.1
Rotation: 0 °
Vol. WC. Function: Matl. 4 Deeper Marine Deposits

Matl. 5 - Soil Cement Armoring

Model: Saturated / Unsaturated
Hydraulic
K-Function: Matl. 5 Soil Cement Armoring
Ky'/Kx' Ratio: 1
Rotation: 0 °
Vol. WC. Function: Matl. 5 Soil Cement Armoring

Matl. 6 - Fine Drainage Gravel

Model: Saturated / Unsaturated
Hydraulic
K-Function: Matl. 6 Fine Drainage Gravel
Ky'/Kx' Ratio: 1
Rotation: 0 °
Vol. WC. Function: Mat. 6 Fine Drainage Gravel (No 89)

Matl. 8 - Filter Sand

Model: Saturated / Unsaturated
Hydraulic
K-Function: Matl. 8 Filter Sand
Ky'/Kx' Ratio: 1
Rotation: 0 °
Vol. WC. Function: Matl. 8 Filter Sand (C33)

Matl. 9 Concrete Outfall Works

Model: Saturated Only
Hydraulic
K-Sat: 3.28e-010 ft/sec
Ky'/Kx' Ratio: 1
Rotation: 0 °
Volumetric Water Content: 0.3 ft^3/ft^3
Mv: 1e-008 /psf

Boundary Conditions

Drainage

Type: Total Flux (Q) 0
Review: Yes

Groundwater at Elev. 10ft

Type: Head (H) 10
Review: No

Flux Sections

Flux Section 1

Coordinates

Coordinate: (-56.368089, 17.11908) ft
Coordinate: (-56.359991, 15.897243) ft

Flux Section 2

Coordinates

Coordinate: (-100.27362, 18.818898) ft
Coordinate: (-86.017717, 14.05315) ft
Coordinate: (-65.383858, 14.059055) ft

Flux Section 3

Coordinates

Coordinate: (-11.352061, 28.166901) ft
Coordinate: (-11.307284, 14.896151) ft

Flux Section 4

Coordinates

Coordinate: (-11.307284, 14.851374) ft
Coordinate: (-55.502072, 14.873763) ft

Flux Section 5

Coordinates

Coordinate: (-0.349869, 33.216015) ft
Coordinate: (-0.361475, -114.73943) ft

Flux Section 6

Coordinates

Coordinate: (-109.10947, 18.913159) ft
Coordinate: (-109.07273, -114.73608) ft

K Functions

Matl. 1 Embankment Material

Model: Hyd K Data Point Function
Function: X-Conductivity vs. Pore-Water Pressure
Curve Fit to Data: 100 %
Segment Curvature: 36 %
K-Saturation: 0.000131
Data Points: Matric Suction (psf), X-Conductivity (ft/sec)
Data Point: (0.01, 0.000131)
Data Point: (0.018329807, 0.00013099927)
Data Point: (0.033598183, 0.00013099852)
Data Point: (0.061584821, 0.00013099772)

Data Point: (0.11288379, 0.00013099684)
Data Point: (0.20691381, 0.00013099581)
Data Point: (0.37926902, 0.0001309945)
Data Point: (0.6951928, 0.00013099268)
Data Point: (1.274275, 0.00013098992)
Data Point: (2.3357215, 0.00013098549)
Data Point: (4.2813324, 0.0001309777)
Data Point: (7.8475997, 0.00013096339)
Data Point: (14.384499, 0.00013094955)
Data Point: (26.366509, 0.00013089452)
Data Point: (48.329302, 0.00013043835)
Data Point: (88.586679, 0.00012910123)
Data Point: (162.37767, 5.664247e-005)
Data Point: (297.63514, 2.5159921e-006)
Data Point: (545.55948, 4.7485927e-008)
Data Point: (1,000, 1.7886028e-009)

Estimation Properties

Hyd. K-Function Estimation Method: Fredlund-Xing Function
Volume Water Content Function: Matl. 1 Embankment Fill from Borrow Areas
Hydraulic K Sat: 0.000131 ft/sec
Residual Water Content: 0.0495 ft^3/ft^3
Maximum: 1,000
Minimum: 0.01
Num. Points: 20

Matl. 4 Deeper Marine Deposits

Model: Hyd K Data Point Function
Function: X-Conductivity vs. Pore-Water Pressure
Curve Fit to Data: 100 %
Segment Curvature: 44 %
K-Saturation: 0.000984
Data Points: Matric Suction (psf), X-Conductivity (ft/sec)
Data Point: (0.01, 0.000984)
Data Point: (0.018329807, 0.00098398585)
Data Point: (0.033598183, 0.00098397151)
Data Point: (0.061584821, 0.00098395679)
Data Point: (0.11288379, 0.00098394139)
Data Point: (0.20691381, 0.00098392476)
Data Point: (0.37926902, 0.00098390584)
Data Point: (0.6951928, 0.00098388274)
Data Point: (1.274275, 0.00098385199)
Data Point: (2.3357215, 0.0009838074)
Data Point: (4.2813324, 0.00098373618)
Data Point: (7.8475997, 0.00098361453)
Data Point: (14.384499, 0.0009834543)
Data Point: (26.366509, 0.00098304118)
Data Point: (48.329302, 0.00098089274)
Data Point: (88.586679, 0.00098804841)

Data Point: (162.37767, 0.00089693201)
Data Point: (297.63514, 0.00029836287)
Data Point: (545.55948, 5.5741791e-006)
Data Point: (1,000, 8.8545842e-008)

Estimation Properties

Hyd. K-Function Estimation Method: Fredlund-Xing Function
Volume Water Content Function: Matl. 4 Deeper Marine Deposits
Hydraulic K Sat: 0.000984 ft/sec
Residual Water Content: 0.03 ft^3/ft^3
Maximum: 1,000
Minimum: 0.01
Num. Points: 20

Matl. 6 Fine Drainage Gravel

Model: Hyd K Data Point Function
Function: X-Conductivity vs. Pore-Water Pressure

Curve Fit to Data: 100 %
Segment Curvature: 40 %

K-Saturation: 0.02315
Data Points: Matric Suction (psf), X-Conductivity (ft/sec)

Data Point: (0.01, 0.02315)
Data Point: (0.018329807, 0.023149999)
Data Point: (0.033598183, 0.023149997)
Data Point: (0.061584821, 0.023149994)
Data Point: (0.11288379, 0.023149984)
Data Point: (0.20691381, 0.023149981)
Data Point: (0.37926902, 0.023150055)
Data Point: (0.6951928, 0.023149315)
Data Point: (1.274275, 0.02314882)
Data Point: (2.3357215, 0.023163455)
Data Point: (4.2813324, 0.02041826)
Data Point: (7.8475997, 0.0039249052)
Data Point: (14.384499, 6.6024733e-005)
Data Point: (26.366509, 7.000732e-007)
Data Point: (48.329302, 2.0374523e-008)
Data Point: (88.586679, 3.5541328e-009)
Data Point: (162.37767, 7.5581773e-010)
Data Point: (297.63514, 1.5822386e-010)
Data Point: (545.55948, 2.6567478e-011)
Data Point: (1,000, 2.4617797e-012)

Estimation Properties

Hyd. K-Function Estimation Method: Fredlund-Xing Function
Volume Water Content Function: Mat. 6 Fine Drainage Gravel (No 89)
Hydraulic K Sat: 0.02315 ft/sec
Residual Water Content: 0.042 ft^3/ft^3
Maximum: 1,000
Minimum: 0.01
Num. Points: 20

Matl. 2 Surficial Overburden Layer

Model: Hyd K Data Point Function
Function: X-Conductivity vs. Pore-Water Pressure
Curve Fit to Data: 100 %
Segment Curvature: 36 %
K-Saturation: 0.00026
Data Points: Matric Suction (psf), X-Conductivity (ft/sec)
Data Point: (0.01, 0.00026)
Data Point: (0.018329807, 0.00025999835)
Data Point: (0.033598183, 0.00025999664)
Data Point: (0.061584821, 0.00025999485)
Data Point: (0.11288379, 0.00025999288)
Data Point: (0.20691381, 0.00025999062)
Data Point: (0.37926902, 0.00025998779)
Data Point: (0.6951928, 0.00025998393)
Data Point: (1.274275, 0.00025997819)
Data Point: (2.3357215, 0.00025996907)
Data Point: (4.2813324, 0.00025995329)
Data Point: (7.8475997, 0.00025992467)
Data Point: (14.384499, 0.00025989276)
Data Point: (26.366509, 0.00025978642)
Data Point: (48.329302, 0.00025903344)
Data Point: (88.586679, 0.0002586222)
Data Point: (162.37767, 0.00013432217)
Data Point: (297.63514, 8.1547435e-006)
Data Point: (545.55948, 1.3663567e-007)
Data Point: (1,000, 4.5608744e-009)
Estimation Properties
Hyd. K-Function Estimation Method: Fredlund-Xing Function
Volume Water Content Function: Matl. 2 Surficial Overburden Layer
Hydraulic K Sat: 0.00026 ft/sec
Residual Water Content: 0.0495 ft^3/ft^3
Maximum: 1,000
Minimum: 0.01
Num. Points: 20

Matl. 3 Shallow Alluvial Deposits

Model: Hyd K Data Point Function
Function: X-Conductivity vs. Pore-Water Pressure
Curve Fit to Data: 100 %
Segment Curvature: 36 %
K-Saturation: 0.00174
Data Points: Matric Suction (psf), X-Conductivity (ft/sec)
Data Point: (0.01, 0.00174)
Data Point: (0.018329807, 0.0017399903)
Data Point: (0.033598183, 0.0017399803)
Data Point: (0.061584821, 0.0017399698)

Data Point: (0.11288379, 0.0017399581)
Data Point: (0.20691381, 0.0017399444)
Data Point: (0.37926902, 0.0017399269)
Data Point: (0.6951928, 0.0017399027)
Data Point: (1.274275, 0.0017398661)
Data Point: (2.3357215, 0.0017398072)
Data Point: (4.2813324, 0.0017397038)
Data Point: (7.8475997, 0.0017395137)
Data Point: (14.384499, 0.0017393299)
Data Point: (26.366509, 0.001738599)
Data Point: (48.329302, 0.0017325399)
Data Point: (88.586679, 0.0017147796)
Data Point: (162.37767, 0.00075235037)
Data Point: (297.63514, 3.3418521e-005)
Data Point: (545.55948, 6.307291e-007)
Data Point: (1,000, 2.3757014e-008)

Estimation Properties
Hyd. K-Function Estimation Method: Fredlund-Xing Function
Volume Water Content Function: Matl. 3 Shallow Alluvial Deposits
Hydraulic K Sat: 0.00174 ft/sec
Residual Water Content: 0.0495 ft^3/ft^3
Maximum: 1,000
Minimum: 0.01
Num. Points: 20

Matl. 5 Soil Cement Armoring

Model: Hyd K Data Point Function
Function: X-Conductivity vs. Pore-Water Pressure
Curve Fit to Data: 100 %
Segment Curvature: 44 %
K-Saturation: 1.31e-005
Data Points: Matric Suction (psf), X-Conductivity (ft/sec)
Data Point: (0.01, 1.31e-005)
Data Point: (0.018329807, 1.3099927e-005)
Data Point: (0.033598183, 1.3099852e-005)
Data Point: (0.061584821, 1.3099772e-005)
Data Point: (0.11288379, 1.3099684e-005)
Data Point: (0.20691381, 1.3099581e-005)
Data Point: (0.37926902, 1.309945e-005)
Data Point: (0.6951928, 1.3099268e-005)
Data Point: (1.274275, 1.3098992e-005)
Data Point: (2.3357215, 1.3098549e-005)
Data Point: (4.2813324, 1.309777e-005)
Data Point: (7.8475997, 1.3096339e-005)
Data Point: (14.384499, 1.3094955e-005)
Data Point: (26.366509, 1.3089452e-005)
Data Point: (48.329302, 1.3043835e-005)
Data Point: (88.586679, 1.2910123e-005)

Data Point: (162.37767, 5.664247e-006)
Data Point: (297.63514, 2.5159921e-007)
Data Point: (545.55948, 4.7485927e-009)
Data Point: (1,000, 1.7886028e-010)

Estimation Properties

Hyd. K-Function Estimation Method: Fredlund-Xing Function
Volume Water Content Function: Matl. 5 Soil Cement Armoring
Hydraulic K Sat: 1.31e-005 ft/sec
Residual Water Content: 0.03 ft^3/ft^3
Maximum: 1,000
Minimum: 0.01
Num. Points: 20

Matl. 8 Filter Sand

Model: Hyd K Data Point Function
Function: X-Conductivity vs. Pore-Water Pressure

Curve Fit to Data: 100 %
Segment Curvature: 44 %

K-Saturation: 0.000925
Data Points: Matric Suction (psf), X-Conductivity (ft/sec)

Data Point: (0.01, 0.000925)
Data Point: (0.018329807, 0.00092499993)
Data Point: (0.033598183, 0.00092499981)
Data Point: (0.061584821, 0.0009249996)
Data Point: (0.11288379, 0.00092499919)
Data Point: (0.20691381, 0.00092499854)
Data Point: (0.37926902, 0.00092499785)
Data Point: (0.6951928, 0.00092499117)
Data Point: (1.274275, 0.00092498427)
Data Point: (2.3357215, 0.00092515575)
Data Point: (4.2813324, 0.00092444336)
Data Point: (7.8475997, 0.00092025484)
Data Point: (14.384499, 0.00086768248)
Data Point: (26.366509, 0.00022215817)
Data Point: (48.329302, 5.6149022e-006)
Data Point: (88.586679, 9.4931606e-008)
Data Point: (162.37767, 4.4270536e-009)
Data Point: (297.63514, 6.3580973e-010)
Data Point: (545.55948, 1.1244323e-010)
Data Point: (1,000, 1.0762229e-011)

Estimation Properties

Hyd. K-Function Estimation Method: Fredlund-Xing Function
Volume Water Content Function: Matl. 8 Filter Sand (C33)
Hydraulic K Sat: 0.000925 ft/sec
Residual Water Content: 0.03 ft^3/ft^3
Maximum: 1,000
Minimum: 0.01
Num. Points: 20

Vol. Water Content Functions

Matl. 3 Shallow Alluvial Deposits

Model: Vol WC Data Point Function
Function: Vol. Water Content vs. Pore-Water Pressure
Mv: 2.5e-006 /psf
Saturated Water Content: 0.30020276 ft^3/ft^3
Residual Water Content: 0.030020276 ft^3/ft^3
Curve Fit to Data: 100 %
Segment Curvature: 40 %
Porosity: 0.30020276
Data Points: Matric Suction (psf), Vol. Water Content (ft^3/ft^3)
Data Point: (0.01, 0.29987196)
Data Point: (0.018329807, 0.29987196)
Data Point: (0.033598183, 0.29987196)
Data Point: (0.061584821, 0.29987196)
Data Point: (0.11288379, 0.29987196)
Data Point: (0.20691381, 0.29987196)
Data Point: (0.37926902, 0.29987196)
Data Point: (0.6951928, 0.29987196)
Data Point: (1.274275, 0.29987196)
Data Point: (2.3357215, 0.29987196)
Data Point: (4.2813324, 0.29987196)
Data Point: (7.8475997, 0.29987196)
Data Point: (14.384499, 0.29987196)
Data Point: (26.366509, 0.29987196)
Data Point: (48.329302, 0.29987196)
Data Point: (88.586679, 0.29667682)
Data Point: (162.37767, 0.20150036)
Data Point: (297.63514, 0.085811521)
Data Point: (545.55948, 0.049379583)
Data Point: (1,000, 0.039446735)
Estimation Properties
Vol. WC Estimation Method: Grain Size Function
Saturated Water Content: 0.3 ft^3/ft^3
Sample Material: Clay
Liquid Limit: 0 %
Diameter at 10% passing: 0.07000000000000001
Diameter at 60% passing: 0.2
Maximum: 1,000
Minimum: 0.01
Num. Points: 20

Matl. 1 Embankment Fill from Borrow Areas

Model: Vol WC Data Point Function
Function: Vol. Water Content vs. Pore-Water Pressure
Mv: 2.5e-006 /psf

Saturated Water Content: 0.30020276 ft^3/ft^3
Residual Water Content: 0.030020276 ft^3/ft^3
Curve Fit to Data: 100 %
Segment Curvature: 40 %
Porosity: 0.30020276
Data Points: Matric Suction (psf), Vol. Water Content (ft^3/ft^3)
Data Point: (0.01, 0.29987196)
Data Point: (0.018329807, 0.29987196)
Data Point: (0.033598183, 0.29987196)
Data Point: (0.061584821, 0.29987196)
Data Point: (0.11288379, 0.29987196)
Data Point: (0.20691381, 0.29987196)
Data Point: (0.37926902, 0.29987196)
Data Point: (0.6951928, 0.29987196)
Data Point: (1.274275, 0.29987196)
Data Point: (2.3357215, 0.29987196)
Data Point: (4.2813324, 0.29987196)
Data Point: (7.8475997, 0.29987196)
Data Point: (14.384499, 0.29987196)
Data Point: (26.366509, 0.29987196)
Data Point: (48.329302, 0.29987196)
Data Point: (88.586679, 0.29667682)
Data Point: (162.37767, 0.20150036)
Data Point: (297.63514, 0.085811521)
Data Point: (545.55948, 0.049379583)
Data Point: (1,000, 0.039446735)
Estimation Properties
Vol. WC Estimation Method: Grain Size Function
Saturated Water Content: 0.3 ft^3/ft^3
Sample Material: Clay
Liquid Limit: 0 %
Diameter at 10% passing: 0.07000000000000001
Diameter at 60% passing: 0.2
Maximum: 1,000
Minimum: 0.01
Num. Points: 20

Matl. 2 Surficial Overburden Layer

Model: Vol WC Data Point Function
Function: Vol. Water Content vs. Pore-Water Pressure
Mv: 2.5e-006 /psf
Saturated Water Content: 0.30132774 ft^3/ft^3
Residual Water Content: 0.030132774 ft^3/ft^3
Curve Fit to Data: 100 %
Segment Curvature: 40 %
Porosity: 0.30132774
Data Points: Matric Suction (psf), Vol. Water Content (ft^3/ft^3)
Data Point: (0.01, 0.30110223)

Data Point: (0.018329807, 0.30110223)
Data Point: (0.033598183, 0.30110223)
Data Point: (0.061584821, 0.30110223)
Data Point: (0.11288379, 0.30110223)
Data Point: (0.20691381, 0.30110223)
Data Point: (0.37926902, 0.30110223)
Data Point: (0.6951928, 0.30110223)
Data Point: (1.274275, 0.30110223)
Data Point: (2.3357215, 0.30110223)
Data Point: (4.2813324, 0.30110223)
Data Point: (7.8475997, 0.30110223)
Data Point: (14.384499, 0.30110223)
Data Point: (26.366509, 0.30110223)
Data Point: (48.329302, 0.30110223)
Data Point: (88.586679, 0.29938489)
Data Point: (162.37767, 0.21986255)
Data Point: (297.63514, 0.094851578)
Data Point: (545.55948, 0.051777012)
Data Point: (1,000, 0.040605935)

Estimation Properties
Vol. WC Estimation Method: Grain Size Function
Saturated Water Content: 0.3 ft^3/ft^3
Sample Material: Clay
Liquid Limit: 0 %
Diameter at 10% passing: 0.07000000000000001
Diameter at 60% passing: 0.18
Maximum: 1,000
Minimum: 0.01
Num. Points: 20

Matl. 8 Filter Sand (C33)

Model: Vol WC Data Point Function
Function: Vol. Water Content vs. Pore-Water Pressure
Mv: 8e-007 /psf
Saturated Water Content: 0.30081752 ft^3/ft^3
Residual Water Content: 0.030081752 ft^3/ft^3
Curve Fit to Data: 100 %
Segment Curvature: 48 %
Porosity: 0.30081752
Data Points: Matric Suction (psf), Vol. Water Content (ft^3/ft^3)
Data Point: (0.01, 0.30028388)
Data Point: (0.018329807, 0.30028388)
Data Point: (0.033598183, 0.30028388)
Data Point: (0.061584821, 0.30028388)
Data Point: (0.11288379, 0.30028388)
Data Point: (0.20691381, 0.30028388)
Data Point: (0.37926902, 0.30028388)
Data Point: (0.6951928, 0.30028388)

Data Point: (1.274275, 0.30028388)
Data Point: (2.3357215, 0.30028388)
Data Point: (4.2813324, 0.30028388)
Data Point: (7.8475997, 0.30028388)
Data Point: (14.384499, 0.28112842)
Data Point: (26.366509, 0.15065712)
Data Point: (48.329302, 0.048430554)
Data Point: (88.586679, 0.021674388)
Data Point: (162.37767, 0.016081301)
Data Point: (297.63514, 0.013674367)
Data Point: (545.55948, 0.011770874)
Data Point: (1,000, 0.010084825)

Estimation Properties

Vol. WC Estimation Method: Grain Size Function
Saturated Water Content: 0.3 ft^3/ft^3
Sample Material: Gravel
Liquid Limit: 0 %
Diameter at 10% passing: 0.38
Diameter at 60% passing: 1.6
Maximum: 1,000
Minimum: 0.01
Num. Points: 20

Mat. 6 Fine Drainage Gravel (No 89)

Model: Vol WC Data Point Function
Function: Vol. Water Content vs. Pore-Water Pressure

Mv: 4e-007 /psf
Saturated Water Content: 0.21947752 ft^3/ft^3
Residual Water Content: 0.021947752 ft^3/ft^3
Curve Fit to Data: 100 %
Segment Curvature: 48 %

Porosity: 0.21947752
Data Points: Matric Suction (psf), Vol. Water Content (ft^3/ft^3)

Data Point: (0.01, 0.21916427)
Data Point: (0.018329807, 0.21916427)
Data Point: (0.033598183, 0.21916427)
Data Point: (0.061584821, 0.21916427)
Data Point: (0.11288379, 0.21916427)
Data Point: (0.20691381, 0.21916427)
Data Point: (0.37926902, 0.21916427)
Data Point: (0.6951928, 0.21916427)
Data Point: (1.274275, 0.21916427)
Data Point: (2.3357215, 0.21916427)
Data Point: (4.2813324, 0.20182012)
Data Point: (7.8475997, 0.090949254)
Data Point: (14.384499, 0.021737158)
Data Point: (26.366509, 0.0080845337)
Data Point: (48.329302, 0.0057554944)

Data Point: (88.586679, 0.0048689464)
Data Point: (162.37767, 0.0041947283)
Data Point: (297.63514, 0.0036057207)
Data Point: (545.55948, 0.0030872724)
Data Point: (1,000, 0.002632805)
Estimation Properties
Vol. WC Estimation Method: Grain Size Function
Saturated Water Content: 0.21875 ft^3/ft^3
Sample Material: Clay
Liquid Limit: 0 %
Diameter at 10% passing: 3.5
Diameter at 60% passing: 7.1
Maximum: 1,000
Minimum: 0.01
Num. Points: 20

Matl. 4 Deeper Marine Deposits

Model: Vol WC Data Point Function
Function: Vol. Water Content vs. Pore-Water Pressure
Mv: 2.5e-006 /psf
Saturated Water Content: 0.30154597 ft^3/ft^3
Residual Water Content: 0.030154597 ft^3/ft^3
Curve Fit to Data: 100 %
Segment Curvature: 40 %
Porosity: 0.30154597
Data Points: Matric Suction (psf), Vol. Water Content (ft^3/ft^3)
Data Point: (0.01, 0.30100508)
Data Point: (0.018329807, 0.30100508)
Data Point: (0.033598183, 0.30100508)
Data Point: (0.061584821, 0.30100508)
Data Point: (0.11288379, 0.30100508)
Data Point: (0.20691381, 0.30100508)
Data Point: (0.37926902, 0.30100508)
Data Point: (0.6951928, 0.30100508)
Data Point: (1.274275, 0.30100508)
Data Point: (2.3357215, 0.30100508)
Data Point: (4.2813324, 0.30100508)
Data Point: (7.8475997, 0.30100508)
Data Point: (14.384499, 0.30100508)
Data Point: (26.366509, 0.30100508)
Data Point: (48.329302, 0.30100508)
Data Point: (88.586679, 0.30100508)
Data Point: (162.37767, 0.2887592)
Data Point: (297.63514, 0.17412515)
Data Point: (545.55948, 0.076942285)
Data Point: (1,000, 0.051397358)
Estimation Properties
Vol. WC Estimation Method: Grain Size Function

Saturated Water Content: 0.3 ft^3/ft^3
Sample Material: Clay
Liquid Limit: 0 %
Diameter at 10% passing: 0.06
Diameter at 60% passing: 0.11
Maximum: 1,000
Minimum: 0.01
Num. Points: 20

Matl. 5 Soil Cement Armoring

Model: Vol WC Data Point Function
Function: Vol. Water Content vs. Pore-Water Pressure
Mv: 2.5e-006 /psf
Saturated Water Content: 0.30020276 ft^3/ft^3
Residual Water Content: 0.030020276 ft^3/ft^3
Curve Fit to Data: 100 %
Segment Curvature: 40 %
Porosity: 0.30020276
Data Points: Matric Suction (psf), Vol. Water Content (ft^3/ft^3)
Data Point: (0.01, 0.29987196)
Data Point: (0.018329807, 0.29987196)
Data Point: (0.033598183, 0.29987196)
Data Point: (0.061584821, 0.29987196)
Data Point: (0.11288379, 0.29987196)
Data Point: (0.20691381, 0.29987196)
Data Point: (0.37926902, 0.29987196)
Data Point: (0.6951928, 0.29987196)
Data Point: (1.274275, 0.29987196)
Data Point: (2.3357215, 0.29987196)
Data Point: (4.2813324, 0.29987196)
Data Point: (7.8475997, 0.29987196)
Data Point: (14.384499, 0.29987196)
Data Point: (26.366509, 0.29987196)
Data Point: (48.329302, 0.29987196)
Data Point: (88.586679, 0.29667682)
Data Point: (162.37767, 0.20150036)
Data Point: (297.63514, 0.085811521)
Data Point: (545.55948, 0.049379583)
Data Point: (1,000, 0.039446735)
Estimation Properties
Vol. WC Estimation Method: Grain Size Function
Saturated Water Content: 0.3 ft^3/ft^3
Sample Material: Clay
Liquid Limit: 0 %
Diameter at 10% passing: 0.07000000000000001
Diameter at 60% passing: 0.2
Maximum: 1,000
Minimum: 0.01

Num. Points: 20

Points

	X (ft)	Y (ft)
Point 1	-56.5	18
Point 2	-14.5	18
Point 3	-14.5	28
Point 4	-11.5	28
Point 5	-11.5	15
Point 6	-7	34.5
Point 7	-7	33.4
Point 8	6.8	33.4
Point 9	14	31
Point 10	13.7	30.1
Point 11	51.6	17.5
Point 12	54.2	15
Point 13	55.0033	16.4828
Point 14	54.9	16.4
Point 15	54.8636	16.2065
Point 16	55.097	16.0075
Point 17	55.3031	16.0832
Point 18	55.3561	16.2916
Point 19	55.3	16.4
Point 20	55.1797	16.4906
Point 21	62.3	15
Point 22	59.3	16
Point 23	57.8	16.5
Point 24	61	16.5
Point 25	7	34.5
Point 26	62.3	13.5
Point 27	70.3	13.5
Point 28	70.3	11.5
Point 29	72.3	11.5
Point 30	72.3	13.5
Point 31	72.3	15

Point 32	65.5	15
Point 33	62.5	16
Point 34	-90.5	13.5
Point 35	100	15
Point 36	100	13.5
Point 37	100	-14.5
Point 38	-90.5	-14.5
Point 39	100	-114.5
Point 40	-90.5	-114.5
Point 41	-180	15
Point 42	-180	13.5
Point 43	-180	-14.5
Point 44	-180	-114.5
Point 45	1,600	15
Point 46	1,600	13.5
Point 47	1,600	-14.5
Point 48	1,600	-114.5
Point 49	41.5	23
Point 50	55.3546	16.1839
Point 51	54.9487	16.066
Point 52	55.2227	16.0254
Point 53	-1,700	15
Point 54	-1,700	13.5
Point 55	-1,700	-14.5
Point 56	-1,700	-114.5
Point 57	-65.5	13.5
Point 58	-55.5	13.5
Point 59	-55.5	15
Point 60	-55.5	16
Point 61	-55.5	17
Point 62	-55.5	18
Point 63	-11.5	16
Point 64	-12.5	16
Point 65	-12.5	17
Point 66	-56.5	16
Point 67	-56.5	17

Point 68	-65.5	15
Point 69	-56.5	15
Point 70	-70.5	13.5
Point 71	-70.5	14.25
Point 72	-65.5	14.25
Point 73	-70.5	15
Point 74	-85.5	13.5
Point 75	-85.5	14.25
Point 76	-85.5	15
Point 77	-90.5	15
Point 78	-85.9	13.5
Point 79	-85.9	14.25
Point 80	-88.1	15
Point 81	-85.8	15
Point 82	-100.1	19
Point 83	-97.8	19
Point 84	-102.5	19
Point 85	-128.5	15
Point 86	-116.5	19
Point 87	-85.9	15
Point 88	-119.5	18
Point 89	-99.5	18
Point 90	-94.8	18
Point 91	29.5	27

Lines

	Start Point	End Point	Hydraulic Boundary
Line 1	2	3	
Line 2	3	4	
Line 3	1	6	Drainage
Line 4	6	7	
Line 5	7	8	
Line 6	8	9	
Line 7	9	10	
Line 8	10	11	

Line 9	11	12	
Line 10	12	5	
Line 11	13	14	
Line 12	14	15	
Line 13	18	19	
Line 14	19	20	
Line 15	20	13	
Line 16	12	21	
Line 17	21	22	
Line 18	22	16	
Line 19	20	23	
Line 20	23	9	
Line 21	23	24	
Line 22	25	6	
Line 23	21	26	
Line 24	26	27	
Line 25	27	28	
Line 26	28	29	
Line 27	29	30	
Line 28	30	31	
Line 29	31	32	Groundwater at Elev. 10ft
Line 30	32	33	
Line 31	33	22	
Line 32	31	35	Groundwater at Elev. 10ft
Line 33	35	36	
Line 34	36	30	
Line 35	36	37	
Line 36	37	38	
Line 37	38	34	
Line 38	37	39	
Line 39	39	40	
Line 40	40	38	
Line 41	34	42	
Line 42	42	41	
Line 43	38	43	
Line 44	43	42	

Line 45	40	44	
Line 46	44	43	
Line 47	35	45	Groundwater at Elev. 10ft
Line 48	45	46	
Line 49	46	36	
Line 50	46	47	
Line 51	47	37	
Line 52	47	48	
Line 53	48	39	
Line 54	24	49	
Line 55	23	22	
Line 56	24	33	
Line 57	17	50	
Line 58	50	18	
Line 59	15	51	
Line 60	51	16	
Line 61	16	52	
Line 62	52	17	
Line 63	53	41	Groundwater at Elev. 10ft
Line 64	42	54	
Line 65	54	53	
Line 66	43	55	
Line 67	55	54	
Line 68	44	56	
Line 69	56	55	
Line 70	26	58	
Line 71	1	62	
Line 72	62	2	
Line 73	58	59	
Line 74	59	60	
Line 75	60	61	
Line 76	61	62	
Line 77	5	59	
Line 78	4	63	
Line 79	63	5	
Line 80	63	64	

Line 81	64	60	
Line 82	64	65	
Line 83	60	66	
Line 84	67	66	Drainage
Line 85	61	67	
Line 86	67	1	
Line 87	58	57	
Line 88	66	69	
Line 89	69	68	
Line 90	57	70	
Line 91	68	72	
Line 92	72	71	
Line 93	73	71	
Line 94	68	73	Drainage
Line 95	70	74	
Line 96	75	76	
Line 97	71	75	
Line 98	73	76	Drainage
Line 99	72	57	
Line 100	70	71	
Line 101	74	75	
Line 102	74	78	
Line 103	78	34	
Line 104	77	34	
Line 105	78	79	
Line 106	79	80	
Line 107	80	77	
Line 108	75	79	
Line 109	80	82	
Line 110	82	83	
Line 111	84	82	
Line 112	77	85	
Line 113	86	84	
Line 114	85	41	Groundwater at Elev. 10ft
Line 115	81	87	
Line 116	87	80	

Line 117	81	76	Drainage
Line 118	79	87	
Line 119	85	88	
Line 120	88	86	
Line 121	77	89	
Line 122	89	84	
Line 123	83	90	
Line 124	90	81	Drainage
Line 125	65	61	
Line 126	49	91	
Line 127	91	25	

Regions

	Material	Points	Area (ft²)
Region 1	Matl. 1 - Embankment Material	1,6,7,8,9,10,11,12,5,63,4,3,2,62	1,101.7
Region 2		13,14,15,51,16,52,17,50,18,19,20	0.18474
Region 3	Matl. 8 - Filter Sand	9,10,11,12,21,22,16,51,15,14,13,20,23	52.737
Region 4	Matl. 5 - Soil Cement Armoring	6,7,8,9,23,24,49,91,25	74.19
Region 5	Matl. 5 - Soil Cement Armoring	22,21,26,27,28,29,30,31,32,33	22.2
Region 6	Matl. 2 - Surficial Overburden Layer	31,35,36,30	41.55
Region 7	Matl. 4 - Deeper Marine Deposits	38,37,39,40	19,050
Region 8	Matl. 3 - Shallow Alluvial Deposits	42,34,38,43	2,506
Region 9	Matl. 4 - Deeper Marine Deposits	43,38,40,44	8,950
Region 10	Matl. 2 - Surficial Overburden Layer	35,45,46,36	2,250
Region 11	Matl. 3 - Shallow Alluvial Deposits	36,46,47,37	42,000

Region 12	Matl. 4 - Deeper Marine Deposits	37,47,48,39	1.5e+005
Region 13	Matl. 8 - Filter Sand	20,23,22,16,52,17,50,18,19	1.5978
Region 14	Matl. 5 - Soil Cement Armoring	23,24,33,22	1.6
Region 15	Matl. 2 - Surficial Overburden Layer	53,41,42,54	2,280
Region 16	Matl. 3 - Shallow Alluvial Deposits	42,43,55,54	42,560
Region 17	Matl. 4 - Deeper Marine Deposits	55,43,44,56	1.52e+005
Region 18	Matl. 3 - Shallow Alluvial Deposits	34,38,37,36,30,29,28,27,26,58,57,70,74,78	5,330
Region 19	Matl. 2 - Surficial Overburden Layer	59,58,26,21,12,5	176.7
Region 20	Matl. 8 - Filter Sand	60,59,5,63,64	44
Region 21	Matl. 6 - Fine Drainage Gravel	61,60,64,65	43
Region 22	Matl. 8 - Filter Sand	62,61,65,64,63,4,3,2	75
Region 23	Matl. 6 - Fine Drainage Gravel	67,66,60,61	1
Region 24	Matl. 9 Concrete Outfall Works	1,62,61,67	1
Region 25	Matl. 9 Concrete Outfall Works	68,72,57,58,59,60,66,69	16
Region 26	Matl. 6 - Fine Drainage Gravel	73,71,72,68	3.75
Region 27	Matl. 6 - Fine Drainage Gravel	76,75,71,73	11.25
Region 28	Matl. 8 - Filter Sand	71,72,57,70	3.75
Region 29	Matl. 8 - Filter Sand	71,70,74,75	11.25
Region 30	Matl. 8 - Filter Sand	77,34,78,79,80	6.075

Region 31	Matl. 8 - Filter Sand	79,78,74,75	0.3
Region 32	Matl. 6 - Fine Drainage Gravel	80,82,83,90,81,87	9.2
Region 33	Matl. 8 - Filter Sand	80,77,89,84,82	9.6
Region 34	Matl. 1 - Embankment Material	77,85,88,86,84,89	104
Region 35	Matl. 2 - Surficial Overburden Layer	41,42,34,77,85	134.25
Region 36	Matl. 6 - Fine Drainage Gravel	87,81,76,75,79	0.3
Region 37	Matl. 6 - Fine Drainage Gravel	80,87,79	0.825

Steady-State Seepage NP (LT SSS)

Report generated using GeoStudio 2012. Copyright © 1991-2013 GEO-SLOPE International Ltd.

File Information

Title: LOWP PIR Analysis Section H
Created By: Viessman, Michael W CIV USARMY CESAJ (US)
Last Edited By: Viessman, Michael W CIV USARMY CESAJ (US)
Revision Number: 552
File Version: 8.2
Tool Version: 8.12.3.7901
Date: 8/26/2018
Time: 9:33:16 PM
File Name: Section H EOC USP-DSP w toe drain.gsz
Directory: C:\Users\k3engmwv\Documents\LOWP\FY17-18 PIR Work\SEEP and SLOPEW Files\
Last Solved Date: 8/26/2018
Last Solved Time: 8:34:04 PM

Project Settings

Length(L) Units: feet
Time(t) Units: Seconds
Force(F) Units: lbf
Pressure(p) Units: psf
Mass(M) Units: lbs
Mass Flux Units: lbs/sec
Unit Weight of Water: 62.4 pcf
View: 2D
Element Thickness: 1

Analysis Settings

Steady-State Seepage NP (LT SSS)

Description: U/S NP pool, toe drain, PR wse at 18ft
Kind: SEEP/W
Method: Steady-State
Settings
    Include Air Flow: No
Control
    Apply Runoff: Yes
Convergence
    Maximum Number of Iterations: 1,000
    Minimum Pressure Head Difference: 0.005
    Significant Digits: 2

Max # of Reviews: 10
Hydraulic Under-Relaxation Criteria
Under-Relaxation Initial Rate: 1
Under-Relaxation Min. Rate: 0.1
Under-Relaxation Reduction Rate: 0.65
Under-Relaxation Iterations: 10
Equation Solver: Parallel Direct
Time
Starting Time: 0 sec
Duration: 0 sec
Ending Time: 0 sec

Materials

Matl. 1 - Embankment Material

Model: Saturated / Unsaturated
Hydraulic
K-Function: Matl. 1 Embankment Material
Ky'/Kx' Ratio: 0.25
Rotation: 0 °
Vol. WC. Function: Matl. 1 Embankment Fill from Borrow Areas

Matl. 2 - Surficial Overburden Layer

Model: Saturated / Unsaturated
Hydraulic
K-Function: Matl. 2 Surficial Overburden Layer
Ky'/Kx' Ratio: 0.1
Rotation: 0 °
Vol. WC. Function: Matl. 2 Surficial Overburden Layer

Matl. 3 - Shallow Alluvial Deposits

Model: Saturated / Unsaturated
Hydraulic
K-Function: Matl. 3 Shallow Alluvial Deposits
Ky'/Kx' Ratio: 0.1
Rotation: 0 °
Vol. WC. Function: Matl. 3 Shallow Alluvial Deposits

Matl. 4 - Deeper Marine Deposits

Model: Saturated / Unsaturated
Hydraulic
K-Function: Matl. 4 Deeper Marine Deposits
Ky'/Kx' Ratio: 0.1
Rotation: 0 °
Vol. WC. Function: Matl. 4 Deeper Marine Deposits

Matl. 5 - Soil Cement Armoring

Model: Saturated / Unsaturated
Hydraulic
K-Function: Matl. 5 Soil Cement Armoring
Ky'/Kx' Ratio: 1
Rotation: 0 °
Vol. WC. Function: Matl. 5 Soil Cement Armoring

Matl. 6 - Fine Drainage Gravel

Model: Saturated / Unsaturated
Hydraulic
K-Function: Matl. 6 Fine Drainage Gravel
Ky'/Kx' Ratio: 1
Rotation: 0 °
Vol. WC. Function: Mat. 6 Fine Drainage Gravel (No 89)

Matl. 8 - Filter Sand

Model: Saturated / Unsaturated
Hydraulic
K-Function: Matl. 8 Filter Sand
Ky'/Kx' Ratio: 1
Rotation: 0 °
Vol. WC. Function: Matl. 8 Filter Sand (C33)

Matl. 9 Concrete Outfall Works

Model: Saturated Only
Hydraulic
K-Sat: 3.28e-010 ft/sec
Ky'/Kx' Ratio: 1
Rotation: 0 °
Volumetric Water Content: 0.3 ft^3/ft^3
Mv: 1e-008 /psf

Boundary Conditions

K-05 WAF Normal Pool at Elev. 23ft

Type: Head (H) 23
Review: No

PR at Elev. 18ft

Type: Head (H) 18
Review: No

Drainage

Type: Total Flux (Q) 0
Review: Yes

Flux Sections

Flux Section 1

Coordinates

Coordinate: (-56.368089, 17.11908) ft
Coordinate: (-56.359991, 15.897243) ft

Flux Section 2

Coordinates

Coordinate: (-100.27362, 18.818898) ft
Coordinate: (-86.017717, 14.05315) ft
Coordinate: (-65.383858, 14.059055) ft

Flux Section 3

Coordinates

Coordinate: (-11.352061, 28.166901) ft
Coordinate: (-11.307284, 14.896151) ft

Flux Section 4

Coordinates

Coordinate: (-11.307284, 14.851374) ft
Coordinate: (-55.502072, 14.873763) ft

Flux Section 5

Coordinates

Coordinate: (-0.349869, 33.216015) ft
Coordinate: (-0.361475, -114.73943) ft

Flux Section 6

Coordinates

Coordinate: (-109.10947, 18.913159) ft
Coordinate: (-109.07273, -114.73608) ft

K Functions

Matl. 1 Embankment Material

Model: Hyd K Data Point Function
Function: X-Conductivity vs. Pore-Water Pressure
Curve Fit to Data: 100 %
Segment Curvature: 36 %
K-Saturation: 0.000131
Data Points: Matric Suction (psf), X-Conductivity (ft/sec)
Data Point: (0.01, 0.000131)
Data Point: (0.018329807, 0.00013099927)
Data Point: (0.033598183, 0.00013099852)
Data Point: (0.061584821, 0.00013099772)

Data Point: (0.11288379, 0.00013099684)
Data Point: (0.20691381, 0.00013099581)
Data Point: (0.37926902, 0.0001309945)
Data Point: (0.6951928, 0.00013099268)
Data Point: (1.274275, 0.00013098992)
Data Point: (2.3357215, 0.00013098549)
Data Point: (4.2813324, 0.0001309777)
Data Point: (7.8475997, 0.00013096339)
Data Point: (14.384499, 0.00013094955)
Data Point: (26.366509, 0.00013089452)
Data Point: (48.329302, 0.00013043835)
Data Point: (88.586679, 0.00012910123)
Data Point: (162.37767, 5.664247e-005)
Data Point: (297.63514, 2.5159921e-006)
Data Point: (545.55948, 4.7485927e-008)
Data Point: (1,000, 1.7886028e-009)

Estimation Properties

Hyd. K-Function Estimation Method: Fredlund-Xing Function
Volume Water Content Function: Matl. 1 Embankment Fill from Borrow Areas
Hydraulic K Sat: 0.000131 ft/sec
Residual Water Content: 0.0495 ft^3/ft^3
Maximum: 1,000
Minimum: 0.01
Num. Points: 20

Matl. 4 Deeper Marine Deposits

Model: Hyd K Data Point Function
Function: X-Conductivity vs. Pore-Water Pressure
Curve Fit to Data: 100 %
Segment Curvature: 44 %
K-Saturation: 0.000984
Data Points: Matric Suction (psf), X-Conductivity (ft/sec)
Data Point: (0.01, 0.000984)
Data Point: (0.018329807, 0.00098398585)
Data Point: (0.033598183, 0.00098397151)
Data Point: (0.061584821, 0.00098395679)
Data Point: (0.11288379, 0.00098394139)
Data Point: (0.20691381, 0.00098392476)
Data Point: (0.37926902, 0.00098390584)
Data Point: (0.6951928, 0.00098388274)
Data Point: (1.274275, 0.00098385199)
Data Point: (2.3357215, 0.0009838074)
Data Point: (4.2813324, 0.00098373618)
Data Point: (7.8475997, 0.00098361453)
Data Point: (14.384499, 0.0009834543)
Data Point: (26.366509, 0.00098304118)
Data Point: (48.329302, 0.00098089274)
Data Point: (88.586679, 0.00098804841)

Data Point: (162.37767, 0.00089693201)
Data Point: (297.63514, 0.00029836287)
Data Point: (545.55948, 5.5741791e-006)
Data Point: (1,000, 8.8545842e-008)

Estimation Properties

Hyd. K-Function Estimation Method: Fredlund-Xing Function
Volume Water Content Function: Matl. 4 Deeper Marine Deposits
Hydraulic K Sat: 0.000984 ft/sec
Residual Water Content: 0.03 ft^3/ft^3
Maximum: 1,000
Minimum: 0.01
Num. Points: 20

Matl. 6 Fine Drainage Gravel

Model: Hyd K Data Point Function
Function: X-Conductivity vs. Pore-Water Pressure

Curve Fit to Data: 100 %
Segment Curvature: 40 %

K-Saturation: 0.02315
Data Points: Matric Suction (psf), X-Conductivity (ft/sec)

Data Point: (0.01, 0.02315)
Data Point: (0.018329807, 0.023149999)
Data Point: (0.033598183, 0.023149997)
Data Point: (0.061584821, 0.023149994)
Data Point: (0.11288379, 0.023149984)
Data Point: (0.20691381, 0.023149981)
Data Point: (0.37926902, 0.023150055)
Data Point: (0.6951928, 0.023149315)
Data Point: (1.274275, 0.02314882)
Data Point: (2.3357215, 0.023163455)
Data Point: (4.2813324, 0.02041826)
Data Point: (7.8475997, 0.0039249052)
Data Point: (14.384499, 6.6024733e-005)
Data Point: (26.366509, 7.000732e-007)
Data Point: (48.329302, 2.0374523e-008)
Data Point: (88.586679, 3.5541328e-009)
Data Point: (162.37767, 7.5581773e-010)
Data Point: (297.63514, 1.5822386e-010)
Data Point: (545.55948, 2.6567478e-011)
Data Point: (1,000, 2.4617797e-012)

Estimation Properties

Hyd. K-Function Estimation Method: Fredlund-Xing Function
Volume Water Content Function: Mat. 6 Fine Drainage Gravel (No 89)
Hydraulic K Sat: 0.02315 ft/sec
Residual Water Content: 0.042 ft^3/ft^3
Maximum: 1,000
Minimum: 0.01
Num. Points: 20

Matl. 2 Surficial Overburden Layer

Model: Hyd K Data Point Function
Function: X-Conductivity vs. Pore-Water Pressure
Curve Fit to Data: 100 %
Segment Curvature: 36 %
K-Saturation: 0.00026
Data Points: Matric Suction (psf), X-Conductivity (ft/sec)
Data Point: (0.01, 0.00026)
Data Point: (0.018329807, 0.00025999835)
Data Point: (0.033598183, 0.00025999664)
Data Point: (0.061584821, 0.00025999485)
Data Point: (0.11288379, 0.00025999288)
Data Point: (0.20691381, 0.00025999062)
Data Point: (0.37926902, 0.00025998779)
Data Point: (0.6951928, 0.00025998393)
Data Point: (1.274275, 0.00025997819)
Data Point: (2.3357215, 0.00025996907)
Data Point: (4.2813324, 0.00025995329)
Data Point: (7.8475997, 0.00025992467)
Data Point: (14.384499, 0.00025989276)
Data Point: (26.366509, 0.00025978642)
Data Point: (48.329302, 0.00025903344)
Data Point: (88.586679, 0.0002586222)
Data Point: (162.37767, 0.00013432217)
Data Point: (297.63514, 8.1547435e-006)
Data Point: (545.55948, 1.3663567e-007)
Data Point: (1,000, 4.5608744e-009)
Estimation Properties
Hyd. K-Function Estimation Method: Fredlund-Xing Function
Volume Water Content Function: Matl. 2 Surficial Overburden Layer
Hydraulic K Sat: 0.00026 ft/sec
Residual Water Content: 0.0495 ft^3/ft^3
Maximum: 1,000
Minimum: 0.01
Num. Points: 20

Matl. 3 Shallow Alluvial Deposits

Model: Hyd K Data Point Function
Function: X-Conductivity vs. Pore-Water Pressure
Curve Fit to Data: 100 %
Segment Curvature: 36 %
K-Saturation: 0.00174
Data Points: Matric Suction (psf), X-Conductivity (ft/sec)
Data Point: (0.01, 0.00174)
Data Point: (0.018329807, 0.0017399903)
Data Point: (0.033598183, 0.0017399803)
Data Point: (0.061584821, 0.0017399698)

Data Point: (0.11288379, 0.0017399581)
Data Point: (0.20691381, 0.0017399444)
Data Point: (0.37926902, 0.0017399269)
Data Point: (0.6951928, 0.0017399027)
Data Point: (1.274275, 0.0017398661)
Data Point: (2.3357215, 0.0017398072)
Data Point: (4.2813324, 0.0017397038)
Data Point: (7.8475997, 0.0017395137)
Data Point: (14.384499, 0.0017393299)
Data Point: (26.366509, 0.001738599)
Data Point: (48.329302, 0.0017325399)
Data Point: (88.586679, 0.0017147796)
Data Point: (162.37767, 0.00075235037)
Data Point: (297.63514, 3.3418521e-005)
Data Point: (545.55948, 6.307291e-007)
Data Point: (1,000, 2.3757014e-008)

Estimation Properties
Hyd. K-Function Estimation Method: Fredlund-Xing Function
Volume Water Content Function: Matl. 3 Shallow Alluvial Deposits
Hydraulic K Sat: 0.00174 ft/sec
Residual Water Content: 0.0495 ft^3/ft^3
Maximum: 1,000
Minimum: 0.01
Num. Points: 20

Matl. 5 Soil Cement Armoring

Model: Hyd K Data Point Function
Function: X-Conductivity vs. Pore-Water Pressure
Curve Fit to Data: 100 %
Segment Curvature: 44 %
K-Saturation: 1.31e-005
Data Points: Matric Suction (psf), X-Conductivity (ft/sec)
Data Point: (0.01, 1.31e-005)
Data Point: (0.018329807, 1.3099927e-005)
Data Point: (0.033598183, 1.3099852e-005)
Data Point: (0.061584821, 1.3099772e-005)
Data Point: (0.11288379, 1.3099684e-005)
Data Point: (0.20691381, 1.3099581e-005)
Data Point: (0.37926902, 1.309945e-005)
Data Point: (0.6951928, 1.3099268e-005)
Data Point: (1.274275, 1.3098992e-005)
Data Point: (2.3357215, 1.3098549e-005)
Data Point: (4.2813324, 1.309777e-005)
Data Point: (7.8475997, 1.3096339e-005)
Data Point: (14.384499, 1.3094955e-005)
Data Point: (26.366509, 1.3089452e-005)
Data Point: (48.329302, 1.3043835e-005)
Data Point: (88.586679, 1.2910123e-005)

Data Point: (162.37767, 5.664247e-006)
Data Point: (297.63514, 2.5159921e-007)
Data Point: (545.55948, 4.7485927e-009)
Data Point: (1,000, 1.7886028e-010)

Estimation Properties

Hyd. K-Function Estimation Method: Fredlund-Xing Function
Volume Water Content Function: Matl. 5 Soil Cement Armoring
Hydraulic K Sat: 1.31e-005 ft/sec
Residual Water Content: 0.03 ft^3/ft^3
Maximum: 1,000
Minimum: 0.01
Num. Points: 20

Matl. 8 Filter Sand

Model: Hyd K Data Point Function
Function: X-Conductivity vs. Pore-Water Pressure

Curve Fit to Data: 100 %
Segment Curvature: 44 %

K-Saturation: 0.000925
Data Points: Matric Suction (psf), X-Conductivity (ft/sec)

Data Point: (0.01, 0.000925)
Data Point: (0.018329807, 0.00092499993)
Data Point: (0.033598183, 0.00092499981)
Data Point: (0.061584821, 0.0009249996)
Data Point: (0.11288379, 0.00092499919)
Data Point: (0.20691381, 0.00092499854)
Data Point: (0.37926902, 0.00092499785)
Data Point: (0.6951928, 0.00092499117)
Data Point: (1.274275, 0.00092498427)
Data Point: (2.3357215, 0.00092515575)
Data Point: (4.2813324, 0.00092444336)
Data Point: (7.8475997, 0.00092025484)
Data Point: (14.384499, 0.00086768248)
Data Point: (26.366509, 0.00022215817)
Data Point: (48.329302, 5.6149022e-006)
Data Point: (88.586679, 9.4931606e-008)
Data Point: (162.37767, 4.4270536e-009)
Data Point: (297.63514, 6.3580973e-010)
Data Point: (545.55948, 1.1244323e-010)
Data Point: (1,000, 1.0762229e-011)

Estimation Properties

Hyd. K-Function Estimation Method: Fredlund-Xing Function
Volume Water Content Function: Matl. 8 Filter Sand (C33)
Hydraulic K Sat: 0.000925 ft/sec
Residual Water Content: 0.03 ft^3/ft^3
Maximum: 1,000
Minimum: 0.01
Num. Points: 20

Vol. Water Content Functions

Matl. 3 Shallow Alluvial Deposits

Model: Vol WC Data Point Function
Function: Vol. Water Content vs. Pore-Water Pressure
Mv: 2.5e-006 /psf
Saturated Water Content: 0.30020276 ft^3/ft^3
Residual Water Content: 0.030020276 ft^3/ft^3
Curve Fit to Data: 100 %
Segment Curvature: 40 %
Porosity: 0.30020276
Data Points: Matric Suction (psf), Vol. Water Content (ft^3/ft^3)
Data Point: (0.01, 0.29987196)
Data Point: (0.018329807, 0.29987196)
Data Point: (0.033598183, 0.29987196)
Data Point: (0.061584821, 0.29987196)
Data Point: (0.11288379, 0.29987196)
Data Point: (0.20691381, 0.29987196)
Data Point: (0.37926902, 0.29987196)
Data Point: (0.6951928, 0.29987196)
Data Point: (1.274275, 0.29987196)
Data Point: (2.3357215, 0.29987196)
Data Point: (4.2813324, 0.29987196)
Data Point: (7.8475997, 0.29987196)
Data Point: (14.384499, 0.29987196)
Data Point: (26.366509, 0.29987196)
Data Point: (48.329302, 0.29987196)
Data Point: (88.586679, 0.29667682)
Data Point: (162.37767, 0.20150036)
Data Point: (297.63514, 0.085811521)
Data Point: (545.55948, 0.049379583)
Data Point: (1,000, 0.039446735)
Estimation Properties
Vol. WC Estimation Method: Grain Size Function
Saturated Water Content: 0.3 ft^3/ft^3
Sample Material: Clay
Liquid Limit: 0 %
Diameter at 10% passing: 0.07000000000000001
Diameter at 60% passing: 0.2
Maximum: 1,000
Minimum: 0.01
Num. Points: 20

Matl. 1 Embankment Fill from Borrow Areas

Model: Vol WC Data Point Function
Function: Vol. Water Content vs. Pore-Water Pressure
Mv: 2.5e-006 /psf

Saturated Water Content: 0.30020276 ft^3/ft^3
Residual Water Content: 0.030020276 ft^3/ft^3
Curve Fit to Data: 100 %
Segment Curvature: 40 %
Porosity: 0.30020276
Data Points: Matric Suction (psf), Vol. Water Content (ft^3/ft^3)
Data Point: (0.01, 0.29987196)
Data Point: (0.018329807, 0.29987196)
Data Point: (0.033598183, 0.29987196)
Data Point: (0.061584821, 0.29987196)
Data Point: (0.11288379, 0.29987196)
Data Point: (0.20691381, 0.29987196)
Data Point: (0.37926902, 0.29987196)
Data Point: (0.6951928, 0.29987196)
Data Point: (1.274275, 0.29987196)
Data Point: (2.3357215, 0.29987196)
Data Point: (4.2813324, 0.29987196)
Data Point: (7.8475997, 0.29987196)
Data Point: (14.384499, 0.29987196)
Data Point: (26.366509, 0.29987196)
Data Point: (48.329302, 0.29987196)
Data Point: (88.586679, 0.29667682)
Data Point: (162.37767, 0.20150036)
Data Point: (297.63514, 0.085811521)
Data Point: (545.55948, 0.049379583)
Data Point: (1,000, 0.039446735)
Estimation Properties
Vol. WC Estimation Method: Grain Size Function
Saturated Water Content: 0.3 ft^3/ft^3
Sample Material: Clay
Liquid Limit: 0 %
Diameter at 10% passing: 0.07000000000000001
Diameter at 60% passing: 0.2
Maximum: 1,000
Minimum: 0.01
Num. Points: 20

Matl. 2 Surficial Overburden Layer

Model: Vol WC Data Point Function
Function: Vol. Water Content vs. Pore-Water Pressure
Mv: 2.5e-006 /psf
Saturated Water Content: 0.30132774 ft^3/ft^3
Residual Water Content: 0.030132774 ft^3/ft^3
Curve Fit to Data: 100 %
Segment Curvature: 40 %
Porosity: 0.30132774
Data Points: Matric Suction (psf), Vol. Water Content (ft^3/ft^3)
Data Point: (0.01, 0.30110223)

Data Point: (0.018329807, 0.30110223)
Data Point: (0.033598183, 0.30110223)
Data Point: (0.061584821, 0.30110223)
Data Point: (0.11288379, 0.30110223)
Data Point: (0.20691381, 0.30110223)
Data Point: (0.37926902, 0.30110223)
Data Point: (0.6951928, 0.30110223)
Data Point: (1.274275, 0.30110223)
Data Point: (2.3357215, 0.30110223)
Data Point: (4.2813324, 0.30110223)
Data Point: (7.8475997, 0.30110223)
Data Point: (14.384499, 0.30110223)
Data Point: (26.366509, 0.30110223)
Data Point: (48.329302, 0.30110223)
Data Point: (88.586679, 0.29938489)
Data Point: (162.37767, 0.21986255)
Data Point: (297.63514, 0.094851578)
Data Point: (545.55948, 0.051777012)
Data Point: (1,000, 0.040605935)

Estimation Properties
Vol. WC Estimation Method: Grain Size Function
Saturated Water Content: 0.3 ft^3/ft^3
Sample Material: Clay
Liquid Limit: 0 %
Diameter at 10% passing: 0.07000000000000001
Diameter at 60% passing: 0.18
Maximum: 1,000
Minimum: 0.01
Num. Points: 20

Matl. 8 Filter Sand (C33)

Model: Vol WC Data Point Function
Function: Vol. Water Content vs. Pore-Water Pressure
Mv: 8e-007 /psf
Saturated Water Content: 0.30081752 ft^3/ft^3
Residual Water Content: 0.030081752 ft^3/ft^3
Curve Fit to Data: 100 %
Segment Curvature: 48 %
Porosity: 0.30081752
Data Points: Matric Suction (psf), Vol. Water Content (ft^3/ft^3)
Data Point: (0.01, 0.30028388)
Data Point: (0.018329807, 0.30028388)
Data Point: (0.033598183, 0.30028388)
Data Point: (0.061584821, 0.30028388)
Data Point: (0.11288379, 0.30028388)
Data Point: (0.20691381, 0.30028388)
Data Point: (0.37926902, 0.30028388)
Data Point: (0.6951928, 0.30028388)

Data Point: (1.274275, 0.30028388)
Data Point: (2.3357215, 0.30028388)
Data Point: (4.2813324, 0.30028388)
Data Point: (7.8475997, 0.30028388)
Data Point: (14.384499, 0.28112842)
Data Point: (26.366509, 0.15065712)
Data Point: (48.329302, 0.048430554)
Data Point: (88.586679, 0.021674388)
Data Point: (162.37767, 0.016081301)
Data Point: (297.63514, 0.013674367)
Data Point: (545.55948, 0.011770874)
Data Point: (1,000, 0.010084825)

Estimation Properties

Vol. WC Estimation Method: Grain Size Function
Saturated Water Content: 0.3 ft^3/ft^3
Sample Material: Gravel
Liquid Limit: 0 %
Diameter at 10% passing: 0.38
Diameter at 60% passing: 1.6
Maximum: 1,000
Minimum: 0.01
Num. Points: 20

Mat. 6 Fine Drainage Gravel (No 89)

Model: Vol WC Data Point Function
Function: Vol. Water Content vs. Pore-Water Pressure

Mv: 4e-007 /psf
Saturated Water Content: 0.21947752 ft^3/ft^3
Residual Water Content: 0.021947752 ft^3/ft^3
Curve Fit to Data: 100 %
Segment Curvature: 48 %

Porosity: 0.21947752
Data Points: Matric Suction (psf), Vol. Water Content (ft^3/ft^3)

Data Point: (0.01, 0.21916427)
Data Point: (0.018329807, 0.21916427)
Data Point: (0.033598183, 0.21916427)
Data Point: (0.061584821, 0.21916427)
Data Point: (0.11288379, 0.21916427)
Data Point: (0.20691381, 0.21916427)
Data Point: (0.37926902, 0.21916427)
Data Point: (0.6951928, 0.21916427)
Data Point: (1.274275, 0.21916427)
Data Point: (2.3357215, 0.21916427)
Data Point: (4.2813324, 0.20182012)
Data Point: (7.8475997, 0.090949254)
Data Point: (14.384499, 0.021737158)
Data Point: (26.366509, 0.0080845337)
Data Point: (48.329302, 0.0057554944)

Data Point: (88.586679, 0.0048689464)
Data Point: (162.37767, 0.0041947283)
Data Point: (297.63514, 0.0036057207)
Data Point: (545.55948, 0.0030872724)
Data Point: (1,000, 0.002632805)
Estimation Properties
Vol. WC Estimation Method: Grain Size Function
Saturated Water Content: 0.21875 ft^3/ft^3
Sample Material: Clay
Liquid Limit: 0 %
Diameter at 10% passing: 3.5
Diameter at 60% passing: 7.1
Maximum: 1,000
Minimum: 0.01
Num. Points: 20

Matl. 4 Deeper Marine Deposits

Model: Vol WC Data Point Function
Function: Vol. Water Content vs. Pore-Water Pressure
Mv: 2.5e-006 /psf
Saturated Water Content: 0.30154597 ft^3/ft^3
Residual Water Content: 0.030154597 ft^3/ft^3
Curve Fit to Data: 100 %
Segment Curvature: 40 %
Porosity: 0.30154597
Data Points: Matric Suction (psf), Vol. Water Content (ft^3/ft^3)
Data Point: (0.01, 0.30100508)
Data Point: (0.018329807, 0.30100508)
Data Point: (0.033598183, 0.30100508)
Data Point: (0.061584821, 0.30100508)
Data Point: (0.11288379, 0.30100508)
Data Point: (0.20691381, 0.30100508)
Data Point: (0.37926902, 0.30100508)
Data Point: (0.6951928, 0.30100508)
Data Point: (1.274275, 0.30100508)
Data Point: (2.3357215, 0.30100508)
Data Point: (4.2813324, 0.30100508)
Data Point: (7.8475997, 0.30100508)
Data Point: (14.384499, 0.30100508)
Data Point: (26.366509, 0.30100508)
Data Point: (48.329302, 0.30100508)
Data Point: (88.586679, 0.30100508)
Data Point: (162.37767, 0.2887592)
Data Point: (297.63514, 0.17412515)
Data Point: (545.55948, 0.076942285)
Data Point: (1,000, 0.051397358)
Estimation Properties
Vol. WC Estimation Method: Grain Size Function

Saturated Water Content: 0.3 ft^3/ft^3
Sample Material: Clay
Liquid Limit: 0 %
Diameter at 10% passing: 0.06
Diameter at 60% passing: 0.11
Maximum: 1,000
Minimum: 0.01
Num. Points: 20

Matl. 5 Soil Cement Armoring

Model: Vol WC Data Point Function
Function: Vol. Water Content vs. Pore-Water Pressure
Mv: 2.5e-006 /psf
Saturated Water Content: 0.30020276 ft^3/ft^3
Residual Water Content: 0.030020276 ft^3/ft^3
Curve Fit to Data: 100 %
Segment Curvature: 40 %
Porosity: 0.30020276
Data Points: Matric Suction (psf), Vol. Water Content (ft^3/ft^3)
Data Point: (0.01, 0.29987196)
Data Point: (0.018329807, 0.29987196)
Data Point: (0.033598183, 0.29987196)
Data Point: (0.061584821, 0.29987196)
Data Point: (0.11288379, 0.29987196)
Data Point: (0.20691381, 0.29987196)
Data Point: (0.37926902, 0.29987196)
Data Point: (0.6951928, 0.29987196)
Data Point: (1.274275, 0.29987196)
Data Point: (2.3357215, 0.29987196)
Data Point: (4.2813324, 0.29987196)
Data Point: (7.8475997, 0.29987196)
Data Point: (14.384499, 0.29987196)
Data Point: (26.366509, 0.29987196)
Data Point: (48.329302, 0.29987196)
Data Point: (88.586679, 0.29667682)
Data Point: (162.37767, 0.20150036)
Data Point: (297.63514, 0.085811521)
Data Point: (545.55948, 0.049379583)
Data Point: (1,000, 0.039446735)
Estimation Properties
Vol. WC Estimation Method: Grain Size Function
Saturated Water Content: 0.3 ft^3/ft^3
Sample Material: Clay
Liquid Limit: 0 %
Diameter at 10% passing: 0.07000000000000001
Diameter at 60% passing: 0.2
Maximum: 1,000
Minimum: 0.01

Num. Points: 20

Points

	X (ft)	Y (ft)
Point 1	-56.5	18
Point 2	-14.5	18
Point 3	-14.5	28
Point 4	-11.5	28
Point 5	-11.5	15
Point 6	-7	34.5
Point 7	-7	33.4
Point 8	6.8	33.4
Point 9	14	31
Point 10	13.7	30.1
Point 11	51.6	17.5
Point 12	54.2	15
Point 13	55.0033	16.4828
Point 14	54.9	16.4
Point 15	54.8636	16.2065
Point 16	55.097	16.0075
Point 17	55.3031	16.0832
Point 18	55.3561	16.2916
Point 19	55.3	16.4
Point 20	55.1797	16.4906
Point 21	62.3	15
Point 22	59.3	16
Point 23	57.8	16.5
Point 24	61	16.5
Point 25	7	34.5
Point 26	62.3	13.5
Point 27	70.3	13.5
Point 28	70.3	11.5
Point 29	72.3	11.5
Point 30	72.3	13.5
Point 31	72.3	15

Point 32	65.5	15
Point 33	62.5	16
Point 34	-90.5	13.5
Point 35	100	15
Point 36	100	13.5
Point 37	100	-14.5
Point 38	-90.5	-14.5
Point 39	100	-114.5
Point 40	-90.5	-114.5
Point 41	-180	15
Point 42	-180	13.5
Point 43	-180	-14.5
Point 44	-180	-114.5
Point 45	1,600	15
Point 46	1,600	13.5
Point 47	1,600	-14.5
Point 48	1,600	-114.5
Point 49	41.5	23
Point 50	55.3546	16.1839
Point 51	54.9487	16.066
Point 52	55.2227	16.0254
Point 53	-1,700	15
Point 54	-1,700	13.5
Point 55	-1,700	-14.5
Point 56	-1,700	-114.5
Point 57	-65.5	13.5
Point 58	-55.5	13.5
Point 59	-55.5	15
Point 60	-55.5	16
Point 61	-55.5	17
Point 62	-55.5	18
Point 63	-11.5	16
Point 64	-12.5	16
Point 65	-12.5	17
Point 66	-56.5	16
Point 67	-56.5	17

Point 68	-65.5	15
Point 69	-56.5	15
Point 70	-70.5	13.5
Point 71	-70.5	14.25
Point 72	-65.5	14.25
Point 73	-70.5	15
Point 74	-85.5	13.5
Point 75	-85.5	14.25
Point 76	-85.5	15
Point 77	-90.5	15
Point 78	-85.9	13.5
Point 79	-85.9	14.25
Point 80	-88.1	15
Point 81	-85.8	15
Point 82	-100.1	19
Point 83	-97.8	19
Point 84	-102.5	19
Point 85	-128.5	15
Point 86	-116.5	19
Point 87	-85.9	15
Point 88	-119.5	18
Point 89	-99.5	18
Point 90	-94.8	18
Point 91	29.5	27

Lines

	Start Point	End Point	Hydraulic Boundary
Line 1	2	3	
Line 2	3	4	
Line 3	1	6	Drainage
Line 4	6	7	
Line 5	7	8	
Line 6	8	9	
Line 7	9	10	
Line 8	10	11	

Line 9	11	12	
Line 10	12	5	
Line 11	13	14	
Line 12	14	15	
Line 13	18	19	
Line 14	19	20	
Line 15	20	13	
Line 16	12	21	
Line 17	21	22	
Line 18	22	16	
Line 19	20	23	
Line 20	23	9	
Line 21	23	24	
Line 22	25	6	
Line 23	21	26	
Line 24	26	27	
Line 25	27	28	
Line 26	28	29	
Line 27	29	30	
Line 28	30	31	
Line 29	31	32	K-05 WAF Normal Pool at Elev. 23ft
Line 30	32	33	K-05 WAF Normal Pool at Elev. 23ft
Line 31	33	22	
Line 32	31	35	K-05 WAF Normal Pool at Elev. 23ft
Line 33	35	36	
Line 34	36	30	
Line 35	36	37	
Line 36	37	38	
Line 37	38	34	
Line 38	37	39	
Line 39	39	40	
Line 40	40	38	
Line 41	34	42	
Line 42	42	41	
Line 43	38	43	
Line 44	43	42	

Line 45	40	44	
Line 46	44	43	
Line 47	35	45	K-05 WAF Normal Pool at Elev. 23ft
Line 48	45	46	
Line 49	46	36	
Line 50	46	47	
Line 51	47	37	
Line 52	47	48	
Line 53	48	39	
Line 54	24	49	K-05 WAF Normal Pool at Elev. 23ft
Line 55	23	22	
Line 56	24	33	K-05 WAF Normal Pool at Elev. 23ft
Line 57	17	50	
Line 58	50	18	
Line 59	15	51	
Line 60	51	16	
Line 61	16	52	
Line 62	52	17	
Line 63	53	41	PR at Elev. 18ft
Line 64	42	54	
Line 65	54	53	
Line 66	43	55	
Line 67	55	54	
Line 68	44	56	
Line 69	56	55	
Line 70	26	58	
Line 71	1	62	
Line 72	62	2	
Line 73	58	59	
Line 74	59	60	
Line 75	60	61	
Line 76	61	62	
Line 77	5	59	
Line 78	4	63	
Line 79	63	5	
Line 80	63	64	

Line 81	64	60	
Line 82	64	65	
Line 83	60	66	
Line 84	67	66	Drainage
Line 85	61	67	
Line 86	67	1	
Line 87	58	57	
Line 88	66	69	
Line 89	69	68	
Line 90	57	70	
Line 91	68	72	
Line 92	72	71	
Line 93	73	71	
Line 94	68	73	Drainage
Line 95	70	74	
Line 96	75	76	
Line 97	71	75	
Line 98	73	76	Drainage
Line 99	72	57	
Line 100	70	71	
Line 101	74	75	
Line 102	74	78	
Line 103	78	34	
Line 104	77	34	
Line 105	78	79	
Line 106	79	80	
Line 107	80	77	
Line 108	75	79	
Line 109	80	82	
Line 110	82	83	
Line 111	84	82	
Line 112	77	85	
Line 113	86	84	
Line 114	85	41	PR at Elev. 18ft
Line 115	81	87	
Line 116	87	80	

Line 117	81	76	Drainage
Line 118	79	87	
Line 119	85	88	PR at Elev. 18ft
Line 120	88	86	
Line 121	77	89	
Line 122	89	84	
Line 123	83	90	
Line 124	90	81	Drainage
Line 125	65	61	
Line 126	49	91	
Line 127	91	25	

Regions

	Material	Points	Area (ft^2)
Region 1	Matl. 1 - Embankment Material	1,6,7,8,9,10,11,12,5,63,4,3,2,62	1,101.7
Region 2		13,14,15,51,16,52,17,50,18,19,20	0.18474
Region 3	Matl. 8 - Filter Sand	9,10,11,12,21,22,16,51,15,14,13,20,23	52.737
Region 4	Matl. 5 - Soil Cement Armoring	6,7,8,9,23,24,49,91,25	74.19
Region 5	Matl. 5 - Soil Cement Armoring	22,21,26,27,28,29,30,31,32,33	22.2
Region 6	Matl. 2 - Surficial Overburden Layer	31,35,36,30	41.55
Region 7	Matl. 4 - Deeper Marine Deposits	38,37,39,40	19,050
Region 8	Matl. 3 - Shallow Alluvial Deposits	42,34,38,43	2,506
Region 9	Matl. 4 - Deeper Marine Deposits	43,38,40,44	8,950
Region 10	Matl. 2 - Surficial Overburden Layer	35,45,46,36	2,250
Region 11	Matl. 3 - Shallow Alluvial Deposits	36,46,47,37	42,000

Region 12	Matl. 4 - Deeper Marine Deposits	37,47,48,39	1.5e+005
Region 13	Matl. 8 - Filter Sand	20,23,22,16,52,17,50,18,19	1.5978
Region 14	Matl. 5 - Soil Cement Armoring	23,24,33,22	1.6
Region 15	Matl. 2 - Surficial Overburden Layer	53,41,42,54	2,280
Region 16	Matl. 3 - Shallow Alluvial Deposits	42,43,55,54	42,560
Region 17	Matl. 4 - Deeper Marine Deposits	55,43,44,56	1.52e+005
Region 18	Matl. 3 - Shallow Alluvial Deposits	34,38,37,36,30,29,28,27,26,58,57,70,74,78	5,330
Region 19	Matl. 2 - Surficial Overburden Layer	59,58,26,21,12,5	176.7
Region 20	Matl. 8 - Filter Sand	60,59,5,63,64	44
Region 21	Matl. 6 - Fine Drainage Gravel	61,60,64,65	43
Region 22	Matl. 8 - Filter Sand	62,61,65,64,63,4,3,2	75
Region 23	Matl. 6 - Fine Drainage Gravel	67,66,60,61	1
Region 24	Matl. 9 Concrete Outfall Works	1,62,61,67	1
Region 25	Matl. 9 Concrete Outfall Works	68,72,57,58,59,60,66,69	16
Region 26	Matl. 6 - Fine Drainage Gravel	73,71,72,68	3.75
Region 27	Matl. 6 - Fine Drainage Gravel	76,75,71,73	11.25
Region 28	Matl. 8 - Filter Sand	71,72,57,70	3.75
Region 29	Matl. 8 - Filter Sand	71,70,74,75	11.25
Region 30	Matl. 8 - Filter Sand	77,34,78,79,80	6.075

Region 31	Matl. 8 - Filter Sand	79,78,74,75	0.3
Region 32	Matl. 6 - Fine Drainage Gravel	80,82,83,90,81,87	9.2
Region 33	Matl. 8 - Filter Sand	80,77,89,84,82	9.6
Region 34	Matl. 1 - Embankment Material	77,85,88,86,84,89	104
Region 35	Matl. 2 - Surficial Overburden Layer	41,42,34,77,85	134.25
Region 36	Matl. 6 - Fine Drainage Gravel	87,81,76,75,79	0.3
Region 37	Matl. 6 - Fine Drainage Gravel	80,87,79	0.825

Steady-State Seepage MSP (LT SSS)

Report generated using GeoStudio 2012. Copyright © 1991-2013 GEO-SLOPE International Ltd.

File Information

Title: LOWP PIR Analysis Section H
Created By: Viessman, Michael W CIV USARMY CESAJ (US)
Last Edited By: Viessman, Michael W CIV USARMY CESAJ (US)
Revision Number: 555
File Version: 8.2
Tool Version: 8.12.3.7901
Date: 8/26/2018
Time: 9:37:19 PM
File Name: Section H EOC USP-DSP w toe drain.gsz
Directory: C:\Users\k3engmwv\Documents\LOWP\FY17-18 PIR Work\SEEP and SLOPEW Files\
Last Solved Date: 8/26/2018
Last Solved Time: 8:38:14 PM

Project Settings

Length(L) Units: feet
Time(t) Units: Seconds
Force(F) Units: lbf
Pressure(p) Units: psf
Mass(M) Units: lbs
Mass Flux Units: lbs/sec
Unit Weight of Water: 62.4 pcf
View: 2D
Element Thickness: 1

Analysis Settings

Steady-State Seepage MSP (LT SSS)

Description: U/S MSP pool, toe drain, PR wse at 18ft
Kind: SEEP/W
Method: Steady-State
Settings
    Include Air Flow: No
Control
    Apply Runoff: Yes
Convergence
    Maximum Number of Iterations: 1,000
    Minimum Pressure Head Difference: 0.005
    Significant Digits: 2

Max # of Reviews: 10
Hydraulic Under-Relaxation Criteria
Under-Relaxation Initial Rate: 1
Under-Relaxation Min. Rate: 0.1
Under-Relaxation Reduction Rate: 0.65
Under-Relaxation Iterations: 10
Equation Solver: Parallel Direct
Time
Starting Time: 0 sec
Duration: 0 sec
Ending Time: 0 sec

Materials

Matl. 1 - Embankment Material

Model: Saturated / Unsaturated
Hydraulic
K-Function: Matl. 1 Embankment Material
Ky'/Kx' Ratio: 0.25
Rotation: 0 °
Vol. WC. Function: Matl. 1 Embankment Fill from Borrow Areas

Matl. 2 - Surficial Overburden Layer

Model: Saturated / Unsaturated
Hydraulic
K-Function: Matl. 2 Surficial Overburden Layer
Ky'/Kx' Ratio: 0.1
Rotation: 0 °
Vol. WC. Function: Matl. 2 Surficial Overburden Layer

Matl. 3 - Shallow Alluvial Deposits

Model: Saturated / Unsaturated
Hydraulic
K-Function: Matl. 3 Shallow Alluvial Deposits
Ky'/Kx' Ratio: 0.1
Rotation: 0 °
Vol. WC. Function: Matl. 3 Shallow Alluvial Deposits

Matl. 4 - Deeper Marine Deposits

Model: Saturated / Unsaturated
Hydraulic
K-Function: Matl. 4 Deeper Marine Deposits
Ky'/Kx' Ratio: 0.1
Rotation: 0 °
Vol. WC. Function: Matl. 4 Deeper Marine Deposits

Matl. 5 - Soil Cement Armoring

Model: Saturated / Unsaturated
Hydraulic
K-Function: Matl. 5 Soil Cement Armoring
Ky'/Kx' Ratio: 1
Rotation: 0 °
Vol. WC. Function: Matl. 5 Soil Cement Armoring

Matl. 6 - Fine Drainage Gravel

Model: Saturated / Unsaturated
Hydraulic
K-Function: Matl. 6 Fine Drainage Gravel
Ky'/Kx' Ratio: 1
Rotation: 0 °
Vol. WC. Function: Mat. 6 Fine Drainage Gravel (No 89)

Matl. 8 - Filter Sand

Model: Saturated / Unsaturated
Hydraulic
K-Function: Matl. 8 Filter Sand
Ky'/Kx' Ratio: 1
Rotation: 0 °
Vol. WC. Function: Matl. 8 Filter Sand (C33)

Matl. 9 Concrete Outfall Works

Model: Saturated Only
Hydraulic
K-Sat: 3.28e-010 ft/sec
Ky'/Kx' Ratio: 1
Rotation: 0 °
Volumetric Water Content: 0.3 ft^3/ft^3
Mv: 1e-008 /psf

Boundary Conditions

PR at Elev. 18ft

Type: Head (H) 18
Review: No

Drainage

Type: Total Flux (Q) 0
Review: Yes

K-05 WAF Surcharge Pool at Elev. 27ft

Type: Head (H) 27
Review: No

Flux Sections

Flux Section 1

Coordinates

Coordinate: (-56.368089, 17.11908) ft
Coordinate: (-56.359991, 15.897243) ft

Flux Section 2

Coordinates

Coordinate: (-100.27362, 18.818898) ft
Coordinate: (-86.017717, 14.05315) ft
Coordinate: (-65.383858, 14.059055) ft

Flux Section 3

Coordinates

Coordinate: (-11.352061, 28.166901) ft
Coordinate: (-11.307284, 14.896151) ft

Flux Section 4

Coordinates

Coordinate: (-11.307284, 14.851374) ft
Coordinate: (-55.502072, 14.873763) ft

Flux Section 5

Coordinates

Coordinate: (-0.349869, 33.216015) ft
Coordinate: (-0.361475, -114.73943) ft

Flux Section 6

Coordinates

Coordinate: (-109.10947, 18.913159) ft
Coordinate: (-109.07273, -114.73608) ft

K Functions

Matl. 1 Embankment Material

Model: Hyd K Data Point Function
Function: X-Conductivity vs. Pore-Water Pressure
Curve Fit to Data: 100 %
Segment Curvature: 36 %
K-Saturation: 0.000131
Data Points: Matric Suction (psf), X-Conductivity (ft/sec)
Data Point: (0.01, 0.000131)
Data Point: (0.018329807, 0.00013099927)
Data Point: (0.033598183, 0.00013099852)
Data Point: (0.061584821, 0.00013099772)

Data Point: (0.11288379, 0.00013099684)
Data Point: (0.20691381, 0.00013099581)
Data Point: (0.37926902, 0.0001309945)
Data Point: (0.6951928, 0.00013099268)
Data Point: (1.274275, 0.00013098992)
Data Point: (2.3357215, 0.00013098549)
Data Point: (4.2813324, 0.0001309777)
Data Point: (7.8475997, 0.00013096339)
Data Point: (14.384499, 0.00013094955)
Data Point: (26.366509, 0.00013089452)
Data Point: (48.329302, 0.00013043835)
Data Point: (88.586679, 0.00012910123)
Data Point: (162.37767, 5.664247e-005)
Data Point: (297.63514, 2.5159921e-006)
Data Point: (545.55948, 4.7485927e-008)
Data Point: (1,000, 1.7886028e-009)

Estimation Properties

Hyd. K-Function Estimation Method: Fredlund-Xing Function
Volume Water Content Function: Matl. 1 Embankment Fill from Borrow Areas
Hydraulic K Sat: 0.000131 ft/sec
Residual Water Content: 0.0495 ft^3/ft^3
Maximum: 1,000
Minimum: 0.01
Num. Points: 20

Matl. 4 Deeper Marine Deposits

Model: Hyd K Data Point Function
Function: X-Conductivity vs. Pore-Water Pressure
Curve Fit to Data: 100 %
Segment Curvature: 44 %
K-Saturation: 0.000984
Data Points: Matric Suction (psf), X-Conductivity (ft/sec)
Data Point: (0.01, 0.000984)
Data Point: (0.018329807, 0.00098398585)
Data Point: (0.033598183, 0.00098397151)
Data Point: (0.061584821, 0.00098395679)
Data Point: (0.11288379, 0.00098394139)
Data Point: (0.20691381, 0.00098392476)
Data Point: (0.37926902, 0.00098390584)
Data Point: (0.6951928, 0.00098388274)
Data Point: (1.274275, 0.00098385199)
Data Point: (2.3357215, 0.0009838074)
Data Point: (4.2813324, 0.00098373618)
Data Point: (7.8475997, 0.00098361453)
Data Point: (14.384499, 0.0009834543)
Data Point: (26.366509, 0.00098304118)
Data Point: (48.329302, 0.00098089274)
Data Point: (88.586679, 0.00098804841)

Data Point: (162.37767, 0.00089693201)
Data Point: (297.63514, 0.00029836287)
Data Point: (545.55948, 5.5741791e-006)
Data Point: (1,000, 8.8545842e-008)

Estimation Properties

Hyd. K-Function Estimation Method: Fredlund-Xing Function
Volume Water Content Function: Matl. 4 Deeper Marine Deposits
Hydraulic K Sat: 0.000984 ft/sec
Residual Water Content: 0.03 ft^3/ft^3
Maximum: 1,000
Minimum: 0.01
Num. Points: 20

Matl. 6 Fine Drainage Gravel

Model: Hyd K Data Point Function
Function: X-Conductivity vs. Pore-Water Pressure

Curve Fit to Data: 100 %
Segment Curvature: 40 %

K-Saturation: 0.02315
Data Points: Matric Suction (psf), X-Conductivity (ft/sec)

Data Point: (0.01, 0.02315)
Data Point: (0.018329807, 0.023149999)
Data Point: (0.033598183, 0.023149997)
Data Point: (0.061584821, 0.023149994)
Data Point: (0.11288379, 0.023149984)
Data Point: (0.20691381, 0.023149981)
Data Point: (0.37926902, 0.023150055)
Data Point: (0.6951928, 0.023149315)
Data Point: (1.274275, 0.02314882)
Data Point: (2.3357215, 0.023163455)
Data Point: (4.2813324, 0.02041826)
Data Point: (7.8475997, 0.0039249052)
Data Point: (14.384499, 6.6024733e-005)
Data Point: (26.366509, 7.000732e-007)
Data Point: (48.329302, 2.0374523e-008)
Data Point: (88.586679, 3.5541328e-009)
Data Point: (162.37767, 7.5581773e-010)
Data Point: (297.63514, 1.5822386e-010)
Data Point: (545.55948, 2.6567478e-011)
Data Point: (1,000, 2.4617797e-012)

Estimation Properties

Hyd. K-Function Estimation Method: Fredlund-Xing Function
Volume Water Content Function: Mat. 6 Fine Drainage Gravel (No 89)
Hydraulic K Sat: 0.02315 ft/sec
Residual Water Content: 0.042 ft^3/ft^3
Maximum: 1,000
Minimum: 0.01
Num. Points: 20

Matl. 2 Surficial Overburden Layer

Model: Hyd K Data Point Function
Function: X-Conductivity vs. Pore-Water Pressure
Curve Fit to Data: 100 %
Segment Curvature: 36 %
K-Saturation: 0.00026
Data Points: Matric Suction (psf), X-Conductivity (ft/sec)
Data Point: (0.01, 0.00026)
Data Point: (0.018329807, 0.00025999835)
Data Point: (0.033598183, 0.00025999664)
Data Point: (0.061584821, 0.00025999485)
Data Point: (0.11288379, 0.00025999288)
Data Point: (0.20691381, 0.00025999062)
Data Point: (0.37926902, 0.00025998779)
Data Point: (0.6951928, 0.00025998393)
Data Point: (1.274275, 0.00025997819)
Data Point: (2.3357215, 0.00025996907)
Data Point: (4.2813324, 0.00025995329)
Data Point: (7.8475997, 0.00025992467)
Data Point: (14.384499, 0.00025989276)
Data Point: (26.366509, 0.00025978642)
Data Point: (48.329302, 0.00025903344)
Data Point: (88.586679, 0.0002586222)
Data Point: (162.37767, 0.00013432217)
Data Point: (297.63514, 8.1547435e-006)
Data Point: (545.55948, 1.3663567e-007)
Data Point: (1,000, 4.5608744e-009)
Estimation Properties
Hyd. K-Function Estimation Method: Fredlund-Xing Function
Volume Water Content Function: Matl. 2 Surficial Overburden Layer
Hydraulic K Sat: 0.00026 ft/sec
Residual Water Content: 0.0495 ft^3/ft^3
Maximum: 1,000
Minimum: 0.01
Num. Points: 20

Matl. 3 Shallow Alluvial Deposits

Model: Hyd K Data Point Function
Function: X-Conductivity vs. Pore-Water Pressure
Curve Fit to Data: 100 %
Segment Curvature: 36 %
K-Saturation: 0.00174
Data Points: Matric Suction (psf), X-Conductivity (ft/sec)
Data Point: (0.01, 0.00174)
Data Point: (0.018329807, 0.0017399903)
Data Point: (0.033598183, 0.0017399803)
Data Point: (0.061584821, 0.0017399698)

Data Point: (0.11288379, 0.0017399581)
Data Point: (0.20691381, 0.0017399444)
Data Point: (0.37926902, 0.0017399269)
Data Point: (0.6951928, 0.0017399027)
Data Point: (1.274275, 0.0017398661)
Data Point: (2.3357215, 0.0017398072)
Data Point: (4.2813324, 0.0017397038)
Data Point: (7.8475997, 0.0017395137)
Data Point: (14.384499, 0.0017393299)
Data Point: (26.366509, 0.001738599)
Data Point: (48.329302, 0.0017325399)
Data Point: (88.586679, 0.0017147796)
Data Point: (162.37767, 0.00075235037)
Data Point: (297.63514, 3.3418521e-005)
Data Point: (545.55948, 6.307291e-007)
Data Point: (1,000, 2.3757014e-008)

Estimation Properties
Hyd. K-Function Estimation Method: Fredlund-Xing Function
Volume Water Content Function: Matl. 3 Shallow Alluvial Deposits
Hydraulic K Sat: 0.00174 ft/sec
Residual Water Content: 0.0495 ft^3/ft^3
Maximum: 1,000
Minimum: 0.01
Num. Points: 20

Matl. 5 Soil Cement Armoring

Model: Hyd K Data Point Function
Function: X-Conductivity vs. Pore-Water Pressure
Curve Fit to Data: 100 %
Segment Curvature: 44 %
K-Saturation: 1.31e-005
Data Points: Matric Suction (psf), X-Conductivity (ft/sec)
Data Point: (0.01, 1.31e-005)
Data Point: (0.018329807, 1.3099927e-005)
Data Point: (0.033598183, 1.3099852e-005)
Data Point: (0.061584821, 1.3099772e-005)
Data Point: (0.11288379, 1.3099684e-005)
Data Point: (0.20691381, 1.3099581e-005)
Data Point: (0.37926902, 1.309945e-005)
Data Point: (0.6951928, 1.3099268e-005)
Data Point: (1.274275, 1.3098992e-005)
Data Point: (2.3357215, 1.3098549e-005)
Data Point: (4.2813324, 1.309777e-005)
Data Point: (7.8475997, 1.3096339e-005)
Data Point: (14.384499, 1.3094955e-005)
Data Point: (26.366509, 1.3089452e-005)
Data Point: (48.329302, 1.3043835e-005)
Data Point: (88.586679, 1.2910123e-005)

Data Point: (162.37767, 5.664247e-006)
Data Point: (297.63514, 2.5159921e-007)
Data Point: (545.55948, 4.7485927e-009)
Data Point: (1,000, 1.7886028e-010)

Estimation Properties

Hyd. K-Function Estimation Method: Fredlund-Xing Function
Volume Water Content Function: Matl. 5 Soil Cement Armoring
Hydraulic K Sat: 1.31e-005 ft/sec
Residual Water Content: 0.03 ft^3/ft^3
Maximum: 1,000
Minimum: 0.01
Num. Points: 20

Matl. 8 Filter Sand

Model: Hyd K Data Point Function
Function: X-Conductivity vs. Pore-Water Pressure

Curve Fit to Data: 100 %
Segment Curvature: 44 %

K-Saturation: 0.000925
Data Points: Matric Suction (psf), X-Conductivity (ft/sec)

Data Point: (0.01, 0.000925)
Data Point: (0.018329807, 0.00092499993)
Data Point: (0.033598183, 0.00092499981)
Data Point: (0.061584821, 0.0009249996)
Data Point: (0.11288379, 0.00092499919)
Data Point: (0.20691381, 0.00092499854)
Data Point: (0.37926902, 0.00092499785)
Data Point: (0.6951928, 0.00092499117)
Data Point: (1.274275, 0.00092498427)
Data Point: (2.3357215, 0.00092515575)
Data Point: (4.2813324, 0.00092444336)
Data Point: (7.8475997, 0.00092025484)
Data Point: (14.384499, 0.00086768248)
Data Point: (26.366509, 0.00022215817)
Data Point: (48.329302, 5.6149022e-006)
Data Point: (88.586679, 9.4931606e-008)
Data Point: (162.37767, 4.4270536e-009)
Data Point: (297.63514, 6.3580973e-010)
Data Point: (545.55948, 1.1244323e-010)
Data Point: (1,000, 1.0762229e-011)

Estimation Properties

Hyd. K-Function Estimation Method: Fredlund-Xing Function
Volume Water Content Function: Matl. 8 Filter Sand (C33)
Hydraulic K Sat: 0.000925 ft/sec
Residual Water Content: 0.03 ft^3/ft^3
Maximum: 1,000
Minimum: 0.01
Num. Points: 20

Vol. Water Content Functions

Matl. 3 Shallow Alluvial Deposits

Model: Vol WC Data Point Function
Function: Vol. Water Content vs. Pore-Water Pressure
Mv: 2.5e-006 /psf
Saturated Water Content: 0.30020276 ft^3/ft^3
Residual Water Content: 0.030020276 ft^3/ft^3
Curve Fit to Data: 100 %
Segment Curvature: 40 %
Porosity: 0.30020276
Data Points: Matric Suction (psf), Vol. Water Content (ft^3/ft^3)
Data Point: (0.01, 0.29987196)
Data Point: (0.018329807, 0.29987196)
Data Point: (0.033598183, 0.29987196)
Data Point: (0.061584821, 0.29987196)
Data Point: (0.11288379, 0.29987196)
Data Point: (0.20691381, 0.29987196)
Data Point: (0.37926902, 0.29987196)
Data Point: (0.6951928, 0.29987196)
Data Point: (1.274275, 0.29987196)
Data Point: (2.3357215, 0.29987196)
Data Point: (4.2813324, 0.29987196)
Data Point: (7.8475997, 0.29987196)
Data Point: (14.384499, 0.29987196)
Data Point: (26.366509, 0.29987196)
Data Point: (48.329302, 0.29987196)
Data Point: (88.586679, 0.29667682)
Data Point: (162.37767, 0.20150036)
Data Point: (297.63514, 0.085811521)
Data Point: (545.55948, 0.049379583)
Data Point: (1,000, 0.039446735)
Estimation Properties
Vol. WC Estimation Method: Grain Size Function
Saturated Water Content: 0.3 ft^3/ft^3
Sample Material: Clay
Liquid Limit: 0 %
Diameter at 10% passing: 0.07000000000000001
Diameter at 60% passing: 0.2
Maximum: 1,000
Minimum: 0.01
Num. Points: 20

Matl. 1 Embankment Fill from Borrow Areas

Model: Vol WC Data Point Function
Function: Vol. Water Content vs. Pore-Water Pressure
Mv: 2.5e-006 /psf

Saturated Water Content: 0.30020276 ft^3/ft^3
Residual Water Content: 0.030020276 ft^3/ft^3
Curve Fit to Data: 100 %
Segment Curvature: 40 %
Porosity: 0.30020276
Data Points: Matric Suction (psf), Vol. Water Content (ft^3/ft^3)
Data Point: (0.01, 0.29987196)
Data Point: (0.018329807, 0.29987196)
Data Point: (0.033598183, 0.29987196)
Data Point: (0.061584821, 0.29987196)
Data Point: (0.11288379, 0.29987196)
Data Point: (0.20691381, 0.29987196)
Data Point: (0.37926902, 0.29987196)
Data Point: (0.6951928, 0.29987196)
Data Point: (1.274275, 0.29987196)
Data Point: (2.3357215, 0.29987196)
Data Point: (4.2813324, 0.29987196)
Data Point: (7.8475997, 0.29987196)
Data Point: (14.384499, 0.29987196)
Data Point: (26.366509, 0.29987196)
Data Point: (48.329302, 0.29987196)
Data Point: (88.586679, 0.29667682)
Data Point: (162.37767, 0.20150036)
Data Point: (297.63514, 0.085811521)
Data Point: (545.55948, 0.049379583)
Data Point: (1,000, 0.039446735)
Estimation Properties
Vol. WC Estimation Method: Grain Size Function
Saturated Water Content: 0.3 ft^3/ft^3
Sample Material: Clay
Liquid Limit: 0 %
Diameter at 10% passing: 0.07000000000000001
Diameter at 60% passing: 0.2
Maximum: 1,000
Minimum: 0.01
Num. Points: 20

Matl. 2 Surficial Overburden Layer

Model: Vol WC Data Point Function
Function: Vol. Water Content vs. Pore-Water Pressure
Mv: 2.5e-006 /psf
Saturated Water Content: 0.30132774 ft^3/ft^3
Residual Water Content: 0.030132774 ft^3/ft^3
Curve Fit to Data: 100 %
Segment Curvature: 40 %
Porosity: 0.30132774
Data Points: Matric Suction (psf), Vol. Water Content (ft^3/ft^3)
Data Point: (0.01, 0.30110223)

Data Point: (0.018329807, 0.30110223)
Data Point: (0.033598183, 0.30110223)
Data Point: (0.061584821, 0.30110223)
Data Point: (0.11288379, 0.30110223)
Data Point: (0.20691381, 0.30110223)
Data Point: (0.37926902, 0.30110223)
Data Point: (0.6951928, 0.30110223)
Data Point: (1.274275, 0.30110223)
Data Point: (2.3357215, 0.30110223)
Data Point: (4.2813324, 0.30110223)
Data Point: (7.8475997, 0.30110223)
Data Point: (14.384499, 0.30110223)
Data Point: (26.366509, 0.30110223)
Data Point: (48.329302, 0.30110223)
Data Point: (88.586679, 0.29938489)
Data Point: (162.37767, 0.21986255)
Data Point: (297.63514, 0.094851578)
Data Point: (545.55948, 0.051777012)
Data Point: (1,000, 0.040605935)

Estimation Properties
Vol. WC Estimation Method: Grain Size Function
Saturated Water Content: 0.3 ft^3/ft^3
Sample Material: Clay
Liquid Limit: 0 %
Diameter at 10% passing: 0.07000000000000001
Diameter at 60% passing: 0.18
Maximum: 1,000
Minimum: 0.01
Num. Points: 20

Matl. 8 Filter Sand (C33)

Model: Vol WC Data Point Function
Function: Vol. Water Content vs. Pore-Water Pressure
Mv: 8e-007 /psf
Saturated Water Content: 0.30081752 ft^3/ft^3
Residual Water Content: 0.030081752 ft^3/ft^3
Curve Fit to Data: 100 %
Segment Curvature: 48 %
Porosity: 0.30081752
Data Points: Matric Suction (psf), Vol. Water Content (ft^3/ft^3)
Data Point: (0.01, 0.30028388)
Data Point: (0.018329807, 0.30028388)
Data Point: (0.033598183, 0.30028388)
Data Point: (0.061584821, 0.30028388)
Data Point: (0.11288379, 0.30028388)
Data Point: (0.20691381, 0.30028388)
Data Point: (0.37926902, 0.30028388)
Data Point: (0.6951928, 0.30028388)

Data Point: (1.274275, 0.30028388)
Data Point: (2.3357215, 0.30028388)
Data Point: (4.2813324, 0.30028388)
Data Point: (7.8475997, 0.30028388)
Data Point: (14.384499, 0.28112842)
Data Point: (26.366509, 0.15065712)
Data Point: (48.329302, 0.048430554)
Data Point: (88.586679, 0.021674388)
Data Point: (162.37767, 0.016081301)
Data Point: (297.63514, 0.013674367)
Data Point: (545.55948, 0.011770874)
Data Point: (1,000, 0.010084825)

Estimation Properties

Vol. WC Estimation Method: Grain Size Function
Saturated Water Content: 0.3 ft^3/ft^3
Sample Material: Gravel
Liquid Limit: 0 %
Diameter at 10% passing: 0.38
Diameter at 60% passing: 1.6
Maximum: 1,000
Minimum: 0.01
Num. Points: 20

Mat. 6 Fine Drainage Gravel (No 89)

Model: Vol WC Data Point Function
Function: Vol. Water Content vs. Pore-Water Pressure

Mv: 4e-007 /psf
Saturated Water Content: 0.21947752 ft^3/ft^3
Residual Water Content: 0.021947752 ft^3/ft^3
Curve Fit to Data: 100 %
Segment Curvature: 48 %

Porosity: 0.21947752
Data Points: Matric Suction (psf), Vol. Water Content (ft^3/ft^3)

Data Point: (0.01, 0.21916427)
Data Point: (0.018329807, 0.21916427)
Data Point: (0.033598183, 0.21916427)
Data Point: (0.061584821, 0.21916427)
Data Point: (0.11288379, 0.21916427)
Data Point: (0.20691381, 0.21916427)
Data Point: (0.37926902, 0.21916427)
Data Point: (0.6951928, 0.21916427)
Data Point: (1.274275, 0.21916427)
Data Point: (2.3357215, 0.21916427)
Data Point: (4.2813324, 0.20182012)
Data Point: (7.8475997, 0.090949254)
Data Point: (14.384499, 0.021737158)
Data Point: (26.366509, 0.0080845337)
Data Point: (48.329302, 0.0057554944)

Data Point: (88.586679, 0.0048689464)
Data Point: (162.37767, 0.0041947283)
Data Point: (297.63514, 0.0036057207)
Data Point: (545.55948, 0.0030872724)
Data Point: (1,000, 0.002632805)
Estimation Properties
Vol. WC Estimation Method: Grain Size Function
Saturated Water Content: 0.21875 ft^3/ft^3
Sample Material: Clay
Liquid Limit: 0 %
Diameter at 10% passing: 3.5
Diameter at 60% passing: 7.1
Maximum: 1,000
Minimum: 0.01
Num. Points: 20

Matl. 4 Deeper Marine Deposits

Model: Vol WC Data Point Function
Function: Vol. Water Content vs. Pore-Water Pressure
Mv: 2.5e-006 /psf
Saturated Water Content: 0.30154597 ft^3/ft^3
Residual Water Content: 0.030154597 ft^3/ft^3
Curve Fit to Data: 100 %
Segment Curvature: 40 %
Porosity: 0.30154597
Data Points: Matric Suction (psf), Vol. Water Content (ft^3/ft^3)
Data Point: (0.01, 0.30100508)
Data Point: (0.018329807, 0.30100508)
Data Point: (0.033598183, 0.30100508)
Data Point: (0.061584821, 0.30100508)
Data Point: (0.11288379, 0.30100508)
Data Point: (0.20691381, 0.30100508)
Data Point: (0.37926902, 0.30100508)
Data Point: (0.6951928, 0.30100508)
Data Point: (1.274275, 0.30100508)
Data Point: (2.3357215, 0.30100508)
Data Point: (4.2813324, 0.30100508)
Data Point: (7.8475997, 0.30100508)
Data Point: (14.384499, 0.30100508)
Data Point: (26.366509, 0.30100508)
Data Point: (48.329302, 0.30100508)
Data Point: (88.586679, 0.30100508)
Data Point: (162.37767, 0.2887592)
Data Point: (297.63514, 0.17412515)
Data Point: (545.55948, 0.076942285)
Data Point: (1,000, 0.051397358)
Estimation Properties
Vol. WC Estimation Method: Grain Size Function

Saturated Water Content: 0.3 ft^3/ft^3
Sample Material: Clay
Liquid Limit: 0 %
Diameter at 10% passing: 0.06
Diameter at 60% passing: 0.11
Maximum: 1,000
Minimum: 0.01
Num. Points: 20

Matl. 5 Soil Cement Armoring

Model: Vol WC Data Point Function
Function: Vol. Water Content vs. Pore-Water Pressure
Mv: 2.5e-006 /psf
Saturated Water Content: 0.30020276 ft^3/ft^3
Residual Water Content: 0.030020276 ft^3/ft^3
Curve Fit to Data: 100 %
Segment Curvature: 40 %
Porosity: 0.30020276
Data Points: Matric Suction (psf), Vol. Water Content (ft^3/ft^3)
Data Point: (0.01, 0.29987196)
Data Point: (0.018329807, 0.29987196)
Data Point: (0.033598183, 0.29987196)
Data Point: (0.061584821, 0.29987196)
Data Point: (0.11288379, 0.29987196)
Data Point: (0.20691381, 0.29987196)
Data Point: (0.37926902, 0.29987196)
Data Point: (0.6951928, 0.29987196)
Data Point: (1.274275, 0.29987196)
Data Point: (2.3357215, 0.29987196)
Data Point: (4.2813324, 0.29987196)
Data Point: (7.8475997, 0.29987196)
Data Point: (14.384499, 0.29987196)
Data Point: (26.366509, 0.29987196)
Data Point: (48.329302, 0.29987196)
Data Point: (88.586679, 0.29667682)
Data Point: (162.37767, 0.20150036)
Data Point: (297.63514, 0.085811521)
Data Point: (545.55948, 0.049379583)
Data Point: (1,000, 0.039446735)
Estimation Properties
Vol. WC Estimation Method: Grain Size Function
Saturated Water Content: 0.3 ft^3/ft^3
Sample Material: Clay
Liquid Limit: 0 %
Diameter at 10% passing: 0.07000000000000001
Diameter at 60% passing: 0.2
Maximum: 1,000
Minimum: 0.01

Num. Points: 20

Points

	X (ft)	Y (ft)
Point 1	-56.5	18
Point 2	-14.5	18
Point 3	-14.5	28
Point 4	-11.5	28
Point 5	-11.5	15
Point 6	-7	34.5
Point 7	-7	33.4
Point 8	6.8	33.4
Point 9	14	31
Point 10	13.7	30.1
Point 11	51.6	17.5
Point 12	54.2	15
Point 13	55.0033	16.4828
Point 14	54.9	16.4
Point 15	54.8636	16.2065
Point 16	55.097	16.0075
Point 17	55.3031	16.0832
Point 18	55.3561	16.2916
Point 19	55.3	16.4
Point 20	55.1797	16.4906
Point 21	62.3	15
Point 22	59.3	16
Point 23	57.8	16.5
Point 24	61	16.5
Point 25	7	34.5
Point 26	62.3	13.5
Point 27	70.3	13.5
Point 28	70.3	11.5
Point 29	72.3	11.5
Point 30	72.3	13.5
Point 31	72.3	15

Point 32	65.5	15
Point 33	62.5	16
Point 34	-90.5	13.5
Point 35	100	15
Point 36	100	13.5
Point 37	100	-14.5
Point 38	-90.5	-14.5
Point 39	100	-114.5
Point 40	-90.5	-114.5
Point 41	-180	15
Point 42	-180	13.5
Point 43	-180	-14.5
Point 44	-180	-114.5
Point 45	1,600	15
Point 46	1,600	13.5
Point 47	1,600	-14.5
Point 48	1,600	-114.5
Point 49	41.5	23
Point 50	55.3546	16.1839
Point 51	54.9487	16.066
Point 52	55.2227	16.0254
Point 53	-1,700	15
Point 54	-1,700	13.5
Point 55	-1,700	-14.5
Point 56	-1,700	-114.5
Point 57	-65.5	13.5
Point 58	-55.5	13.5
Point 59	-55.5	15
Point 60	-55.5	16
Point 61	-55.5	17
Point 62	-55.5	18
Point 63	-11.5	16
Point 64	-12.5	16
Point 65	-12.5	17
Point 66	-56.5	16
Point 67	-56.5	17

Point 68	-65.5	15
Point 69	-56.5	15
Point 70	-70.5	13.5
Point 71	-70.5	14.25
Point 72	-65.5	14.25
Point 73	-70.5	15
Point 74	-85.5	13.5
Point 75	-85.5	14.25
Point 76	-85.5	15
Point 77	-90.5	15
Point 78	-85.9	13.5
Point 79	-85.9	14.25
Point 80	-88.1	15
Point 81	-85.8	15
Point 82	-100.1	19
Point 83	-97.8	19
Point 84	-102.5	19
Point 85	-128.5	15
Point 86	-116.5	19
Point 87	-85.9	15
Point 88	-119.5	18
Point 89	-99.5	18
Point 90	-94.8	18
Point 91	29.5	27

Lines

	Start Point	End Point	Hydraulic Boundary
Line 1	2	3	
Line 2	3	4	
Line 3	1	6	Drainage
Line 4	6	7	
Line 5	7	8	
Line 6	8	9	
Line 7	9	10	
Line 8	10	11	

Line 9	11	12	
Line 10	12	5	
Line 11	13	14	
Line 12	14	15	
Line 13	18	19	
Line 14	19	20	
Line 15	20	13	
Line 16	12	21	
Line 17	21	22	
Line 18	22	16	
Line 19	20	23	
Line 20	23	9	
Line 21	23	24	
Line 22	25	6	
Line 23	21	26	
Line 24	26	27	
Line 25	27	28	
Line 26	28	29	
Line 27	29	30	
Line 28	30	31	
Line 29	31	32	K-05 WAF Surcharge Pool at Elev. 27ft
Line 30	32	33	K-05 WAF Surcharge Pool at Elev. 27ft
Line 31	33	22	
Line 32	31	35	K-05 WAF Surcharge Pool at Elev. 27ft
Line 33	35	36	
Line 34	36	30	
Line 35	36	37	
Line 36	37	38	
Line 37	38	34	
Line 38	37	39	
Line 39	39	40	
Line 40	40	38	
Line 41	34	42	
Line 42	42	41	
Line 43	38	43	
Line 44	43	42	

Line 45	40	44	
Line 46	44	43	
Line 47	35	45	K-05 WAF Surcharge Pool at Elev. 27ft
Line 48	45	46	
Line 49	46	36	
Line 50	46	47	
Line 51	47	37	
Line 52	47	48	
Line 53	48	39	
Line 54	24	49	K-05 WAF Surcharge Pool at Elev. 27ft
Line 55	23	22	
Line 56	24	33	K-05 WAF Surcharge Pool at Elev. 27ft
Line 57	17	50	
Line 58	50	18	
Line 59	15	51	
Line 60	51	16	
Line 61	16	52	
Line 62	52	17	
Line 63	53	41	PR at Elev. 18ft
Line 64	42	54	
Line 65	54	53	
Line 66	43	55	
Line 67	55	54	
Line 68	44	56	
Line 69	56	55	
Line 70	26	58	
Line 71	1	62	
Line 72	62	2	
Line 73	58	59	
Line 74	59	60	
Line 75	60	61	
Line 76	61	62	
Line 77	5	59	
Line 78	4	63	
Line 79	63	5	
Line 80	63	64	

Line 81	64	60	
Line 82	64	65	
Line 83	60	66	
Line 84	67	66	Drainage
Line 85	61	67	
Line 86	67	1	
Line 87	58	57	
Line 88	66	69	
Line 89	69	68	
Line 90	57	70	
Line 91	68	72	
Line 92	72	71	
Line 93	73	71	
Line 94	68	73	Drainage
Line 95	70	74	
Line 96	75	76	
Line 97	71	75	
Line 98	73	76	Drainage
Line 99	72	57	
Line 100	70	71	
Line 101	74	75	
Line 102	74	78	
Line 103	78	34	
Line 104	77	34	
Line 105	78	79	
Line 106	79	80	
Line 107	80	77	
Line 108	75	79	
Line 109	80	82	
Line 110	82	83	
Line 111	84	82	
Line 112	77	85	
Line 113	86	84	
Line 114	85	41	PR at Elev. 18ft
Line 115	81	87	
Line 116	87	80	

Line 117	81	76	Drainage
Line 118	79	87	
Line 119	85	88	PR at Elev. 18ft
Line 120	88	86	
Line 121	77	89	
Line 122	89	84	
Line 123	83	90	
Line 124	90	81	Drainage
Line 125	65	61	
Line 126	49	91	K-05 WAF Surcharge Pool at Elev. 27ft
Line 127	91	25	

Regions

	Material	Points	Area (ft²)
Region 1	Matl. 1 - Embankment Material	1,6,7,8,9,10,11,12,5,63,4,3,2,62	1,101.7
Region 2		13,14,15,51,16,52,17,50,18,19,20	0.18474
Region 3	Matl. 8 - Filter Sand	9,10,11,12,21,22,16,51,15,14,13,20,23	52.737
Region 4	Matl. 5 - Soil Cement Armoring	6,7,8,9,23,24,49,91,25	74.19
Region 5	Matl. 5 - Soil Cement Armoring	22,21,26,27,28,29,30,31,32,33	22.2
Region 6	Matl. 2 - Surficial Overburden Layer	31,35,36,30	41.55
Region 7	Matl. 4 - Deeper Marine Deposits	38,37,39,40	19,050
Region 8	Matl. 3 - Shallow Alluvial Deposits	42,34,38,43	2,506
Region 9	Matl. 4 - Deeper Marine Deposits	43,38,40,44	8,950
Region 10	Matl. 2 - Surficial Overburden Layer	35,45,46,36	2,250
Region 11	Matl. 3 - Shallow Alluvial Deposits	36,46,47,37	42,000

Region 12	Matl. 4 - Deeper Marine Deposits	37,47,48,39	1.5e+005
Region 13	Matl. 8 - Filter Sand	20,23,22,16,52,17,50,18,19	1.5978
Region 14	Matl. 5 - Soil Cement Armoring	23,24,33,22	1.6
Region 15	Matl. 2 - Surficial Overburden Layer	53,41,42,54	2,280
Region 16	Matl. 3 - Shallow Alluvial Deposits	42,43,55,54	42,560
Region 17	Matl. 4 - Deeper Marine Deposits	55,43,44,56	1.52e+005
Region 18	Matl. 3 - Shallow Alluvial Deposits	34,38,37,36,30,29,28,27,26,58,57,70,74,78	5,330
Region 19	Matl. 2 - Surficial Overburden Layer	59,58,26,21,12,5	176.7
Region 20	Matl. 8 - Filter Sand	60,59,5,63,64	44
Region 21	Matl. 6 - Fine Drainage Gravel	61,60,64,65	43
Region 22	Matl. 8 - Filter Sand	62,61,65,64,63,4,3,2	75
Region 23	Matl. 6 - Fine Drainage Gravel	67,66,60,61	1
Region 24	Matl. 9 Concrete Outfall Works	1,62,61,67	1
Region 25	Matl. 9 Concrete Outfall Works	68,72,57,58,59,60,66,69	16
Region 26	Matl. 6 - Fine Drainage Gravel	73,71,72,68	3.75
Region 27	Matl. 6 - Fine Drainage Gravel	76,75,71,73	11.25
Region 28	Matl. 8 - Filter Sand	71,72,57,70	3.75
Region 29	Matl. 8 - Filter Sand	71,70,74,75	11.25
Region 30	Matl. 8 - Filter Sand	77,34,78,79,80	6.075

Region 31	Matl. 8 - Filter Sand	79,78,74,75	0.3
Region 32	Matl. 6 - Fine Drainage Gravel	80,82,83,90,81,87	9.2
Region 33	Matl. 8 - Filter Sand	80,77,89,84,82	9.6
Region 34	Matl. 1 - Embankment Material	77,85,88,86,84,89	104
Region 35	Matl. 2 - Surficial Overburden Layer	41,42,34,77,85	134.25
Region 36	Matl. 6 - Fine Drainage Gravel	87,81,76,75,79	0.3
Region 37	Matl. 6 - Fine Drainage Gravel	80,87,79	0.825

Steady-State Seepage (EOC)

Report generated using GeoStudio 2012. Copyright © 1991-2013 GEO-SLOPE International Ltd.

File Information

Title: LOWP PIR Analysis Section B
Created By: Viessman, Michael W CIV USARMY CESAJ (US)
Last Edited By: Viessman, Michael W CIV USARMY CESAJ (US)
Revision Number: 533
File Version: 8.2
Tool Version: 8.12.3.7901
Date: 8/26/2018
Time: 9:48:44 PM
File Name: PR Outlet to C38.gsz
Directory: C:\Users\k3engmwv\Documents\LOWP\FY17-18 PIR Work\SEEP and SLOPEW Files\
Last Solved Date: 8/26/2018
Last Solved Time: 8:48:54 PM

Project Settings

Length(L) Units: feet
Time(t) Units: Seconds
Force(F) Units: lbf
Pressure(p) Units: psf
Mass(M) Units: lbs
Mass Flux Units: lbs/sec
Unit Weight of Water: 62.4 pcf
View: 2D
Element Thickness: 1

Analysis Settings

Steady-State Seepage (EOC)

Description: PR outlet to C-38, gw at 10ft
Kind: SEEP/W
Method: Steady-State
Settings
    Include Air Flow: No
Control
    Apply Runoff: Yes
Convergence
    Maximum Number of Iterations: 1,000
    Minimum Pressure Head Difference: 0.005
    Significant Digits: 2

Max # of Reviews: 10
Hydraulic Under-Relaxation Criteria
Under-Relaxation Initial Rate: 1
Under-Relaxation Min. Rate: 0.1
Under-Relaxation Reduction Rate: 0.65
Under-Relaxation Iterations: 10
Equation Solver: Parallel Direct
Time
Starting Time: 0 sec
Duration: 0 sec
Ending Time: 0 sec

Materials

Matl. 1 - Embankment Material

Model: Saturated / Unsaturated
Hydraulic
K-Function: Matl. 1 Embankment Material
Ky'/Kx' Ratio: 0.25
Rotation: 0 °
Vol. WC. Function: Matl. 1 Embankment Fill from Borrow Areas

Matl. 2 - Surficial Overburden Layer

Model: Saturated / Unsaturated
Hydraulic
K-Function: Matl. 2 Surficial Overburden Layer
Ky'/Kx' Ratio: 0.1
Rotation: 0 °
Vol. WC. Function: Matl. 2 Surficial Overburden Layer

Matl. 3 - Shallow Alluvial Deposits

Model: Saturated / Unsaturated
Hydraulic
K-Function: Matl. 3 Shallow Alluvial Deposits
Ky'/Kx' Ratio: 0.1
Rotation: 0 °
Vol. WC. Function: Matl. 3 Shallow Alluvial Deposits

Matl. 4 - Deeper Marine Deposits

Model: Saturated / Unsaturated
Hydraulic
K-Function: Matl. 4 Deeper Marine Deposits
Ky'/Kx' Ratio: 0.1
Rotation: 0 °
Vol. WC. Function: Matl. 4 Deeper Marine Deposits

Boundary Conditions

Drainage

Type: Total Flux (Q) 0
Review: Yes

Groundwater at Elev. 10ft

Type: Head (H) 10
Review: No

Flux Sections

Flux Section 1

Coordinates
Coordinate: (-130.4, 30) ft
Coordinate: (-130.5, -114.7) ft

K Functions

Matl. 1 Embankment Material

Model: Hyd K Data Point Function
Function: X-Conductivity vs. Pore-Water Pressure
Curve Fit to Data: 100 %
Segment Curvature: 36 %
K-Saturation: 0.000131
Data Points: Matric Suction (psf), X-Conductivity (ft/sec)
Data Point: (0.01, 0.000131)
Data Point: (0.018329807, 0.00013099927)
Data Point: (0.033598183, 0.00013099852)
Data Point: (0.061584821, 0.00013099772)
Data Point: (0.11288379, 0.00013099684)
Data Point: (0.20691381, 0.00013099581)
Data Point: (0.37926902, 0.0001309945)
Data Point: (0.6951928, 0.00013099268)
Data Point: (1.274275, 0.00013098992)
Data Point: (2.3357215, 0.00013098549)
Data Point: (4.2813324, 0.0001309777)
Data Point: (7.8475997, 0.00013096339)
Data Point: (14.384499, 0.00013094955)
Data Point: (26.366509, 0.00013089452)
Data Point: (48.329302, 0.00013043835)
Data Point: (88.586679, 0.00012910123)
Data Point: (162.37767, 5.664247e-005)
Data Point: (297.63514, 2.5159921e-006)

Data Point: (545.55948, 4.7485927e-008)
Data Point: (1,000, 1.7886028e-009)
Estimation Properties
Hyd. K-Function Estimation Method: Fredlund-Xing Function
Volume Water Content Function: Matl. 1 Embankment Fill from Borrow Areas
Hydraulic K Sat: 0.000131 ft/sec
Residual Water Content: 0.0495 ft^3/ft^3
Maximum: 1,000
Minimum: 0.01
Num. Points: 20

Matl. 4 Deeper Marine Deposits

Model: Hyd K Data Point Function
Function: X-Conductivity vs. Pore-Water Pressure
Curve Fit to Data: 100 %
Segment Curvature: 44 %
K-Saturation: 0.000984
Data Points: Matric Suction (psf), X-Conductivity (ft/sec)
Data Point: (0.01, 0.000984)
Data Point: (0.018329807, 0.00098398585)
Data Point: (0.033598183, 0.00098397151)
Data Point: (0.061584821, 0.00098395679)
Data Point: (0.11288379, 0.00098394139)
Data Point: (0.20691381, 0.00098392476)
Data Point: (0.37926902, 0.00098390584)
Data Point: (0.6951928, 0.00098388274)
Data Point: (1.274275, 0.00098385199)
Data Point: (2.3357215, 0.0009838074)
Data Point: (4.2813324, 0.00098373618)
Data Point: (7.8475997, 0.00098361453)
Data Point: (14.384499, 0.0009834543)
Data Point: (26.366509, 0.00098304118)
Data Point: (48.329302, 0.00098089274)
Data Point: (88.586679, 0.00098804841)
Data Point: (162.37767, 0.00089693201)
Data Point: (297.63514, 0.00029836287)
Data Point: (545.55948, 5.5741791e-006)
Data Point: (1,000, 8.8545842e-008)
Estimation Properties
Hyd. K-Function Estimation Method: Fredlund-Xing Function
Volume Water Content Function: Matl. 4 Deeper Marine Deposits
Hydraulic K Sat: 0.000984 ft/sec
Residual Water Content: 0.03 ft^3/ft^3
Maximum: 1,000
Minimum: 0.01
Num. Points: 20

Matl. 2 Surficial Overburden Layer

Model: Hyd K Data Point Function
Function: X-Conductivity vs. Pore-Water Pressure
Curve Fit to Data: 100 %
Segment Curvature: 36 %
K-Saturation: 0.00026
Data Points: Matric Suction (psf), X-Conductivity (ft/sec)
Data Point: (0.01, 0.00026)
Data Point: (0.018329807, 0.00025999835)
Data Point: (0.033598183, 0.00025999664)
Data Point: (0.061584821, 0.00025999485)
Data Point: (0.11288379, 0.00025999288)
Data Point: (0.20691381, 0.00025999062)
Data Point: (0.37926902, 0.00025998779)
Data Point: (0.6951928, 0.00025998393)
Data Point: (1.274275, 0.00025997819)
Data Point: (2.3357215, 0.00025996907)
Data Point: (4.2813324, 0.00025995329)
Data Point: (7.8475997, 0.00025992467)
Data Point: (14.384499, 0.00025989276)
Data Point: (26.366509, 0.00025978642)
Data Point: (48.329302, 0.00025903344)
Data Point: (88.586679, 0.0002586222)
Data Point: (162.37767, 0.00013432217)
Data Point: (297.63514, 8.1547435e-006)
Data Point: (545.55948, 1.3663567e-007)
Data Point: (1,000, 4.5608744e-009)
Estimation Properties
Hyd. K-Function Estimation Method: Fredlund-Xing Function
Volume Water Content Function: Matl. 2 Surficial Overburden Layer
Hydraulic K Sat: 0.00026 ft/sec
Residual Water Content: 0.0495 ft^3/ft^3
Maximum: 1,000
Minimum: 0.01
Num. Points: 20

Matl. 3 Shallow Alluvial Deposits

Model: Hyd K Data Point Function
Function: X-Conductivity vs. Pore-Water Pressure
Curve Fit to Data: 100 %
Segment Curvature: 36 %
K-Saturation: 0.00174
Data Points: Matric Suction (psf), X-Conductivity (ft/sec)
Data Point: (0.01, 0.00174)
Data Point: (0.018329807, 0.0017399903)
Data Point: (0.033598183, 0.0017399803)
Data Point: (0.061584821, 0.0017399698)

Data Point: (0.11288379, 0.0017399581)
Data Point: (0.20691381, 0.0017399444)
Data Point: (0.37926902, 0.0017399269)
Data Point: (0.6951928, 0.0017399027)
Data Point: (1.274275, 0.0017398661)
Data Point: (2.3357215, 0.0017398072)
Data Point: (4.2813324, 0.0017397038)
Data Point: (7.8475997, 0.0017395137)
Data Point: (14.384499, 0.0017393299)
Data Point: (26.366509, 0.001738599)
Data Point: (48.329302, 0.0017325399)
Data Point: (88.586679, 0.0017147796)
Data Point: (162.37767, 0.00075235037)
Data Point: (297.63514, 3.3418521e-005)
Data Point: (545.55948, 6.307291e-007)
Data Point: (1,000, 2.3757014e-008)

Estimation Properties
Hyd. K-Function Estimation Method: Fredlund-Xing Function
Volume Water Content Function: Matl. 3 Shallow Alluvial Deposits
Hydraulic K Sat: 0.00174 ft/sec
Residual Water Content: 0.0495 ft^3/ft^3
Maximum: 1,000
Minimum: 0.01
Num. Points: 20

Vol. Water Content Functions

Matl. 3 Shallow Alluvial Deposits

Model: Vol WC Data Point Function
Function: Vol. Water Content vs. Pore-Water Pressure
Mv: 2.5e-006 /psf
Saturated Water Content: 0.30020276 ft^3/ft^3
Residual Water Content: 0.030020276 ft^3/ft^3
Curve Fit to Data: 100 %
Segment Curvature: 40 %
Porosity: 0.30020276
Data Points: Matric Suction (psf), Vol. Water Content (ft^3/ft^3)
Data Point: (0.01, 0.29987196)
Data Point: (0.018329807, 0.29987196)
Data Point: (0.033598183, 0.29987196)
Data Point: (0.061584821, 0.29987196)
Data Point: (0.11288379, 0.29987196)
Data Point: (0.20691381, 0.29987196)
Data Point: (0.37926902, 0.29987196)
Data Point: (0.6951928, 0.29987196)
Data Point: (1.274275, 0.29987196)

Data Point: (2.3357215, 0.29987196)
Data Point: (4.2813324, 0.29987196)
Data Point: (7.8475997, 0.29987196)
Data Point: (14.384499, 0.29987196)
Data Point: (26.366509, 0.29987196)
Data Point: (48.329302, 0.29987196)
Data Point: (88.586679, 0.29667682)
Data Point: (162.37767, 0.20150036)
Data Point: (297.63514, 0.085811521)
Data Point: (545.55948, 0.049379583)
Data Point: (1,000, 0.039446735)

Estimation Properties

Vol. WC Estimation Method: Grain Size Function
Saturated Water Content: 0.3 ft^3/ft^3
Sample Material: Clay
Liquid Limit: 0 %
Diameter at 10% passing: 0.07000000000000001
Diameter at 60% passing: 0.2
Maximum: 1,000
Minimum: 0.01
Num. Points: 20

Matl. 1 Embankment Fill from Borrow Areas

Model: Vol WC Data Point Function
Function: Vol. Water Content vs. Pore-Water Pressure

Mv: 2.5e-006 /psf
Saturated Water Content: 0.30020276 ft^3/ft^3
Residual Water Content: 0.030020276 ft^3/ft^3
Curve Fit to Data: 100 %
Segment Curvature: 40 %

Porosity: 0.30020276
Data Points: Matric Suction (psf), Vol. Water Content (ft^3/ft^3)

Data Point: (0.01, 0.29987196)
Data Point: (0.018329807, 0.29987196)
Data Point: (0.033598183, 0.29987196)
Data Point: (0.061584821, 0.29987196)
Data Point: (0.11288379, 0.29987196)
Data Point: (0.20691381, 0.29987196)
Data Point: (0.37926902, 0.29987196)
Data Point: (0.6951928, 0.29987196)
Data Point: (1.274275, 0.29987196)
Data Point: (2.3357215, 0.29987196)
Data Point: (4.2813324, 0.29987196)
Data Point: (7.8475997, 0.29987196)
Data Point: (14.384499, 0.29987196)
Data Point: (26.366509, 0.29987196)
Data Point: (48.329302, 0.29987196)
Data Point: (88.586679, 0.29667682)

Data Point: (162.37767, 0.20150036)
Data Point: (297.63514, 0.085811521)
Data Point: (545.55948, 0.049379583)
Data Point: (1,000, 0.039446735)

Estimation Properties

Vol. WC Estimation Method: Grain Size Function
Saturated Water Content: 0.3 ft^3/ft^3
Sample Material: Clay
Liquid Limit: 0 %
Diameter at 10% passing: 0.07000000000000001
Diameter at 60% passing: 0.2
Maximum: 1,000
Minimum: 0.01
Num. Points: 20

Matl. 2 Surficial Overburden Layer

Model: Vol WC Data Point Function
Function: Vol. Water Content vs. Pore-Water Pressure

Mv: 2.5e-006 /psf
Saturated Water Content: 0.30132774 ft^3/ft^3
Residual Water Content: 0.030132774 ft^3/ft^3
Curve Fit to Data: 100 %
Segment Curvature: 40 %

Porosity: 0.30132774
Data Points: Matric Suction (psf), Vol. Water Content (ft^3/ft^3)

Data Point: (0.01, 0.30110223)
Data Point: (0.018329807, 0.30110223)
Data Point: (0.033598183, 0.30110223)
Data Point: (0.061584821, 0.30110223)
Data Point: (0.11288379, 0.30110223)
Data Point: (0.20691381, 0.30110223)
Data Point: (0.37926902, 0.30110223)
Data Point: (0.6951928, 0.30110223)
Data Point: (1.274275, 0.30110223)
Data Point: (2.3357215, 0.30110223)
Data Point: (4.2813324, 0.30110223)
Data Point: (7.8475997, 0.30110223)
Data Point: (14.384499, 0.30110223)
Data Point: (26.366509, 0.30110223)
Data Point: (48.329302, 0.30110223)
Data Point: (88.586679, 0.29938489)
Data Point: (162.37767, 0.21986255)
Data Point: (297.63514, 0.094851578)
Data Point: (545.55948, 0.051777012)
Data Point: (1,000, 0.040605935)

Estimation Properties

Vol. WC Estimation Method: Grain Size Function
Saturated Water Content: 0.3 ft^3/ft^3

Sample Material: Clay
Liquid Limit: 0 %
Diameter at 10% passing: 0.07000000000000001
Diameter at 60% passing: 0.18
Maximum: 1,000
Minimum: 0.01
Num. Points: 20

Matl. 4 Deeper Marine Deposits

Model: Vol WC Data Point Function
Function: Vol. Water Content vs. Pore-Water Pressure
Mv: 2.5e-006 /psf
Saturated Water Content: 0.30154597 ft^3/ft^3
Residual Water Content: 0.030154597 ft^3/ft^3
Curve Fit to Data: 100 %
Segment Curvature: 40 %
Porosity: 0.30154597
Data Points: Matric Suction (psf), Vol. Water Content (ft^3/ft^3)
Data Point: (0.01, 0.30100508)
Data Point: (0.018329807, 0.30100508)
Data Point: (0.033598183, 0.30100508)
Data Point: (0.061584821, 0.30100508)
Data Point: (0.11288379, 0.30100508)
Data Point: (0.20691381, 0.30100508)
Data Point: (0.37926902, 0.30100508)
Data Point: (0.6951928, 0.30100508)
Data Point: (1.274275, 0.30100508)
Data Point: (2.3357215, 0.30100508)
Data Point: (4.2813324, 0.30100508)
Data Point: (7.8475997, 0.30100508)
Data Point: (14.384499, 0.30100508)
Data Point: (26.366509, 0.30100508)
Data Point: (48.329302, 0.30100508)
Data Point: (88.586679, 0.30100508)
Data Point: (162.37767, 0.2887592)
Data Point: (297.63514, 0.17412515)
Data Point: (545.55948, 0.076942285)
Data Point: (1,000, 0.051397358)
Estimation Properties
Vol. WC Estimation Method: Grain Size Function
Saturated Water Content: 0.3 ft^3/ft^3
Sample Material: Clay
Liquid Limit: 0 %
Diameter at 10% passing: 0.06
Diameter at 60% passing: 0.11
Maximum: 1,000
Minimum: 0.01
Num. Points: 20

Points

	X (ft)	Y (ft)
Point 1	-183	15
Point 2	-138	30
Point 3	-124	30
Point 4	-100	22
Point 5	-70.1	22
Point 6	-49	15
Point 7	49	15
Point 8	70	22
Point 9	100	22
Point 10	124	30
Point 11	138	30
Point 12	183	15
Point 13	-183	13.5
Point 14	-44.5	13.5
Point 15	-183	-14.5
Point 16	-44.5	-14.5
Point 17	-183	-114.5
Point 18	-44.5	-114.5
Point 19	44.5	-14.5
Point 20	44.5	13.5
Point 21	25	7
Point 22	-25	7
Point 23	44.5	-114.5
Point 24	183	13.5
Point 25	183	-14.5
Point 26	183	-114.5
Point 27	-64	19.9763
Point 28	64	20
Point 29	-174	18
Point 30	174	18
Point 31	1,200	15
Point 32	1,200	13.5
Point 33	1,200	-14.5

Point 34	1,200	-114.5
Point 35	-1,200	15
Point 36	-1,200	13.5
Point 37	-1,200	-14.5
Point 38	-1,200	-114.5
Point 39	-34.2	10.0667
Point 40	34.2	10.0667

Lines

	Start Point	End Point	Hydraulic Boundary
Line 1	2	3	
Line 2	3	4	
Line 3	4	5	
Line 4	6	1	
Line 5	8	9	
Line 6	9	10	
Line 7	10	11	
Line 8	12	7	
Line 9	1	13	
Line 10	13	14	
Line 11	14	6	Drainage
Line 12	13	15	
Line 13	15	16	
Line 14	16	14	
Line 15	15	17	
Line 16	17	18	
Line 17	18	16	
Line 18	16	19	
Line 19	19	20	
Line 20	21	22	Groundwater at Elev. 10ft
Line 21	19	23	
Line 22	23	18	
Line 23	20	7	Drainage
Line 24	12	24	
Line 25	24	20	

Line 26	24	25	
Line 27	25	19	
Line 28	25	26	
Line 29	26	23	
Line 30	5	27	Drainage
Line 31	27	6	Drainage
Line 32	7	28	Drainage
Line 33	28	8	Drainage
Line 34	1	29	Drainage
Line 35	29	2	Drainage
Line 36	11	30	Drainage
Line 37	30	12	Drainage
Line 38	12	31	Groundwater at Elev. 10ft
Line 39	31	32	
Line 40	32	24	
Line 41	32	33	
Line 42	33	25	
Line 43	33	34	
Line 44	34	26	
Line 45	35	1	Groundwater at Elev. 10ft
Line 46	13	36	
Line 47	36	35	
Line 48	15	37	
Line 49	37	36	
Line 50	17	38	
Line 51	38	37	
Line 52	22	39	Groundwater at Elev. 10ft
Line 53	39	14	Drainage
Line 54	20	40	Drainage
Line 55	40	21	Groundwater at Elev. 10ft

Regions

	Material	Points	Area (ft²)
Region 1	Matl. 1 - Embankment Material	1,29,2,3,4,5,27,6	1,094.6
Region 2	Matl. 1 - Embankment Material	7,28,8,9,10,11,30,12	1,095

Region 3	Matl. 2 - Surficial Overburden Layer	1,13,14,6	204.38
Region 4	Matl. 3 - Shallow Alluvial Deposits	13,15,16,14	3,878
Region 5	Matl. 4 - Deeper Marine Deposits	15,17,18,16	13,850
Region 6	Matl. 3 - Shallow Alluvial Deposits	14,16,19,20,40,21,22,39	2,040.3
Region 7	Matl. 4 - Deeper Marine Deposits	16,19,23,18	8,900
Region 8	Matl. 2 - Surficial Overburden Layer	20,7,12,24	204.38
Region 9	Matl. 3 - Shallow Alluvial Deposits	20,24,25,19	3,878
Region 10	Matl. 4 - Deeper Marine Deposits	19,25,26,23	13,850
Region 11	Matl. 2 - Surficial Overburden Layer	12,31,32,24	1,525.5
Region 12	Matl. 3 - Shallow Alluvial Deposits	24,32,33,25	28,476
Region 13	Matl. 4 - Deeper Marine Deposits	25,33,34,26	1.017e+005
Region 14	Matl. 2 - Surficial Overburden Layer	35,1,13,36	1,525.5
Region 15	Matl. 3 - Shallow Alluvial Deposits	36,13,15,37	28,476
Region 16	Matl. 4 - Deeper Marine Deposits	37,15,17,38	1.017e+005

Steady-State Seepage (LT SSS)

Report generated using GeoStudio 2012. Copyright © 1991-2013 GEO-SLOPE International Ltd.

File Information

Title: LOWP PIR Analysis Section B
Created By: Viessman, Michael W CIV USARMY CESAJ (US)
Last Edited By: Viessman, Michael W CIV USARMY CESAJ (US)
Revision Number: 553
File Version: 8.2
Tool Version: 8.12.3.7901
Date: 8/26/2018
Time: 10:11:31 PM
File Name: PR Outlet to C38.gsz
Directory: C:\Users\k3engmwv\Documents\LOWP\FY17-18 PIR Work\SEEP and SLOPEW Files\
Last Solved Date: 8/26/2018
Last Solved Time: 9:11:42 PM

Project Settings

Length(L) Units: feet
Time(t) Units: Seconds
Force(F) Units: lbf
Pressure(p) Units: psf
Mass(M) Units: lbs
Mass Flux Units: lbs/sec
Unit Weight of Water: 62.4 pcf
View: 2D
Element Thickness: 1

Analysis Settings

Steady-State Seepage (LT SSS)

Description: PR outlet to C-38
Kind: SEEP/W
Method: Steady-State
Settings
    Include Air Flow: No
Control
    Apply Runoff: Yes
Convergence
    Maximum Number of Iterations: 1,000
    Minimum Pressure Head Difference: 0.005
    Significant Digits: 2

Max # of Reviews: 10
Hydraulic Under-Relaxation Criteria
Under-Relaxation Initial Rate: 1
Under-Relaxation Min. Rate: 0.1
Under-Relaxation Reduction Rate: 0.65
Under-Relaxation Iterations: 10
Equation Solver: Parallel Direct
Time
Starting Time: 0 sec
Duration: 0 sec
Ending Time: 0 sec

Materials

Matl. 1 - Embankment Material

Model: Saturated / Unsaturated
Hydraulic
K-Function: Matl. 1 Embankment Material
Ky'/Kx' Ratio: 0.25
Rotation: 0 °
Vol. WC. Function: Matl. 1 Embankment Fill from Borrow Areas

Matl. 2 - Surficial Overburden Layer

Model: Saturated / Unsaturated
Hydraulic
K-Function: Matl. 2 Surficial Overburden Layer
Ky'/Kx' Ratio: 0.1
Rotation: 0 °
Vol. WC. Function: Matl. 2 Surficial Overburden Layer

Matl. 3 - Shallow Alluvial Deposits

Model: Saturated / Unsaturated
Hydraulic
K-Function: Matl. 3 Shallow Alluvial Deposits
Ky'/Kx' Ratio: 0.1
Rotation: 0 °
Vol. WC. Function: Matl. 3 Shallow Alluvial Deposits

Matl. 4 - Deeper Marine Deposits

Model: Saturated / Unsaturated
Hydraulic
K-Function: Matl. 4 Deeper Marine Deposits
Ky'/Kx' Ratio: 0.1
Rotation: 0 °
Vol. WC. Function: Matl. 4 Deeper Marine Deposits

Boundary Conditions

PR at Elev. 18ft

Type: Head (H) 18
Review: No

Drainage

Type: Total Flux (Q) 0
Review: Yes

Canal at Elev. 20ft

Type: Head (H) 20
Review: No

Flux Sections

Flux Section 1

Coordinates
Coordinate: (-130.4, 30) ft
Coordinate: (-130.5, -114.7) ft

K Functions

Matl. 1 Embankment Material

Model: Hyd K Data Point Function
Function: X-Conductivity vs. Pore-Water Pressure
Curve Fit to Data: 100 %
Segment Curvature: 36 %
K-Saturation: 0.000131
Data Points: Matric Suction (psf), X-Conductivity (ft/sec)
Data Point: (0.01, 0.000131)
Data Point: (0.018329807, 0.00013099927)
Data Point: (0.033598183, 0.00013099852)
Data Point: (0.061584821, 0.00013099772)
Data Point: (0.11288379, 0.00013099684)
Data Point: (0.20691381, 0.00013099581)
Data Point: (0.37926902, 0.0001309945)
Data Point: (0.6951928, 0.00013099268)
Data Point: (1.274275, 0.00013098992)
Data Point: (2.3357215, 0.00013098549)
Data Point: (4.2813324, 0.0001309777)
Data Point: (7.8475997, 0.00013096339)
Data Point: (14.384499, 0.00013094955)
Data Point: (26.366509, 0.00013089452)

Data Point: (48.329302, 0.00013043835)
Data Point: (88.586679, 0.00012910123)
Data Point: (162.37767, 5.664247e-005)
Data Point: (297.63514, 2.5159921e-006)
Data Point: (545.55948, 4.7485927e-008)
Data Point: (1,000, 1.7886028e-009)

Estimation Properties

Hyd. K-Function Estimation Method: Fredlund-Xing Function
Volume Water Content Function: Matl. 1 Embankment Fill from Borrow Areas
Hydraulic K Sat: 0.000131 ft/sec
Residual Water Content: 0.0495 ft^3/ft^3
Maximum: 1,000
Minimum: 0.01
Num. Points: 20

Matl. 4 Deeper Marine Deposits

Model: Hyd K Data Point Function
Function: X-Conductivity vs. Pore-Water Pressure

Curve Fit to Data: 100 %
Segment Curvature: 44 %

K-Saturation: 0.000984
Data Points: Matric Suction (psf), X-Conductivity (ft/sec)

Data Point: (0.01, 0.000984)
Data Point: (0.018329807, 0.00098398585)
Data Point: (0.033598183, 0.00098397151)
Data Point: (0.061584821, 0.00098395679)
Data Point: (0.11288379, 0.00098394139)
Data Point: (0.20691381, 0.00098392476)
Data Point: (0.37926902, 0.00098390584)
Data Point: (0.6951928, 0.00098388274)
Data Point: (1.274275, 0.00098385199)
Data Point: (2.3357215, 0.0009838074)
Data Point: (4.2813324, 0.00098373618)
Data Point: (7.8475997, 0.00098361453)
Data Point: (14.384499, 0.0009834543)
Data Point: (26.366509, 0.00098304118)
Data Point: (48.329302, 0.00098089274)
Data Point: (88.586679, 0.00098804841)
Data Point: (162.37767, 0.00089693201)
Data Point: (297.63514, 0.00029836287)
Data Point: (545.55948, 5.5741791e-006)
Data Point: (1,000, 8.8545842e-008)

Estimation Properties

Hyd. K-Function Estimation Method: Fredlund-Xing Function
Volume Water Content Function: Matl. 4 Deeper Marine Deposits
Hydraulic K Sat: 0.000984 ft/sec
Residual Water Content: 0.03 ft^3/ft^3
Maximum: 1,000

Minimum: 0.01
Num. Points: 20

Matl. 2 Surficial Overburden Layer

Model: Hyd K Data Point Function
Function: X-Conductivity vs. Pore-Water Pressure
Curve Fit to Data: 100 %
Segment Curvature: 36 %
K-Saturation: 0.00026
Data Points: Matric Suction (psf), X-Conductivity (ft/sec)
Data Point: (0.01, 0.00026)
Data Point: (0.018329807, 0.00025999835)
Data Point: (0.033598183, 0.00025999664)
Data Point: (0.061584821, 0.00025999485)
Data Point: (0.11288379, 0.00025999288)
Data Point: (0.20691381, 0.00025999062)
Data Point: (0.37926902, 0.00025998779)
Data Point: (0.6951928, 0.00025998393)
Data Point: (1.274275, 0.00025997819)
Data Point: (2.3357215, 0.00025996907)
Data Point: (4.2813324, 0.00025995329)
Data Point: (7.8475997, 0.00025992467)
Data Point: (14.384499, 0.00025989276)
Data Point: (26.366509, 0.00025978642)
Data Point: (48.329302, 0.00025903344)
Data Point: (88.586679, 0.0002586222)
Data Point: (162.37767, 0.00013432217)
Data Point: (297.63514, 8.1547435e-006)
Data Point: (545.55948, 1.3663567e-007)
Data Point: (1,000, 4.5608744e-009)
Estimation Properties
Hyd. K-Function Estimation Method: Fredlund-Xing Function
Volume Water Content Function: Matl. 2 Surficial Overburden Layer
Hydraulic K Sat: 0.00026 ft/sec
Residual Water Content: 0.0495 ft^3/ft^3
Maximum: 1,000
Minimum: 0.01
Num. Points: 20

Matl. 3 Shallow Alluvial Deposits

Model: Hyd K Data Point Function
Function: X-Conductivity vs. Pore-Water Pressure
Curve Fit to Data: 100 %
Segment Curvature: 36 %
K-Saturation: 0.00174
Data Points: Matric Suction (psf), X-Conductivity (ft/sec)
Data Point: (0.01, 0.00174)
Data Point: (0.018329807, 0.0017399903)

Data Point: (0.033598183, 0.0017399803)
Data Point: (0.061584821, 0.0017399698)
Data Point: (0.11288379, 0.0017399581)
Data Point: (0.20691381, 0.0017399444)
Data Point: (0.37926902, 0.0017399269)
Data Point: (0.6951928, 0.0017399027)
Data Point: (1.274275, 0.0017398661)
Data Point: (2.3357215, 0.0017398072)
Data Point: (4.2813324, 0.0017397038)
Data Point: (7.8475997, 0.0017395137)
Data Point: (14.384499, 0.0017393299)
Data Point: (26.366509, 0.001738599)
Data Point: (48.329302, 0.0017325399)
Data Point: (88.586679, 0.0017147796)
Data Point: (162.37767, 0.00075235037)
Data Point: (297.63514, 3.3418521e-005)
Data Point: (545.55948, 6.307291e-007)
Data Point: (1,000, 2.3757014e-008)

Estimation Properties
Hyd. K-Function Estimation Method: Fredlund-Xing Function
Volume Water Content Function: Matl. 3 Shallow Alluvial Deposits
Hydraulic K Sat: 0.00174 ft/sec
Residual Water Content: 0.0495 ft^3/ft^3
Maximum: 1,000
Minimum: 0.01
Num. Points: 20

Vol. Water Content Functions

Matl. 3 Shallow Alluvial Deposits

Model: Vol WC Data Point Function
Function: Vol. Water Content vs. Pore-Water Pressure
Mv: 2.5e-006 /psf
Saturated Water Content: 0.30020276 ft^3/ft^3
Residual Water Content: 0.030020276 ft^3/ft^3
Curve Fit to Data: 100 %
Segment Curvature: 40 %
Porosity: 0.30020276
Data Points: Matric Suction (psf), Vol. Water Content (ft^3/ft^3)
Data Point: (0.01, 0.29987196)
Data Point: (0.018329807, 0.29987196)
Data Point: (0.033598183, 0.29987196)
Data Point: (0.061584821, 0.29987196)
Data Point: (0.11288379, 0.29987196)
Data Point: (0.20691381, 0.29987196)
Data Point: (0.37926902, 0.29987196)

Data Point: (0.6951928, 0.29987196)
Data Point: (1.274275, 0.29987196)
Data Point: (2.3357215, 0.29987196)
Data Point: (4.2813324, 0.29987196)
Data Point: (7.8475997, 0.29987196)
Data Point: (14.384499, 0.29987196)
Data Point: (26.366509, 0.29987196)
Data Point: (48.329302, 0.29987196)
Data Point: (88.586679, 0.29667682)
Data Point: (162.37767, 0.20150036)
Data Point: (297.63514, 0.085811521)
Data Point: (545.55948, 0.049379583)
Data Point: (1,000, 0.039446735)

Estimation Properties

Vol. WC Estimation Method: Grain Size Function
Saturated Water Content: 0.3 ft^3/ft^3
Sample Material: Clay
Liquid Limit: 0 %
Diameter at 10% passing: 0.07000000000000001
Diameter at 60% passing: 0.2
Maximum: 1,000
Minimum: 0.01
Num. Points: 20

Matl. 1 Embankment Fill from Borrow Areas

Model: Vol WC Data Point Function
Function: Vol. Water Content vs. Pore-Water Pressure

Mv: 2.5e-006 /psf
Saturated Water Content: 0.30020276 ft^3/ft^3
Residual Water Content: 0.030020276 ft^3/ft^3
Curve Fit to Data: 100 %
Segment Curvature: 40 %

Porosity: 0.30020276
Data Points: Matric Suction (psf), Vol. Water Content (ft^3/ft^3)

Data Point: (0.01, 0.29987196)
Data Point: (0.018329807, 0.29987196)
Data Point: (0.033598183, 0.29987196)
Data Point: (0.061584821, 0.29987196)
Data Point: (0.11288379, 0.29987196)
Data Point: (0.20691381, 0.29987196)
Data Point: (0.37926902, 0.29987196)
Data Point: (0.6951928, 0.29987196)
Data Point: (1.274275, 0.29987196)
Data Point: (2.3357215, 0.29987196)
Data Point: (4.2813324, 0.29987196)
Data Point: (7.8475997, 0.29987196)
Data Point: (14.384499, 0.29987196)
Data Point: (26.366509, 0.29987196)

Data Point: (48.329302, 0.29987196)
Data Point: (88.586679, 0.29667682)
Data Point: (162.37767, 0.20150036)
Data Point: (297.63514, 0.085811521)
Data Point: (545.55948, 0.049379583)
Data Point: (1,000, 0.039446735)

Estimation Properties

Vol. WC Estimation Method: Grain Size Function
Saturated Water Content: 0.3 ft^3/ft^3
Sample Material: Clay
Liquid Limit: 0 %
Diameter at 10% passing: 0.07000000000000001
Diameter at 60% passing: 0.2
Maximum: 1,000
Minimum: 0.01
Num. Points: 20

Matl. 2 Surficial Overburden Layer

Model: Vol WC Data Point Function
Function: Vol. Water Content vs. Pore-Water Pressure

Mv: 2.5e-006 /psf
Saturated Water Content: 0.30132774 ft^3/ft^3
Residual Water Content: 0.030132774 ft^3/ft^3
Curve Fit to Data: 100 %
Segment Curvature: 40 %

Porosity: 0.30132774
Data Points: Matric Suction (psf), Vol. Water Content (ft^3/ft^3)

Data Point: (0.01, 0.30110223)
Data Point: (0.018329807, 0.30110223)
Data Point: (0.033598183, 0.30110223)
Data Point: (0.061584821, 0.30110223)
Data Point: (0.11288379, 0.30110223)
Data Point: (0.20691381, 0.30110223)
Data Point: (0.37926902, 0.30110223)
Data Point: (0.6951928, 0.30110223)
Data Point: (1.274275, 0.30110223)
Data Point: (2.3357215, 0.30110223)
Data Point: (4.2813324, 0.30110223)
Data Point: (7.8475997, 0.30110223)
Data Point: (14.384499, 0.30110223)
Data Point: (26.366509, 0.30110223)
Data Point: (48.329302, 0.30110223)
Data Point: (88.586679, 0.29938489)
Data Point: (162.37767, 0.21986255)
Data Point: (297.63514, 0.094851578)
Data Point: (545.55948, 0.051777012)
Data Point: (1,000, 0.040605935)

Estimation Properties

Vol. WC Estimation Method: Grain Size Function
Saturated Water Content: 0.3 ft^3/ft^3
Sample Material: Clay
Liquid Limit: 0 %
Diameter at 10% passing: 0.07000000000000001
Diameter at 60% passing: 0.18
Maximum: 1,000
Minimum: 0.01
Num. Points: 20

Matl. 4 Deeper Marine Deposits

Model: Vol WC Data Point Function
Function: Vol. Water Content vs. Pore-Water Pressure
Mv: 2.5e-006 /psf
Saturated Water Content: 0.30154597 ft^3/ft^3
Residual Water Content: 0.030154597 ft^3/ft^3
Curve Fit to Data: 100 %
Segment Curvature: 40 %
Porosity: 0.30154597
Data Points: Matric Suction (psf), Vol. Water Content (ft^3/ft^3)
Data Point: (0.01, 0.30100508)
Data Point: (0.018329807, 0.30100508)
Data Point: (0.033598183, 0.30100508)
Data Point: (0.061584821, 0.30100508)
Data Point: (0.11288379, 0.30100508)
Data Point: (0.20691381, 0.30100508)
Data Point: (0.37926902, 0.30100508)
Data Point: (0.6951928, 0.30100508)
Data Point: (1.274275, 0.30100508)
Data Point: (2.3357215, 0.30100508)
Data Point: (4.2813324, 0.30100508)
Data Point: (7.8475997, 0.30100508)
Data Point: (14.384499, 0.30100508)
Data Point: (26.366509, 0.30100508)
Data Point: (48.329302, 0.30100508)
Data Point: (88.586679, 0.30100508)
Data Point: (162.37767, 0.2887592)
Data Point: (297.63514, 0.17412515)
Data Point: (545.55948, 0.076942285)
Data Point: (1,000, 0.051397358)
Estimation Properties
Vol. WC Estimation Method: Grain Size Function
Saturated Water Content: 0.3 ft^3/ft^3
Sample Material: Clay
Liquid Limit: 0 %
Diameter at 10% passing: 0.06
Diameter at 60% passing: 0.11
Maximum: 1,000

Minimum: 0.01
Num. Points: 20

Points

	X (ft)	Y (ft)
Point 1	-183	15
Point 2	-138	30
Point 3	-124	30
Point 4	-100	22
Point 5	-70.1	22
Point 6	-49	15
Point 7	49	15
Point 8	70	22
Point 9	100	22
Point 10	124	30
Point 11	138	30
Point 12	183	15
Point 13	-183	13.5
Point 14	-44.5	13.5
Point 15	-183	-14.5
Point 16	-44.5	-14.5
Point 17	-183	-114.5
Point 18	-44.5	-114.5
Point 19	44.5	-14.5
Point 20	44.5	13.5
Point 21	25	7
Point 22	-25	7
Point 23	44.5	-114.5
Point 24	183	13.5
Point 25	183	-14.5
Point 26	183	-114.5
Point 27	-64	19.9763
Point 28	64	20
Point 29	-174	18
Point 30	174	18
Point 31	1,200	15

Point 32	1,200	13.5
Point 33	1,200	-14.5
Point 34	1,200	-114.5
Point 35	-1,200	15
Point 36	-1,200	13.5
Point 37	-1,200	-14.5
Point 38	-1,200	-114.5
Point 39	-34.2	10.0667
Point 40	34.2	10.0667

Lines

	Start Point	End Point	Hydraulic Boundary
Line 1	2	3	
Line 2	3	4	
Line 3	4	5	
Line 4	6	1	
Line 5	8	9	
Line 6	9	10	
Line 7	10	11	
Line 8	12	7	
Line 9	1	13	
Line 10	13	14	
Line 11	14	6	Canal at Elev. 20ft
Line 12	13	15	
Line 13	15	16	
Line 14	16	14	
Line 15	15	17	
Line 16	17	18	
Line 17	18	16	
Line 18	16	19	
Line 19	19	20	
Line 20	21	22	Canal at Elev. 20ft
Line 21	19	23	
Line 22	23	18	
Line 23	20	7	Canal at Elev. 20ft

Line 24	12	24	
Line 25	24	20	
Line 26	24	25	
Line 27	25	19	
Line 28	25	26	
Line 29	26	23	
Line 30	5	27	
Line 31	27	6	Canal at Elev. 20ft
Line 32	7	28	Canal at Elev. 20ft
Line 33	28	8	
Line 34	1	29	PR at Elev. 18ft
Line 35	29	2	Drainage
Line 36	11	30	Drainage
Line 37	30	12	PR at Elev. 18ft
Line 38	12	31	PR at Elev. 18ft
Line 39	31	32	
Line 40	32	24	
Line 41	32	33	
Line 42	33	25	
Line 43	33	34	
Line 44	34	26	
Line 45	35	1	PR at Elev. 18ft
Line 46	13	36	
Line 47	36	35	
Line 48	15	37	
Line 49	37	36	
Line 50	17	38	
Line 51	38	37	
Line 52	22	39	Canal at Elev. 20ft
Line 53	39	14	Canal at Elev. 20ft
Line 54	20	40	Canal at Elev. 20ft
Line 55	40	21	Canal at Elev. 20ft

Regions

	Material	Points	Area (ft²)

Region 1	Matl. 1 - Embankment Material	1,29,2,3,4,5,27,6	1,094.6
Region 2	Matl. 1 - Embankment Material	7,28,8,9,10,11,30,12	1,095
Region 3	Matl. 2 - Surficial Overburden Layer	1,13,14,6	204.38
Region 4	Matl. 3 - Shallow Alluvial Deposits	13,15,16,14	3,878
Region 5	Matl. 4 - Deeper Marine Deposits	15,17,18,16	13,850
Region 6	Matl. 3 - Shallow Alluvial Deposits	14,16,19,20,40,21,22,39	2,040.3
Region 7	Matl. 4 - Deeper Marine Deposits	16,19,23,18	8,900
Region 8	Matl. 2 - Surficial Overburden Layer	20,7,12,24	204.38
Region 9	Matl. 3 - Shallow Alluvial Deposits	20,24,25,19	3,878
Region 10	Matl. 4 - Deeper Marine Deposits	19,25,26,23	13,850
Region 11	Matl. 2 - Surficial Overburden Layer	12,31,32,24	1,525.5
Region 12	Matl. 3 - Shallow Alluvial Deposits	24,32,33,25	28,476
Region 13	Matl. 4 - Deeper Marine Deposits	25,33,34,26	1.017e+005
Region 14	Matl. 2 - Surficial Overburden Layer	35,1,13,36	1,525.5
Region 15	Matl. 3 - Shallow Alluvial Deposits	36,13,15,37	28,476
Region 16	Matl. 4 - Deeper Marine Deposits	37,15,17,38	1.017e+005

SLOPE/W Figures and Results

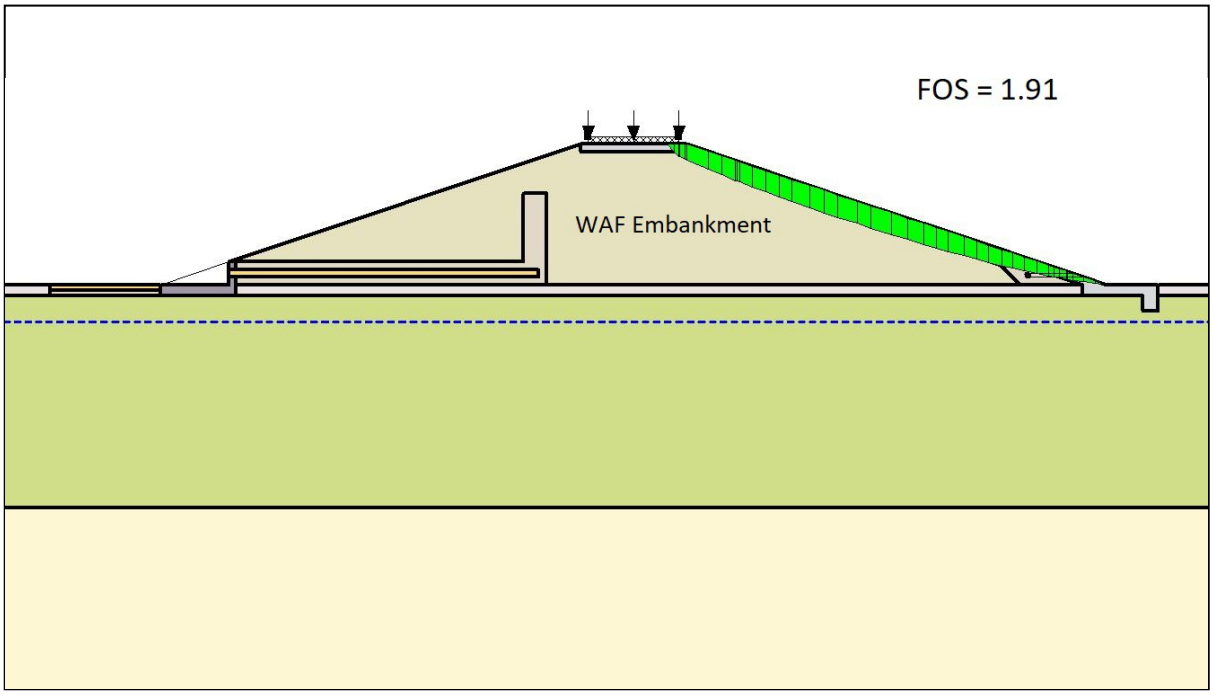

Figure 1: Section 1, EOC Condition, resulting critical failure surface on the U/S slope

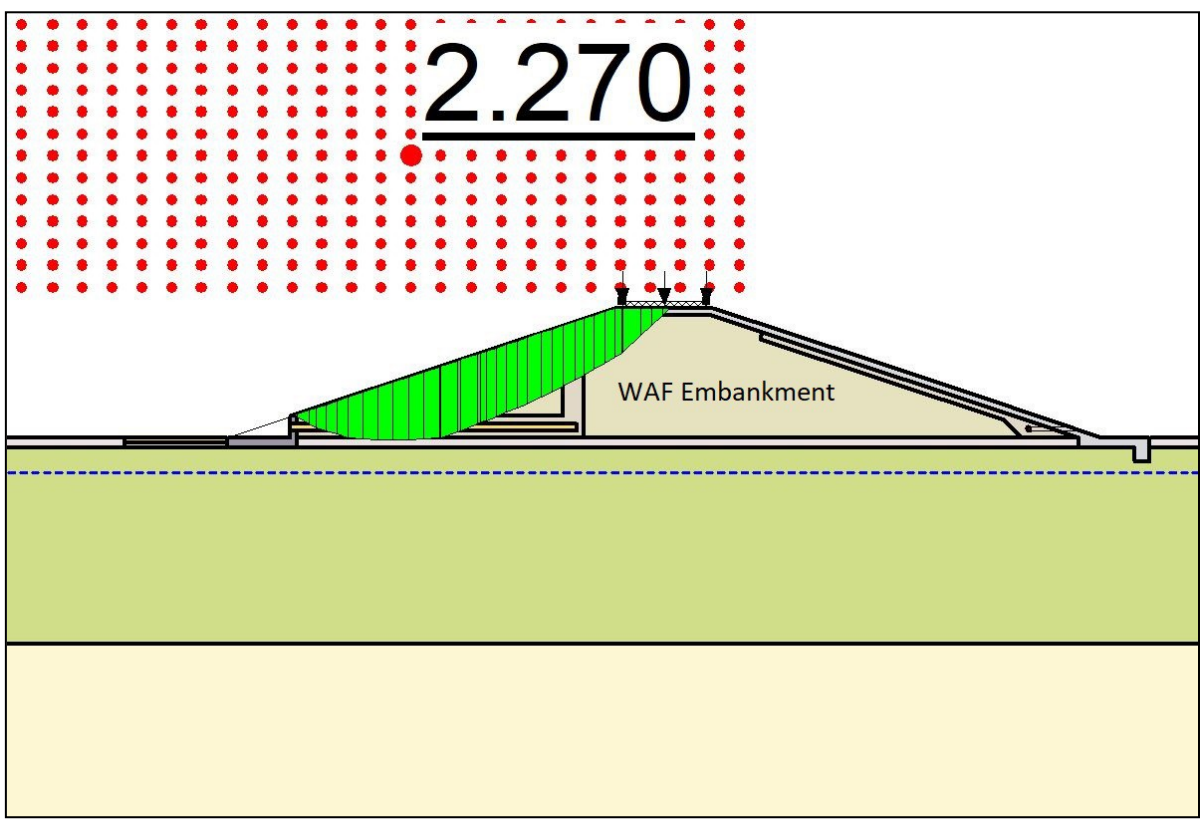

Figure 2: Section 1, EOC Condition, resulting critical failure surface on the D/S slope

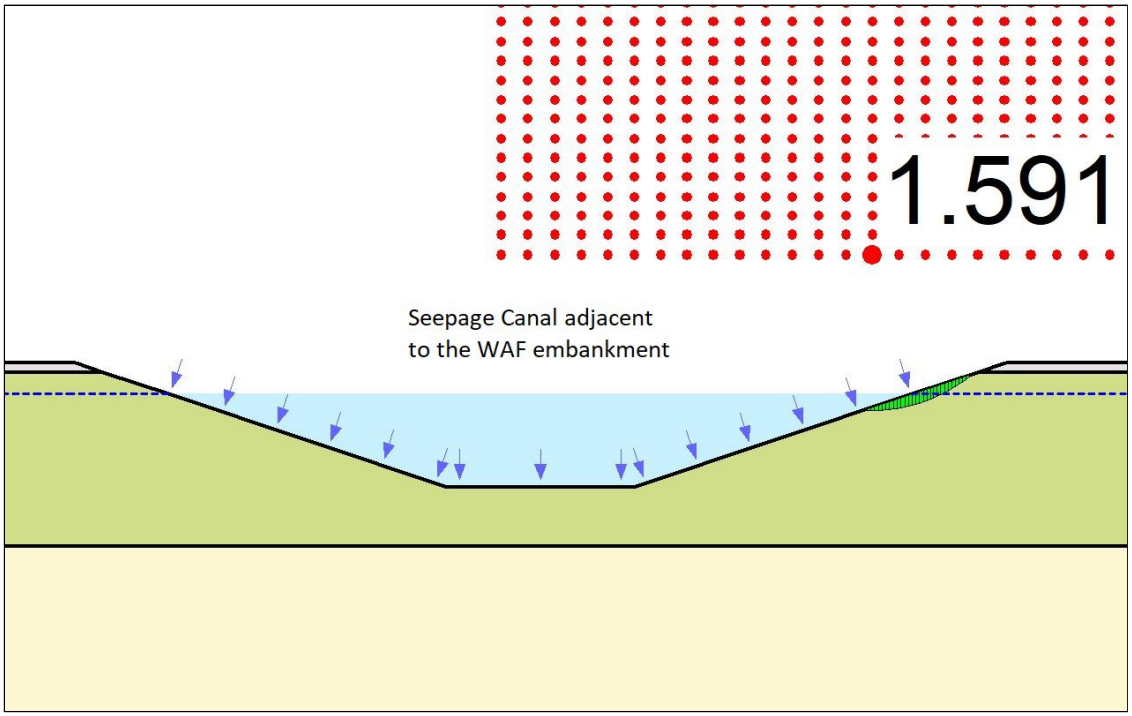

Figure 3: Section 1, EOC Condition, resulting critical failure surface on the canal slope

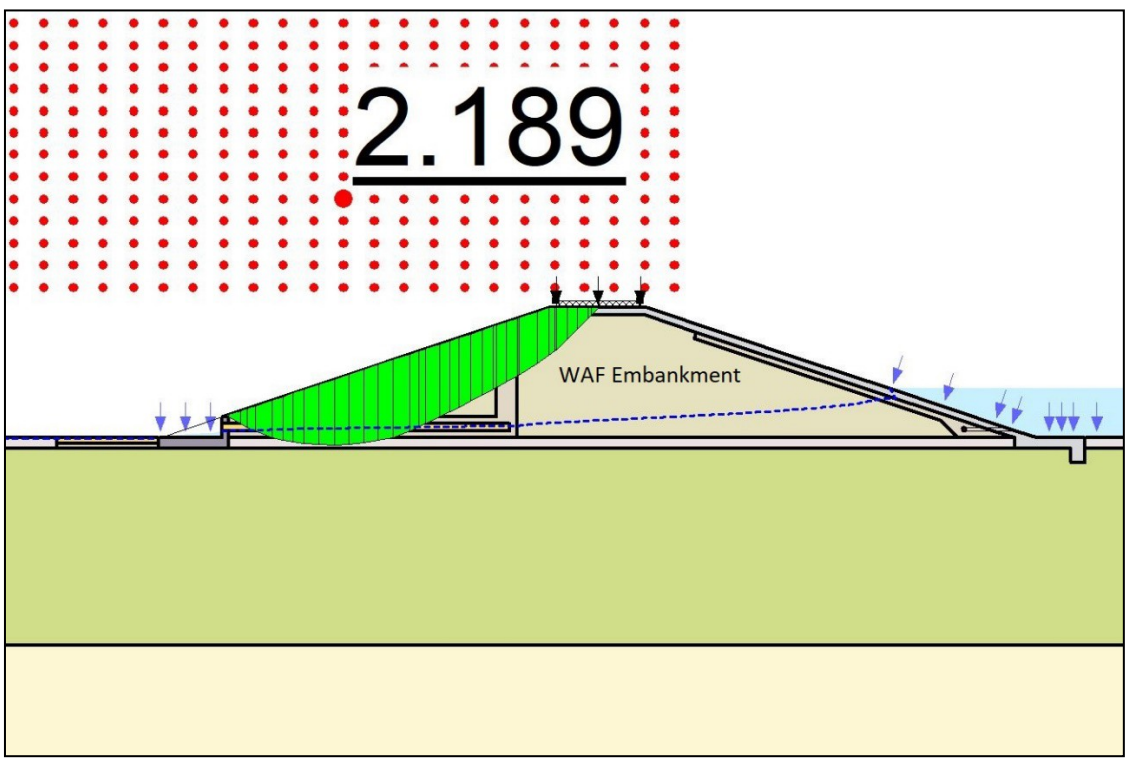

Figure 4: Section 1, Long Term Steady-State-Seepage (LTSSS) Condition, normal pool, resulting critical failure surface on the D/S slope

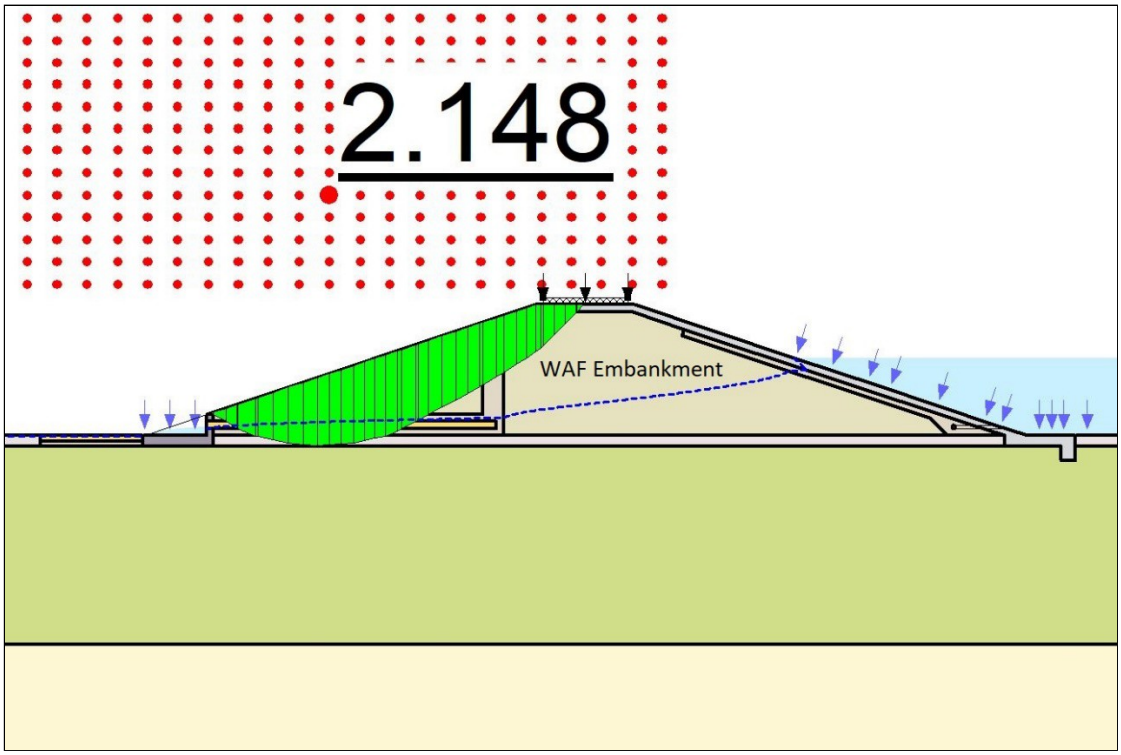

Figure 5: Section 1, LTSSS Condition, maximum surcharge pool, resulting critical failure surface on the D/S slope

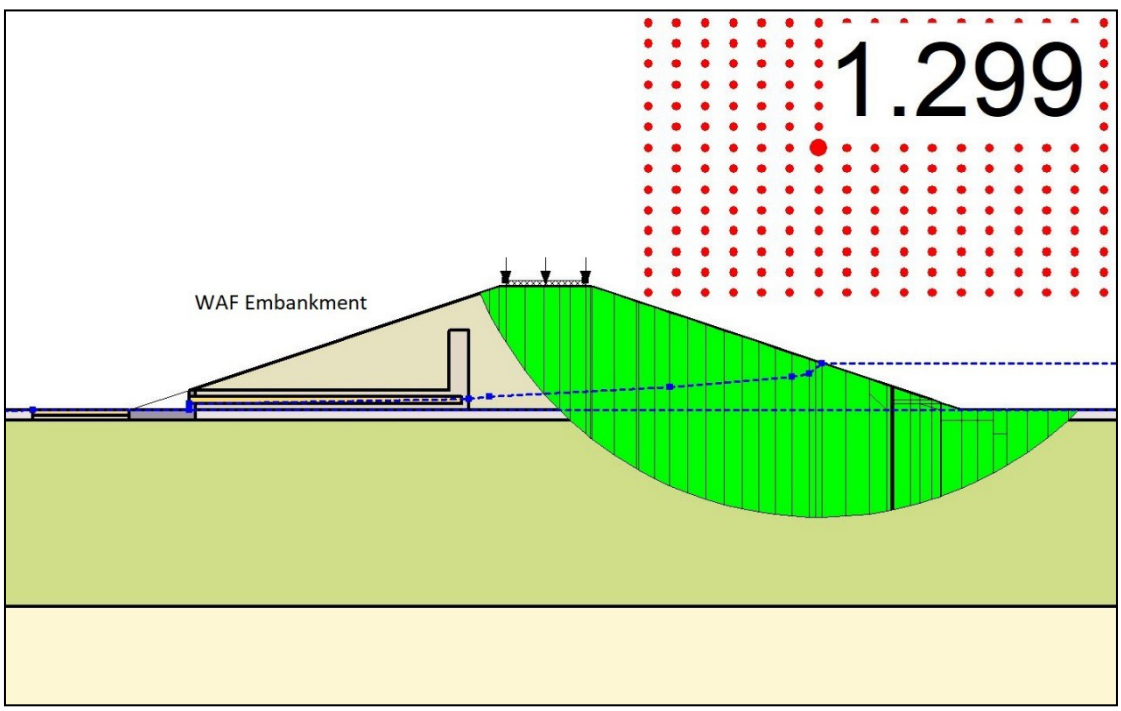

Figure 6: Section 1, Rapid Drawdown (RDD) Condition from normal pool, resulting critical failure surface on the U/S slope

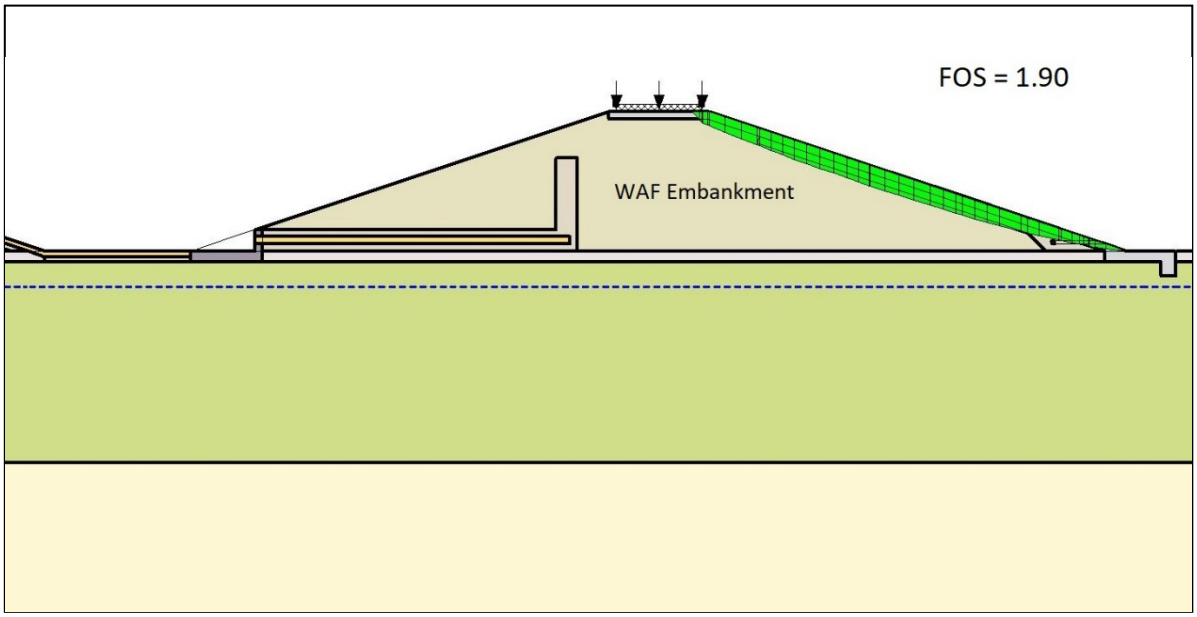

Figure 7: Section 2, EOC Condition, resulting critical failure surface on the U/S slope

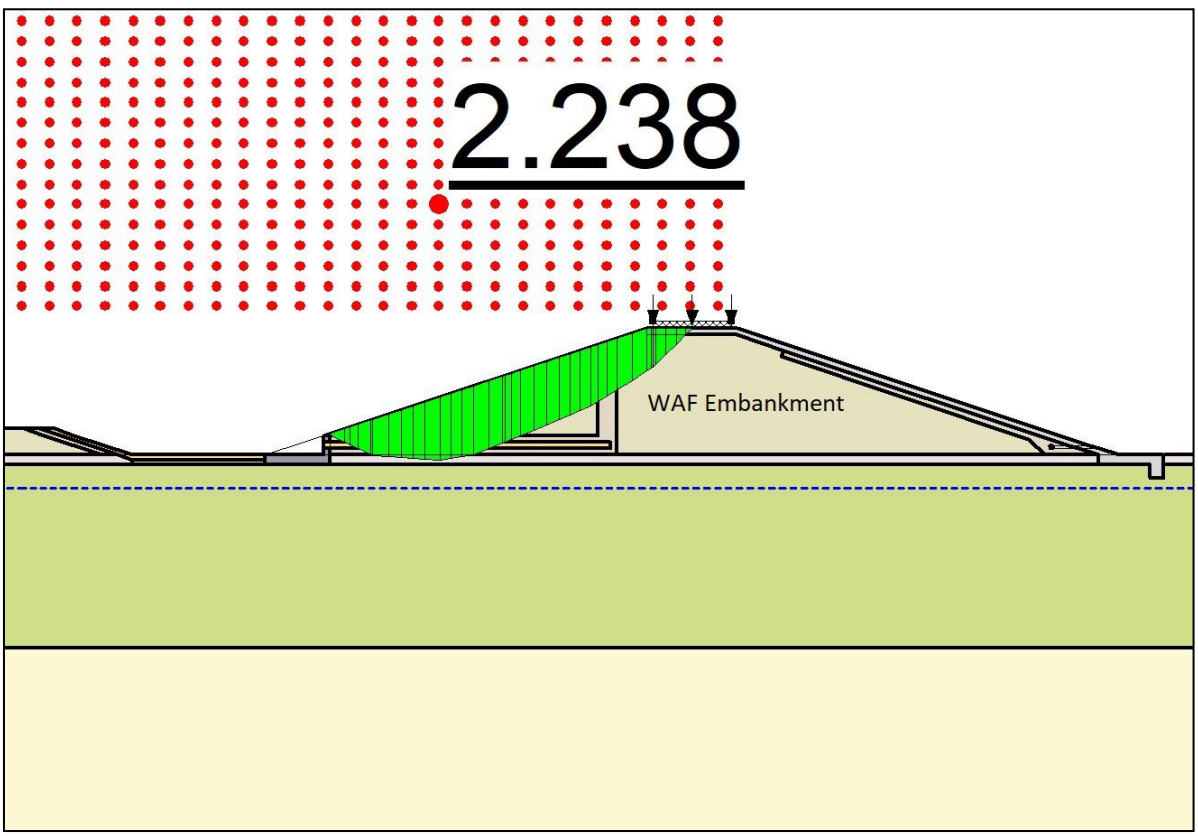

Figure 8: Section 2, EOC Condition, resulting critical failure surface on the D/S slope

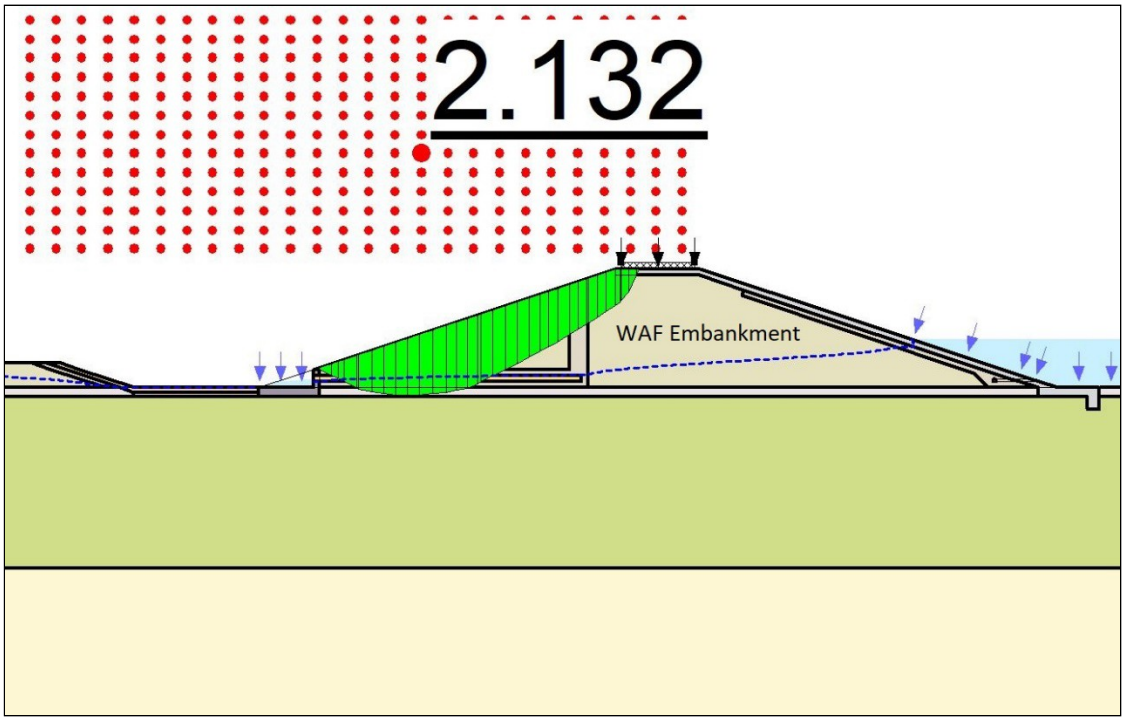

Figure 9: Section 2, LTSSS Condition, normal pool, resulting critical failure surface on the D/S slope

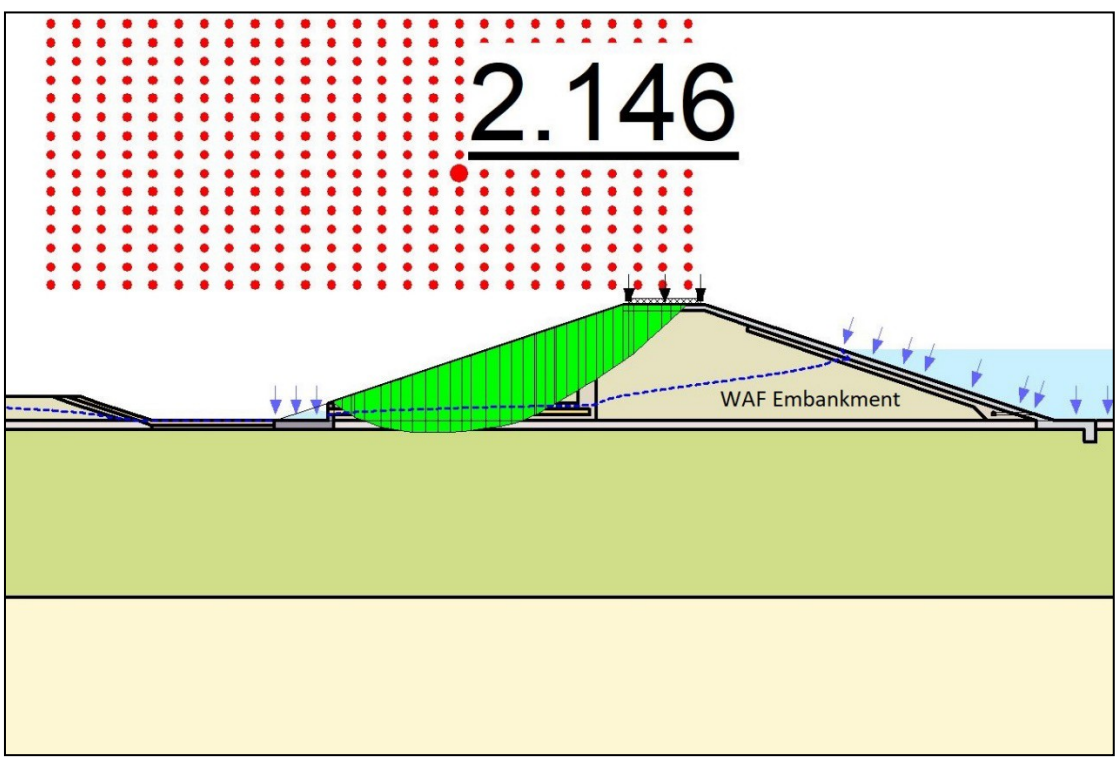

Figure 10: Section 2, LTSSS Condition, maximum surcharge pool, resulting critical failure surface on the D/S slope

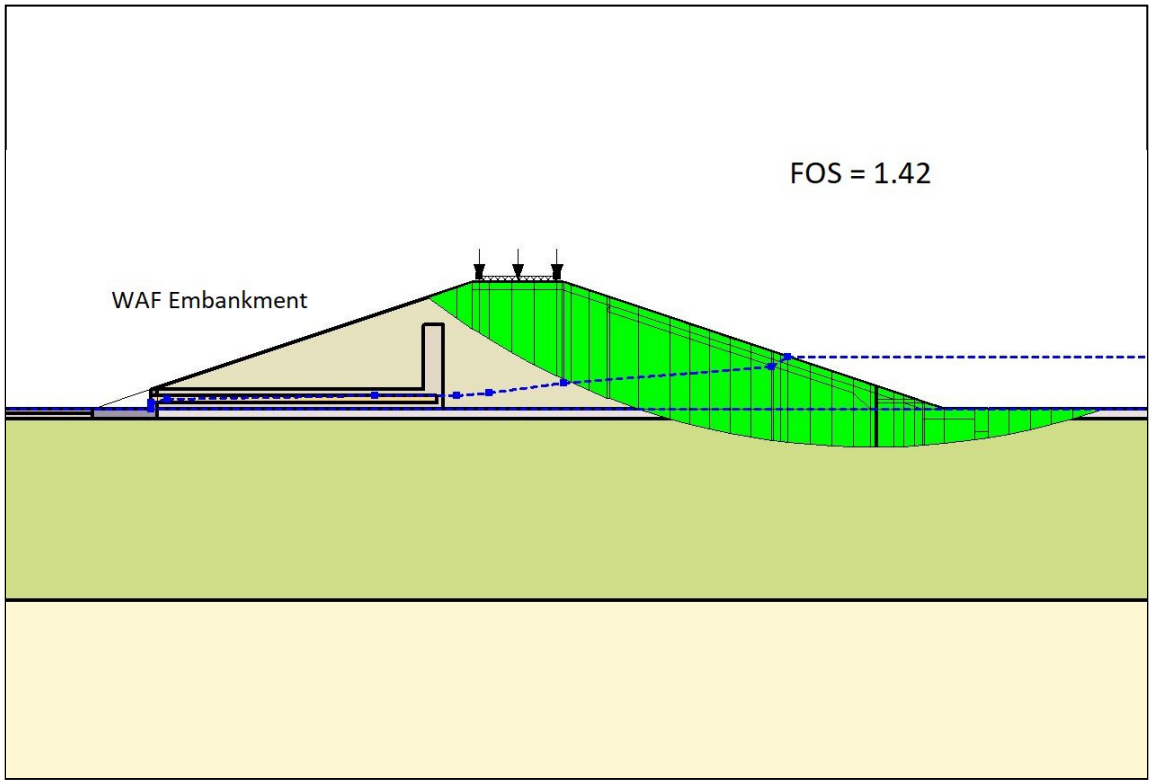

Figure 11: Section 2, RDD Condition from normal pool, resulting critical failure surface on the U/S slope

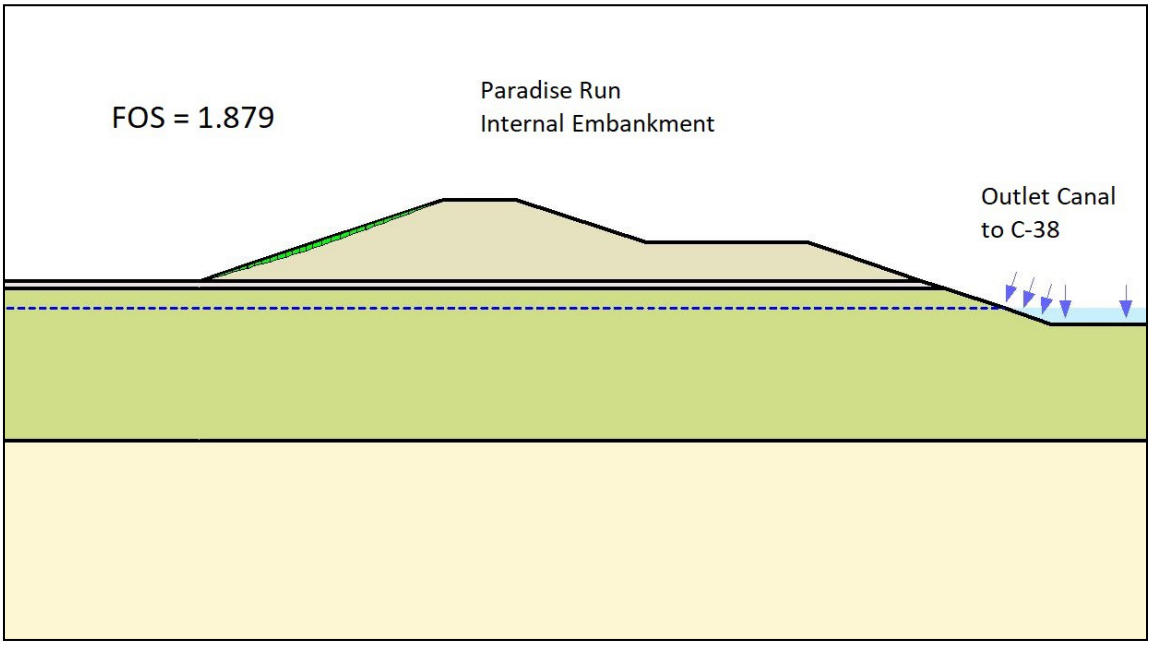

Figure 12: Section 3, EOC Condition, resulting critical failure surface on the exterior slope

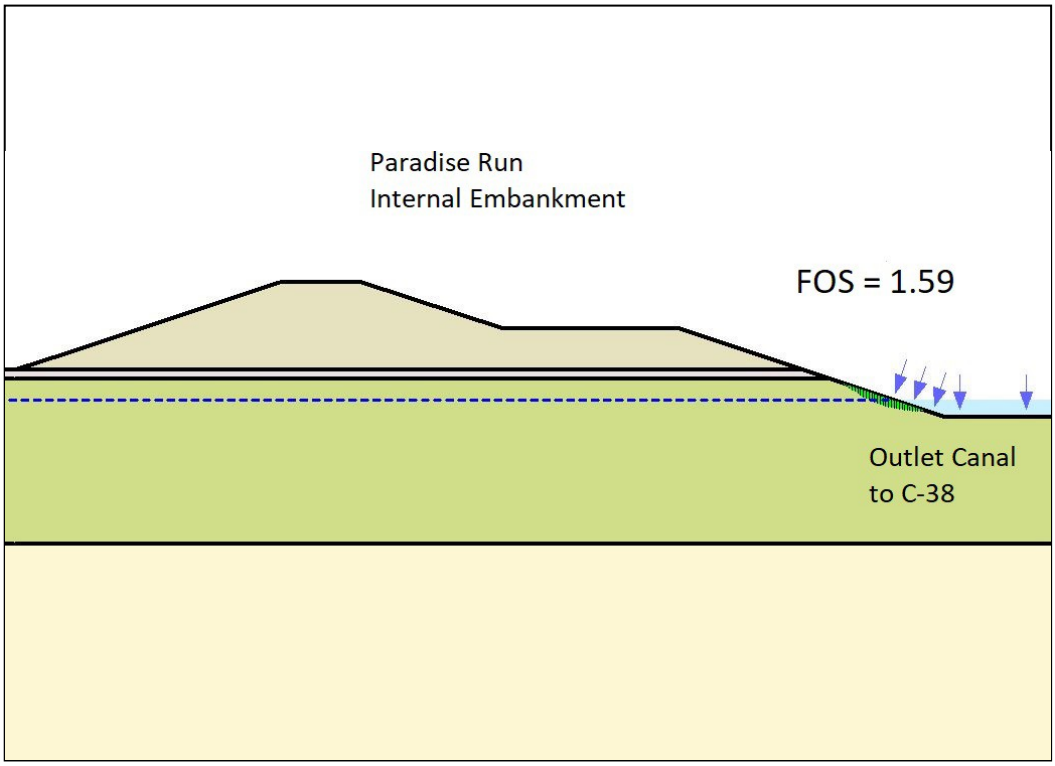

Figure 13: Section 3, EOC Condition, resulting critical failure surface on the interior slope

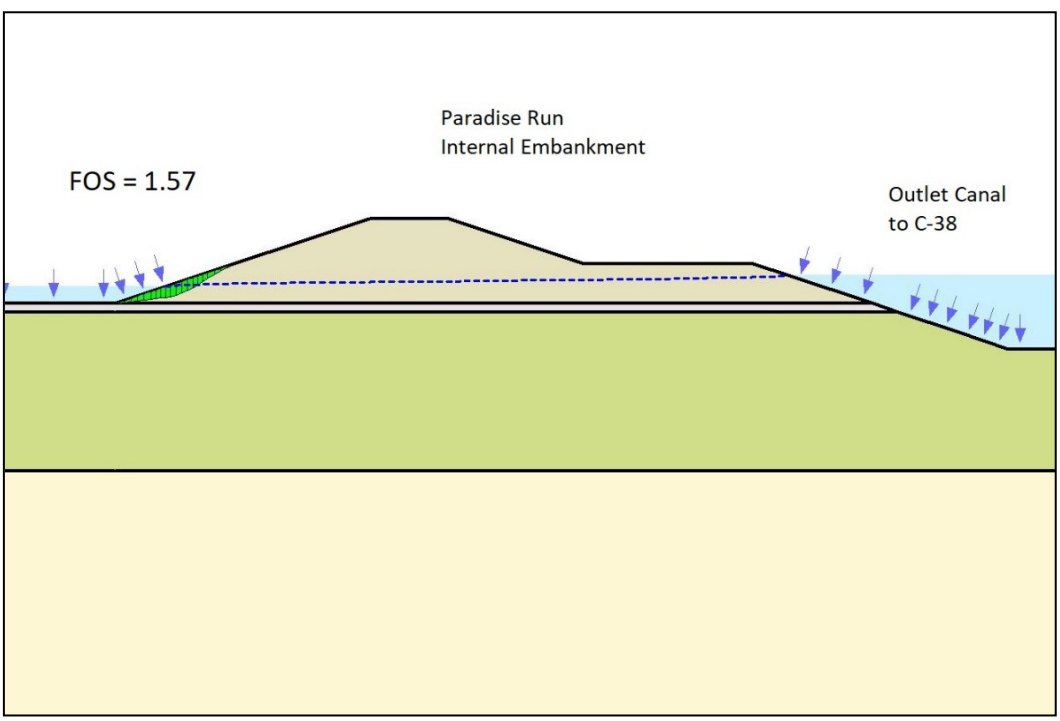

Figure 14: Section 3, LTSSS Condition, resulting critical failure surface on the exterior slope

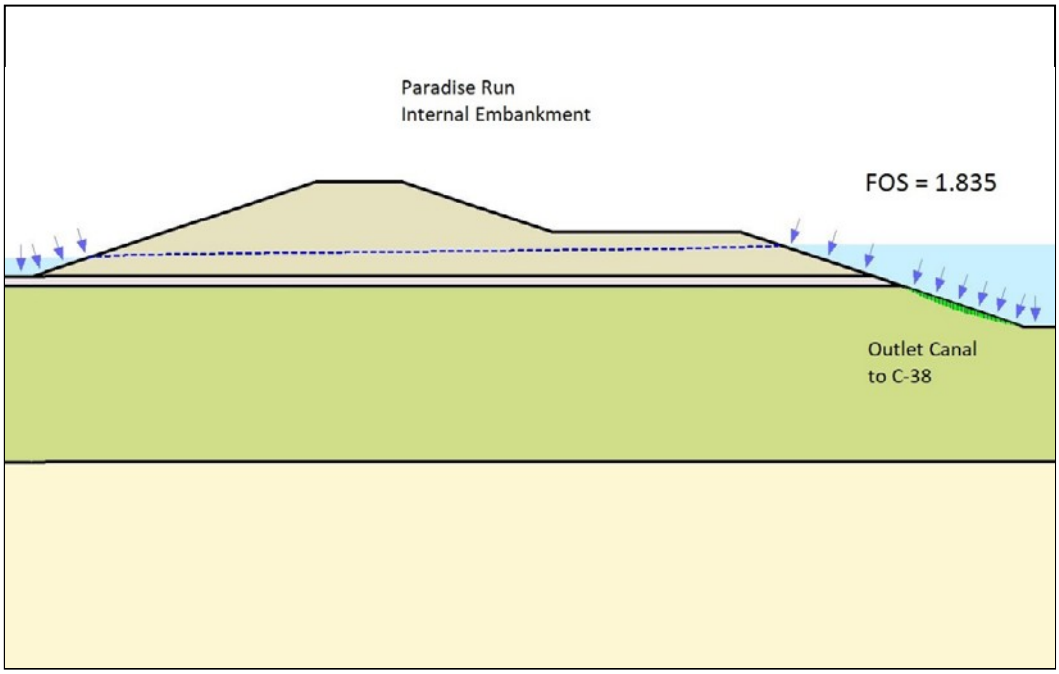

Figure 15: Section 3, LTSSS Condition, resulting critical failure surface on the interior slope

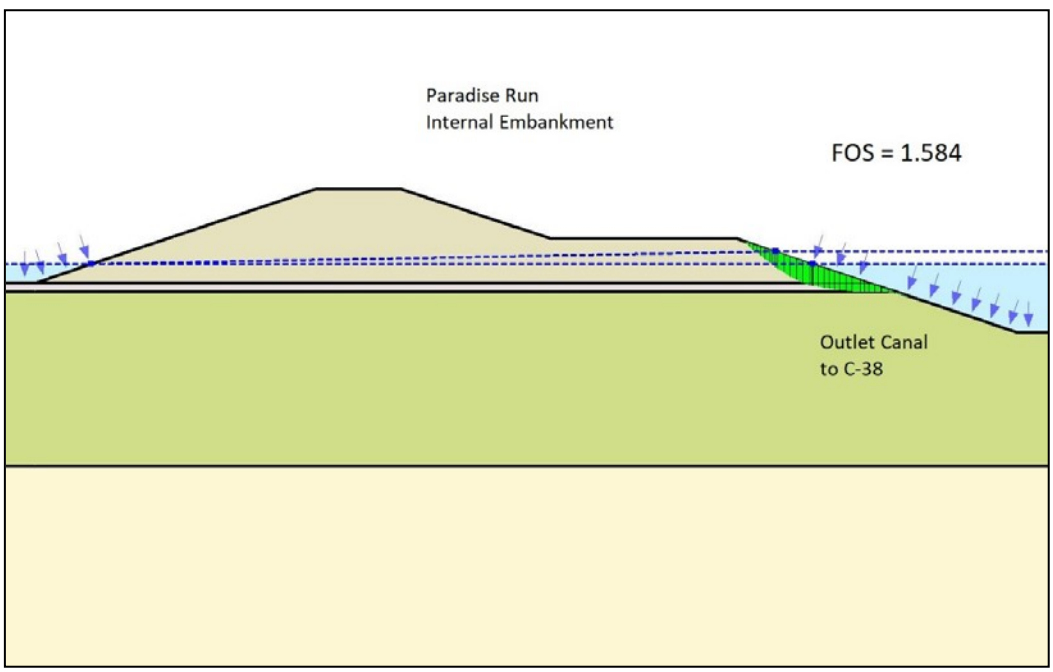

Figure 16: Section 3, RDD Condition, resulting critical failure surface on the interior slope

LOWP Annex B (Geotechnical)				
SLOPE/W Results				
Design Case	**WAF/PR Pool Elevation (ft,NAVD88)**	**Slope**	**Required Factor of Safety (FS)[1]**	**Calculated Factor of Safety (FS)**
SECTION 1				
End-of-Construction (EOC)	No Pool	Upstream	1.3	1.91
End-of-Construction (EOC)	No Pool	Downstream	1.3	2.27
End-of-Construction (EOC)	No Pool	Canal Slope	1.3	1.59
Steady-State - Normal Pool	25	Downstream	1.5	2.19
Steady-State - Surcharge Pool	29	Downstream	1.4	2.15
Rapid Drawdown	25 to 18	Upstream	1.3	1.30
SECTION 2				
End-of-Construction (EOC)	No Pool	Upstream	1.3	1.90
End-of-Construction (EOC)	No Pool	Downstream	1.3	2.24
Steady-State - Normal Pool	23	Downstream	1.5	2.13
Steady-State - Surcharge Pool	27	Downstream	1.4	2.15
Rapid Drawdown	23 to 15	Upstream	1.3	1.42
SECTION 3				
End-of-Construction (EOC)	GW at 10ft	Ext Slope	1.3	1.88
End-of-Construction (EOC)	GW at 10ft	Int Slope	1.3	1.59
Steady-State w Canal at Elev. 22ft	18	Ext Slope	1.5	1.57
Steady-State w Canal at Elev. 22ft	18	Int Slope	1.4	1.84
Rapid Drawdown	18	Int Slope	1.3	1.58
Note:				
1. Design cases and required FS from Table 3-1, EM 1110-2-1902.				

Figure 17: SLOPE/W results

SLOPE/W Program Files

Slope Stability US Slope G&R (EOC)

Report generated using GeoStudio 2012. Copyright © 1991-2013 GEO-SLOPE International Ltd.

File Information

Title: LOWP PIR Analysis Section B
Created By: Viessman, Michael W CIV USARMY CESAJ (US)
Last Edited By: Viessman, Michael W CIV USARMY CESAJ (US)
Revision Number: 557
File Version: 8.2
Tool Version: 8.12.3.7901
Date: 8/26/2018
Time: 4:51:28 PM
File Name: Section B EOC USP w toe drain.gsz
Directory: C:\Users\k3engmwv\Documents\LOWP\FY17-18 PIR Work\SEEP and SLOPEW Files\
Last Solved Date: 8/26/2018
Last Solved Time: 3:55:50 PM

Project Settings

Length(L) Units: feet
Time(t) Units: Seconds
Force(F) Units: lbf
Pressure(p) Units: psf
Strength Units: psf
Unit Weight of Water: 62.4 pcf
View: 2D
Element Thickness: 1

Analysis Settings

Slope Stability US Slope G&R (EOC)

Description: No U/S pool
Kind: SLOPE/W
Parent: Steady-State Seepage (EOC)
Method: Spencer
Settings
- Lambda
  - Lambda 1: -1
  - Lambda 2: -0.8
  - Lambda 3: -0.6
  - Lambda 4: -0.4
  - Lambda 5: -0.2
  - Lambda 6: 0

Lambda 7: 0.2
Lambda 8: 0.4
Lambda 9: 0.6
Lambda 10: 0.8
Lambda 11: 1
PWP Conditions Source: Parent Analysis
Slip Surface
Direction of movement: Left to Right
Use Passive Mode: No
Slip Surface Option: Grid and Radius
Critical slip surfaces saved: 1
Optimize Critical Slip Surface Location: Yes
Tension Crack
Tension Crack Option: (none)
F of S Distribution
F of S Calculation Option: Constant
Advanced
Number of Slices: 30
F of S Tolerance: 0.001
Minimum Slip Surface Depth: 1 ft
Optimization Maximum Iterations: 2,000
Optimization Convergence Tolerance: 1e-007
Starting Optimization Points: 8
Ending Optimization Points: 16
Complete Passes per Insertion: 1
Driving Side Maximum Convex Angle: 5 °
Resisting Side Maximum Convex Angle: 1 °

Materials

Matl. 1 - Embankment Material

Model: Mohr-Coulomb
Unit Weight: 125 pcf
Cohesion': 0 psf
Phi': 32 °
Phi-B: 0 °
Constant Unit Wt. Above Water Table: 120 pcf

Matl. 2 - Surficial Overburden Layer

Model: Mohr-Coulomb
Unit Weight: 109 pcf
Cohesion': 0 psf
Phi': 29 °
Phi-B: 0 °
Constant Unit Wt. Above Water Table: 106 pcf

Matl. 3 - Shallow Alluvial Deposits

Model: Mohr-Coulomb
Unit Weight: 123 pcf
Cohesion': 0 psf
Phi': 30 °
Phi-B: 0 °

Matl. 4 - Deeper Marine Deposits

Model: Mohr-Coulomb
Unit Weight: 125 pcf
Cohesion': 0 psf
Phi': 33 °
Phi-B: 0 °

Matl. 5 - Soil Cement Armoring

Model: Mohr-Coulomb
Unit Weight: 125 pcf
Cohesion': 0 psf
Phi': 35 °
Phi-B: 0 °
Constant Unit Wt. Above Water Table: 120 pcf

Matl. 6 - Fine Drainage Gravel

Model: Mohr-Coulomb
Unit Weight: 130 pcf
Cohesion': 0 psf
Phi': 35 °
Phi-B: 0 °
Constant Unit Wt. Above Water Table: 115 pcf

Matl. 8 - Filter Sand

Model: Mohr-Coulomb
Unit Weight: 120 pcf
Cohesion': 0 psf
Phi': 33 °
Phi-B: 0 °
Constant Unit Wt. Above Water Table: 115 pcf

Matl. 9 Concrete Outfall Works

Model: Bedrock (Impenetrable)

Slip Surface Grid

Upper Left: (26.7361, 199.5947) ft
Lower Left: (26.7361, 121.5108) ft
Lower Right: (133.6033, 121.5108) ft
Grid Horizontal Increment: 25

Grid Vertical Increment: 25
Left Projection Angle: 0 °
Right Projection Angle: 0 °

Slip Surface Radius

Upper Left Coordinate: (-20.2029, 18.4347) ft
Upper Right Coordinate: (110.6382, 18.6036) ft
Lower Left Coordinate: (-20.08, -21.0305) ft
Lower Right Coordinate: (109.6866, -21.2416) ft
Number of Increments: 50
Left Projection: No
Left Projection Angle: 135 °
Right Projection: No
Right Projection Angle: 45 °

Slip Surface Limits

Left Coordinate: (-1,200, 18) ft
Right Coordinate: (1,100, 18) ft

Surcharge Loads

Surcharge Load 1

Surcharge (Unit Weight): 200 pcf
Direction: Vertical

Coordinates

	X (ft)	Y (ft)
	-6	37.5
	6	37.5

Points

	X (ft)	Y (ft)
Point 1	-53.5	21
Point 2	-14.5	21
Point 3	-14.5	30
Point 4	-11.5	30
Point 5	-11.5	18
Point 6	-7	36.5

Point 7	-7	35.5
Point 8	6.8	35.5
Point 9	14	33
Point 10	13.7	32.1
Point 11	48.6	20.5
Point 12	51.2	18
Point 13	52.0033	19.4828
Point 14	51.9	19.4
Point 15	51.8636	19.2065
Point 16	52.097	19.0075
Point 17	52.3031	19.0832
Point 18	52.3561	19.2916
Point 19	52.3	19.4
Point 20	52.1797	19.4906
Point 21	59.3	18
Point 22	56.3	19
Point 23	54.8	19.5
Point 24	58	19.5
Point 25	7	36.5
Point 26	59.3	16.5
Point 27	67.3	16.5
Point 28	67.3	14.5
Point 29	69.3	14.5
Point 30	69.3	16.5
Point 31	69.3	18
Point 32	62.5	18
Point 33	59.5	19
Point 34	-90	18
Point 35	-90	16.5
Point 36	100	18
Point 37	100	16.5
Point 38	100	-11.4
Point 39	-90	-11.4
Point 40	100	-111.5
Point 41	-90	-111.5
Point 42	-139	18

Point 43	-127	22
Point 44	-113	22
Point 45	-101	18
Point 46	-180	18
Point 47	-180	16.5
Point 48	-180	-11.5
Point 49	-180	-111.5
Point 50	1,100	18
Point 51	1,100	16.5
Point 52	1,100	-11.5
Point 53	1,100	-111.5
Point 54	52.3546	19.1839
Point 55	51.9487	19.066
Point 56	52.2227	19.0254
Point 57	-1,200	-11.5
Point 58	-1,200	-111.5
Point 59	-53.5	19
Point 60	-12.5	19
Point 61	-12.5	20
Point 62	-53.5	20
Point 63	-77	18
Point 64	-77	16.5
Point 65	-1,200	16.5
Point 66	-234.5	16.5
Point 67	-290	-2
Point 68	-320	-2
Point 69	-375.5	16.5
Point 70	-230	18
Point 71	-1,200	18
Point 72	-380	18
Point 73	-365	13
Point 74	-245	13
Point 75	41.5	25
Point 76	-52.5	21
Point 77	-52.5	20
Point 78	-11.5	19

Point 79	-52.5	19
Point 80	-52.5	18
Point 81	-52.5	16.5
Point 82	-62.5	18
Point 83	-53.5	18
Point 84	-62.5	16.5
Point 85	-77	17.25
Point 86	-62.5	17.25
Point 87	29.5	29

Regions

	Material	Points	Area (ft^2)
Region 1	Matl. 1 - Embankment Material	1,6,7,8,9,10,11,12,5,78,4,3,2,76	993.93
Region 2		13,14,15,55,16,56,17,54,18,19,20	0.18474
Region 3	Matl. 8 - Filter Sand	9,10,11,12,21,22,16,55,15,14,13,20,23	49.637
Region 4	Matl. 5 - Soil Cement Armoring	6,7,8,9,23,24,75,87,25	69.1
Region 5	Matl. 5 - Soil Cement Armoring	22,21,26,27,28,29,30,31,32,33	22.2
Region 6	Matl. 2 - Surficial Overburden Layer	31,36,37,30	46.05
Region 7	Matl. 4 - Deeper Marine Deposits	39,38,40,41	19,019
Region 8	Matl. 1 - Embankment Material	42,43,44,45	104
Region 9	Matl. 2 - Surficial Overburden Layer	46,42,45,34,35,47	135
Region 10	Matl. 3 - Shallow Alluvial Deposits	47,35,39,48	2,515.5
Region 11	Matl. 4 - Deeper Marine Deposits	48,39,41,49	9,004.5
Region 12	Matl. 2 - Surficial Overburden Layer	36,50,51,37	1,500

Region 13	Matl. 3 - Shallow Alluvial Deposits	37,51,52,38	27,950
Region 14	Matl. 4 - Deeper Marine Deposits	38,52,53,40	1.0005e+005
Region 15	Matl. 8 - Filter Sand	20,23,22,16,56,17,54,18,19	1.5978
Region 16	Matl. 5 - Soil Cement Armoring	23,24,33,22	1.6
Region 17	Matl. 4 - Deeper Marine Deposits	57,48,49,58	1.02e+005
Region 18	Matl. 3 - Shallow Alluvial Deposits	35,39,38,37,30,29,28,27,26,81,84,64	5,297
Region 19	Matl. 2 - Surficial Overburden Layer	34,35,64,85,63	19.5
Region 20	Matl. 3 - Shallow Alluvial Deposits	65,57,48,47,66,74,67,68,73,69	26,978
Region 21	Matl. 2 - Surficial Overburden Layer	66,70,46,47	78.375
Region 22	Matl. 2 - Surficial Overburden Layer	71,65,69,72	1,233.4
Region 23	Matl. 9 Concrete Outfall Works	76,77,62,1	1
Region 24	Matl. 8 - Filter Sand	76,2,3,4,78,60,61,77	69
Region 25	Matl. 8 - Filter Sand	79,60,78,5,80	41
Region 26	Matl. 2 - Surficial Overburden Layer	80,5,12,21,26,81	167.7
Region 27	Matl. 9 Concrete Outfall Works	82,83,59,79,80,81,84,86	16
Region 28	Matl. 8 - Filter Sand	85,64,84,86	10.875
Region 29	Matl. 6 - Fine Drainage Gravel	63,85,86,82	10.875
Region 30	Matl. 6 - Fine Drainage Gravel	77,61,60,79	40
Region 31	Matl. 6 - Fine Drainage Gravel	62,77,79,59	1

Current Slip Surface

Slip Surface: 34,477
F of S: 1.907
Volume: 132.36251 ft³
Weight: 15,681.439 lbs
Resisting Moment: 1,574,139.1 lbs-ft
Activating Moment: 825,623.02 lbs-ft
Resisting Force: 9,091.8041 lbs
Activating Force: 4,768.698 lbs
F of S Rank: 1
Exit: (62.4996, 18.000133) ft
Entry: (4.404896, 36.5) ft
Radius: 28.165854 ft
Center: (82.307044, 180.85456) ft

Slip Slices

	X (ft)	Y (ft)	PWP (psf)	Base Normal Stress (psf)	Frictional Strength (psf)	Cohesive Strength (psf)
Slice 1	4.9085685	36	-1,435.2	165.855	116.13292	0
Slice 2	5.7061205	35.208263	-1,385.7956	230.3944	143.9664	0
Slice 3	6.01875	34.897913	-1,366.4298	124.76723	77.963219	0
Slice 4	6.41875	34.709952	-1,354.701	181.45231	113.38399	0
Slice 5	6.9	34.496186	-1,341.362	203.12125	126.92425	0
Slice 6	8.4203	33.820883	-1,299.2231	223.58418	139.7109	0
Slice 7	10.75715	32.81975	-1,236.7524	251.71499	157.28898	0
Slice 8	12.59025	32.07925	-1,190.5452	265.13776	165.67646	0
Slice 9	13.6034	31.672794	-1,165.1823	276.83753	172.98729	0
Slice 10	13.85	31.580367	-1,159.4149	275.72002	172.28899	0
Slice 11	14.872938	31.196966	-1,135.4907	277.9908	173.70793	0

Slice 12	16.618813	30.542604	-1,094.6585	285.612	178.47019	0
Slice 13	18.364687	29.888242	-1,053.8263	293.2332	183.23244	0
Slice 14	20.110563	29.233881	-1,012.9942	300.8544	187.99469	0
Slice 15	22.1409	28.501	-967.2624	311.10659	194.40097	0
Slice 16	24.2318	27.7826	-922.43424	316.25795	197.6199	0
Slice 17	26.0988	27.1572	-883.40928	316.57628	197.81881	0
Slice 18	28.26615	26.44758	-839.12897	317.66572	198.49958	0
Slice 19	30.45815	25.74243	-795.12761	314.87602	196.75637	0
Slice 20	32.7329	25.01225	-749.5644	312.03207	194.97928	0
Slice 21	35.123475	24.2631	-702.81744	309.73882	193.5463	0
Slice 22	37.271425	23.6087	-661.98288	302.95867	189.30959	0
Slice 23	39.16635	23.0447	-626.78928	298.42031	186.4737	0
Slice 24	40.74365	22.596873	-598.8449	291.43087	182.10622	0
Slice 25	42.58375	22.083473	-566.80874	280.26407	175.12843	0
Slice 26	44.489583	21.56603	-534.52028	269.96621	168.69361	0
Slice 27	46.13375	21.13589	-507.67956	256.65691	160.37704	0
Slice 28	47.823367	20.69386	-480.09688	242.98002	151.83077	0
Slice 29	49.375	20.31925	-456.7212	234.17362	152.07413	0
Slice 30	50.861141	20.002325	-436.9451	214.94647	139.58787	0

Slice 31	52.465224	19.663776	-415.81963	193.01537	125.34565	0
Slice 32	54.033633	19.332756	-395.16398	171.57201	111.42017	0
Slice 33	55.202193	19.086126	-379.77426	155.60019	101.04794	0
Slice 34	55.952193	18.927835	-369.8969	145.35508	94.394692	0
Slice 35	56.7355	18.762514	-359.58089	134.65499	87.445974	0
Slice 36	57.265132	18.658756	-353.10637	133.93543	86.978684	0
Slice 37	57.679632	18.606602	-349.85195	124.10749	86.901003	0
Slice 38	58.75	18.471924	-341.44803	96.547012	67.602946	0
Slice 39	60.2499	18.2832	-329.67167	57.926664	40.560687	0
Slice 40	61.7497	18.094489	-317.8961	19.308888	13.520229	0

Slope Stability DS Slope G&R (EOC)

Report generated using GeoStudio 2012. Copyright © 1991-2013 GEO-SLOPE International Ltd.

File Information

Title: LOWP PIR Analysis Section B
Created By: Viessman, Michael W CIV USARMY CESAJ (US)
Last Edited By: Viessman, Michael W CIV USARMY CESAJ (US)
Revision Number: 557
File Version: 8.2
Tool Version: 8.12.3.7901
Date: 8/26/2018
Time: 4:51:28 PM
File Name: Section B EOC USP w toe drain.gsz
Directory: C:\Users\k3engmwv\Documents\LOWP\FY17-18 PIR Work\SEEP and SLOPEW Files\
Last Solved Date: 8/26/2018
Last Solved Time: 3:52:38 PM

Project Settings

Length(L) Units: feet
Time(t) Units: Seconds
Force(F) Units: lbf
Pressure(p) Units: psf
Strength Units: psf
Unit Weight of Water: 62.4 pcf
View: 2D
Element Thickness: 1

Analysis Settings

Slope Stability DS Slope G&R (EOC)

Description: No U/S pool
Kind: SLOPE/W
Parent: Steady-State Seepage (EOC)
Method: Spencer
Settings
- Lambda
  - Lambda 1: -1
  - Lambda 2: -0.8
  - Lambda 3: -0.6
  - Lambda 4: -0.4
  - Lambda 5: -0.2
  - Lambda 6: 0

Lambda 7: 0.2
Lambda 8: 0.4
Lambda 9: 0.6
Lambda 10: 0.8
Lambda 11: 1
PWP Conditions Source: Parent Analysis
Slip Surface
Direction of movement: Right to Left
Use Passive Mode: No
Slip Surface Option: Grid and Radius
Critical slip surfaces saved: 1
Optimize Critical Slip Surface Location: Yes
Tension Crack
Tension Crack Option: (none)
F of S Distribution
F of S Calculation Option: Constant
Advanced
Number of Slices: 30
F of S Tolerance: 0.001
Minimum Slip Surface Depth: 1 ft
Optimization Maximum Iterations: 2,000
Optimization Convergence Tolerance: 1e-007
Starting Optimization Points: 8
Ending Optimization Points: 16
Complete Passes per Insertion: 1
Driving Side Maximum Convex Angle: 5 °
Resisting Side Maximum Convex Angle: 1 °

Materials

Matl. 1 - Embankment Material

Model: Mohr-Coulomb
Unit Weight: 125 pcf
Cohesion': 0 psf
Phi': 32 °
Phi-B: 0 °
Constant Unit Wt. Above Water Table: 120 pcf

Matl. 2 - Surficial Overburden Layer

Model: Mohr-Coulomb
Unit Weight: 109 pcf
Cohesion': 0 psf
Phi': 29 °
Phi-B: 0 °
Constant Unit Wt. Above Water Table: 106 pcf

Matl. 3 - Shallow Alluvial Deposits

Model: Mohr-Coulomb
Unit Weight: 123 pcf
Cohesion': 0 psf
Phi': 30 °
Phi-B: 0 °

Matl. 4 - Deeper Marine Deposits

Model: Mohr-Coulomb
Unit Weight: 125 pcf
Cohesion': 0 psf
Phi': 33 °
Phi-B: 0 °

Matl. 5 - Soil Cement Armoring

Model: Mohr-Coulomb
Unit Weight: 125 pcf
Cohesion': 0 psf
Phi': 35 °
Phi-B: 0 °
Constant Unit Wt. Above Water Table: 120 pcf

Matl. 6 - Fine Drainage Gravel

Model: Mohr-Coulomb
Unit Weight: 130 pcf
Cohesion': 0 psf
Phi': 35 °
Phi-B: 0 °
Constant Unit Wt. Above Water Table: 115 pcf

Matl. 8 - Filter Sand

Model: Mohr-Coulomb
Unit Weight: 120 pcf
Cohesion': 0 psf
Phi': 33 °
Phi-B: 0 °
Constant Unit Wt. Above Water Table: 115 pcf

Matl. 9 Concrete Outfall Works

Model: Bedrock (Impenetrable)

Slip Surface Grid

Upper Left: (-95.9639, 117.4947) ft
Lower Left: (-95.9639, 39.4108) ft
Lower Right: (10.9033, 39.4108) ft
Grid Horizontal Increment: 25

Grid Vertical Increment: 25
Left Projection Angle: 0 °
Right Projection Angle: 0 °

Slip Surface Radius

Upper Left Coordinate: (-120.2029, 18.4347) ft
Upper Right Coordinate: (10.6382, 18.6036) ft
Lower Left Coordinate: (-120.08, -21.0305) ft
Lower Right Coordinate: (9.6866, -21.2416) ft
Number of Increments: 50
Left Projection: No
Left Projection Angle: 135 °
Right Projection: No
Right Projection Angle: 45 °

Slip Surface Limits

Left Coordinate: (-1,200, 18) ft
Right Coordinate: (1,100, 18) ft

Surcharge Loads

Surcharge Load 1

Surcharge (Unit Weight): 200 pcf
Direction: Vertical

Coordinates

	X (ft)	Y (ft)
	-6	37.5
	6	37.5

Points

	X (ft)	Y (ft)
Point 1	-53.5	21
Point 2	-14.5	21
Point 3	-14.5	30
Point 4	-11.5	30
Point 5	-11.5	18
Point 6	-7	36.5

Point 7	-7	35.5
Point 8	6.8	35.5
Point 9	14	33
Point 10	13.7	32.1
Point 11	48.6	20.5
Point 12	51.2	18
Point 13	52.0033	19.4828
Point 14	51.9	19.4
Point 15	51.8636	19.2065
Point 16	52.097	19.0075
Point 17	52.3031	19.0832
Point 18	52.3561	19.2916
Point 19	52.3	19.4
Point 20	52.1797	19.4906
Point 21	59.3	18
Point 22	56.3	19
Point 23	54.8	19.5
Point 24	58	19.5
Point 25	7	36.5
Point 26	59.3	16.5
Point 27	67.3	16.5
Point 28	67.3	14.5
Point 29	69.3	14.5
Point 30	69.3	16.5
Point 31	69.3	18
Point 32	62.5	18
Point 33	59.5	19
Point 34	-90	18
Point 35	-90	16.5
Point 36	100	18
Point 37	100	16.5
Point 38	100	-11.4
Point 39	-90	-11.4
Point 40	100	-111.5
Point 41	-90	-111.5
Point 42	-139	18

Point 43	-127	22
Point 44	-113	22
Point 45	-101	18
Point 46	-180	18
Point 47	-180	16.5
Point 48	-180	-11.5
Point 49	-180	-111.5
Point 50	1,100	18
Point 51	1,100	16.5
Point 52	1,100	-11.5
Point 53	1,100	-111.5
Point 54	52.3546	19.1839
Point 55	51.9487	19.066
Point 56	52.2227	19.0254
Point 57	-1,200	-11.5
Point 58	-1,200	-111.5
Point 59	-53.5	19
Point 60	-12.5	19
Point 61	-12.5	20
Point 62	-53.5	20
Point 63	-77	18
Point 64	-77	16.5
Point 65	-1,200	16.5
Point 66	-234.5	16.5
Point 67	-290	-2
Point 68	-320	-2
Point 69	-375.5	16.5
Point 70	-230	18
Point 71	-1,200	18
Point 72	-380	18
Point 73	-365	13
Point 74	-245	13
Point 75	41.5	25
Point 76	-52.5	21
Point 77	-52.5	20
Point 78	-11.5	19

Point 79	-52.5	19
Point 80	-52.5	18
Point 81	-52.5	16.5
Point 82	-62.5	18
Point 83	-53.5	18
Point 84	-62.5	16.5
Point 85	-77	17.25
Point 86	-62.5	17.25
Point 87	29.5	29

Regions

	Material	Points	Area (ft^2)
Region 1	Matl. 1 - Embankment Material	1,6,7,8,9,10,11,12,5,78,4,3,2,76	993.93
Region 2		13,14,15,55,16,56,17,54,18,19,20	0.18474
Region 3	Matl. 8 - Filter Sand	9,10,11,12,21,22,16,55,15,14,13,20,23	49.637
Region 4	Matl. 5 - Soil Cement Armoring	6,7,8,9,23,24,75,87,25	69.1
Region 5	Matl. 5 - Soil Cement Armoring	22,21,26,27,28,29,30,31,32,33	22.2
Region 6	Matl. 2 - Surficial Overburden Layer	31,36,37,30	46.05
Region 7	Matl. 4 - Deeper Marine Deposits	39,38,40,41	19,019
Region 8	Matl. 1 - Embankment Material	42,43,44,45	104
Region 9	Matl. 2 - Surficial Overburden Layer	46,42,45,34,35,47	135
Region 10	Matl. 3 - Shallow Alluvial Deposits	47,35,39,48	2,515.5
Region 11	Matl. 4 - Deeper Marine Deposits	48,39,41,49	9,004.5
Region 12	Matl. 2 - Surficial Overburden Layer	36,50,51,37	1,500

Region 13	Matl. 3 - Shallow Alluvial Deposits	37,51,52,38	27,950
Region 14	Matl. 4 - Deeper Marine Deposits	38,52,53,40	1.0005e+005
Region 15	Matl. 8 - Filter Sand	20,23,22,16,56,17,54,18,19	1.5978
Region 16	Matl. 5 - Soil Cement Armoring	23,24,33,22	1.6
Region 17	Matl. 4 - Deeper Marine Deposits	57,48,49,58	1.02e+005
Region 18	Matl. 3 - Shallow Alluvial Deposits	35,39,38,37,30,29,28,27,26,81,84,64	5,297
Region 19	Matl. 2 - Surficial Overburden Layer	34,35,64,85,63	19.5
Region 20	Matl. 3 - Shallow Alluvial Deposits	65,57,48,47,66,74,67,68,73,69	26,978
Region 21	Matl. 2 - Surficial Overburden Layer	66,70,46,47	78.375
Region 22	Matl. 2 - Surficial Overburden Layer	71,65,69,72	1,233.4
Region 23	Matl. 9 Concrete Outfall Works	76,77,62,1	1
Region 24	Matl. 8 - Filter Sand	76,2,3,4,78,60,61,77	69
Region 25	Matl. 8 - Filter Sand	79,60,78,5,80	41
Region 26	Matl. 2 - Surficial Overburden Layer	80,5,12,21,26,81	167.7
Region 27	Matl. 9 Concrete Outfall Works	82,83,59,79,80,81,84,86	16
Region 28	Matl. 8 - Filter Sand	85,64,84,86	10.875
Region 29	Matl. 6 - Fine Drainage Gravel	63,85,86,82	10.875
Region 30	Matl. 6 - Fine Drainage Gravel	77,61,60,79	40
Region 31	Matl. 6 - Fine Drainage Gravel	62,77,79,59	1

Current Slip Surface

Slip Surface: 34,477
F of S: 2.270
Volume: 389.15368 ft³
Weight: 46,270.412 lbs
Resisting Moment: 1,180,044 lbs-ft
Activating Moment: 520,313.32 lbs-ft
Resisting Force: 27,257.332 lbs
Activating Force: 12,051.964 lbs
F of S Rank: 1
Exit: (-52.868424, 21.210525) ft
Entry: (0.79189471, 36.5) ft
Radius: 27.010222 ft
Center: (-36.118268, 58.150936) ft

Slip Slices

	X (ft)	Y (ft)	PWP (psf)	Base Normal Stress (psf)	Frictional Strength (psf)	Cohesive Strength (psf)
Slice 1	-52.68414	21.105263	-505.76839	32.630633	20.389882	0
Slice 2	-51.624507	20.5	-468	219.33228	142.43605	0
Slice 3	-50.239529	19.7089	-418.63536	475.91504	333.2393	0
Slice 4	-49.058194	19.2089	-387.43536	523.88383	366.82741	0
Slice 5	-47.582627	18.75	-358.8	664.70526	431.66464	0
Slice 6	-45.972333	18.2492	-327.55008	828.38953	537.96245	0
Slice 7	-44.111125	17.906525	-306.16716	824.28414	456.90816	0
Slice 8	-42.001575	17.722775	-294.70116	941.48336	521.87275	0
Slice 9	-39.832475	17.628975	-288.84804	1,000.2311	554.43716	0
Slice 10	-37.603825	17.625125	-288.6078	1,096.4416	607.76749	0
Slice 11	-35.40235	17.7055	-293.6232	1,132.6057	627.81359	0

Slice 12	-33.22805	17.8701	-303.89424	1,204.1829	667.48948	0
Slice 13	-32.069713	17.9762	-310.51488	1,088.7699	603.51503	0
Slice 14	-30.798213	18.4013	-337.04112	1,088.4597	706.85402	0
Slice 15	-29.355617	18.9013	-368.24112	1,049.6453	681.6476	0
Slice 16	-27.88596	19.5	-405.6	1,038.2928	727.02045	0
Slice 17	-26.456194	20.08245	-441.94488	1,032.3802	670.43556	0
Slice 18	-25.8287	20.3015	-455.6136	1,077.7808	699.91902	0
Slice 19	-24.717556	20.71905	-481.66872	1,028.1124	667.66397	0
Slice 20	-23.282059	21.306917	-518.3516	1,019.1849	636.85742	0
Slice 21	-21.783155	21.92075	-556.6548	1,007.2667	629.41012	0
Slice 22	-20.284252	22.534583	-594.958	995.34857	621.96281	0
Slice 23	-18.56065	23.3044	-642.99456	945.13319	590.58477	0
Slice 24	-16.814875	24.154788	-696.05875	906.57703	566.4922	0
Slice 25	-15.271625	24.929763	-744.4172	880.54362	550.22472	0
Slice 26	-13.6364	25.750925	-795.65773	833.59101	541.34033	0
Slice 27	-12.1364	26.552972	-845.70546	778.87545	505.80763	0
Slice 28	-10.75	27.355472	-895.78146	761.92346	476.10262	0
Slice 29	-9.25	28.223728	-949.96063	726.38203	453.89387	0
Slice 30	-7.75	29.091984	-1,004.1398	690.8406	431.68512	0

Slice 31	-6.51585	29.806356	-1,048.7166	646.02272	403.6798	0
Slice 32	-6.01585	30.101306	-1,067.1215	535.15882	334.40435	0
Slice 33	-4.6783	31.342306	-1,144.5599	570.75972	356.65026	0
Slice 34	-2.5905843	33.30145	-1,266.8105	402.50001	251.50992	0
Slice 35	-1.0488843	34.7764	-1,358.8474	280.4772	175.26161	0
Slice 36	0.25934736	36.00925	-1,435.7772	178.18766	124.76835	0

Slope Stability Canal Slope G&R (EOC)

Report generated using GeoStudio 2012. Copyright © 1991-2013 GEO-SLOPE International Ltd.

File Information

Title: LOWP PIR Analysis Section B
Created By: Viessman, Michael W CIV USARMY CESAJ (US)
Last Edited By: Viessman, Michael W CIV USARMY CESAJ (US)
Revision Number: 557
File Version: 8.2
Tool Version: 8.12.3.7901
Date: 8/26/2018
Time: 4:51:28 PM
File Name: Section B EOC USP w toe drain.gsz
Directory: C:\Users\k3engmwv\Documents\LOWP\FY17-18 PIR Work\SEEP and SLOPEW Files\
Last Solved Date: 8/26/2018
Last Solved Time: 3:53:06 PM

Project Settings

Length(L) Units: feet
Time(t) Units: Seconds
Force(F) Units: lbf
Pressure(p) Units: psf
Strength Units: psf
Unit Weight of Water: 62.4 pcf
View: 2D
Element Thickness: 1

Analysis Settings

Slope Stability Canal Slope G&R (EOC)

Description: No U/S pool
Kind: SLOPE/W
Parent: Steady-State Seepage (EOC)
Method: Spencer
Settings
- Lambda
  - Lambda 1: -1
  - Lambda 2: -0.8
  - Lambda 3: -0.6
  - Lambda 4: -0.4
  - Lambda 5: -0.2
  - Lambda 6: 0

Lambda 7: 0.2
Lambda 8: 0.4
Lambda 9: 0.6
Lambda 10: 0.8
Lambda 11: 1
PWP Conditions Source: Parent Analysis
Slip Surface
Direction of movement: Right to Left
Use Passive Mode: No
Slip Surface Option: Grid and Radius
Critical slip surfaces saved: 1
Optimize Critical Slip Surface Location: Yes
Tension Crack
Tension Crack Option: (none)
F of S Distribution
F of S Calculation Option: Constant
Advanced
Number of Slices: 30
F of S Tolerance: 0.001
Minimum Slip Surface Depth: 1 ft
Optimization Maximum Iterations: 2,000
Optimization Convergence Tolerance: 1e-007
Starting Optimization Points: 8
Ending Optimization Points: 16
Complete Passes per Insertion: 1
Driving Side Maximum Convex Angle: 5 °
Resisting Side Maximum Convex Angle: 1 °

Materials

Matl. 1 - Embankment Material

Model: Mohr-Coulomb
Unit Weight: 125 pcf
Cohesion': 0 psf
Phi': 32 °
Phi-B: 0 °
Constant Unit Wt. Above Water Table: 120 pcf

Matl. 2 - Surficial Overburden Layer

Model: Mohr-Coulomb
Unit Weight: 109 pcf
Cohesion': 0 psf
Phi': 29 °
Phi-B: 0 °
Constant Unit Wt. Above Water Table: 106 pcf

Matl. 3 - Shallow Alluvial Deposits

Model: Mohr-Coulomb
Unit Weight: 123 pcf
Cohesion': 0 psf
Phi': 30 °
Phi-B: 0 °

Matl. 4 - Deeper Marine Deposits

Model: Mohr-Coulomb
Unit Weight: 125 pcf
Cohesion': 0 psf
Phi': 33 °
Phi-B: 0 °

Matl. 5 - Soil Cement Armoring

Model: Mohr-Coulomb
Unit Weight: 125 pcf
Cohesion': 0 psf
Phi': 35 °
Phi-B: 0 °
Constant Unit Wt. Above Water Table: 120 pcf

Matl. 6 - Fine Drainage Gravel

Model: Mohr-Coulomb
Unit Weight: 130 pcf
Cohesion': 0 psf
Phi': 35 °
Phi-B: 0 °
Constant Unit Wt. Above Water Table: 115 pcf

Matl. 8 - Filter Sand

Model: Mohr-Coulomb
Unit Weight: 120 pcf
Cohesion': 0 psf
Phi': 33 °
Phi-B: 0 °
Constant Unit Wt. Above Water Table: 115 pcf

Matl. 9 Concrete Outfall Works

Model: Bedrock (Impenetrable)

Slip Surface Grid

Upper Left: (-311.2639, 113.4947) ft
Lower Left: (-311.2639, 35.4108) ft
Lower Right: (-204.3967, 35.4108) ft
Grid Horizontal Increment: 25

Grid Vertical Increment: 25
Left Projection Angle: 0 °
Right Projection Angle: 0 °

Slip Surface Radius

Upper Left Coordinate: (-346.9029, 18.9347) ft
Upper Right Coordinate: (-216.0618, 19.1036) ft
Lower Left Coordinate: (-346.78, -20.5305) ft
Lower Right Coordinate: (-217.0134, -20.7416) ft
Number of Increments: 50
Left Projection: No
Left Projection Angle: 135 °
Right Projection: No
Right Projection Angle: 45 °

Slip Surface Limits

Left Coordinate: (-1,200, 18) ft
Right Coordinate: (1,100, 18) ft

Surcharge Loads

Surcharge Load 1

Surcharge (Unit Weight): 200 pcf
Direction: Vertical

Coordinates

	X (ft)	Y (ft)
	-6	37.5
	6	37.5

Points

	X (ft)	Y (ft)
Point 1	-53.5	21
Point 2	-14.5	21
Point 3	-14.5	30
Point 4	-11.5	30
Point 5	-11.5	18
Point 6	-7	36.5

Point 7	-7	35.5
Point 8	6.8	35.5
Point 9	14	33
Point 10	13.7	32.1
Point 11	48.6	20.5
Point 12	51.2	18
Point 13	52.0033	19.4828
Point 14	51.9	19.4
Point 15	51.8636	19.2065
Point 16	52.097	19.0075
Point 17	52.3031	19.0832
Point 18	52.3561	19.2916
Point 19	52.3	19.4
Point 20	52.1797	19.4906
Point 21	59.3	18
Point 22	56.3	19
Point 23	54.8	19.5
Point 24	58	19.5
Point 25	7	36.5
Point 26	59.3	16.5
Point 27	67.3	16.5
Point 28	67.3	14.5
Point 29	69.3	14.5
Point 30	69.3	16.5
Point 31	69.3	18
Point 32	62.5	18
Point 33	59.5	19
Point 34	-90	18
Point 35	-90	16.5
Point 36	100	18
Point 37	100	16.5
Point 38	100	-11.4
Point 39	-90	-11.4
Point 40	100	-111.5
Point 41	-90	-111.5
Point 42	-139	18

Point 43	-127	22
Point 44	-113	22
Point 45	-101	18
Point 46	-180	18
Point 47	-180	16.5
Point 48	-180	-11.5
Point 49	-180	-111.5
Point 50	1,100	18
Point 51	1,100	16.5
Point 52	1,100	-11.5
Point 53	1,100	-111.5
Point 54	52.3546	19.1839
Point 55	51.9487	19.066
Point 56	52.2227	19.0254
Point 57	-1,200	-11.5
Point 58	-1,200	-111.5
Point 59	-53.5	19
Point 60	-12.5	19
Point 61	-12.5	20
Point 62	-53.5	20
Point 63	-77	18
Point 64	-77	16.5
Point 65	-1,200	16.5
Point 66	-234.5	16.5
Point 67	-290	-2
Point 68	-320	-2
Point 69	-375.5	16.5
Point 70	-230	18
Point 71	-1,200	18
Point 72	-380	18
Point 73	-365	13
Point 74	-245	13
Point 75	41.5	25
Point 76	-52.5	21
Point 77	-52.5	20
Point 78	-11.5	19

Point 79	-52.5	19
Point 80	-52.5	18
Point 81	-52.5	16.5
Point 82	-62.5	18
Point 83	-53.5	18
Point 84	-62.5	16.5
Point 85	-77	17.25
Point 86	-62.5	17.25
Point 87	29.5	29

Regions

	Material	Points	Area (ft^2)
Region 1	Matl. 1 - Embankment Material	1,6,7,8,9,10,11,12,5,78,4,3,2,76	993.93
Region 2		13,14,15,55,16,56,17,54,18,19,20	0.18474
Region 3	Matl. 8 - Filter Sand	9,10,11,12,21,22,16,55,15,14,13,20,23	49.637
Region 4	Matl. 5 - Soil Cement Armoring	6,7,8,9,23,24,75,87,25	69.1
Region 5	Matl. 5 - Soil Cement Armoring	22,21,26,27,28,29,30,31,32,33	22.2
Region 6	Matl. 2 - Surficial Overburden Layer	31,36,37,30	46.05
Region 7	Matl. 4 - Deeper Marine Deposits	39,38,40,41	19,019
Region 8	Matl. 1 - Embankment Material	42,43,44,45	104
Region 9	Matl. 2 - Surficial Overburden Layer	46,42,45,34,35,47	135
Region 10	Matl. 3 - Shallow Alluvial Deposits	47,35,39,48	2,515.5
Region 11	Matl. 4 - Deeper Marine Deposits	48,39,41,49	9,004.5
Region 12	Matl. 2 - Surficial Overburden Layer	36,50,51,37	1,500

Region 13	Matl. 3 - Shallow Alluvial Deposits	37,51,52,38	27,950
Region 14	Matl. 4 - Deeper Marine Deposits	38,52,53,40	1.0005e+005
Region 15	Matl. 8 - Filter Sand	20,23,22,16,56,17,54,18,19	1.5978
Region 16	Matl. 5 - Soil Cement Armoring	23,24,33,22	1.6
Region 17	Matl. 4 - Deeper Marine Deposits	57,48,49,58	1.02e+005
Region 18	Matl. 3 - Shallow Alluvial Deposits	35,39,38,37,30,29,28,27,26,81,84,64	5,297
Region 19	Matl. 2 - Surficial Overburden Layer	34,35,64,85,63	19.5
Region 20	Matl. 3 - Shallow Alluvial Deposits	65,57,48,47,66,74,67,68,73,69	26,978
Region 21	Matl. 2 - Surficial Overburden Layer	66,70,46,47	78.375
Region 22	Matl. 2 - Surficial Overburden Layer	71,65,69,72	1,233.4
Region 23	Matl. 9 Concrete Outfall Works	76,77,62,1	1
Region 24	Matl. 8 - Filter Sand	76,2,3,4,78,60,61,77	69
Region 25	Matl. 8 - Filter Sand	79,60,78,5,80	41
Region 26	Matl. 2 - Surficial Overburden Layer	80,5,12,21,26,81	167.7
Region 27	Matl. 9 Concrete Outfall Works	82,83,59,79,80,81,84,86	16
Region 28	Matl. 8 - Filter Sand	85,64,84,86	10.875
Region 29	Matl. 6 - Fine Drainage Gravel	63,85,86,82	10.875
Region 30	Matl. 6 - Fine Drainage Gravel	77,61,60,79	40
Region 31	Matl. 6 - Fine Drainage Gravel	62,77,79,59	1

Current Slip Surface

Slip Surface: 726
F of S: 1.591
Volume: 22.645467 ft³
Weight: 2,785.3924 lbs
Resisting Moment: 26,474.202 lbs-ft
Activating Moment: 16,640.671 lbs-ft
Resisting Force: 976.20078 lbs
Activating Force: 613.70506 lbs
F of S Rank: 2
Exit: (-252.92082, 10.359727) ft
Entry: (-235.18558, 16.271472) ft
Radius: 25.096094 ft
Center: (-251.41827, 35.4108) ft

Slip Slices

	X (ft)	Y (ft)	PWP (psf)	Base Normal Stress (psf)	Frictional Strength (psf)	Cohesive Strength (psf)
Slice 1	-252.61617	10.345168	165.66154	185.78228	11.616714	0
Slice 2	-252.00688	10.323461	167.01606	200.00247	19.044712	0
Slice 3	-251.39758	10.316564	167.44641	211.95909	25.699405	0
Slice 4	-250.78829	10.324465	166.95336	221.72129	31.620282	0
Slice 5	-250.179	10.347179	165.53603	229.35014	36.843095	0
Slice 6	-249.5697	10.384745	163.1919	234.89937	41.400328	0
Slice 7	-248.96041	10.437231	159.91678	238.41607	45.321587	0
Slice 8	-248.35112	10.504731	155.7048	239.94127	48.633951	0
Slice 9	-247.74182	10.587367	150.5483	239.51037	51.362274	0
Slice 10	-247.13253	10.685292	144.4378	237.15354	53.529456	0
Slice 11	-246.52323	10.798687	137.36191	232.89609	55.156682	0

Slice 12	-245.91394	10.927769	129.30721	226.75869	56.263637	0
Slice 13	-245.30465	11.072787	120.25811	218.75761	56.868713	0
Slice 14	-244.71134	11.229375	110.487	215.08679	60.390719	0
Slice 15	-244.13402	11.396998	100.02733	215.61842	66.736546	0
Slice 16	-243.5567	11.579784	88.621491	214.1956	72.500244	0
Slice 17	-242.97938	11.778085	76.247504	210.8195	77.695178	0
Slice 18	-242.40207	11.992296	62.880759	205.48692	82.333703	0
Slice 19	-241.82475	12.222857	48.493723	198.19017	86.427283	0
Slice 20	-241.24743	12.470263	33.055607	188.91699	89.98661	0
Slice 21	-240.67011	12.735064	16.531978	177.65033	93.021725	0
Slice 22	-240.09279	13.01788	-1.1157084	164.47555	94.960003	0
Slice 23	-239.51547	13.319402	-19.930666	151.12776	87.253654	0
Slice 24	-238.93815	13.640408	-39.961445	136.15893	78.611397	0
Slice 25	-238.36084	13.981775	-61.262746	119.57455	69.036396	0
Slice 26	-237.78352	14.344494	-83.89641	101.37902	58.531203	0
Slice 27	-237.2062	14.72969	-107.93263	81.576125	47.097998	0
Slice 28	-236.62888	15.138646	-133.45148	60.16957	34.738917	0
Slice 29	-236.05156	15.572833	-160.5448	37.163729	21.456489	0
Slice 30	-235.47424	16.033952	-189.31861	12.564687	7.2542252	0

Slope Stability DS Slope G&R (NP LT SSS)

Report generated using GeoStudio 2012. Copyright © 1991-2013 GEO-SLOPE International Ltd.

File Information

Title: LOWP PIR Analysis Section B
Created By: Viessman, Michael W CIV USARMY CESAJ (US)
Last Edited By: Viessman, Michael W CIV USARMY CESAJ (US)
Revision Number: 567
File Version: 8.2
Tool Version: 8.12.3.7901
Date: 8/26/2018
Time: 5:09:31 PM
File Name: Section B EOC USP w toe drain.gsz
Directory: C:\Users\k3engmwv\Documents\LOWP\FY17-18 PIR Work\SEEP and SLOPEW Files\
Last Solved Date: 8/26/2018
Last Solved Time: 4:10:38 PM

Project Settings

Length(L) Units: feet
Time(t) Units: Seconds
Force(F) Units: lbf
Pressure(p) Units: psf
Strength Units: psf
Unit Weight of Water: 62.4 pcf
View: 2D
Element Thickness: 1

Analysis Settings

Slope Stability DS Slope G&R (NP LT SSS)

Description: U/S NP
Kind: SLOPE/W
Parent: Steady-State Seepage NP (LT SSS)
Method: Spencer
Settings
- Lambda
  - Lambda 1: -1
  - Lambda 2: -0.8
  - Lambda 3: -0.6
  - Lambda 4: -0.4
  - Lambda 5: -0.2
  - Lambda 6: 0

Lambda 7: 0.2
Lambda 8: 0.4
Lambda 9: 0.6
Lambda 10: 0.8
Lambda 11: 1
PWP Conditions Source: Parent Analysis
Slip Surface
Direction of movement: Right to Left
Use Passive Mode: No
Slip Surface Option: Grid and Radius
Critical slip surfaces saved: 1
Optimize Critical Slip Surface Location: Yes
Tension Crack
Tension Crack Option: (none)
F of S Distribution
F of S Calculation Option: Constant
Advanced
Number of Slices: 30
F of S Tolerance: 0.001
Minimum Slip Surface Depth: 1 ft
Optimization Maximum Iterations: 2,000
Optimization Convergence Tolerance: 1e-007
Starting Optimization Points: 8
Ending Optimization Points: 16
Complete Passes per Insertion: 1
Driving Side Maximum Convex Angle: 5 °
Resisting Side Maximum Convex Angle: 1 °

Materials

Matl. 1 - Embankment Material

Model: Mohr-Coulomb
Unit Weight: 125 pcf
Cohesion': 0 psf
Phi': 32 °
Phi-B: 0 °
Constant Unit Wt. Above Water Table: 120 pcf

Matl. 2 - Surficial Overburden Layer

Model: Mohr-Coulomb
Unit Weight: 109 pcf
Cohesion': 0 psf
Phi': 29 °
Phi-B: 0 °
Constant Unit Wt. Above Water Table: 106 pcf

Matl. 3 - Shallow Alluvial Deposits

Model: Mohr-Coulomb
Unit Weight: 123 pcf
Cohesion': 0 psf
Phi': 30 °
Phi-B: 0 °

Matl. 4 - Deeper Marine Deposits

Model: Mohr-Coulomb
Unit Weight: 125 pcf
Cohesion': 0 psf
Phi': 33 °
Phi-B: 0 °

Matl. 5 - Soil Cement Armoring

Model: Mohr-Coulomb
Unit Weight: 125 pcf
Cohesion': 0 psf
Phi': 35 °
Phi-B: 0 °
Constant Unit Wt. Above Water Table: 120 pcf

Matl. 6 - Fine Drainage Gravel

Model: Mohr-Coulomb
Unit Weight: 130 pcf
Cohesion': 0 psf
Phi': 35 °
Phi-B: 0 °
Constant Unit Wt. Above Water Table: 115 pcf

Matl. 8 - Filter Sand

Model: Mohr-Coulomb
Unit Weight: 120 pcf
Cohesion': 0 psf
Phi': 33 °
Phi-B: 0 °
Constant Unit Wt. Above Water Table: 115 pcf

Matl. 9 Concrete Outfall Works

Model: Bedrock (Impenetrable)

Slip Surface Grid

Upper Left: (-95.9639, 117.4947) ft
Lower Left: (-95.9639, 39.4108) ft
Lower Right: (10.9033, 39.4108) ft
Grid Horizontal Increment: 25

Grid Vertical Increment: 25
Left Projection Angle: 0 °
Right Projection Angle: 0 °

Slip Surface Radius

Upper Left Coordinate: (-120.2029, 18.4347) ft
Upper Right Coordinate: (10.6382, 18.6036) ft
Lower Left Coordinate: (-120.08, -21.0305) ft
Lower Right Coordinate: (9.6866, -21.2416) ft
Number of Increments: 50
Left Projection: No
Left Projection Angle: 135 °
Right Projection: No
Right Projection Angle: 45 °

Slip Surface Limits

Left Coordinate: (-1,200, 18) ft
Right Coordinate: (1,100, 18) ft

Surcharge Loads

Surcharge Load 1

Surcharge (Unit Weight): 200 pcf
Direction: Vertical

Coordinates

	X (ft)	Y (ft)
	-6	37.5
	6	37.5

Points

	X (ft)	Y (ft)
Point 1	-53.5	21
Point 2	-14.5	21
Point 3	-14.5	30
Point 4	-11.5	30
Point 5	-11.5	18
Point 6	-7	36.5

Point 7	-7	35.5
Point 8	6.8	35.5
Point 9	14	33
Point 10	13.7	32.1
Point 11	48.6	20.5
Point 12	51.2	18
Point 13	52.0033	19.4828
Point 14	51.9	19.4
Point 15	51.8636	19.2065
Point 16	52.097	19.0075
Point 17	52.3031	19.0832
Point 18	52.3561	19.2916
Point 19	52.3	19.4
Point 20	52.1797	19.4906
Point 21	59.3	18
Point 22	56.3	19
Point 23	54.8	19.5
Point 24	58	19.5
Point 25	7	36.5
Point 26	59.3	16.5
Point 27	67.3	16.5
Point 28	67.3	14.5
Point 29	69.3	14.5
Point 30	69.3	16.5
Point 31	69.3	18
Point 32	62.5	18
Point 33	59.5	19
Point 34	-90	18
Point 35	-90	16.5
Point 36	100	18
Point 37	100	16.5
Point 38	100	-11.4
Point 39	-90	-11.4
Point 40	100	-111.5
Point 41	-90	-111.5
Point 42	-139	18

Point 43	-127	22
Point 44	-113	22
Point 45	-101	18
Point 46	-180	18
Point 47	-180	16.5
Point 48	-180	-11.5
Point 49	-180	-111.5
Point 50	1,100	18
Point 51	1,100	16.5
Point 52	1,100	-11.5
Point 53	1,100	-111.5
Point 54	52.3546	19.1839
Point 55	51.9487	19.066
Point 56	52.2227	19.0254
Point 57	-1,200	-11.5
Point 58	-1,200	-111.5
Point 59	-53.5	19
Point 60	-12.5	19
Point 61	-12.5	20
Point 62	-53.5	20
Point 63	-77	18
Point 64	-77	16.5
Point 65	-1,200	16.5
Point 66	-234.5	16.5
Point 67	-290	-2
Point 68	-320	-2
Point 69	-375.5	16.5
Point 70	-230	18
Point 71	-1,200	18
Point 72	-380	18
Point 73	-365	13
Point 74	-245	13
Point 75	41.5	25
Point 76	-52.5	21
Point 77	-52.5	20
Point 78	-11.5	19

Point 79	-52.5	19
Point 80	-52.5	18
Point 81	-52.5	16.5
Point 82	-62.5	18
Point 83	-53.5	18
Point 84	-62.5	16.5
Point 85	-77	17.25
Point 86	-62.5	17.25
Point 87	29.5	29

Regions

	Material	Points	Area (ft^2)
Region 1	Matl. 1 - Embankment Material	1,6,7,8,9,10,11,12,5,78,4,3,2,76	993.93
Region 2		13,14,15,55,16,56,17,54,18,19,20	0.18474
Region 3	Matl. 8 - Filter Sand	9,10,11,12,21,22,16,55,15,14,13,20,23	49.637
Region 4	Matl. 5 - Soil Cement Armoring	6,7,8,9,23,24,75,87,25	69.1
Region 5	Matl. 5 - Soil Cement Armoring	22,21,26,27,28,29,30,31,32,33	22.2
Region 6	Matl. 2 - Surficial Overburden Layer	31,36,37,30	46.05
Region 7	Matl. 4 - Deeper Marine Deposits	39,38,40,41	19,019
Region 8	Matl. 1 - Embankment Material	42,43,44,45	104
Region 9	Matl. 2 - Surficial Overburden Layer	46,42,45,34,35,47	135
Region 10	Matl. 3 - Shallow Alluvial Deposits	47,35,39,48	2,515.5
Region 11	Matl. 4 - Deeper Marine Deposits	48,39,41,49	9,004.5
Region 12	Matl. 2 - Surficial Overburden Layer	36,50,51,37	1,500

Region 13	Matl. 3 - Shallow Alluvial Deposits	37,51,52,38	27,950
Region 14	Matl. 4 - Deeper Marine Deposits	38,52,53,40	1.0005e+005
Region 15	Matl. 8 - Filter Sand	20,23,22,16,56,17,54,18,19	1.5978
Region 16	Matl. 5 - Soil Cement Armoring	23,24,33,22	1.6
Region 17	Matl. 4 - Deeper Marine Deposits	57,48,49,58	1.02e+005
Region 18	Matl. 3 - Shallow Alluvial Deposits	35,39,38,37,30,29,28,27,26,81,84,64	5,297
Region 19	Matl. 2 - Surficial Overburden Layer	34,35,64,85,63	19.5
Region 20	Matl. 3 - Shallow Alluvial Deposits	65,57,48,47,66,74,67,68,73,69	26,978
Region 21	Matl. 2 - Surficial Overburden Layer	66,70,46,47	78.375
Region 22	Matl. 2 - Surficial Overburden Layer	71,65,69,72	1,233.4
Region 23	Matl. 9 Concrete Outfall Works	76,77,62,1	1
Region 24	Matl. 8 - Filter Sand	76,2,3,4,78,60,61,77	69
Region 25	Matl. 8 - Filter Sand	79,60,78,5,80	41
Region 26	Matl. 2 - Surficial Overburden Layer	80,5,12,21,26,81	167.7
Region 27	Matl. 9 Concrete Outfall Works	82,83,59,79,80,81,84,86	16
Region 28	Matl. 8 - Filter Sand	85,64,84,86	10.875
Region 29	Matl. 6 - Fine Drainage Gravel	63,85,86,82	10.875
Region 30	Matl. 6 - Fine Drainage Gravel	77,61,60,79	40
Region 31	Matl. 6 - Fine Drainage Gravel	62,77,79,59	1

Current Slip Surface

Slip Surface: 34,477
F of S: 2.189
Volume: 404.22326 ft³
Weight: 48,187.681 lbs
Resisting Moment: 1,005,505.2 lbs-ft
Activating Moment: 459,606.31 lbs-ft
Resisting Force: 26,471.78 lbs
Activating Force: 12,147.72 lbs
F of S Rank: 1
Exit: (-52.855517, 21.214828) ft
Entry: (0.07795467, 36.5) ft
Radius: 27.151985 ft
Center: (-36.118268, 51.904224) ft

Slip Slices

	X (ft)	Y (ft)	PWP (psf)	Base Normal Stress (psf)	Frictional Strength (psf)	Cohesive Strength (psf)
Slice 1	-52.677244	21.107414	-103.92866	33.785733	21.111669	0
Slice 2	-51.669131	20.5	-74.657354	224.17809	145.58295	0
Slice 3	-50.414495	19.74405	-34.344732	475.09688	332.66642	0
Slice 4	-49.394049	19.24405	-7.3918798	544.8653	381.51879	0
Slice 5	-47.584399	18.5026	41.321065	757.87545	465.33586	0
Slice 6	-45.618949	17.867383	82.884852	806.89565	401.32574	0
Slice 7	-44.130223	17.59435	100.50184	911.53097	449.56079	0
Slice 8	-42.655674	17.323917	118.16879	1,016.6039	498.01074	0
Slice 9	-40.820725	17.127625	132.41186	1,049.0281	508.08866	0
Slice 10	-38.625375	17.005475	143.10163	1,160.2299	563.80341	0
Slice 11	-36.4736	17.026525	145.26658	1,170.0053	568.02193	0

Slice 12	-34.3654	17.190775	138.47739	1,238.7137	609.87096	0
Slice 13	-32.299572	17.454675	125.02849	1,230.3891	612.71136	0
Slice 14	-30.234372	17.825725	104.21218	1,271.9178	647.26977	0
Slice 15	-27.985436	18.5075	63.53391	1,144.9723	702.29428	0
Slice 16	-26.128886	19.27235	17.214655	1,123.1071	774.35418	0
Slice 17	-25.035532	19.77235	-13.196474	1,045.351	731.96262	0
Slice 18	-24.573832	20.0155	-28.042782	1,042.6183	677.08424	0
Slice 19	-23.540895	20.5155	-58.60288	1,050.7918	682.39218	0
Slice 20	-21.850368	21.3317	-111.09211	1,029.4462	643.26941	0
Slice 21	-20.476323	21.9951	-152.19625	1,008.7544	630.33973	0
Slice 22	-18.969133	22.762967	-199.85861	960.04117	599.90031	0
Slice 23	-17.3288	23.6353	-254.12071	927.97629	579.86394	0
Slice 24	-15.688467	24.507633	-308.49445	895.91141	559.82758	0
Slice 25	-14.68415	25.047761	-342.19782	862.79383	539.13342	0
Slice 26	-13.75	25.575132	-365.44358	821.76613	533.66116	0
Slice 27	-12.25	26.421951	-398.66907	791.61375	514.07998	0
Slice 28	-11.39705	26.90348	-418.67221	789.03945	493.04657	0
Slice 29	-10.00125	27.78455	-471.64976	725.2354	453.17738	0
Slice 30	-7.8542	29.189939	-555.37682	647.64747	404.69505	0

Slice 31	-6.5614	30.071439	-607.39738	592.63303	370.31822	0
Slice 32	-6.0614	30.430099	-628.4982	498.55737	311.53322	0
Slice 33	-5.22885	31.238232	-676.57601	569.07391	355.59684	0
Slice 34	-3.68655	32.735299	-765.44513	446.1108	278.76096	0
Slice 35	-2.14425	34.232366	-854.43134	323.14769	201.92509	0
Slice 36	-1.1251761	35.24045	-914.58943	233.68424	146.02212	0
Slice 37	-0.39964874	36	-960.1009	169.97662	119.01891	0

Slope Stability DS Slope G&R (MSP LT SSS) (2)

Report generated using GeoStudio 2012. Copyright © 1991-2013 GEO-SLOPE International Ltd.

File Information

Title: LOWP PIR Analysis Section B
Created By: Viessman, Michael W CIV USARMY CESAJ (US)
Last Edited By: Viessman, Michael W CIV USARMY CESAJ (US)
Revision Number: 567
File Version: 8.2
Tool Version: 8.12.3.7901
Date: 8/26/2018
Time: 5:09:31 PM
File Name: Section B EOC USP w toe drain.gsz
Directory: C:\Users\k3engmwv\Documents\LOWP\FY17-18 PIR Work\SEEP and SLOPEW Files\
Last Solved Date: 8/26/2018
Last Solved Time: 4:10:46 PM

Project Settings

Length(L) Units: feet
Time(t) Units: Seconds
Force(F) Units: lbf
Pressure(p) Units: psf
Strength Units: psf
Unit Weight of Water: 62.4 pcf
View: 2D
Element Thickness: 1

Analysis Settings

Slope Stability DS Slope G&R (MSP LT SSS) (2)

Description: U/S MSP
Kind: SLOPE/W
Parent: Steady-State Seepage MSP (LT SSS) (2)
Method: Spencer
Settings
- Lambda
  - Lambda 1: -1
  - Lambda 2: -0.8
  - Lambda 3: -0.6

Lambda 4: -0.4
Lambda 5: -0.2
Lambda 6: 0
Lambda 7: 0.2
Lambda 8: 0.4
Lambda 9: 0.6
Lambda 10: 0.8
Lambda 11: 1
PWP Conditions Source: Parent Analysis
Slip Surface
Direction of movement: Right to Left
Use Passive Mode: No
Slip Surface Option: Grid and Radius
Critical slip surfaces saved: 1
Optimize Critical Slip Surface Location: Yes
Tension Crack
Tension Crack Option: (none)
F of S Distribution
F of S Calculation Option: Constant
Advanced
Number of Slices: 30
F of S Tolerance: 0.001
Minimum Slip Surface Depth: 1 ft
Optimization Maximum Iterations: 2,000
Optimization Convergence Tolerance: 1e-007
Starting Optimization Points: 8
Ending Optimization Points: 16
Complete Passes per Insertion: 1
Driving Side Maximum Convex Angle: 5 °
Resisting Side Maximum Convex Angle: 1 °

Materials

Matl. 1 - Embankment Material

Model: Mohr-Coulomb
Unit Weight: 125 pcf
Cohesion': 0 psf
Phi': 32 °
Phi-B: 0 °
Constant Unit Wt. Above Water Table: 120 pcf

Matl. 2 - Surficial Overburden Layer

Model: Mohr-Coulomb
Unit Weight: 109 pcf
Cohesion': 0 psf
Phi': 29 °

Phi-B: 0 °
Constant Unit Wt. Above Water Table: 106 pcf

Matl. 3 - Shallow Alluvial Deposits

Model: Mohr-Coulomb
Unit Weight: 123 pcf
Cohesion': 0 psf
Phi': 30 °
Phi-B: 0 °

Matl. 4 - Deeper Marine Deposits

Model: Mohr-Coulomb
Unit Weight: 125 pcf
Cohesion': 0 psf
Phi': 33 °
Phi-B: 0 °

Matl. 5 - Soil Cement Armoring

Model: Mohr-Coulomb
Unit Weight: 125 pcf
Cohesion': 0 psf
Phi': 35 °
Phi-B: 0 °
Constant Unit Wt. Above Water Table: 120 pcf

Matl. 6 - Fine Drainage Gravel

Model: Mohr-Coulomb
Unit Weight: 130 pcf
Cohesion': 0 psf
Phi': 35 °
Phi-B: 0 °
Constant Unit Wt. Above Water Table: 115 pcf

Matl. 8 - Filter Sand

Model: Mohr-Coulomb
Unit Weight: 120 pcf
Cohesion': 0 psf
Phi': 33 °
Phi-B: 0 °
Constant Unit Wt. Above Water Table: 115 pcf

Matl. 9 Concrete Outfall Works

Model: Bedrock (Impenetrable)

Slip Surface Grid

Upper Left: (-95.9639, 117.4947) ft

Lower Left: (-95.9639, 39.4108) ft
Lower Right: (10.9033, 39.4108) ft
Grid Horizontal Increment: 25
Grid Vertical Increment: 25
Left Projection Angle: 0 °
Right Projection Angle: 0 °

Slip Surface Radius

Upper Left Coordinate: (-120.2029, 18.4347) ft
Upper Right Coordinate: (10.6382, 18.6036) ft
Lower Left Coordinate: (-120.08, -21.0305) ft
Lower Right Coordinate: (9.6866, -21.2416) ft
Number of Increments: 50
Left Projection: No
Left Projection Angle: 135 °
Right Projection: No
Right Projection Angle: 45 °

Slip Surface Limits

Left Coordinate: (-1,200, 18) ft
Right Coordinate: (1,100, 18) ft

Surcharge Loads

Surcharge Load 1

Surcharge (Unit Weight): 200 pcf
Direction: Vertical

Coordinates

	X (ft)	Y (ft)
	-6	37.5
	6	37.5

Points

	X (ft)	Y (ft)
Point 1	-53.5	21
Point 2	-14.5	21
Point 3	-14.5	30
Point 4	-11.5	30

Point 5	-11.5	18
Point 6	-7	36.5
Point 7	-7	35.5
Point 8	6.8	35.5
Point 9	14	33
Point 10	13.7	32.1
Point 11	48.6	20.5
Point 12	51.2	18
Point 13	52.0033	19.4828
Point 14	51.9	19.4
Point 15	51.8636	19.2065
Point 16	52.097	19.0075
Point 17	52.3031	19.0832
Point 18	52.3561	19.2916
Point 19	52.3	19.4
Point 20	52.1797	19.4906
Point 21	59.3	18
Point 22	56.3	19
Point 23	54.8	19.5
Point 24	58	19.5
Point 25	7	36.5
Point 26	59.3	16.5
Point 27	67.3	16.5
Point 28	67.3	14.5
Point 29	69.3	14.5
Point 30	69.3	16.5
Point 31	69.3	18
Point 32	62.5	18
Point 33	59.5	19
Point 34	-90	18
Point 35	-90	16.5
Point 36	100	18
Point 37	100	16.5
Point 38	100	-11.4
Point 39	-90	-11.4
Point 40	100	-111.5

Point 41	-90	-111.5
Point 42	-139	18
Point 43	-127	22
Point 44	-113	22
Point 45	-101	18
Point 46	-180	18
Point 47	-180	16.5
Point 48	-180	-11.5
Point 49	-180	-111.5
Point 50	1,100	18
Point 51	1,100	16.5
Point 52	1,100	-11.5
Point 53	1,100	-111.5
Point 54	52.3546	19.1839
Point 55	51.9487	19.066
Point 56	52.2227	19.0254
Point 57	-1,200	-11.5
Point 58	-1,200	-111.5
Point 59	-53.5	19
Point 60	-12.5	19
Point 61	-12.5	20
Point 62	-53.5	20
Point 63	-77	18
Point 64	-77	16.5
Point 65	-1,200	16.5
Point 66	-234.5	16.5
Point 67	-290	-2
Point 68	-320	-2
Point 69	-375.5	16.5
Point 70	-230	18
Point 71	-1,200	18
Point 72	-380	18
Point 73	-365	13
Point 74	-245	13
Point 75	41.5	25
Point 76	-52.5	21

Point 77	-52.5	20
Point 78	-11.5	19
Point 79	-52.5	19
Point 80	-52.5	18
Point 81	-52.5	16.5
Point 82	-62.5	18
Point 83	-53.5	18
Point 84	-62.5	16.5
Point 85	-77	17.25
Point 86	-62.5	17.25
Point 87	29.5	29

Regions

	Material	Points	Area (ft^2)
Region 1	Matl. 1 - Embankment Material	1,6,7,8,9,10,11,12,5,78,4,3,2,76	993.93
Region 2		13,14,15,55,16,56,17,54,18,19,20	0.18474
Region 3	Matl. 8 - Filter Sand	9,10,11,12,21,22,16,55,15,14,13,20,23	49.637
Region 4	Matl. 5 - Soil Cement Armoring	6,7,8,9,23,24,75,87,25	69.1
Region 5	Matl. 5 - Soil Cement Armoring	22,21,26,27,28,29,30,31,32,33	22.2
Region 6	Matl. 2 - Surficial Overburden Layer	31,36,37,30	46.05
Region 7	Matl. 4 - Deeper Marine Deposits	39,38,40,41	19,019
Region 8	Matl. 1 - Embankment Material	42,43,44,45	104
Region 9	Matl. 2 - Surficial Overburden Layer	46,42,45,34,35,47	135
Region 10	Matl. 3 - Shallow Alluvial Deposits	47,35,39,48	2,515.5
Region 11	Matl. 4 - Deeper Marine Deposits	48,39,41,49	9,004.5

Region 12	Matl. 2 - Surficial Overburden Layer	36,50,51,37	1,500
Region 13	Matl. 3 - Shallow Alluvial Deposits	37,51,52,38	27,950
Region 14	Matl. 4 - Deeper Marine Deposits	38,52,53,40	1.0005e+005
Region 15	Matl. 8 - Filter Sand	20,23,22,16,56,17,54,18,19	1.5978
Region 16	Matl. 5 - Soil Cement Armoring	23,24,33,22	1.6
Region 17	Matl. 4 - Deeper Marine Deposits	57,48,49,58	1.02e+005
Region 18	Matl. 3 - Shallow Alluvial Deposits	35,39,38,37,30,29,28,27,26,81,84,64	5,297
Region 19	Matl. 2 - Surficial Overburden Layer	34,35,64,85,63	19.5
Region 20	Matl. 3 - Shallow Alluvial Deposits	65,57,48,47,66,74,67,68,73,69	26,978
Region 21	Matl. 2 - Surficial Overburden Layer	66,70,46,47	78.375
Region 22	Matl. 2 - Surficial Overburden Layer	71,65,69,72	1,233.4
Region 23	Matl. 9 Concrete Outfall Works	76,77,62,1	1
Region 24	Matl. 8 - Filter Sand	76,2,3,4,78,60,61,77	69
Region 25	Matl. 8 - Filter Sand	79,60,78,5,80	41
Region 26	Matl. 2 - Surficial Overburden Layer	80,5,12,21,26,81	167.7
Region 27	Matl. 9 Concrete Outfall Works	82,83,59,79,80,81,84,86	16
Region 28	Matl. 8 - Filter Sand	85,64,84,86	10.875
Region 29	Matl. 6 - Fine Drainage Gravel	63,85,86,82	10.875
Region 30	Matl. 6 - Fine Drainage Gravel	77,61,60,79	40

Region 31	Matl. 6 - Fine Drainage Gravel	62,77,79,59	1

Current Slip Surface

Slip Surface: 34,477
F of S: 2.148
Volume: 409.62171 ft³
Weight: 48,969.287 lbs
Resisting Moment: 993,017.9 lbs-ft
Activating Moment: 462,657.75 lbs-ft
Resisting Force: 25,861.578 lbs
Activating Force: 12,103.655 lbs
F of S Rank: 1
Exit: (-52.858144, 21.213952) ft
Entry: (-0.27768768, 36.5) ft
Radius: 27.212226 ft
Center: (-36.118268, 51.904224) ft

Slip Slices

	X (ft)	Y (ft)	PWP (psf)	Base Normal Stress (psf)	Frictional Strength (psf)	Cohesive Strength (psf)
Slice 1	-52.677611	21.106976	-83.56868	33.604077	20.998158	0
Slice 2	-51.653277	20.5	-68.772611	223.62932	145.22658	0
Slice 3	-50.010988	19.52685	-7.5724402	544.04235	380.94255	0
Slice 4	-49.145536	19.02685	26.958025	593.42791	396.64649	0
Slice 5	-47.831576	18.5	64.218891	740.82662	439.3942	0
Slice 6	-46.44554	17.94425	103.26154	872.57234	426.43594	0
Slice 7	-45.2175	17.645375	127.00687	876.08393	415.22019	0
Slice 8	-43.0395	17.159125	166.69019	1,042.1581	485.27978	0
Slice 9	-40.92385	16.844925	194.81569	1,091.1597	496.85162	0

Slice 10	-38.87055	16.702775	210.91897	1,198.7677	547.57348	0
Slice 11	-37.000133	16.696833	216.72309	1,189.3304	539.12501	0
Slice 12	-35.3126	16.8271	211.80348	1,244.4632	572.41264	0
Slice 13	-33.625067	16.957367	206.51725	1,301.3308	606.86505	0
Slice 14	-32.0116	17.185267	193.20056	1,258.3236	590.40731	0
Slice 15	-30.4722	17.5108	171.52951	1,283.674	616.47178	0
Slice 16	-28.9328	17.836333	149.04766	1,309.036	642.99201	0
Slice 17	-27.3572	18.3417	117.22522	1,184.9962	693.41858	0
Slice 18	-26.249004	18.84215	87.502465	1,119.2566	670.02895	0
Slice 19	-24.989166	19.5	48.279709	1,085.4289	726.2197	0
Slice 20	-23.824412	20.1082	12.038683	1,061.504	681.53071	0
Slice 21	-22.873585	20.6082	-17.802684	1,042.1364	676.77131	0
Slice 22	-21.178102	21.501525	-71.459952	1,013.8979	633.55372	0
Slice 23	-19.274367	22.504575	-132.20726	977.52944	610.82819	0
Slice 24	-17.45895	23.490525	-192.61465	925.50676	578.32081	0
Slice 25	-15.73185	24.459375	-252.73258	887.29853	554.44566	0
Slice 26	-14.68415	25.053147	-289.88898	850.9536	531.73482	0
Slice 27	-13.5404	25.732297	-302.85505	803.00377	521.47674	0
Slice 28	-12.0404	26.632623	-317.75669	762.2239	494.99399	0

Slice 29	-10.5972	27.515323	-355.80141	739.76811	462.25842	0
Slice 30	-9.0208	28.5248	-410.93961	673.84699	421.06633	0
Slice 31	-7.6736	29.439399	-459.47645	630.88413	394.22016	0
Slice 32	-6.6372	30.142999	-495.87506	586.67219	366.59347	0
Slice 33	-6.1372	30.527056	-515.81145	484.37972	302.67404	0
Slice 34	-5.2196167	31.448361	-564.94824	544.82537	340.44467	0
Slice 35	-3.65885	33.015456	-648.3203	417.74072	261.03338	0
Slice 36	-2.0980833	34.582552	-732.81358	290.65608	181.62208	0
Slice 37	-1.2562935	35.43305	-779.6567	214.8436	134.24918	0
Slice 38	-0.73628734	36	-811.42494	167.08793	116.99623	0

Slope Stability US Slope G&R (RDD)

Report generated using GeoStudio 2012. Copyright © 1991-2013 GEO-SLOPE International Ltd.

File Information

Title: LOWP PIR Analysis Section B
Created By: Viessman, Michael W CIV USARMY CESAJ (US)
Last Edited By: Viessman, Michael W CIV USARMY CESAJ (US)
Revision Number: 594
File Version: 8.2
Tool Version: 8.12.3.7901
Date: 8/27/2018
Time: 10:31:26 AM
File Name: Section B EOC USP w toe drain.gsz
Directory: C:\Users\k3engmwv\Documents\LOWP\FY17-18 PIR Work\SEEP and SLOPEW Files\
Last Solved Date: 8/27/2018
Last Solved Time: 9:35:04 AM

Project Settings

Length(L) Units: feet
Time(t) Units: Seconds
Force(F) Units: lbf
Pressure(p) Units: psf
Strength Units: psf
Unit Weight of Water: 62.4 pcf
View: 2D
Element Thickness: 1

Analysis Settings

Slope Stability US Slope G&R (RDD)

Description: U/S NP
Kind: SLOPE/W
Method: Spencer
Settings
Lambda
Lambda 1: -1
Lambda 2: -0.8
Lambda 3: -0.6
Lambda 4: -0.4
Lambda 5: -0.2
Lambda 6: 0
Lambda 7: 0.2

Lambda 8: 0.4
Lambda 9: 0.6
Lambda 10: 0.8
Lambda 11: 1
PWP Conditions Source: Piezometric Line
Apply Phreatic Correction: Yes
Use Staged Rapid Drawdown: Yes
Slip Surface
Direction of movement: Left to Right
Use Passive Mode: No
Slip Surface Option: Grid and Radius
Critical slip surfaces saved: 1
Optimize Critical Slip Surface Location: Yes
Tension Crack
Tension Crack Option: (none)
F of S Distribution
F of S Calculation Option: Constant
Advanced
Number of Slices: 30
F of S Tolerance: 0.001
Minimum Slip Surface Depth: 1 ft
Optimization Maximum Iterations: 2,000
Optimization Convergence Tolerance: 1e-007
Starting Optimization Points: 8
Ending Optimization Points: 16
Complete Passes per Insertion: 1
Driving Side Maximum Convex Angle: 5 °
Resisting Side Maximum Convex Angle: 1 °

Materials

Matl. 1 - Embankment Material

Model: Mohr-Coulomb
Unit Weight: 125 pcf
Cohesion': 0 psf
Phi': 32 °
Phi-B: 0 °
Total Cohesion: 420 psf
Total Phi: 0 °
Constant Unit Wt. Above Water Table: 120 pcf
Pore Water Pressure
Piezometric Line: 1
Piezometric Line After Drawdown: 2

Matl. 2 - Surficial Overburden Layer

Model: Mohr-Coulomb

Unit Weight: 109 pcf
Cohesion': 0 psf
Phi': 29 °
Phi-B: 0 °
Total Cohesion: 420 psf
Total Phi: 0 °
Constant Unit Wt. Above Water Table: 106 pcf
Pore Water Pressure
Piezometric Line: 1
Piezometric Line After Drawdown: 2

Matl. 3 - Shallow Alluvial Deposits

Model: Mohr-Coulomb
Unit Weight: 123 pcf
Cohesion': 0 psf
Phi': 30 °
Phi-B: 0 °
Total Cohesion: 420 psf
Total Phi: 0 °
Pore Water Pressure
Piezometric Line: 1
Piezometric Line After Drawdown: 2

Matl. 4 - Deeper Marine Deposits

Model: Mohr-Coulomb
Unit Weight: 125 pcf
Cohesion': 0 psf
Phi': 33 °
Phi-B: 0 °
Total Cohesion: 420 psf
Total Phi: 0 °
Pore Water Pressure
Piezometric Line: 1
Piezometric Line After Drawdown: 2

Matl. 5 - Soil Cement Armoring

Model: Mohr-Coulomb
Unit Weight: 125 pcf
Cohesion': 0 psf
Phi': 35 °
Phi-B: 0 °
Total Cohesion: 2,500 psf
Total Phi: 0 °
Constant Unit Wt. Above Water Table: 120 pcf
Pore Water Pressure
Piezometric Line: 1
Piezometric Line After Drawdown: 2

Matl. 6 - Fine Drainage Gravel

Model: Mohr-Coulomb
Unit Weight: 130 pcf
Cohesion': 0 psf
Phi': 35 °
Phi-B: 0 °
Total Cohesion: 750 psf
Total Phi: 0 °
Constant Unit Wt. Above Water Table: 115 pcf
Pore Water Pressure
    Piezometric Line: 1
    Piezometric Line After Drawdown: 2

Matl. 8 - Filter Sand

Model: Mohr-Coulomb
Unit Weight: 120 pcf
Cohesion': 0 psf
Phi': 33 °
Phi-B: 0 °
Total Cohesion: 500 psf
Total Phi: 0 °
Constant Unit Wt. Above Water Table: 115 pcf
Pore Water Pressure
    Piezometric Line: 1
    Piezometric Line After Drawdown: 2

Matl. 9 Concrete Outfall Works

Model: Bedrock (Impenetrable)
Pore Water Pressure
    Piezometric Line: 1
    Piezometric Line After Drawdown: 2

Slip Surface Grid

Upper Left: (15.4361, 113.5947) ft
Lower Left: (15.4361, 35.5108) ft
Lower Right: (122.3033, 35.5108) ft
Grid Horizontal Increment: 25
Grid Vertical Increment: 25
Left Projection Angle: 0 °
Right Projection Angle: 0 °

Slip Surface Radius

Upper Left Coordinate: (12.5971, 17.7347) ft
Upper Right Coordinate: (143.4382, 17.9036) ft
Lower Left Coordinate: (12.72, -21.7305) ft

Lower Right Coordinate: (142.4866, -21.9416) ft
Number of Increments: 50
Left Projection: No
Left Projection Angle: 135 °
Right Projection: No
Right Projection Angle: 45 °

Slip Surface Limits

Left Coordinate: (-1,200, 18) ft
Right Coordinate: (1,100, 18) ft

Piezometric Lines

Piezometric Line 1

Coordinates

	X (ft)	Y (ft)
Coordinate 1	-1,200	14.4
Coordinate 2	-364	13
Coordinate 3	-245	13
Coordinate 4	-77	18
Coordinate 5	-53.5	18
Coordinate 6	-53.5	19
Coordinate 7	-11.5	19.7
Coordinate 8	-8.4	20
Coordinate 9	18.7	21.5
Coordinate 10	37	23
Coordinate 11	39.6	23.5
Coordinate 12	41.5	25
Coordinate 13	1,100	25

Piezometric Line 2

Coordinates

	X (ft)	Y (ft)
Coordinate 1	-1,200	14.4
Coordinate 2	-364	13
Coordinate 3	-245	13

Coordinate 4	-77	18
Coordinate 5	1,100	18

Surcharge Loads

Surcharge Load 1

Surcharge (Unit Weight): 200 pcf
Direction: Vertical

Coordinates

	X (ft)	Y (ft)
	-6	37.5
	6	37.5

Points

	X (ft)	Y (ft)
Point 1	-53.5	21
Point 2	-14.5	21
Point 3	-14.5	30
Point 4	-11.5	30
Point 5	-11.5	18
Point 6	-7	36.5
Point 7	-7	35.5
Point 8	6.8	35.5
Point 9	14	33
Point 10	13.7	32.1
Point 11	48.6	20.5
Point 12	51.2	18
Point 13	52.0033	19.4828
Point 14	51.9	19.4
Point 15	51.8636	19.2065
Point 16	52.097	19.0075
Point 17	52.3031	19.0832
Point 18	52.3561	19.2916
Point 19	52.3	19.4

Point 20	52.1797	19.4906
Point 21	59.3	18
Point 22	56.3	19
Point 23	54.8	19.5
Point 24	58	19.5
Point 25	7	36.5
Point 26	59.3	16.5
Point 27	67.3	16.5
Point 28	67.3	14.5
Point 29	69.3	14.5
Point 30	69.3	16.5
Point 31	69.3	18
Point 32	62.5	18
Point 33	59.5	19
Point 34	-90	18
Point 35	-90	16.5
Point 36	100	18
Point 37	100	16.5
Point 38	100	-11.4
Point 39	-90	-11.4
Point 40	100	-111.5
Point 41	-90	-111.5
Point 42	-139	18
Point 43	-127	22
Point 44	-113	22
Point 45	-101	18
Point 46	-180	18
Point 47	-180	16.5
Point 48	-180	-11.5
Point 49	-180	-111.5
Point 50	1,100	18
Point 51	1,100	16.5
Point 52	1,100	-11.5
Point 53	1,100	-111.5
Point 54	52.3546	19.1839
Point 55	51.9487	19.066

Point 56	52.2227	19.0254
Point 57	-1,200	-11.5
Point 58	-1,200	-111.5
Point 59	-53.5	19
Point 60	-12.5	19
Point 61	-12.5	20
Point 62	-53.5	20
Point 63	-77	18
Point 64	-77	16.5
Point 65	-1,200	16.5
Point 66	-234.5	16.5
Point 67	-290	-2
Point 68	-320	-2
Point 69	-375.5	16.5
Point 70	-230	18
Point 71	-1,200	18
Point 72	-380	18
Point 73	-365	13
Point 74	-245	13
Point 75	41.5	25
Point 76	-52.5	21
Point 77	-52.5	20
Point 78	-11.5	19
Point 79	-52.5	19
Point 80	-52.5	18
Point 81	-52.5	16.5
Point 82	-62.5	18
Point 83	-53.5	18
Point 84	-62.5	16.5
Point 85	-77	17.25
Point 86	-62.5	17.25
Point 87	29.5	29

Regions

	Material	Points	Area (ft^2)

Region 1	Matl. 1 - Embankment Material	1,6,7,8,9,10,11,12,5,78,4,3,2,76	993.93
Region 2		13,14,15,55,16,56,17,54,18,19,20	0.18474
Region 3	Matl. 8 - Filter Sand	9,10,11,12,21,22,16,55,15,14,13,20,23	49.637
Region 4	Matl. 5 - Soil Cement Armoring	6,7,8,9,23,24,75,87,25	69.1
Region 5	Matl. 5 - Soil Cement Armoring	22,21,26,27,28,29,30,31,32,33	22.2
Region 6	Matl. 2 - Surficial Overburden Layer	31,36,37,30	46.05
Region 7	Matl. 4 - Deeper Marine Deposits	39,38,40,41	19,019
Region 8	Matl. 1 - Embankment Material	42,43,44,45	104
Region 9	Matl. 2 - Surficial Overburden Layer	46,42,45,34,35,47	135
Region 10	Matl. 3 - Shallow Alluvial Deposits	47,35,39,48	2,515.5
Region 11	Matl. 4 - Deeper Marine Deposits	48,39,41,49	9,004.5
Region 12	Matl. 2 - Surficial Overburden Layer	36,50,51,37	1,500
Region 13	Matl. 3 - Shallow Alluvial Deposits	37,51,52,38	27,950
Region 14	Matl. 4 - Deeper Marine Deposits	38,52,53,40	1.0005e+005
Region 15	Matl. 8 - Filter Sand	20,23,22,16,56,17,54,18,19	1.5978
Region 16	Matl. 5 - Soil Cement Armoring	23,24,33,22	1.6
Region 17	Matl. 4 - Deeper Marine Deposits	57,48,49,58	1.02e+005
Region 18	Matl. 3 - Shallow Alluvial Deposits	35,39,38,37,30,29,28,27,26,81,84,64	5,297
Region 19	Matl. 2 - Surficial Overburden Layer	34,35,64,85,63	19.5

Region 20	Matl. 3 - Shallow Alluvial Deposits	65,57,48,47,66,74,67,68,73,69	26,978
Region 21	Matl. 2 - Surficial Overburden Layer	66,70,46,47	78.375
Region 22	Matl. 2 - Surficial Overburden Layer	71,65,69,72	1,233.4
Region 23	Matl. 9 Concrete Outfall Works	76,77,62,1	1
Region 24	Matl. 8 - Filter Sand	76,2,3,4,78,60,61,77	69
Region 25	Matl. 8 - Filter Sand	79,60,78,5,80	41
Region 26	Matl. 2 - Surficial Overburden Layer	80,5,12,21,26,81	167.7
Region 27	Matl. 9 Concrete Outfall Works	82,83,59,79,80,81,84,86	16
Region 28	Matl. 8 - Filter Sand	85,64,84,86	10.875
Region 29	Matl. 6 - Fine Drainage Gravel	63,85,86,82	10.875
Region 30	Matl. 6 - Fine Drainage Gravel	77,61,60,79	40
Region 31	Matl. 6 - Fine Drainage Gravel	62,77,79,59	1

Current Slip Surface

Slip Surface: 9,609
F of S: 1.299
Volume: 1,594.1797 ft³
Weight: 192,287.02 lbs
Resisting Moment: 2,755,626.7 lbs-ft
Activating Moment: 2,121,237.3 lbs-ft
Resisting Force: 42,722.363 lbs
Activating Force: 33,108.325 lbs
F of S Rank: 2
Exit: (80.087583, 18) ft
Entry: (-9.8585998, 35.547133) ft
Radius: 55.421986 ft
Center: (41.084228, 57.374292) ft

Slip Slices

	X (ft)	Y (ft)	PWP (psf)	Base Normal Stress (psf)	Frictional Strength (psf)	Cohesive Strength (psf)
Slice 1	-9.1292999	33.981653	-997.25514	95.509534	59.680981	0
Slice 2	-7.7	31.115686	-818.4188	295.48558	184.63988	0
Slice 3	-6.5	28.977359	-684.98717	456.37803	285.17664	0
Slice 4	-4.5617985	26.044149	-501.95492	846.07585	0	426.69456
Slice 5	-1.6853955	22.200022	-262.08136	1,280.1831	0	498.24235
Slice 6	0.91683959	19.225631	-76.479385	1,640.7513	0	546.72778
Slice 7	2.8683259	17.25	46.8	1,899.5323	0	548.41615
Slice 8	4.8278894	15.485494	156.90518	2,124.5508	0	573.32485
Slice 9	6.4	14.150018	240.23888	2,140.4347	0	561.13685
Slice 10	6.9	13.750686	265.15718	2,195.0308	0	565.75131
Slice 11	8.675	12.463583	345.47245	2,317.5875	0	571.6826
Slice 12	12.025	10.222552	485.31275	2,519.831	0	580.12195
Slice 13	13.85	9.1056301	555.00868	2,615.1382	0	583.35559
Slice 14	15.175	8.3993858	599.07833	2,670.9945	0	584.57193
Slice 15	17.525	7.2257725	672.31179	2,764.1262	0	586.38481
Slice 16	20.05	6.1197471	741.32778	2,844.7628	0	587.39739
Slice 17	22.75	5.0923064	805.44008	2,911.6384	0	585.60796

Slice 18	25.45	4.221801	859.75962	2,958.504	0	581.78142
Slice 19	28.15	3.5005994	904.7626	2,986.0218	0	576.66383
Slice 20	30.75	2.9391795	939.7952	2,994.6578	0	569.92552
Slice 21	33.25	2.5233389	965.74365	2,986.9774	0	561.77926
Slice 22	35.75	2.2239026	984.42848	2,963.6702	0	552.15169
Slice 23	38.3	2.0375921	996.05425	2,924.0828	0	545.92683
Slice 24	40.059413	1.9636867	1,000.666	2,896.6351	0	618.52976
Slice 25	41.009413	1.9545276	1,001.2375	2,874.1535	0	610.02831
Slice 26	43.275	2.0241202	996.8949	2,796.0303	0	502.3508
Slice 27	46.825	2.2793261	980.97005	2,670.2249	0	495.05776
Slice 28	49.9	2.6737908	956.35545	2,533.3249	0	485.64391
Slice 29	51.5318	2.9469951	939.30751	2,449.2692	0	479.46161
Slice 30	51.8818	3.0143007	935.10764	2,416.216	0	475.28933
Slice 31	51.92435	3.0227722	934.57901	2,390.6839	0	470.74405
Slice 32	51.976	3.0331005	933.93453	2,376.4315	0	468.38274
Slice 33	52.05015	3.0480292	933.00298	2,365.8989	0	466.86176
Slice 34	52.13835	3.0659025	931.88768	2,359.2071	0	466.15375
Slice 35	52.2012	3.0787212	931.0878	2,358.8203	0	466.47604
Slice 36	52.2629	3.0914018	930.29653	2,365.0874	0	468.04995

Slice 37	52.3296	3.1051715	929.4373	2,382.2378	0	471.71366
Slice 38	53.57805	3.3934822	911.44671	2,338.8669	0	471.81808
Slice 39	55.55	3.8791112	881.14346	2,223.7369	0	463.55723
Slice 40	57.15	4.3394098	852.42083	2,119.825	0	455.85179
Slice 41	58.65	4.814131	822.79823	2,016.5968	0	447.90179
Slice 42	59.4	5.0663783	807.05799	1,990.6115	0	448.65756
Slice 43	61	5.6792764	768.81315	1,861.0702	0	437.97563
Slice 44	63.7	6.7937074	699.27266	1,681.1543	0	418.73268
Slice 45	66.1	7.9374738	627.90164	1,559.952	0	408.78547
Slice 46	68.3	9.1085654	554.82552	1,435.367	0	398.38156
Slice 47	70.835446	10.650121	458.63242	1,221.5324	0	374.9862
Slice 48	73.906339	12.757343	327.14181	963.26213	0	348.84238
Slice 49	76.977231	15.193441	175.12929	569.1953	227.51412	0
Slice 50	79.30013	17.25	46.8	152.36103	58.513436	0

Slope Stability US Slope G&R (EOC)

Report generated using GeoStudio 2012. Copyright © 1991-2013 GEO-SLOPE International Ltd.

File Information

Title: LOWP PIR Analysis Section H
Created By: Viessman, Michael W CIV USARMY CESAJ (US)
Last Edited By: Viessman, Michael W CIV USARMY CESAJ (US)
Revision Number: 548
File Version: 8.2
Tool Version: 8.12.3.7901
Date: 8/26/2018
Time: 9:18:38 PM
File Name: Section H EOC USP-DSP w toe drain.gsz
Directory: C:\Users\k3engmwv\Documents\LOWP\FY17-18 PIR Work\SEEP and SLOPEW Files\
Last Solved Date: 8/26/2018
Last Solved Time: 8:24:02 PM

Project Settings

Length(L) Units: feet
Time(t) Units: Seconds
Force(F) Units: lbf
Pressure(p) Units: psf
Strength Units: psf
Unit Weight of Water: 62.4 pcf
View: 2D
Element Thickness: 1

Analysis Settings

Slope Stability US Slope G&R (EOC)

Description: No U/S pool, No D/S pool
Kind: SLOPE/W
Parent: Steady-State Seepage (EOC)
Method: Spencer
Settings
    Lambda
        Lambda 1: -1
        Lambda 2: -0.8
        Lambda 3: -0.6
        Lambda 4: -0.4
        Lambda 5: -0.2
        Lambda 6: 0

Lambda 7: 0.2
Lambda 8: 0.4
Lambda 9: 0.6
Lambda 10: 0.8
Lambda 11: 1
PWP Conditions Source: Parent Analysis
Slip Surface
Direction of movement: Left to Right
Use Passive Mode: No
Slip Surface Option: Grid and Radius
Critical slip surfaces saved: 1
Optimize Critical Slip Surface Location: Yes
Tension Crack
Tension Crack Option: (none)
F of S Distribution
F of S Calculation Option: Constant
Advanced
Number of Slices: 30
F of S Tolerance: 0.001
Minimum Slip Surface Depth: 1 ft
Optimization Maximum Iterations: 2,000
Optimization Convergence Tolerance: 1e-007
Starting Optimization Points: 8
Ending Optimization Points: 16
Complete Passes per Insertion: 1
Driving Side Maximum Convex Angle: 5 °
Resisting Side Maximum Convex Angle: 1 °

Materials

Matl. 1 - Embankment Material

Model: Mohr-Coulomb
Unit Weight: 125 pcf
Cohesion': 0 psf
Phi': 32 °
Phi-B: 0 °
Constant Unit Wt. Above Water Table: 120 pcf

Matl. 2 - Surficial Overburden Layer

Model: Mohr-Coulomb
Unit Weight: 109 pcf
Cohesion': 0 psf
Phi': 29 °
Phi-B: 0 °
Constant Unit Wt. Above Water Table: 106 pcf

Matl. 3 - Shallow Alluvial Deposits

Model: Mohr-Coulomb
Unit Weight: 123 pcf
Cohesion': 0 psf
Phi': 30 °
Phi-B: 0 °

Matl. 4 - Deeper Marine Deposits

Model: Mohr-Coulomb
Unit Weight: 125 pcf
Cohesion': 0 psf
Phi': 33 °
Phi-B: 0 °

Matl. 5 - Soil Cement Armoring

Model: Mohr-Coulomb
Unit Weight: 125 pcf
Cohesion': 0 psf
Phi': 35 °
Phi-B: 0 °
Constant Unit Wt. Above Water Table: 120 pcf

Matl. 6 - Fine Drainage Gravel

Model: Mohr-Coulomb
Unit Weight: 130 pcf
Cohesion': 0 psf
Phi': 35 °
Phi-B: 0 °
Constant Unit Wt. Above Water Table: 115 pcf

Matl. 8 - Filter Sand

Model: Mohr-Coulomb
Unit Weight: 120 pcf
Cohesion': 0 psf
Phi': 33 °
Phi-B: 0 °
Constant Unit Wt. Above Water Table: 115 pcf

Matl. 9 Concrete Outfall Works

Model: Bedrock (Impenetrable)

Slip Surface Grid

Upper Left: (45.7361, 199.5947) ft
Lower Left: (45.7361, 121.5108) ft
Lower Right: (152.6033, 121.5108) ft
Grid Horizontal Increment: 25

Grid Vertical Increment: 25
Left Projection Angle: 0 °
Right Projection Angle: 0 °

Slip Surface Radius

Upper Left Coordinate: (13.4971, 14.6347) ft
Upper Right Coordinate: (144.3382, 14.8036) ft
Lower Left Coordinate: (13.62, -24.8305) ft
Lower Right Coordinate: (143.3866, -25.0416) ft
Number of Increments: 50
Left Projection: No
Left Projection Angle: 135 °
Right Projection: No
Right Projection Angle: 45 °

Slip Surface Limits

Left Coordinate: (-1,700, 15) ft
Right Coordinate: (1,600, 15) ft

Surcharge Loads

Surcharge Load 1

Surcharge (Unit Weight): 200 pcf
Direction: Vertical

Coordinates

	X (ft)	Y (ft)
	-6	35.5
	6	35.5

Points

	X (ft)	Y (ft)
Point 1	-56.5	18
Point 2	-14.5	18
Point 3	-14.5	28
Point 4	-11.5	28
Point 5	-11.5	15
Point 6	-7	34.5

Point 7	-7	33.4
Point 8	6.8	33.4
Point 9	14	31
Point 10	13.7	30.1
Point 11	51.6	17.5
Point 12	54.2	15
Point 13	55.0033	16.4828
Point 14	54.9	16.4
Point 15	54.8636	16.2065
Point 16	55.097	16.0075
Point 17	55.3031	16.0832
Point 18	55.3561	16.2916
Point 19	55.3	16.4
Point 20	55.1797	16.4906
Point 21	62.3	15
Point 22	59.3	16
Point 23	57.8	16.5
Point 24	61	16.5
Point 25	7	34.5
Point 26	62.3	13.5
Point 27	70.3	13.5
Point 28	70.3	11.5
Point 29	72.3	11.5
Point 30	72.3	13.5
Point 31	72.3	15
Point 32	65.5	15
Point 33	62.5	16
Point 34	-90.5	13.5
Point 35	100	15
Point 36	100	13.5
Point 37	100	-14.5
Point 38	-90.5	-14.5
Point 39	100	-114.5
Point 40	-90.5	-114.5
Point 41	-180	15
Point 42	-180	13.5

Point 43	-180	-14.5
Point 44	-180	-114.5
Point 45	1,600	15
Point 46	1,600	13.5
Point 47	1,600	-14.5
Point 48	1,600	-114.5
Point 49	41.5	23
Point 50	55.3546	16.1839
Point 51	54.9487	16.066
Point 52	55.2227	16.0254
Point 53	-1,700	15
Point 54	-1,700	13.5
Point 55	-1,700	-14.5
Point 56	-1,700	-114.5
Point 57	-65.5	13.5
Point 58	-55.5	13.5
Point 59	-55.5	15
Point 60	-55.5	16
Point 61	-55.5	17
Point 62	-55.5	18
Point 63	-11.5	16
Point 64	-12.5	16
Point 65	-12.5	17
Point 66	-56.5	16
Point 67	-56.5	17
Point 68	-65.5	15
Point 69	-56.5	15
Point 70	-70.5	13.5
Point 71	-70.5	14.25
Point 72	-65.5	14.25
Point 73	-70.5	15
Point 74	-85.5	13.5
Point 75	-85.5	14.25
Point 76	-85.5	15
Point 77	-90.5	15
Point 78	-85.9	13.5

Point 79	-85.9	14.25
Point 80	-88.1	15
Point 81	-85.8	15
Point 82	-100.1	19
Point 83	-97.8	19
Point 84	-102.5	19
Point 85	-128.5	15
Point 86	-116.5	19
Point 87	-85.9	15
Point 88	-119.5	18
Point 89	-99.5	18
Point 90	-94.8	18
Point 91	29.5	27

Regions

	Material	Points	Area (ft²)
Region 1	Matl. 1 - Embankment Material	1,6,7,8,9,10,11,12,5,63,4,3,2,62	1,101.7
Region 2		13,14,15,51,16,52,17,50,18,19,20	0.18474
Region 3	Matl. 8 - Filter Sand	9,10,11,12,21,22,16,51,15,14,13,20,23	52.737
Region 4	Matl. 5 - Soil Cement Armoring	6,7,8,9,23,24,49,91,25	74.19
Region 5	Matl. 5 - Soil Cement Armoring	22,21,26,27,28,29,30,31,32,33	22.2
Region 6	Matl. 2 - Surficial Overburden Layer	31,35,36,30	41.55
Region 7	Matl. 4 - Deeper Marine Deposits	38,37,39,40	19,050
Region 8	Matl. 3 - Shallow Alluvial Deposits	42,34,38,43	2,506
Region 9	Matl. 4 - Deeper Marine Deposits	43,38,40,44	8,950

Region 10	Matl. 2 - Surficial Overburden Layer	35,45,46,36	2,250
Region 11	Matl. 3 - Shallow Alluvial Deposits	36,46,47,37	42,000
Region 12	Matl. 4 - Deeper Marine Deposits	37,47,48,39	1.5e+005
Region 13	Matl. 8 - Filter Sand	20,23,22,16,52,17,50,18,19	1.5978
Region 14	Matl. 5 - Soil Cement Armoring	23,24,33,22	1.6
Region 15	Matl. 2 - Surficial Overburden Layer	53,41,42,54	2,280
Region 16	Matl. 3 - Shallow Alluvial Deposits	42,43,55,54	42,560
Region 17	Matl. 4 - Deeper Marine Deposits	55,43,44,56	1.52e+005
Region 18	Matl. 3 - Shallow Alluvial Deposits	34,38,37,36,30,29,28,27,26,58,57,70,74,78	5,330
Region 19	Matl. 2 - Surficial Overburden Layer	59,58,26,21,12,5	176.7
Region 20	Matl. 8 - Filter Sand	60,59,5,63,64	44
Region 21	Matl. 6 - Fine Drainage Gravel	61,60,64,65	43
Region 22	Matl. 8 - Filter Sand	62,61,65,64,63,4,3,2	75
Region 23	Matl. 6 - Fine Drainage Gravel	67,66,60,61	1
Region 24	Matl. 9 Concrete Outfall Works	1,62,61,67	1
Region 25	Matl. 9 Concrete Outfall Works	68,72,57,58,59,60,66,69	16
Region 26	Matl. 6 - Fine Drainage Gravel	73,71,72,68	3.75
Region 27	Matl. 6 - Fine Drainage Gravel	76,75,71,73	11.25
Region 28	Matl. 8 - Filter Sand	71,72,57,70	3.75

Region 29	Matl. 8 - Filter Sand	71,70,74,75	11.25
Region 30	Matl. 2 - Surficial Overburden Layer	77,34,78,79,80	6.075
Region 31	Matl. 8 - Filter Sand	79,78,74,75	0.3
Region 32	Matl. 6 - Fine Drainage Gravel	80,82,83,90,81,87	9.2
Region 33	Matl. 8 - Filter Sand	80,77,89,84,82	9.6
Region 34	Matl. 1 - Embankment Material	77,85,88,86,84,89	104
Region 35	Matl. 2 - Surficial Overburden Layer	41,42,34,77,85	134.25
Region 36	Matl. 6 - Fine Drainage Gravel	87,81,76,75,79	0.3
Region 37	Matl. 6 - Fine Drainage Gravel	80,87,79	0.825

Current Slip Surface

Slip Surface: 34,477
F of S: 1.904
Volume: 137.19413 ft³
Weight: 16,246.016 lbs
Resisting Moment: 1,679,678.4 lbs-ft
Activating Moment: 882,086.87 lbs-ft
Resisting Force: 9,390.291 lbs
Activating Force: 4,931.2646 lbs
F of S Rank: 1
Exit: (65.467323, 15.010892) ft
Entry: (4.5586137, 34.5) ft
Radius: 29.550019 ft
Center: (84.208292, 183.97792) ft

Slip Slices

	X (ft)	Y (ft)	PWP (psf)	Base Normal Stress (psf)	Frictional Strength (psf)	Cohesive Strength (psf)
Slice 1	5.0645204	33.95	-1,494.48	162.5147	113.79402	0

Slice 2	5.7852135	33.166493	-1,445.5892	224.03756	139.9942	0
Slice 3	6.02115	32.909993	-1,429.5836	118.73354	74.192951	0
Slice 4	6.42115	32.734924	-1,418.6592	183.2611	114.51424	0
Slice 5	6.9	32.542706	-1,406.6648	203.21835	126.98492	0
Slice 6	8.1166667	32.054317	-1,376.1894	215.27951	134.52157	0
Slice 7	10.35	31.157822	-1,320.2481	231.06634	144.38628	0
Slice 8	12.590033	30.258637	-1,264.139	246.90054	154.28058	0
Slice 9	13.8567	29.751599	-1,232.4998	254.88432	159.2694	0
Slice 10	14.81265	29.377348	-1,209.1465	258.60729	161.59577	0
Slice 11	16.43795	28.741049	-1,169.4415	268.46789	167.75736	0
Slice 12	18.092525	28.120925	-1,130.7457	280.88935	175.51915	0
Slice 13	19.776375	27.516975	-1,093.0592	285.41906	178.34963	0
Slice 14	21.565517	26.876883	-1,053.1175	290.34908	181.43024	0
Slice 15	23.45995	26.20065	-1,010.9206	295.10451	184.40177	0
Slice 16	25.354383	25.524417	-968.7236	299.85994	187.37329	0
Slice 17	27.080975	24.90685	-930.18744	304.04343	189.98742	0
Slice 18	28.639725	24.34795	-895.31208	308.21773	192.59581	0
Slice 19	29.45955	24.05561	-877.07007	317.6215	198.47194	0
Slice 20	30.513833	23.71965	-856.10617	315.92957	197.41471	0

Slice 21	32.5415	23.07351	-815.78703	312.67554	195.38136	0
Slice 22	34.569167	22.42737	-775.46789	309.42151	193.34802	0
Slice 23	36.72285	21.74595	-732.94728	306.2151	191.34443	0
Slice 24	38.772025	21.113037	-693.45352	302.97821	189.3218	0
Slice 25	40.590675	20.563911	-659.18807	296.68385	185.38864	0
Slice 26	41.9452	20.154924	-633.66728	291.99582	182.45924	0
Slice 27	43.263117	19.774067	-609.90176	288.96055	180.56259	0
Slice 28	45.00855	19.2812	-579.14688	279.04444	174.36632	0
Slice 29	46.753983	18.788333	-548.392	269.12833	168.17004	0
Slice 30	49.1143	18.13695	-507.74568	255.6187	159.72829	0
Slice 31	51.088639	17.620093	-475.4938	246.16402	153.82035	0
Slice 32	52.367389	17.326093	-457.1482	231.61364	150.41166	0
Slice 33	54.52895	16.8553	-427.77072	206.56286	134.14349	0
Slice 34	56.077423	16.530531	-407.50514	186.2742	120.96788	0
Slice 35	57.028173	16.338871	-395.54557	172.1816	111.81604	0
Slice 36	58.251953	16.092172	-380.15153	154.04703	100.03931	0
Slice 37	59.001953	15.940981	-370.71721	142.93844	92.825308	0
Slice 38	59.6961	15.801049	-361.98546	132.65711	86.148533	0
Slice 39	60.128816	15.716361	-356.70094	131.9605	85.696151	0

Slice 40	60.582716	15.65638	-352.95809	121.42703	85.024124	0
Slice 41	61.75	15.502126	-343.33268	92.409381	64.705745	0
Slice 42	63.983661	15.206954	-324.91394	36.88252	25.825418	0

Slope Stability DS Slope G&R (EOC)

Report generated using GeoStudio 2012. Copyright © 1991-2013 GEO-SLOPE International Ltd.

File Information

Title: LOWP PIR Analysis Section H
Created By: Viessman, Michael W CIV USARMY CESAJ (US)
Last Edited By: Viessman, Michael W CIV USARMY CESAJ (US)
Revision Number: 540
File Version: 8.2
Tool Version: 8.12.3.7901
Date: 8/26/2018
Time: 9:04:02 PM
File Name: Section H EOC USP-DSP w toe drain.gsz
Directory: C:\Users\k3engmwv\Documents\LOWP\FY17-18 PIR Work\SEEP and SLOPEW Files\
Last Solved Date: 8/26/2018
Last Solved Time: 8:04:44 PM

Project Settings

Length(L) Units: feet
Time(t) Units: Seconds
Force(F) Units: lbf
Pressure(p) Units: psf
Strength Units: psf
Unit Weight of Water: 62.4 pcf
View: 2D
Element Thickness: 1

Analysis Settings

Slope Stability DS Slope G&R (EOC)

Description: No U/S pool, No D/S pool
Kind: SLOPE/W
Parent: Steady-State Seepage (EOC)
Method: Spencer
Settings
    Lambda
        Lambda 1: -1
        Lambda 2: -0.8
        Lambda 3: -0.6
        Lambda 4: -0.4
        Lambda 5: -0.2
        Lambda 6: 0

Lambda 7: 0.2
Lambda 8: 0.4
Lambda 9: 0.6
Lambda 10: 0.8
Lambda 11: 1
PWP Conditions Source: Parent Analysis
Slip Surface
Direction of movement: Right to Left
Use Passive Mode: No
Slip Surface Option: Grid and Radius
Critical slip surfaces saved: 1
Optimize Critical Slip Surface Location: Yes
Tension Crack
Tension Crack Option: (none)
F of S Distribution
F of S Calculation Option: Constant
Advanced
Number of Slices: 30
F of S Tolerance: 0.001
Minimum Slip Surface Depth: 1 ft
Optimization Maximum Iterations: 2,000
Optimization Convergence Tolerance: 1e-007
Starting Optimization Points: 8
Ending Optimization Points: 16
Complete Passes per Insertion: 1
Driving Side Maximum Convex Angle: 5 °
Resisting Side Maximum Convex Angle: 1 °

Materials

Matl. 1 - Embankment Material

Model: Mohr-Coulomb
Unit Weight: 125 pcf
Cohesion': 0 psf
Phi': 32 °
Phi-B: 0 °
Constant Unit Wt. Above Water Table: 120 pcf

Matl. 2 - Surficial Overburden Layer

Model: Mohr-Coulomb
Unit Weight: 109 pcf
Cohesion': 0 psf
Phi': 29 °
Phi-B: 0 °
Constant Unit Wt. Above Water Table: 106 pcf

Matl. 3 - Shallow Alluvial Deposits

Model: Mohr-Coulomb
Unit Weight: 123 pcf
Cohesion': 0 psf
Phi': 30 °
Phi-B: 0 °

Matl. 4 - Deeper Marine Deposits

Model: Mohr-Coulomb
Unit Weight: 125 pcf
Cohesion': 0 psf
Phi': 33 °
Phi-B: 0 °

Matl. 5 - Soil Cement Armoring

Model: Mohr-Coulomb
Unit Weight: 125 pcf
Cohesion': 0 psf
Phi': 35 °
Phi-B: 0 °
Constant Unit Wt. Above Water Table: 120 pcf

Matl. 6 - Fine Drainage Gravel

Model: Mohr-Coulomb
Unit Weight: 130 pcf
Cohesion': 0 psf
Phi': 35 °
Phi-B: 0 °
Constant Unit Wt. Above Water Table: 115 pcf

Matl. 8 - Filter Sand

Model: Mohr-Coulomb
Unit Weight: 120 pcf
Cohesion': 0 psf
Phi': 33 °
Phi-B: 0 °
Constant Unit Wt. Above Water Table: 115 pcf

Matl. 9 Concrete Outfall Works

Model: Bedrock (Impenetrable)

Slip Surface Grid

Upper Left: (-102.8639, 115.7947) ft
Lower Left: (-102.8639, 37.7108) ft
Lower Right: (4.0033, 37.7108) ft
Grid Horizontal Increment: 25

Grid Vertical Increment: 25
Left Projection Angle: 0 °
Right Projection Angle: 0 °

Slip Surface Radius

Upper Left Coordinate: (-137.2029, 14.9347) ft
Upper Right Coordinate: (-6.3618, 15.1036) ft
Lower Left Coordinate: (-137.08, -24.5305) ft
Lower Right Coordinate: (-7.3134, -24.7416) ft
Number of Increments: 50
Left Projection: No
Left Projection Angle: 135 °
Right Projection: No
Right Projection Angle: 45 °

Slip Surface Limits

Left Coordinate: (-1,700, 15) ft
Right Coordinate: (1,600, 15) ft

Surcharge Loads

Surcharge Load 1

Surcharge (Unit Weight): 200 pcf
Direction: Vertical

Coordinates

	X (ft)	Y (ft)
	-6	35.5
	6	35.5

Points

	X (ft)	Y (ft)
Point 1	-56.5	18
Point 2	-14.5	18
Point 3	-14.5	28
Point 4	-11.5	28
Point 5	-11.5	15
Point 6	-7	34.5

Point 7	-7	33.4
Point 8	6.8	33.4
Point 9	14	31
Point 10	13.7	30.1
Point 11	51.6	17.5
Point 12	54.2	15
Point 13	55.0033	16.4828
Point 14	54.9	16.4
Point 15	54.8636	16.2065
Point 16	55.097	16.0075
Point 17	55.3031	16.0832
Point 18	55.3561	16.2916
Point 19	55.3	16.4
Point 20	55.1797	16.4906
Point 21	62.3	15
Point 22	59.3	16
Point 23	57.8	16.5
Point 24	61	16.5
Point 25	7	34.5
Point 26	62.3	13.5
Point 27	70.3	13.5
Point 28	70.3	11.5
Point 29	72.3	11.5
Point 30	72.3	13.5
Point 31	72.3	15
Point 32	65.5	15
Point 33	62.5	16
Point 34	-90.5	13.5
Point 35	100	15
Point 36	100	13.5
Point 37	100	-14.5
Point 38	-90.5	-14.5
Point 39	100	-114.5
Point 40	-90.5	-114.5
Point 41	-180	15
Point 42	-180	13.5

Point 43	-180	-14.5
Point 44	-180	-114.5
Point 45	1,600	15
Point 46	1,600	13.5
Point 47	1,600	-14.5
Point 48	1,600	-114.5
Point 49	41.5	23
Point 50	55.3546	16.1839
Point 51	54.9487	16.066
Point 52	55.2227	16.0254
Point 53	-1,700	15
Point 54	-1,700	13.5
Point 55	-1,700	-14.5
Point 56	-1,700	-114.5
Point 57	-65.5	13.5
Point 58	-55.5	13.5
Point 59	-55.5	15
Point 60	-55.5	16
Point 61	-55.5	17
Point 62	-55.5	18
Point 63	-11.5	16
Point 64	-12.5	16
Point 65	-12.5	17
Point 66	-56.5	16
Point 67	-56.5	17
Point 68	-65.5	15
Point 69	-56.5	15
Point 70	-70.5	13.5
Point 71	-70.5	14.25
Point 72	-65.5	14.25
Point 73	-70.5	15
Point 74	-85.5	13.5
Point 75	-85.5	14.25
Point 76	-85.5	15
Point 77	-90.5	15
Point 78	-85.9	13.5

Point 79	-85.9	14.25
Point 80	-88.1	15
Point 81	-85.8	15
Point 82	-100.1	19
Point 83	-97.8	19
Point 84	-102.5	19
Point 85	-128.5	15
Point 86	-116.5	19
Point 87	-85.9	15
Point 88	-119.5	18
Point 89	-99.5	18
Point 90	-94.8	18
Point 91	29.5	27

Regions

	Material	Points	Area (ft²)
Region 1	Matl. 1 - Embankment Material	1,6,7,8,9,10,11,12,5,63,4,3,2,62	1,101.7
Region 2		13,14,15,51,16,52,17,50,18,19,20	0.18474
Region 3	Matl. 8 - Filter Sand	9,10,11,12,21,22,16,51,15,14,13,20,23	52.737
Region 4	Matl. 5 - Soil Cement Armoring	6,7,8,9,23,24,49,91,25	74.19
Region 5	Matl. 5 - Soil Cement Armoring	22,21,26,27,28,29,30,31,32,33	22.2
Region 6	Matl. 2 - Surficial Overburden Layer	31,35,36,30	41.55
Region 7	Matl. 4 - Deeper Marine Deposits	38,37,39,40	19,050
Region 8	Matl. 3 - Shallow Alluvial Deposits	42,34,38,43	2,506
Region 9	Matl. 4 - Deeper Marine Deposits	43,38,40,44	8,950

Region 10	Matl. 2 - Surficial Overburden Layer	35,45,46,36	2,250
Region 11	Matl. 3 - Shallow Alluvial Deposits	36,46,47,37	42,000
Region 12	Matl. 4 - Deeper Marine Deposits	37,47,48,39	1.5e+005
Region 13	Matl. 8 - Filter Sand	20,23,22,16,52,17,50,18,19	1.5978
Region 14	Matl. 5 - Soil Cement Armoring	23,24,33,22	1.6
Region 15	Matl. 2 - Surficial Overburden Layer	53,41,42,54	2,280
Region 16	Matl. 3 - Shallow Alluvial Deposits	42,43,55,54	42,560
Region 17	Matl. 4 - Deeper Marine Deposits	55,43,44,56	1.52e+005
Region 18	Matl. 3 - Shallow Alluvial Deposits	34,38,37,36,30,29,28,27,26,58,57,70,74,78	5,330
Region 19	Matl. 2 - Surficial Overburden Layer	59,58,26,21,12,5	176.7
Region 20	Matl. 8 - Filter Sand	60,59,5,63,64	44
Region 21	Matl. 6 - Fine Drainage Gravel	61,60,64,65	43
Region 22	Matl. 8 - Filter Sand	62,61,65,64,63,4,3,2	75
Region 23	Matl. 6 - Fine Drainage Gravel	67,66,60,61	1
Region 24	Matl. 9 Concrete Outfall Works	1,62,61,67	1
Region 25	Matl. 9 Concrete Outfall Works	68,72,57,58,59,60,66,69	16
Region 26	Matl. 6 - Fine Drainage Gravel	73,71,72,68	3.75
Region 27	Matl. 6 - Fine Drainage Gravel	76,75,71,73	11.25
Region 28	Matl. 8 - Filter Sand	71,72,57,70	3.75

Region 29	Matl. 8 - Filter Sand	71,70,74,75	11.25
Region 30	Matl. 2 - Surficial Overburden Layer	77,34,78,79,80	6.075
Region 31	Matl. 8 - Filter Sand	79,78,74,75	0.3
Region 32	Matl. 6 - Fine Drainage Gravel	80,82,83,90,81,87	9.2
Region 33	Matl. 8 - Filter Sand	80,77,89,84,82	9.6
Region 34	Matl. 1 - Embankment Material	77,85,88,86,84,89	104
Region 35	Matl. 2 - Surficial Overburden Layer	41,42,34,77,85	134.25
Region 36	Matl. 6 - Fine Drainage Gravel	87,81,76,75,79	0.3
Region 37	Matl. 6 - Fine Drainage Gravel	80,87,79	0.825

Current Slip Surface

Slip Surface: 34,477
F of S: 2.238
Volume: 420.6768 ft^3
Weight: 50,001.676 lbs
Resisting Moment: 1,219,749.4 lbs-ft
Activating Moment: 539,182.09 lbs-ft
Resisting Force: 29,199.6 lbs
Activating Force: 12,630.483 lbs
F of S Rank: 1
Exit: (-55.855847, 18.214718) ft
Entry: (0.12801865, 34.5) ft
Radius: 28.369758 ft
Center: (-38.74358, 53.32758) ft

Slip Slices

	X (ft)	Y (ft)	PWP (psf)	Base Normal Stress (psf)	Frictional Strength (psf)	Cohesive Strength (psf)
Slice 1	-55.635594	18.107359	-505.89919	35.263872	22.035313	0

Slice 2	-54.389565	17.5	-468	234.01301	151.96983	0
Slice 3	-52.922294	16.7848	-423.37152	480.69866	336.58883	0
Slice 4	-51.896555	16.2848	-392.17152	648.16594	453.85068	0
Slice 5	-50.286599	15.5	-343.2	883.91806	574.0231	0
Slice 6	-49.183344	14.9622	-309.64128	1,002.2334	555.54705	0
Slice 7	-47.7879	14.83815	-301.90056	805.05745	446.25063	0
Slice 8	-45.5693	14.6951	-292.97424	921.33696	510.70542	0
Slice 9	-43.7679	14.5815	-285.8856	1,016.46	563.43298	0
Slice 10	-41.9665	14.4679	-278.79696	1,111.583	616.16054	0
Slice 11	-39.8527	14.3264	-269.96736	1,229.6021	681.57958	0
Slice 12	-37.803878	14.368083	-272.5684	1,151.0327	638.02784	0
Slice 13	-36.132434	14.62085	-288.34104	1,190.7934	660.06754	0
Slice 14	-34.432556	14.877917	-304.382	1,231.192	682.46088	0
Slice 15	-32.365749	15.5043	-343.46832	1,077.8379	699.95615	0
Slice 16	-30.145199	16.41955	-400.57992	1,061.9106	743.55778	0
Slice 17	-28.936125	16.91955	-431.77992	1,049.0559	734.55684	0
Slice 18	-28.262675	17.20295	-449.46408	1,046.1437	679.37365	0
Slice 19	-27.0465	17.70295	-480.66408	1,047.4919	680.24921	0
Slice 20	-25.324183	18.400067	-524.16416	1,036.7948	647.86127	0

Slice 21	-23.34735	19.2002	-574.09248	1,022.1445	638.70674	0
Slice 22	-21.370517	20.000333	-624.0208	1,007.4941	629.55222	0
Slice 23	-19.589633	20.763467	-671.64032	962.83943	601.64885	0
Slice 24	-18.0047	21.4896	-716.95104	942.87389	589.173	0
Slice 25	-16.419767	22.215733	-762.26176	922.90835	576.69714	0
Slice 26	-15.06365	22.91238	-805.73249	840.65273	525.29813	0
Slice 27	-13.774425	23.675369	-853.34305	790.35149	513.26026	0
Slice 28	-12.323275	24.53419	-906.93344	758.37293	492.49314	0
Slice 29	-10.42385	25.708254	-980.19506	708.19634	442.53019	0
Slice 30	-8.125	27.166574	-1,071.1942	644.13519	402.50034	0
Slice 31	-6.6165	28.123519	-1,130.9076	590.265	368.83851	0
Slice 32	-6.1165	28.464311	-1,152.173	510.12001	318.75836	0
Slice 33	-5.8165	28.715411	-1,167.8416	629.75985	393.51763	0
Slice 34	-4.8407	29.635725	-1,225.2692	522.65042	326.58823	0
Slice 35	-3.2561	31.169175	-1,320.9565	399.93331	249.90607	0
Slice 36	-1.7238363	32.66795	-1,414.4801	277.55674	173.4367	0
Slice 37	-0.42792701	33.95	-1,494.48	173.30609	121.35023	0

Slope Stability DS Slope G&R (NP LT SSS)

Report generated using GeoStudio 2012. Copyright © 1991-2013 GEO-SLOPE International Ltd.

File Information

Title: LOWP PIR Analysis Section H
Created By: Viessman, Michael W CIV USARMY CESAJ (US)
Last Edited By: Viessman, Michael W CIV USARMY CESAJ (US)
Revision Number: 553
File Version: 8.2
Tool Version: 8.12.3.7901
Date: 8/26/2018
Time: 9:34:28 PM
File Name: Section H EOC USP-DSP w toe drain.gsz
Directory: C:\Users\k3engmwv\Documents\LOWP\FY17-18 PIR Work\SEEP and SLOPEW Files\
Last Solved Date: 8/26/2018
Last Solved Time: 8:35:26 PM

Project Settings

Length(L) Units: feet
Time(t) Units: Seconds
Force(F) Units: lbf
Pressure(p) Units: psf
Strength Units: psf
Unit Weight of Water: 62.4 pcf
View: 2D
Element Thickness: 1

Analysis Settings

Slope Stability DS Slope G&R (NP LT SSS)

Description: NP LT SSS
Kind: SLOPE/W
Parent: Steady-State Seepage NP (LT SSS)
Method: Spencer
Settings
- Lambda
  - Lambda 1: -1
  - Lambda 2: -0.8
  - Lambda 3: -0.6
  - Lambda 4: -0.4
  - Lambda 5: -0.2
  - Lambda 6: 0

Lambda 7: 0.2
Lambda 8: 0.4
Lambda 9: 0.6
Lambda 10: 0.8
Lambda 11: 1
PWP Conditions Source: Parent Analysis
Slip Surface
Direction of movement: Right to Left
Use Passive Mode: No
Slip Surface Option: Grid and Radius
Critical slip surfaces saved: 1
Optimize Critical Slip Surface Location: Yes
Tension Crack
Tension Crack Option: (none)
F of S Distribution
F of S Calculation Option: Constant
Advanced
Number of Slices: 30
F of S Tolerance: 0.001
Minimum Slip Surface Depth: 1 ft
Optimization Maximum Iterations: 2,000
Optimization Convergence Tolerance: 1e-007
Starting Optimization Points: 8
Ending Optimization Points: 16
Complete Passes per Insertion: 1
Driving Side Maximum Convex Angle: 5 °
Resisting Side Maximum Convex Angle: 1 °

Materials

Matl. 1 - Embankment Material

Model: Mohr-Coulomb
Unit Weight: 125 pcf
Cohesion': 0 psf
Phi': 32 °
Phi-B: 0 °
Constant Unit Wt. Above Water Table: 120 pcf

Matl. 2 - Surficial Overburden Layer

Model: Mohr-Coulomb
Unit Weight: 109 pcf
Cohesion': 0 psf
Phi': 29 °
Phi-B: 0 °
Constant Unit Wt. Above Water Table: 106 pcf

Matl. 3 - Shallow Alluvial Deposits

Model: Mohr-Coulomb
Unit Weight: 123 pcf
Cohesion': 0 psf
Phi': 30 °
Phi-B: 0 °

Matl. 4 - Deeper Marine Deposits

Model: Mohr-Coulomb
Unit Weight: 125 pcf
Cohesion': 0 psf
Phi': 33 °
Phi-B: 0 °

Matl. 5 - Soil Cement Armoring

Model: Mohr-Coulomb
Unit Weight: 125 pcf
Cohesion': 0 psf
Phi': 35 °
Phi-B: 0 °
Constant Unit Wt. Above Water Table: 120 pcf

Matl. 6 - Fine Drainage Gravel

Model: Mohr-Coulomb
Unit Weight: 130 pcf
Cohesion': 0 psf
Phi': 35 °
Phi-B: 0 °
Constant Unit Wt. Above Water Table: 115 pcf

Matl. 8 - Filter Sand

Model: Mohr-Coulomb
Unit Weight: 120 pcf
Cohesion': 0 psf
Phi': 33 °
Phi-B: 0 °
Constant Unit Wt. Above Water Table: 115 pcf

Matl. 9 Concrete Outfall Works

Model: Bedrock (Impenetrable)

Slip Surface Grid

Upper Left: (-102.8639, 115.7947) ft
Lower Left: (-102.8639, 37.7108) ft
Lower Right: (4.0033, 37.7108) ft
Grid Horizontal Increment: 25

Grid Vertical Increment: 25
Left Projection Angle: 0 °
Right Projection Angle: 0 °

Slip Surface Radius

Upper Left Coordinate: (-137.2029, 14.9347) ft
Upper Right Coordinate: (-6.3618, 15.1036) ft
Lower Left Coordinate: (-137.08, -24.5305) ft
Lower Right Coordinate: (-7.3134, -24.7416) ft
Number of Increments: 50
Left Projection: No
Left Projection Angle: 135 °
Right Projection: No
Right Projection Angle: 45 °

Slip Surface Limits

Left Coordinate: (-1,700, 15) ft
Right Coordinate: (1,600, 15) ft

Surcharge Loads

Surcharge Load 1

Surcharge (Unit Weight): 200 pcf
Direction: Vertical

Coordinates

	X (ft)	Y (ft)
	-6	35.5
	6	35.5

Points

	X (ft)	Y (ft)
Point 1	-56.5	18
Point 2	-14.5	18
Point 3	-14.5	28
Point 4	-11.5	28
Point 5	-11.5	15
Point 6	-7	34.5

Point 7	-7	33.4
Point 8	6.8	33.4
Point 9	14	31
Point 10	13.7	30.1
Point 11	51.6	17.5
Point 12	54.2	15
Point 13	55.0033	16.4828
Point 14	54.9	16.4
Point 15	54.8636	16.2065
Point 16	55.097	16.0075
Point 17	55.3031	16.0832
Point 18	55.3561	16.2916
Point 19	55.3	16.4
Point 20	55.1797	16.4906
Point 21	62.3	15
Point 22	59.3	16
Point 23	57.8	16.5
Point 24	61	16.5
Point 25	7	34.5
Point 26	62.3	13.5
Point 27	70.3	13.5
Point 28	70.3	11.5
Point 29	72.3	11.5
Point 30	72.3	13.5
Point 31	72.3	15
Point 32	65.5	15
Point 33	62.5	16
Point 34	-90.5	13.5
Point 35	100	15
Point 36	100	13.5
Point 37	100	-14.5
Point 38	-90.5	-14.5
Point 39	100	-114.5
Point 40	-90.5	-114.5
Point 41	-180	15
Point 42	-180	13.5

Point 43	-180	-14.5
Point 44	-180	-114.5
Point 45	1,600	15
Point 46	1,600	13.5
Point 47	1,600	-14.5
Point 48	1,600	-114.5
Point 49	41.5	23
Point 50	55.3546	16.1839
Point 51	54.9487	16.066
Point 52	55.2227	16.0254
Point 53	-1,700	15
Point 54	-1,700	13.5
Point 55	-1,700	-14.5
Point 56	-1,700	-114.5
Point 57	-65.5	13.5
Point 58	-55.5	13.5
Point 59	-55.5	15
Point 60	-55.5	16
Point 61	-55.5	17
Point 62	-55.5	18
Point 63	-11.5	16
Point 64	-12.5	16
Point 65	-12.5	17
Point 66	-56.5	16
Point 67	-56.5	17
Point 68	-65.5	15
Point 69	-56.5	15
Point 70	-70.5	13.5
Point 71	-70.5	14.25
Point 72	-65.5	14.25
Point 73	-70.5	15
Point 74	-85.5	13.5
Point 75	-85.5	14.25
Point 76	-85.5	15
Point 77	-90.5	15
Point 78	-85.9	13.5

Point 79	-85.9	14.25
Point 80	-88.1	15
Point 81	-85.8	15
Point 82	-100.1	19
Point 83	-97.8	19
Point 84	-102.5	19
Point 85	-128.5	15
Point 86	-116.5	19
Point 87	-85.9	15
Point 88	-119.5	18
Point 89	-99.5	18
Point 90	-94.8	18
Point 91	29.5	27

Regions

	Material	Points	Area (ft²)
Region 1	Matl. 1 - Embankment Material	1,6,7,8,9,10,11,12,5,63,4,3,2,62	1,101.7
Region 2		13,14,15,51,16,52,17,50,18,19,20	0.18474
Region 3	Matl. 8 - Filter Sand	9,10,11,12,21,22,16,51,15,14,13,20,23	52.737
Region 4	Matl. 5 - Soil Cement Armoring	6,7,8,9,23,24,49,91,25	74.19
Region 5	Matl. 5 - Soil Cement Armoring	22,21,26,27,28,29,30,31,32,33	22.2
Region 6	Matl. 2 - Surficial Overburden Layer	31,35,36,30	41.55
Region 7	Matl. 4 - Deeper Marine Deposits	38,37,39,40	19,050
Region 8	Matl. 3 - Shallow Alluvial Deposits	42,34,38,43	2,506
Region 9	Matl. 4 - Deeper Marine Deposits	43,38,40,44	8,950

Region 10	Matl. 2 - Surficial Overburden Layer	35,45,46,36	2,250
Region 11	Matl. 3 - Shallow Alluvial Deposits	36,46,47,37	42,000
Region 12	Matl. 4 - Deeper Marine Deposits	37,47,48,39	1.5e+005
Region 13	Matl. 8 - Filter Sand	20,23,22,16,52,17,50,18,19	1.5978
Region 14	Matl. 5 - Soil Cement Armoring	23,24,33,22	1.6
Region 15	Matl. 2 - Surficial Overburden Layer	53,41,42,54	2,280
Region 16	Matl. 3 - Shallow Alluvial Deposits	42,43,55,54	42,560
Region 17	Matl. 4 - Deeper Marine Deposits	55,43,44,56	1.52e+005
Region 18	Matl. 3 - Shallow Alluvial Deposits	34,38,37,36,30,29,28,27,26,58,57,70,74,78	5,330
Region 19	Matl. 2 - Surficial Overburden Layer	59,58,26,21,12,5	176.7
Region 20	Matl. 8 - Filter Sand	60,59,5,63,64	44
Region 21	Matl. 6 - Fine Drainage Gravel	61,60,64,65	43
Region 22	Matl. 8 - Filter Sand	62,61,65,64,63,4,3,2	75
Region 23	Matl. 6 - Fine Drainage Gravel	67,66,60,61	1
Region 24	Matl. 9 Concrete Outfall Works	1,62,61,67	1
Region 25	Matl. 9 Concrete Outfall Works	68,72,57,58,59,60,66,69	16
Region 26	Matl. 6 - Fine Drainage Gravel	73,71,72,68	3.75
Region 27	Matl. 6 - Fine Drainage Gravel	76,75,71,73	11.25
Region 28	Matl. 8 - Filter Sand	71,72,57,70	3.75

Region 29	Matl. 8 - Filter Sand	71,70,74,75	11.25
Region 30	Matl. 2 - Surficial Overburden Layer	77,34,78,79,80	6.075
Region 31	Matl. 8 - Filter Sand	79,78,74,75	0.3
Region 32	Matl. 6 - Fine Drainage Gravel	80,82,83,90,81,87	9.2
Region 33	Matl. 8 - Filter Sand	80,77,89,84,82	9.6
Region 34	Matl. 1 - Embankment Material	77,85,88,86,84,89	104
Region 35	Matl. 2 - Surficial Overburden Layer	41,42,34,77,85	134.25
Region 36	Matl. 6 - Fine Drainage Gravel	87,81,76,75,79	0.3
Region 37	Matl. 6 - Fine Drainage Gravel	80,87,79	0.825

Current Slip Surface

Slip Surface: 34,477
F of S: 2.132
Volume: 419.90948 ft³
Weight: 50,171.778 lbs
Resisting Moment: 1,133,900.2 lbs-ft
Activating Moment: 523,338.44 lbs-ft
Resisting Force: 26,653.539 lbs
Activating Force: 11,852.221 lbs
F of S Rank: 1
Exit: (-55.867168, 18.210944) ft
Entry: (-3.1178281, 34.5) ft
Radius: 27.988953 ft
Center: (-38.74358, 53.32758) ft

Slip Slices

	X (ft)	Y (ft)	PWP (psf)	Base Normal Stress (psf)	Frictional Strength (psf)	Cohesive Strength (psf)
Slice 1	-55.655108	18.105472	-89.64236	36.219423	22.632407	0

Slice 2	-54.437761	17.5	-72.269806	243.78091	158.31318	0
Slice 3	-52.969336	16.76965	-27.078234	509.57715	356.80976	0
Slice 4	-51.962436	16.26965	6.3777812	683.15346	473.88343	0
Slice 5	-50.410394	15.5	58.598748	913.13477	554.94218	0
Slice 6	-49.279308	14.9391	97.305663	1,031.7968	517.99691	0
Slice 7	-47.9945	14.60765	125.27849	938.19734	450.60827	0
Slice 8	-45.877575	14.211225	160.33653	1,021.3916	477.29064	0
Slice 9	-43.967725	13.959475	184.1097	1,142.6757	531.3418	0
Slice 10	-42.0292	13.83065	198.45334	1,150.0917	527.50173	0
Slice 11	-40.062	13.82475	203.01408	1,236.7464	573.00716	0
Slice 12	-37.991725	13.94455	197.3902	1,230.3004	572.55146	0
Slice 13	-35.818375	14.19005	181.17693	1,292.5728	616.05679	0
Slice 14	-33.855875	14.483525	159.86111	1,279.4438	620.59481	0
Slice 15	-32.104225	14.824975	133.43143	1,312.2473	653.42832	0
Slice 16	-30.40425	15.35445	98.00184	1,156.6633	687.50284	0
Slice 17	-29.294963	15.8566	67.40674	1,102.3064	672.0717	0
Slice 18	-28.015622	16.5	28.333974	1,072.2484	730.95671	0
Slice 19	-26.027216	17.5	-32.327126	1,040.3325	675.5998	0
Slice 20	-24.030857	18.504	-93.542902	1,010.7612	631.59368	0

Slice 21	-22.105325	19.496975	-154.20588	962.86498	601.66481	0
Slice 22	-20.258575	20.474925	-214.19224	927.86166	579.79231	0
Slice 23	-18.6309	21.372	-269.52021	871.04782	544.29109	0
Slice 24	-17.2223	22.1882	-320.13883	838.40679	523.89471	0
Slice 25	-15.509	23.186874	-382.29239	795.78426	497.26119	0
Slice 26	-13.8091	24.181836	-427.61198	739.04202	479.9395	0
Slice 27	-12.4273	24.990612	-447.05595	709.58318	460.80871	0
Slice 28	-11.6182	25.47353	-460.10564	664.54452	431.56026	0
Slice 29	-10.75	26.050351	-492.23022	649.93193	406.12255	0
Slice 30	-9.25	27.04693	-551.46393	605.10437	378.11118	0
Slice 31	-7.75	28.043509	-609.66722	560.27681	350.09981	0
Slice 32	-6.63485	28.784399	-652.04358	515.96281	322.40935	0
Slice 33	-6.13485	29.174086	-674.44891	398.18762	248.81524	0
Slice 34	-5.37775	29.999886	-722.87827	461.05434	288.09873	0
Slice 35	-4.1723681	32.0393	-844.96414	205.10543	128.1641	0
Slice 36	-3.3535322	33.95	-961.03146	107.09789	74.990751	0

Slope Stability DS Slope G&R (MSP LT SSS)

Report generated using GeoStudio 2012. Copyright © 1991-2013 GEO-SLOPE International Ltd.

File Information

Title: LOWP PIR Analysis Section H
Created By: Viessman, Michael W CIV USARMY CESAJ (US)
Last Edited By: Viessman, Michael W CIV USARMY CESAJ (US)
Revision Number: 566
File Version: 8.2
Tool Version: 8.12.3.7901
Date: 8/27/2018
Time: 10:56:44 AM
File Name: Section H EOC USP-DSP w toe drain.gsz
Directory: C:\Users\k3engmwv\Documents\LOWP\FY17-18 PIR Work\SEEP and SLOPEW Files\
Last Solved Date: 8/27/2018
Last Solved Time: 9:59:32 AM

Project Settings

Length(L) Units: feet
Time(t) Units: Seconds
Force(F) Units: lbf
Pressure(p) Units: psf
Strength Units: psf
Unit Weight of Water: 62.4 pcf
View: 2D
Element Thickness: 1

Analysis Settings

Slope Stability DS Slope G&R (MSP LT SSS)

Description: MSP LT SSS
Kind: SLOPE/W
Parent: Steady-State Seepage MSP (LT SSS)
Method: Spencer
Settings
- Lambda
  - Lambda 1: -1
  - Lambda 2: -0.8
  - Lambda 3: -0.6

Lambda 4: -0.4
Lambda 5: -0.2
Lambda 6: 0
Lambda 7: 0.2
Lambda 8: 0.4
Lambda 9: 0.6
Lambda 10: 0.8
Lambda 11: 1
PWP Conditions Source: Parent Analysis
Slip Surface
Direction of movement: Right to Left
Use Passive Mode: No
Slip Surface Option: Grid and Radius
Critical slip surfaces saved: 1
Optimize Critical Slip Surface Location: Yes
Tension Crack
Tension Crack Option: (none)
F of S Distribution
F of S Calculation Option: Constant
Advanced
Number of Slices: 30
F of S Tolerance: 0.001
Minimum Slip Surface Depth: 1 ft
Optimization Maximum Iterations: 2,000
Optimization Convergence Tolerance: 1e-007
Starting Optimization Points: 8
Ending Optimization Points: 16
Complete Passes per Insertion: 1
Driving Side Maximum Convex Angle: 5 °
Resisting Side Maximum Convex Angle: 1 °

Materials

Matl. 1 - Embankment Material

Model: Mohr-Coulomb
Unit Weight: 125 pcf
Cohesion': 0 psf
Phi': 32 °
Phi-B: 0 °
Constant Unit Wt. Above Water Table: 120 pcf

Matl. 2 - Surficial Overburden Layer

Model: Mohr-Coulomb
Unit Weight: 109 pcf
Cohesion': 0 psf
Phi': 29 °

Phi-B: 0 °
Constant Unit Wt. Above Water Table: 106 pcf

Matl. 3 - Shallow Alluvial Deposits

Model: Mohr-Coulomb
Unit Weight: 123 pcf
Cohesion': 0 psf
Phi': 30 °
Phi-B: 0 °

Matl. 4 - Deeper Marine Deposits

Model: Mohr-Coulomb
Unit Weight: 125 pcf
Cohesion': 0 psf
Phi': 33 °
Phi-B: 0 °

Matl. 5 - Soil Cement Armoring

Model: Mohr-Coulomb
Unit Weight: 125 pcf
Cohesion': 0 psf
Phi': 35 °
Phi-B: 0 °
Constant Unit Wt. Above Water Table: 120 pcf

Matl. 6 - Fine Drainage Gravel

Model: Mohr-Coulomb
Unit Weight: 130 pcf
Cohesion': 0 psf
Phi': 35 °
Phi-B: 0 °
Constant Unit Wt. Above Water Table: 115 pcf

Matl. 8 - Filter Sand

Model: Mohr-Coulomb
Unit Weight: 120 pcf
Cohesion': 0 psf
Phi': 33 °
Phi-B: 0 °
Constant Unit Wt. Above Water Table: 115 pcf

Matl. 9 Concrete Outfall Works

Model: Bedrock (Impenetrable)

Slip Surface Grid

Upper Left: (-102.8639, 115.7947) ft

Lower Left: (-102.8639, 37.7108) ft
Lower Right: (4.0033, 37.7108) ft
Grid Horizontal Increment: 25
Grid Vertical Increment: 25
Left Projection Angle: 0 °
Right Projection Angle: 0 °

Slip Surface Radius

Upper Left Coordinate: (-137.2029, 14.9347) ft
Upper Right Coordinate: (-6.3618, 15.1036) ft
Lower Left Coordinate: (-137.08, -24.5305) ft
Lower Right Coordinate: (-7.3134, -24.7416) ft
Number of Increments: 50
Left Projection: No
Left Projection Angle: 135 °
Right Projection: No
Right Projection Angle: 45 °

Slip Surface Limits

Left Coordinate: (-1,700, 15) ft
Right Coordinate: (1,600, 15) ft

Surcharge Loads

Surcharge Load 1

Surcharge (Unit Weight): 200 pcf
Direction: Vertical

Coordinates

	X (ft)	Y (ft)
	-6	35.5
	6	35.5

Points

	X (ft)	Y (ft)
Point 1	-56.5	18
Point 2	-14.5	18
Point 3	-14.5	28
Point 4	-11.5	28

Point 5	-11.5	15
Point 6	-7	34.5
Point 7	-7	33.4
Point 8	6.8	33.4
Point 9	14	31
Point 10	13.7	30.1
Point 11	51.6	17.5
Point 12	54.2	15
Point 13	55.0033	16.4828
Point 14	54.9	16.4
Point 15	54.8636	16.2065
Point 16	55.097	16.0075
Point 17	55.3031	16.0832
Point 18	55.3561	16.2916
Point 19	55.3	16.4
Point 20	55.1797	16.4906
Point 21	62.3	15
Point 22	59.3	16
Point 23	57.8	16.5
Point 24	61	16.5
Point 25	7	34.5
Point 26	62.3	13.5
Point 27	70.3	13.5
Point 28	70.3	11.5
Point 29	72.3	11.5
Point 30	72.3	13.5
Point 31	72.3	15
Point 32	65.5	15
Point 33	62.5	16
Point 34	-90.5	13.5
Point 35	100	15
Point 36	100	13.5
Point 37	100	-14.5
Point 38	-90.5	-14.5
Point 39	100	-114.5
Point 40	-90.5	-114.5

Point 41	-180	15
Point 42	-180	13.5
Point 43	-180	-14.5
Point 44	-180	-114.5
Point 45	1,600	15
Point 46	1,600	13.5
Point 47	1,600	-14.5
Point 48	1,600	-114.5
Point 49	41.5	23
Point 50	55.3546	16.1839
Point 51	54.9487	16.066
Point 52	55.2227	16.0254
Point 53	-1,700	15
Point 54	-1,700	13.5
Point 55	-1,700	-14.5
Point 56	-1,700	-114.5
Point 57	-65.5	13.5
Point 58	-55.5	13.5
Point 59	-55.5	15
Point 60	-55.5	16
Point 61	-55.5	17
Point 62	-55.5	18
Point 63	-11.5	16
Point 64	-12.5	16
Point 65	-12.5	17
Point 66	-56.5	16
Point 67	-56.5	17
Point 68	-65.5	15
Point 69	-56.5	15
Point 70	-70.5	13.5
Point 71	-70.5	14.25
Point 72	-65.5	14.25
Point 73	-70.5	15
Point 74	-85.5	13.5
Point 75	-85.5	14.25
Point 76	-85.5	15

Point 77	-90.5	15
Point 78	-85.9	13.5
Point 79	-85.9	14.25
Point 80	-88.1	15
Point 81	-85.8	15
Point 82	-100.1	19
Point 83	-97.8	19
Point 84	-102.5	19
Point 85	-128.5	15
Point 86	-116.5	19
Point 87	-85.9	15
Point 88	-119.5	18
Point 89	-99.5	18
Point 90	-94.8	18
Point 91	29.5	27

Regions

	Material	Points	Area (ft^2)
Region 1	Matl. 1 - Embankment Material	1,6,7,8,9,10,11,12,5,63,4,3,2,62	1,101.7
Region 2		13,14,15,51,16,52,17,50,18,19,20	0.18474
Region 3	Matl. 8 - Filter Sand	9,10,11,12,21,22,16,51,15,14,13,20,23	52.737
Region 4	Matl. 5 - Soil Cement Armoring	6,7,8,9,23,24,49,91,25	74.19
Region 5	Matl. 5 - Soil Cement Armoring	22,21,26,27,28,29,30,31,32,33	22.2
Region 6	Matl. 2 - Surficial Overburden Layer	31,35,36,30	41.55
Region 7	Matl. 4 - Deeper Marine Deposits	38,37,39,40	19,050
Region 8	Matl. 3 - Shallow Alluvial Deposits	42,34,38,43	2,506

Region 9	Matl. 4 - Deeper Marine Deposits	43,38,40,44	8,950
Region 10	Matl. 2 - Surficial Overburden Layer	35,45,46,36	2,250
Region 11	Matl. 3 - Shallow Alluvial Deposits	36,46,47,37	42,000
Region 12	Matl. 4 - Deeper Marine Deposits	37,47,48,39	1.5e+005
Region 13	Matl. 8 - Filter Sand	20,23,22,16,52,17,50,18,19	1.5978
Region 14	Matl. 5 - Soil Cement Armoring	23,24,33,22	1.6
Region 15	Matl. 2 - Surficial Overburden Layer	53,41,42,54	2,280
Region 16	Matl. 3 - Shallow Alluvial Deposits	42,43,55,54	42,560
Region 17	Matl. 4 - Deeper Marine Deposits	55,43,44,56	1.52e+005
Region 18	Matl. 3 - Shallow Alluvial Deposits	34,38,37,36,30,29,28,27,26,58,57,70,74,78	5,330
Region 19	Matl. 2 - Surficial Overburden Layer	59,58,26,21,12,5	176.7
Region 20	Matl. 8 - Filter Sand	60,59,5,63,64	44
Region 21	Matl. 6 - Fine Drainage Gravel	61,60,64,65	43
Region 22	Matl. 8 - Filter Sand	62,61,65,64,63,4,3,2	75
Region 23	Matl. 6 - Fine Drainage Gravel	67,66,60,61	1
Region 24	Matl. 9 Concrete Outfall Works	1,62,61,67	1
Region 25	Matl. 9 Concrete Outfall Works	68,72,57,58,59,60,66,69	16
Region 26	Matl. 6 - Fine Drainage Gravel	73,71,72,68	3.75
Region 27	Matl. 6 - Fine Drainage Gravel	76,75,71,73	11.25

Region 28	Matl. 8 - Filter Sand	71,72,57,70	3.75
Region 29	Matl. 8 - Filter Sand	71,70,74,75	11.25
Region 30	Matl. 2 - Surficial Overburden Layer	77,34,78,79,80	6.075
Region 31	Matl. 8 - Filter Sand	79,78,74,75	0.3
Region 32	Matl. 6 - Fine Drainage Gravel	80,82,83,90,81,87	9.2
Region 33	Matl. 8 - Filter Sand	80,77,89,84,82	9.6
Region 34	Matl. 1 - Embankment Material	77,85,88,86,84,89	104
Region 35	Matl. 2 - Surficial Overburden Layer	41,42,34,77,85	134.25
Region 36	Matl. 6 - Fine Drainage Gravel	87,81,76,75,79	0.3
Region 37	Matl. 6 - Fine Drainage Gravel	80,87,79	0.825

Current Slip Surface

Slip Surface: 34,477
F of S: 2.146
Volume: 552.90299 ft³
Weight: 66,044.184 lbs
Resisting Moment: 1,588,567.6 lbs-ft
Activating Moment: 741,278.13 lbs-ft
Resisting Force: 33,777.643 lbs
Activating Force: 15,830.429 lbs
F of S Rank: 1
Exit: (-55.816324, 18.227892) ft
Entry: (3.5941317, 34.5) ft
Radius: 30.308881 ft
Center: (-34.468892, 56.450936) ft

Slip Slices

	X (ft)	Y (ft)	PWP (psf)	Base Normal Stress (psf)	Frictional Strength (psf)	Cohesive Strength (psf)

Slice 1	-55.649247	18.113946	-81.85757	36.101575	22.558768	0
Slice 2	-54.749031	17.5	-68.764701	230.3557	149.59474	0
Slice 3	-53.282754	16.5	-4.3745268	565.49089	395.96099	0
Slice 4	-52.262957	15.8045	43.631391	757.88312	463.8405	0
Slice 5	-51.151357	15.3045	79.190564	724.45462	419.03938	0
Slice 6	-48.914257	14.47875	152.83818	929.80054	430.67727	0
Slice 7	-46.704326	13.843125	218.16528	997.61417	432.05557	0
Slice 8	-45.108777	13.614375	244.64359	1,097.5027	472.74751	0
Slice 9	-43.275901	13.3516	271.37751	1,219.7946	547.56884	0
Slice 10	-41.18545	13.170875	290.35007	1,264.5379	562.44763	0
Slice 11	-39.07475	13.106225	301.43366	1,366.3017	614.8018	0
Slice 12	-37.002675	13.134825	305.97375	1,389.1084	625.34803	0
Slice 13	-34.969225	13.256675	303.96156	1,458.1111	666.34851	0
Slice 14	-33.228809	13.4088	298.9025	1,464.368	672.8818	0
Slice 15	-31.283888	13.6539	282.74096	1,514.8328	682.95963	0
Slice 16	-28.841429	13.9617	257.51586	1,579.878	732.99728	0
Slice 17	-26.669657	14.3367	223.04902	1,548.8765	734.91817	0
Slice 18	-24.764057	14.77995	178.93661	1,575.5791	774.17157	0
Slice 19	-22.819461	15.50105	125.72707	1,383.8753	817.05096	0

Slice 20	-21.712911	16.059	91.675067	1,356.0831	885.34802	0
Slice 21	-20.817864	16.559	61.56831	1,292.3531	861.80483	0
Slice 22	-19.298664	17.4201	9.5991829	1,257.5587	810.43437	0
Slice 23	-18.42421	17.9201	-20.649313	1,220.4554	792.57301	0
Slice 24	-17.343191	18.568113	-60.535903	1,197.0701	748.0124	0
Slice 25	-15.44773	19.704341	-131.30875	1,148.7039	717.78989	0
Slice 26	-13.90925	20.626577	-170.09882	1,076.5655	699.12984	0
Slice 27	-12.40925	21.520168	-167.93517	1,045.3241	678.84142	0
Slice 28	-10.89175	22.420518	-191.99054	1,036.625	647.75516	0
Slice 29	-9.462625	23.356593	-241.38844	948.3557	592.59841	0
Slice 30	-7.820875	24.506979	-298.8795	892.94414	557.97343	0
Slice 31	-6.5	25.432526	-343.59513	833.05053	520.54775	0
Slice 32	-5.59675	26.06544	-373.75788	928.02388	579.89368	0
Slice 33	-4.019025	27.398625	-439.26203	745.99545	466.14969	0
Slice 34	-1.670075	29.499875	-543.80959	567.21859	354.43751	0
Slice 35	0.27677686	31.262875	-633.44827	412.86662	257.9877	0
Slice 36	1.8523769	32.716075	-710.09051	290.51685	181.53508	0
Slice 37	3.1248658	33.97845	-779.41444	168.69566	118.12197	0

Slope Stability US Slope G&R (RDD)

Report generated using GeoStudio 2012. Copyright © 1991-2013 GEO-SLOPE International Ltd.

File Information

Title: LOWP PIR Analysis Section H
Created By: Viessman, Michael W CIV USARMY CESAJ (US)
Last Edited By: Viessman, Michael W CIV USARMY CESAJ (US)
Revision Number: 574
File Version: 8.2
Tool Version: 8.12.3.7901
Date: 8/27/2018
Time: 11:45:48 AM
File Name: Section H EOC USP-DSP w toe drain.gsz
Directory: C:\Users\k3engmwv\Documents\LOWP\FY17-18 PIR Work\SEEP and SLOPEW Files\
Last Solved Date: 8/27/2018
Last Solved Time: 10:50:02 AM

Project Settings

Length(L) Units: feet
Time(t) Units: Seconds
Force(F) Units: lbf
Pressure(p) Units: psf
Strength Units: psf
Unit Weight of Water: 62.4 pcf
View: 2D
Element Thickness: 1

Analysis Settings

Slope Stability US Slope G&R (RDD)

Description: RDD from NP
Kind: SLOPE/W
Method: Spencer
Settings
Lambda
Lambda 1: -1
Lambda 2: -0.8
Lambda 3: -0.6
Lambda 4: -0.4
Lambda 5: -0.2
Lambda 6: 0
Lambda 7: 0.2

Lambda 8: 0.4
Lambda 9: 0.6
Lambda 10: 0.8
Lambda 11: 1
PWP Conditions Source: Piezometric Line
Apply Phreatic Correction: Yes
Use Staged Rapid Drawdown: Yes
Slip Surface
Direction of movement: Left to Right
Use Passive Mode: No
Slip Surface Option: Grid and Radius
Critical slip surfaces saved: 1
Optimize Critical Slip Surface Location: Yes
Tension Crack
Tension Crack Option: (none)
F of S Distribution
F of S Calculation Option: Constant
Advanced
Number of Slices: 30
F of S Tolerance: 0.001
Minimum Slip Surface Depth: 1 ft
Optimization Maximum Iterations: 2,000
Optimization Convergence Tolerance: 1e-007
Starting Optimization Points: 8
Ending Optimization Points: 16
Complete Passes per Insertion: 1
Driving Side Maximum Convex Angle: 5 °
Resisting Side Maximum Convex Angle: 1 °

Materials

Matl. 1 - Embankment Material

Model: Mohr-Coulomb
Unit Weight: 125 pcf
Cohesion': 0 psf
Phi': 32 °
Phi-B: 0 °
Total Cohesion: 420 psf
Total Phi: 0 °
Constant Unit Wt. Above Water Table: 120 pcf
Pore Water Pressure
Piezometric Line: 1
Piezometric Line After Drawdown: 2

Matl. 2 - Surficial Overburden Layer

Model: Mohr-Coulomb

Unit Weight: 109 pcf
Cohesion': 0 psf
Phi': 29 °
Phi-B: 0 °
Total Cohesion: 420 psf
Total Phi: 0 °
Constant Unit Wt. Above Water Table: 106 pcf
Pore Water Pressure
Piezometric Line: 1
Piezometric Line After Drawdown: 2

Matl. 3 - Shallow Alluvial Deposits

Model: Mohr-Coulomb
Unit Weight: 123 pcf
Cohesion': 0 psf
Phi': 30 °
Phi-B: 0 °
Total Cohesion: 420 psf
Total Phi: 0 °
Pore Water Pressure
Piezometric Line: 1
Piezometric Line After Drawdown: 2

Matl. 4 - Deeper Marine Deposits

Model: Mohr-Coulomb
Unit Weight: 125 pcf
Cohesion': 0 psf
Phi': 33 °
Phi-B: 0 °
Total Cohesion: 420 psf
Total Phi: 0 °
Pore Water Pressure
Piezometric Line: 1
Piezometric Line After Drawdown: 2

Matl. 5 - Soil Cement Armoring

Model: Mohr-Coulomb
Unit Weight: 125 pcf
Cohesion': 0 psf
Phi': 35 °
Phi-B: 0 °
Total Cohesion: 2,500 psf
Total Phi: 0 °
Constant Unit Wt. Above Water Table: 120 pcf
Pore Water Pressure
Piezometric Line: 1
Piezometric Line After Drawdown: 2

Matl. 6 - Fine Drainage Gravel

Model: Mohr-Coulomb
Unit Weight: 130 pcf
Cohesion': 0 psf
Phi': 35 °
Phi-B: 0 °
Total Cohesion: 750 psf
Total Phi: 0 °
Constant Unit Wt. Above Water Table: 115 pcf
Pore Water Pressure
    Piezometric Line: 1
    Piezometric Line After Drawdown: 2

Matl. 8 - Filter Sand

Model: Mohr-Coulomb
Unit Weight: 120 pcf
Cohesion': 0 psf
Phi': 33 °
Phi-B: 0 °
Total Cohesion: 500 psf
Total Phi: 0 °
Constant Unit Wt. Above Water Table: 115 pcf
Pore Water Pressure
    Piezometric Line: 1
    Piezometric Line After Drawdown: 2

Matl. 9 Concrete Outfall Works

Model: Bedrock (Impenetrable)
Pore Water Pressure
    Piezometric Line: 1
    Piezometric Line After Drawdown: 2

Slip Surface Grid

Upper Left: (45.7361, 199.5947) ft
Lower Left: (45.7361, 121.5108) ft
Lower Right: (152.6033, 121.5108) ft
Grid Horizontal Increment: 25
Grid Vertical Increment: 25
Left Projection Angle: 0 °
Right Projection Angle: 0 °

Slip Surface Radius

Upper Left Coordinate: (13.4971, 14.6347) ft
Upper Right Coordinate: (144.3382, 14.8036) ft
Lower Left Coordinate: (13.62, -24.8305) ft

Lower Right Coordinate: (143.3866, -25.0416) ft
Number of Increments: 50
Left Projection: No
Left Projection Angle: 135 °
Right Projection: No
Right Projection Angle: 45 °

Slip Surface Limits

Left Coordinate: (-1,700, 15) ft
Right Coordinate: (1,600, 15) ft

Piezometric Lines

Piezometric Line 1

Coordinates

	X (ft)	Y (ft)
Coordinate 1	-1,700	18
Coordinate 2	-119.5	18
Coordinate 3	-119	18
Coordinate 4	-97.5	16
Coordinate 5	-92	15.5
Coordinate 6	-88	15
Coordinate 7	-56.5	15
Coordinate 8	-56.5	16
Coordinate 9	-54	16.5
Coordinate 10	-22	17
Coordinate 11	-9.5	17
Coordinate 12	-4.5	17.5
Coordinate 13	7	19
Coordinate 14	39	21.5
Coordinate 15	41.5	23
Coordinate 16	1,600	23

Piezometric Line 2

Coordinates

	X (ft)	Y (ft)

Coordinate 1	-1,700	18
Coordinate 2	-119.5	18
Coordinate 3	-119	18
Coordinate 4	-97.5	16
Coordinate 5	-92	15.5
Coordinate 6	-88	15
Coordinate 7	1,600	15

Surcharge Loads

Surcharge Load 1

Surcharge (Unit Weight): 200 pcf
Direction: Vertical

Coordinates

	X (ft)	Y (ft)
	-6	35.5
	6	35.5

Points

	X (ft)	Y (ft)
Point 1	-56.5	18
Point 2	-14.5	18
Point 3	-14.5	28
Point 4	-11.5	28
Point 5	-11.5	15
Point 6	-7	34.5
Point 7	-7	33.4
Point 8	6.8	33.4
Point 9	14	31
Point 10	13.7	30.1
Point 11	51.6	17.5
Point 12	54.2	15
Point 13	55.0033	16.4828
Point 14	54.9	16.4

Point 15	54.8636	16.2065
Point 16	55.097	16.0075
Point 17	55.3031	16.0832
Point 18	55.3561	16.2916
Point 19	55.3	16.4
Point 20	55.1797	16.4906
Point 21	62.3	15
Point 22	59.3	16
Point 23	57.8	16.5
Point 24	61	16.5
Point 25	7	34.5
Point 26	62.3	13.5
Point 27	70.3	13.5
Point 28	70.3	11.5
Point 29	72.3	11.5
Point 30	72.3	13.5
Point 31	72.3	15
Point 32	65.5	15
Point 33	62.5	16
Point 34	-90.5	13.5
Point 35	100	15
Point 36	100	13.5
Point 37	100	-14.5
Point 38	-90.5	-14.5
Point 39	100	-114.5
Point 40	-90.5	-114.5
Point 41	-180	15
Point 42	-180	13.5
Point 43	-180	-14.5
Point 44	-180	-114.5
Point 45	1,600	15
Point 46	1,600	13.5
Point 47	1,600	-14.5
Point 48	1,600	-114.5
Point 49	41.5	23
Point 50	55.3546	16.1839

Point 51	54.9487	16.066
Point 52	55.2227	16.0254
Point 53	-1,700	15
Point 54	-1,700	13.5
Point 55	-1,700	-14.5
Point 56	-1,700	-114.5
Point 57	-65.5	13.5
Point 58	-55.5	13.5
Point 59	-55.5	15
Point 60	-55.5	16
Point 61	-55.5	17
Point 62	-55.5	18
Point 63	-11.5	16
Point 64	-12.5	16
Point 65	-12.5	17
Point 66	-56.5	16
Point 67	-56.5	17
Point 68	-65.5	15
Point 69	-56.5	15
Point 70	-70.5	13.5
Point 71	-70.5	14.25
Point 72	-65.5	14.25
Point 73	-70.5	15
Point 74	-85.5	13.5
Point 75	-85.5	14.25
Point 76	-85.5	15
Point 77	-90.5	15
Point 78	-85.9	13.5
Point 79	-85.9	14.25
Point 80	-88.1	15
Point 81	-85.8	15
Point 82	-100.1	19
Point 83	-97.8	19
Point 84	-102.5	19
Point 85	-128.5	15
Point 86	-116.5	19

Point 87	-85.9	15
Point 88	-119.5	18
Point 89	-99.5	18
Point 90	-94.8	18
Point 91	29.5	27

Regions

	Material	Points	Area (ft²)
Region 1	Matl. 1 - Embankment Material	1,6,7,8,9,10,11,12,5,63,4,3,2,62	1,101.7
Region 2		13,14,15,51,16,52,17,50,18,19,20	0.18474
Region 3	Matl. 8 - Filter Sand	9,10,11,12,21,22,16,51,15,14,13,20,23	52.737
Region 4	Matl. 5 - Soil Cement Armoring	6,7,8,9,23,24,49,91,25	74.19
Region 5	Matl. 5 - Soil Cement Armoring	22,21,26,27,28,29,30,31,32,33	22.2
Region 6	Matl. 2 - Surficial Overburden Layer	31,35,36,30	41.55
Region 7	Matl. 4 - Deeper Marine Deposits	38,37,39,40	19,050
Region 8	Matl. 3 - Shallow Alluvial Deposits	42,34,38,43	2,506
Region 9	Matl. 4 - Deeper Marine Deposits	43,38,40,44	8,950
Region 10	Matl. 2 - Surficial Overburden Layer	35,45,46,36	2,250
Region 11	Matl. 3 - Shallow Alluvial Deposits	36,46,47,37	42,000
Region 12	Matl. 4 - Deeper Marine Deposits	37,47,48,39	1.5e+005
Region 13	Matl. 8 - Filter Sand	20,23,22,16,52,17,50,18,19	1.5978
Region 14	Matl. 5 - Soil Cement Armoring	23,24,33,22	1.6

Region 15	Matl. 2 - Surficial Overburden Layer	53,41,42,54	2,280
Region 16	Matl. 3 - Shallow Alluvial Deposits	42,43,55,54	42,560
Region 17	Matl. 4 - Deeper Marine Deposits	55,43,44,56	1.52e+005
Region 18	Matl. 3 - Shallow Alluvial Deposits	34,38,37,36,30,29,28,27,26,58,57,70,74,78	5,330
Region 19	Matl. 2 - Surficial Overburden Layer	59,58,26,21,12,5	176.7
Region 20	Matl. 8 - Filter Sand	60,59,5,63,64	44
Region 21	Matl. 6 - Fine Drainage Gravel	61,60,64,65	43
Region 22	Matl. 8 - Filter Sand	62,61,65,64,63,4,3,2	75
Region 23	Matl. 6 - Fine Drainage Gravel	67,66,60,61	1
Region 24	Matl. 9 Concrete Outfall Works	1,62,61,67	1
Region 25	Matl. 9 Concrete Outfall Works	68,72,57,58,59,60,66,69	16
Region 26	Matl. 6 - Fine Drainage Gravel	73,71,72,68	3.75
Region 27	Matl. 6 - Fine Drainage Gravel	76,75,71,73	11.25
Region 28	Matl. 8 - Filter Sand	71,72,57,70	3.75
Region 29	Matl. 8 - Filter Sand	71,70,74,75	11.25
Region 30	Matl. 2 - Surficial Overburden Layer	77,34,78,79,80	6.075
Region 31	Matl. 8 - Filter Sand	79,78,74,75	0.3
Region 32	Matl. 6 - Fine Drainage Gravel	80,82,83,90,81,87	9.2
Region 33	Matl. 8 - Filter Sand	80,77,89,84,82	9.6

Region 34	Matl. 1 - Embankment Material	77,85,88,86,84,89	104
Region 35	Matl. 2 - Surficial Overburden Layer	41,42,34,77,85	134.25
Region 36	Matl. 6 - Fine Drainage Gravel	87,81,76,75,79	0.3
Region 37	Matl. 6 - Fine Drainage Gravel	80,87,79	0.825

Current Slip Surface

Slip Surface: 110
F of S: 1.424
Volume: 1,008.1774 ft³
Weight: 120,391.48 lbs
Resisting Moment: 4,408,449.5 lbs-ft
Activating Moment: 3,096,747.8 lbs-ft
Resisting Force: 36,973.732 lbs
Activating Force: 25,973.677 lbs
F of S Rank: 2
Exit: (90.081604, 15) ft
Entry: (-13.9012, 32.1996) ft
Radius: 112.36509 ft
Center: (54.285476, 121.5108) ft

Slip Slices

	X (ft)	Y (ft)	PWP (psf)	Base Normal Stress (psf)	Frictional Strength (psf)	Cohesive Strength (psf)
Slice 1	-11.7006	30.602291	-973.58295	203.42284	127.1127	0
Slice 2	-8.25	28.167542	-821.65464	529.99427	331.17717	0
Slice 3	-6.5	27.008494	-749.33004	690.13509	0	387.28116
Slice 4	-5.25	26.218312	-700.02264	945.76886	0	437.5392
Slice 5	-2.75	24.718538	-606.43679	1,114.459	0	470.68991
Slice 6	0.75	22.73882	-482.9024	1,342.5799	0	515.88593

Slice 7	4.25	20.919825	-369.39709	1,558.4344	0	559.04813
Slice 8	6.4	19.860916	-303.32113	1,510.265	0	549.49932
Slice 9	6.9	19.625974	-288.66076	1,538.8373	0	555.25294
Slice 10	7.5409466	19.331994	-270.31642	1,555.6098	0	558.65129
Slice 11	9.4864198	18.473854	-216.76848	1,593.4776	0	558.10946
Slice 12	12.295473	17.297269	-143.34959	1,641.8856	0	551.84037
Slice 13	13.85	16.673499	-104.42632	1,663.2603	0	547.5756
Slice 14	16.244674	15.807822	-50.408095	1,686.4498	0	540.16872
Slice 15	20.898865	14.25	46.8	1,715.5354	0	501.43759
Slice 16	24.856286	13.079884	119.81525	1,718.2645	0	491.65566
Slice 17	27.952095	12.286576	169.31765	1,713.3934	0	478.60359
Slice 18	31.083333	11.579206	213.45752	1,696.2636	0	463.93282
Slice 19	34.25	10.958081	252.21576	1,666.589	0	447.78353
Slice 20	37.416667	10.430686	285.12522	1,624.4036	0	430.19549
Slice 21	39.101302	10.176422	300.99126	1,599.5933	0	455.81055
Slice 22	39.758487	10.09013	306.37587	1,587.7523	0	449.61405
Slice 23	40.907185	9.9465667	315.33424	1,565.9433	0	438.30145
Slice 24	43.183333	9.7083215	330.20074	1,514.4672	0	386.79564
Slice 25	46.55	9.4249908	347.88057	1,432.5719	0	380.15489

Slice 26	49.916667	9.2433118	359.21735	1,336.4988	0	372.1331
Slice 27	52.9	9.1617746	364.30527	1,236.3153	0	363.0534
Slice 28	54.5318	9.1464705	365.26024	1,175.8248	0	357.36826
Slice 29	54.8818	9.1472944	365.20883	1,148.5756	0	353.25868
Slice 30	54.92435	9.1475295	365.19416	1,124.9359	0	348.56889
Slice 31	54.976	9.1478357	365.17505	1,112.1355	0	346.15484
Slice 32	55.05015	9.1483223	365.14469	1,103.1811	0	344.63123
Slice 33	55.13835	9.148955	365.10521	1,098.0756	0	343.96329
Slice 34	55.2012	9.1494441	365.07469	1,098.5973	0	344.34577
Slice 35	55.2629	9.149969	365.04193	1,105.4219	0	346.02575
Slice 36	55.3296	9.150565	365.00475	1,122.6434	0	349.8757
Slice 37	56.57805	9.1757492	363.43325	1,101.1938	0	351.1349
Slice 38	58.55	9.2291727	360.09963	1,025.549	0	344.70766
Slice 39	60.15	9.3020829	355.55003	960.11845	0	339.03518
Slice 40	61.65	9.3892018	350.11381	891.15091	312.36792	0
Slice 41	62.4	9.4391365	346.99788	882.42497	309.12898	0
Slice 42	64	9.5765586	338.42274	796.82195	264.65691	0
Slice 43	67.9	9.9997593	312.01502	682.30316	213.78596	0
Slice 44	71.3	10.445973	284.17129	636.29977	203.30147	0

Slice 45	73.920321	10.886761	256.66612	548.34963	168.40355	0
Slice 46	77.160964	11.511316	217.69385	468.43118	144.76326	0
Slice 47	80.401607	12.235525	172.50321	371.7211	115.0185	0
Slice 48	83.642249	13.061386	120.9695	256.91957	78.490807	0
Slice 49	87.672087	14.25	46.8	97.876541	28.312189	0

Slope Stability Ext Slope G&R (EOC)

Report generated using GeoStudio 2012. Copyright © 1991-2013 GEO-SLOPE International Ltd.

File Information

Title: LOWP PIR Analysis Section B
Created By: Viessman, Michael W CIV USARMY CESAJ (US)
Last Edited By: Viessman, Michael W CIV USARMY CESAJ (US)
Revision Number: 545
File Version: 8.2
Tool Version: 8.12.3.7901
Date: 8/26/2018
Time: 10:03:59 PM
File Name: PR Outlet to C38.gsz
Directory: C:\Users\k3engmwv\Documents\LOWP\FY17-18 PIR Work\SEEP and SLOPEW Files\
Last Solved Date: 8/26/2018
Last Solved Time: 9:05:30 PM

Project Settings

Length(L) Units: feet
Time(t) Units: Seconds
Force(F) Units: lbf
Pressure(p) Units: psf
Strength Units: psf
Unit Weight of Water: 62.4 pcf
View: 2D
Element Thickness: 1

Analysis Settings

Slope Stability Ext Slope G&R (EOC)

Description: GW at 10ft
Kind: SLOPE/W
Parent: Steady-State Seepage (EOC)
Method: Spencer
Settings
- Lambda
  - Lambda 1: -1
  - Lambda 2: -0.8
  - Lambda 3: -0.6
  - Lambda 4: -0.4
  - Lambda 5: -0.2
  - Lambda 6: 0

Lambda 7: 0.2
Lambda 8: 0.4
Lambda 9: 0.6
Lambda 10: 0.8
Lambda 11: 1
PWP Conditions Source: Parent Analysis
Slip Surface
Direction of movement: Right to Left
Use Passive Mode: No
Slip Surface Option: Grid and Radius
Critical slip surfaces saved: 1
Optimize Critical Slip Surface Location: Yes
Tension Crack
Tension Crack Option: (none)
F of S Distribution
F of S Calculation Option: Constant
Advanced
Number of Slices: 30
F of S Tolerance: 0.001
Minimum Slip Surface Depth: 1 ft
Optimization Maximum Iterations: 2,000
Optimization Convergence Tolerance: 1e-007
Starting Optimization Points: 8
Ending Optimization Points: 16
Complete Passes per Insertion: 1
Driving Side Maximum Convex Angle: 5 °
Resisting Side Maximum Convex Angle: 1 °

Materials

Matl. 1 - Embankment Material

Model: Mohr-Coulomb
Unit Weight: 125 pcf
Cohesion': 0 psf
Phi': 32 °
Phi-B: 0 °
Constant Unit Wt. Above Water Table: 120 pcf

Matl. 2 - Surficial Overburden Layer

Model: Mohr-Coulomb
Unit Weight: 109 pcf
Cohesion': 0 psf
Phi': 29 °
Phi-B: 0 °
Constant Unit Wt. Above Water Table: 106 pcf

Matl. 3 - Shallow Alluvial Deposits

Model: Mohr-Coulomb
Unit Weight: 123 pcf
Cohesion': 0 psf
Phi': 30 °
Phi-B: 0 °

Matl. 4 - Deeper Marine Deposits

Model: Mohr-Coulomb
Unit Weight: 125 pcf
Cohesion': 0 psf
Phi': 33 °
Phi-B: 0 °

Slip Surface Grid

Upper Left: (-262.2639, 239.5947) ft
Lower Left: (-262.2639, 161.5108) ft
Lower Right: (-155.3967, 161.5108) ft
Grid Horizontal Increment: 25
Grid Vertical Increment: 25
Left Projection Angle: 0 °
Right Projection Angle: 0 °

Slip Surface Radius

Upper Left Coordinate: (-242.3029, 15.0347) ft
Upper Right Coordinate: (-111.4618, 15.2036) ft
Lower Left Coordinate: (-242.18, -24.4305) ft
Lower Right Coordinate: (-112.4134, -24.6416) ft
Number of Increments: 50
Left Projection: No
Left Projection Angle: 135 °
Right Projection: No
Right Projection Angle: 45 °

Slip Surface Limits

Left Coordinate: (-1,200, 15) ft
Right Coordinate: (1,200, 15) ft

Points

	X (ft)	Y (ft)
Point 1	-183	15

Point 2	-138	30
Point 3	-124	30
Point 4	-100	22
Point 5	-70.1	22
Point 6	-49	15
Point 7	49	15
Point 8	70	22
Point 9	100	22
Point 10	124	30
Point 11	138	30
Point 12	183	15
Point 13	-183	13.5
Point 14	-44.5	13.5
Point 15	-183	-14.5
Point 16	-44.5	-14.5
Point 17	-183	-114.5
Point 18	-44.5	-114.5
Point 19	44.5	-14.5
Point 20	44.5	13.5
Point 21	25	7
Point 22	-25	7
Point 23	44.5	-114.5
Point 24	183	13.5
Point 25	183	-14.5
Point 26	183	-114.5
Point 27	-64	19.9763
Point 28	64	20
Point 29	-174	18
Point 30	174	18
Point 31	1,200	15
Point 32	1,200	13.5
Point 33	1,200	-14.5
Point 34	1,200	-114.5
Point 35	-1,200	15
Point 36	-1,200	13.5
Point 37	-1,200	-14.5

Point 38	-1,200	-114.5
Point 39	-34.2	10.0667
Point 40	34.2	10.0667

Regions

	Material	Points	Area (ft²)
Region 1	Matl. 1 - Embankment Material	1,29,2,3,4,5,27,6	1,094.6
Region 2	Matl. 1 - Embankment Material	7,28,8,9,10,11,30,12	1,095
Region 3	Matl. 2 - Surficial Overburden Layer	1,13,14,6	204.38
Region 4	Matl. 3 - Shallow Alluvial Deposits	13,15,16,14	3,878
Region 5	Matl. 4 - Deeper Marine Deposits	15,17,18,16	13,850
Region 6	Matl. 3 - Shallow Alluvial Deposits	14,16,19,20,40,21,22,39	2,040.3
Region 7	Matl. 4 - Deeper Marine Deposits	16,19,23,18	8,900
Region 8	Matl. 2 - Surficial Overburden Layer	20,7,12,24	204.38
Region 9	Matl. 3 - Shallow Alluvial Deposits	20,24,25,19	3,878
Region 10	Matl. 4 - Deeper Marine Deposits	19,25,26,23	13,850
Region 11	Matl. 2 - Surficial Overburden Layer	12,31,32,24	1,525.5
Region 12	Matl. 3 - Shallow Alluvial Deposits	24,32,33,25	28,476
Region 13	Matl. 4 - Deeper Marine Deposits	25,33,34,26	1.017e+005
Region 14	Matl. 2 - Surficial Overburden Layer	35,1,13,36	1,525.5
Region 15	Matl. 3 - Shallow Alluvial Deposits	36,13,15,37	28,476
Region 16	Matl. 4 - Deeper Marine Deposits	37,15,17,38	1.017e+005

Current Slip Surface

Slip Surface: 34,477
F of S: 1.879
Volume: 29.590588 ft³
Weight: 3,550.6007 lbs
Resisting Moment: 443,264.71 lbs-ft
Activating Moment: 235,844.43 lbs-ft
Resisting Force: 1,997.0457 lbs
Activating Force: 1,062.5513 lbs
F of S Rank: 1
Exit: (-183.19391, 15) ft
Entry: (-137.98051, 30) ft
Radius: 21.99938 ft
Center: (-228.0664, 220.85456) ft

Slip Slices

	X (ft)	Y (ft)	PWP (psf)	Base Normal Stress (psf)	Frictional Strength (psf)	Cohesive Strength (psf)
Slice 1	-183.09696	14.993854	-311.6165	0.75377178	0.41782252	0
Slice 2	-182.74515	14.971554	-310.22498	15.28396	8.4720375	0
Slice 3	-182.40996	14.9777	-310.60848	24.130861	13.375955	0
Slice 4	-181.63289	15.1934	-324.06816	29.311502	18.315859	0
Slice 5	-180.23941	15.5802	-348.20448	37.993259	23.740823	0
Slice 6	-178.84594	15.967	-372.3408	46.675015	29.165787	0
Slice 7	-177.46173	16.361117	-396.93368	53.713938	33.564194	0
Slice 8	-176.0868	16.76255	-421.98312	60.013535	37.500619	0
Slice 9	-174.71187	17.163983	-447.03256	66.313132	41.437044	0
Slice 10	-174.0122	17.368266	-459.77977	69.506045	43.432197	0
Slice 11	-173.315	17.572026	-472.49441	72.677514	45.413951	0
Slice 12	-171.945	17.972416	-497.47873	78.909461	49.308103	0
Slice 13	-170.575	18.372805	-522.46304	85.141407	53.202256	0
Slice 14	-169.15785	18.787825	-548.36028	91.428298	57.130741	0
Slice 15	-167.69355	19.217475	-575.17044	97.89625	61.172366	0
Slice 16	-166.2901	19.63425	-601.1772	103.07399	64.407777	0
Slice 17	-164.9475	20.03815	-626.38056	107.88042	67.411171	0

Slice 18	-163.67765	20.446175	-651.84132	106.71789	66.684741	0
Slice 19	-162.48055	20.858325	-677.55948	105.31052	65.805318	0
Slice 20	-161.03375	21.36145	-708.95448	102.71018	64.180443	0
Slice 21	-159.33725	21.95555	-746.02632	99.652289	62.269661	0
Slice 22	-157.64417	22.552025	-783.24636	95.976464	59.972751	0
Slice 23	-155.95452	23.150875	-820.6146	92.176155	57.598054	0
Slice 24	-154.39653	23.702625	-855.0438	88.751469	55.458073	0
Slice 25	-152.97018	24.207275	-886.53396	85.636134	53.511396	0
Slice 26	-152.1063	24.5151	-905.74224	82.803677	51.74148	0
Slice 27	-151.16614	24.861425	-927.35292	79.314805	49.561391	0
Slice 28	-149.58721	25.443075	-963.64788	73.46118	45.90364	0
Slice 29	-148.00829	26.024725	-999.94284	67.607556	42.24589	0
Slice 30	-146.42936	26.606375	-1,036.2378	61.753931	38.588139	0
Slice 31	-144.89465	27.186575	-1,072.4423	53.862116	33.656786	0
Slice 32	-143.40415	27.765325	-1,108.5563	45.298192	28.305452	0
Slice 33	-141.7209	28.430125	-1,150.0398	34.216616	21.380915	0
Slice 34	-139.8449	29.180975	-1,196.8928	21.185423	13.238121	0
Slice 35	-138.45345	29.773533	-1,233.8685	7.4778951	4.6727075	0
Slice 36	-137.99025	29.995333	-1,247.7088	0.46335079	0.28953371	0

Slope Stability Int Slope G&R (EOC)

Report generated using GeoStudio 2012. Copyright © 1991-2013 GEO-SLOPE International Ltd.

File Information

Title: LOWP PIR Analysis Section B
Created By: Viessman, Michael W CIV USARMY CESAJ (US)
Last Edited By: Viessman, Michael W CIV USARMY CESAJ (US)
Revision Number: 550
File Version: 8.2
Tool Version: 8.12.3.7901
Date: 8/26/2018
Time: 10:09:32 PM
File Name: PR Outlet to C38.gsz
Directory: C:\Users\k3engmwv\Documents\LOWP\FY17-18 PIR Work\SEEP and SLOPEW Files\
Last Solved Date: 8/26/2018
Last Solved Time: 9:10:08 PM

Project Settings

Length(L) Units: feet
Time(t) Units: Seconds
Force(F) Units: lbf
Pressure(p) Units: psf
Strength Units: psf
Unit Weight of Water: 62.4 pcf
View: 2D
Element Thickness: 1

Analysis Settings

Slope Stability Int Slope G&R (EOC)

Description: GW at 10ft
Kind: SLOPE/W
Parent: Steady-State Seepage (EOC)
Method: Spencer
Settings
- Lambda
  - Lambda 1: -1
  - Lambda 2: -0.8
  - Lambda 3: -0.6
  - Lambda 4: -0.4
  - Lambda 5: -0.2
  - Lambda 6: 0

Lambda 7: 0.2
Lambda 8: 0.4
Lambda 9: 0.6
Lambda 10: 0.8
Lambda 11: 1
PWP Conditions Source: Parent Analysis
Slip Surface
Direction of movement: Left to Right
Use Passive Mode: No
Slip Surface Option: Grid and Radius
Critical slip surfaces saved: 1
Optimize Critical Slip Surface Location: Yes
Tension Crack
Tension Crack Option: (none)
F of S Distribution
F of S Calculation Option: Constant
Advanced
Number of Slices: 30
F of S Tolerance: 0.001
Minimum Slip Surface Depth: 1 ft
Optimization Maximum Iterations: 2,000
Optimization Convergence Tolerance: 1e-007
Starting Optimization Points: 8
Ending Optimization Points: 16
Complete Passes per Insertion: 1
Driving Side Maximum Convex Angle: 5 °
Resisting Side Maximum Convex Angle: 1 °

Materials

Matl. 1 - Embankment Material

Model: Mohr-Coulomb
Unit Weight: 125 pcf
Cohesion': 0 psf
Phi': 32 °
Phi-B: 0 °
Constant Unit Wt. Above Water Table: 120 pcf

Matl. 2 - Surficial Overburden Layer

Model: Mohr-Coulomb
Unit Weight: 109 pcf
Cohesion': 0 psf
Phi': 29 °
Phi-B: 0 °
Constant Unit Wt. Above Water Table: 106 pcf

Matl. 3 - Shallow Alluvial Deposits

Model: Mohr-Coulomb
Unit Weight: 123 pcf
Cohesion': 0 psf
Phi': 30 °
Phi-B: 0 °

Matl. 4 - Deeper Marine Deposits

Model: Mohr-Coulomb
Unit Weight: 125 pcf
Cohesion': 0 psf
Phi': 33 °
Phi-B: 0 °

Slip Surface Grid

Upper Left: (-63.4639, 97.2947) ft
Lower Left: (-63.4639, 19.2108) ft
Lower Right: (43.4033, 19.2108) ft
Grid Horizontal Increment: 25
Grid Vertical Increment: 25
Left Projection Angle: 0 °
Right Projection Angle: 0 °

Slip Surface Radius

Upper Left Coordinate: (-140.2029, 30.2347) ft
Upper Right Coordinate: (-9.3618, 30.4036) ft
Lower Left Coordinate: (-140.08, -9.2305) ft
Lower Right Coordinate: (-10.3134, -9.4416) ft
Number of Increments: 50
Left Projection: No
Left Projection Angle: 135 °
Right Projection: No
Right Projection Angle: 45 °

Slip Surface Limits

Left Coordinate: (-1,200, 15) ft
Right Coordinate: (1,200, 15) ft

Points

	X (ft)	Y (ft)
Point 1	-183	15

Point 2	-138	30
Point 3	-124	30
Point 4	-100	22
Point 5	-70.1	22
Point 6	-49	15
Point 7	49	15
Point 8	70	22
Point 9	100	22
Point 10	124	30
Point 11	138	30
Point 12	183	15
Point 13	-183	13.5
Point 14	-44.5	13.5
Point 15	-183	-14.5
Point 16	-44.5	-14.5
Point 17	-183	-114.5
Point 18	-44.5	-114.5
Point 19	44.5	-14.5
Point 20	44.5	13.5
Point 21	25	7
Point 22	-25	7
Point 23	44.5	-114.5
Point 24	183	13.5
Point 25	183	-14.5
Point 26	183	-114.5
Point 27	-64	19.9763
Point 28	64	20
Point 29	-174	18
Point 30	174	18
Point 31	1,200	15
Point 32	1,200	13.5
Point 33	1,200	-14.5
Point 34	1,200	-114.5
Point 35	-1,200	15
Point 36	-1,200	13.5
Point 37	-1,200	-14.5

Point 38	-1,200	-114.5
Point 39	-34.2	10.0667
Point 40	34.2	10.0667

Regions

	Material	Points	Area (ft²)
Region 1	Matl. 1 - Embankment Material	1,29,2,3,4,5,27,6	1,094.6
Region 2	Matl. 1 - Embankment Material	7,28,8,9,10,11,30,12	1,095
Region 3	Matl. 2 - Surficial Overburden Layer	1,13,14,6	204.38
Region 4	Matl. 3 - Shallow Alluvial Deposits	13,15,16,14	3,878
Region 5	Matl. 4 - Deeper Marine Deposits	15,17,18,16	13,850
Region 6	Matl. 3 - Shallow Alluvial Deposits	14,16,19,20,40,21,22,39	2,040.3
Region 7	Matl. 4 - Deeper Marine Deposits	16,19,23,18	8,900
Region 8	Matl. 2 - Surficial Overburden Layer	20,7,12,24	204.38
Region 9	Matl. 3 - Shallow Alluvial Deposits	20,24,25,19	3,878
Region 10	Matl. 4 - Deeper Marine Deposits	19,25,26,23	13,850
Region 11	Matl. 2 - Surficial Overburden Layer	12,31,32,24	1,525.5
Region 12	Matl. 3 - Shallow Alluvial Deposits	24,32,33,25	28,476
Region 13	Matl. 4 - Deeper Marine Deposits	25,33,34,26	1.017e+005
Region 14	Matl. 2 - Surficial Overburden Layer	35,1,13,36	1,525.5
Region 15	Matl. 3 - Shallow Alluvial Deposits	36,13,15,37	28,476
Region 16	Matl. 4 - Deeper Marine Deposits	37,15,17,38	1.017e+005

Current Slip Surface

Slip Surface: 4,415
F of S: 1.590
Volume: 13.381281 ft³
Weight: 1,645.8976 lbs
Resisting Moment: 13,305.242 lbs-ft
Activating Moment: 8,366.479 lbs-ft
Resisting Force: 602.22004 lbs
Activating Force: 378.6864 lbs
F of S Rank: 2
Exit: (-28.351716, 8.1172507) ft
Entry: (-42.2763, 12.758774) ft
Radius: 20.484049 ft
Center: (-29.266396, 28.580868) ft

Slip Slices

	X (ft)	Y (ft)	PWP (psf)	Base Normal Stress (psf)	Frictional Strength (psf)	Cohesive Strength (psf)
Slice 1	-42.038762	12.569291	-160.32374	9.8550278	5.6898029	0
Slice 2	-41.563686	12.201469	-137.37167	29.127807	16.816947	0
Slice 3	-41.088609	11.855231	-115.76642	47.104794	27.195965	0
Slice 4	-40.613533	11.52926	-95.425798	63.778673	36.822634	0
Slice 5	-40.138456	11.222411	-76.278464	79.14333	45.693423	0
Slice 6	-39.66338	10.933687	-58.262079	93.193065	53.805041	0
Slice 7	-39.188303	10.66221	-41.321904	105.92202	61.154109	0
Slice 8	-38.713227	10.407206	-25.409654	117.32374	67.736895	0
Slice 9	-38.23815	10.16799	-10.482574	127.39081	73.549121	0
Slice 10	-37.763074	9.9439534	3.4973095	136.38772	76.724316	0
Slice 11	-37.287997	9.7345543	16.563809	144.6416	73.945746	0
Slice 12	-36.812921	9.5393095	28.747085	151.26058	70.733202	0
Slice 13	-36.337844	9.3577873	40.074072	156.25461	67.076866	0
Slice 14	-35.862768	9.189602	50.568836	159.62973	62.966333	0
Slice 15	-35.387691	9.034409	60.252875	161.38819	58.390498	0
Slice 16	-34.912615	8.891901	69.145376	161.52854	53.337446	0
Slice 17	-34.437538	8.7618041	77.263423	160.04564	47.794334	0

Slice 18	-33.975066	8.6466943	84.446273	157.57226	42.219309	0
Slice 19	-33.525198	8.545749	90.745265	162.6914	41.538117	0
Slice 20	-33.07533	8.4553646	96.385247	166.56484	40.518208	0
Slice 21	-32.625462	8.3753996	101.37507	169.18011	39.147255	0
Slice 22	-32.175594	8.3057305	105.72242	170.52217	37.412154	0
Slice 23	-31.725726	8.2462514	109.43391	170.57341	35.298909	0
Slice 24	-31.275858	8.1968731	112.51512	169.31343	32.792517	0
Slice 25	-30.82599	8.1575223	114.97061	166.71881	29.876834	0
Slice 26	-30.376122	8.1281412	116.80399	162.76297	26.534432	0
Slice 27	-29.926254	8.1086866	118.01796	157.41594	22.746436	0
Slice 28	-29.476386	8.0991304	118.61426	150.64394	18.492342	0
Slice 29	-29.026518	8.0994587	118.59378	142.40915	13.749811	0
Slice 30	-28.57665	8.1096719	117.95647	132.66926	8.4944314	0

Slope Stability Ext Slope G&R (LT SSS)

Report generated using GeoStudio 2012. Copyright © 1991-2013 GEO-SLOPE International Ltd.

File Information

Title: LOWP PIR Analysis Section B
Created By: Viessman, Michael W CIV USARMY CESAJ (US)
Last Edited By: Viessman, Michael W CIV USARMY CESAJ (US)
Revision Number: 558
File Version: 8.2
Tool Version: 8.12.3.7901
Date: 8/26/2018
Time: 10:13:22 PM
File Name: PR Outlet to C38.gsz
Directory: C:\Users\k3engmwv\Documents\LOWP\FY17-18 PIR Work\SEEP and SLOPEW Files\
Last Solved Date: 8/26/2018
Last Solved Time: 9:15:28 PM

Project Settings

Length(L) Units: feet
Time(t) Units: Seconds
Force(F) Units: lbf
Pressure(p) Units: psf
Strength Units: psf
Unit Weight of Water: 62.4 pcf
View: 2D
Element Thickness: 1

Analysis Settings

Slope Stability Ext Slope G&R (LT SSS)

Description: GW at 10ft
Kind: SLOPE/W
Parent: Steady-State Seepage (LT SSS)
Method: Spencer
Settings
- Lambda
  - Lambda 1: -1
  - Lambda 2: -0.8
  - Lambda 3: -0.6
  - Lambda 4: -0.4
  - Lambda 5: -0.2
  - Lambda 6: 0

Lambda 7: 0.2
Lambda 8: 0.4
Lambda 9: 0.6
Lambda 10: 0.8
Lambda 11: 1
PWP Conditions Source: Parent Analysis
Slip Surface
Direction of movement: Right to Left
Use Passive Mode: No
Slip Surface Option: Grid and Radius
Critical slip surfaces saved: 1
Optimize Critical Slip Surface Location: Yes
Tension Crack
Tension Crack Option: (none)
F of S Distribution
F of S Calculation Option: Constant
Advanced
Number of Slices: 30
F of S Tolerance: 0.001
Minimum Slip Surface Depth: 1 ft
Optimization Maximum Iterations: 2,000
Optimization Convergence Tolerance: 1e-007
Starting Optimization Points: 8
Ending Optimization Points: 16
Complete Passes per Insertion: 1
Driving Side Maximum Convex Angle: 5 °
Resisting Side Maximum Convex Angle: 1 °

Materials

Matl. 1 - Embankment Material

Model: Mohr-Coulomb
Unit Weight: 125 pcf
Cohesion': 0 psf
Phi': 32 °
Phi-B: 0 °
Constant Unit Wt. Above Water Table: 120 pcf

Matl. 2 - Surficial Overburden Layer

Model: Mohr-Coulomb
Unit Weight: 109 pcf
Cohesion': 0 psf
Phi': 29 °
Phi-B: 0 °
Constant Unit Wt. Above Water Table: 106 pcf

Matl. 3 - Shallow Alluvial Deposits

Model: Mohr-Coulomb
Unit Weight: 123 pcf
Cohesion': 0 psf
Phi': 30 °
Phi-B: 0 °

Matl. 4 - Deeper Marine Deposits

Model: Mohr-Coulomb
Unit Weight: 125 pcf
Cohesion': 0 psf
Phi': 33 °
Phi-B: 0 °

Slip Surface Grid

Upper Left: (-262.2639, 239.5947) ft
Lower Left: (-262.2639, 161.5108) ft
Lower Right: (-155.3967, 161.5108) ft
Grid Horizontal Increment: 25
Grid Vertical Increment: 25
Left Projection Angle: 0 °
Right Projection Angle: 0 °

Slip Surface Radius

Upper Left Coordinate: (-242.3029, 15.0347) ft
Upper Right Coordinate: (-111.4618, 15.2036) ft
Lower Left Coordinate: (-242.18, -24.4305) ft
Lower Right Coordinate: (-112.4134, -24.6416) ft
Number of Increments: 50
Left Projection: No
Left Projection Angle: 135 °
Right Projection: No
Right Projection Angle: 45 °

Slip Surface Limits

Left Coordinate: (-1,200, 15) ft
Right Coordinate: (1,200, 15) ft

Points

	X (ft)	Y (ft)
Point 1	-183	15

Point 2	-138	30
Point 3	-124	30
Point 4	-100	22
Point 5	-70.1	22
Point 6	-49	15
Point 7	49	15
Point 8	70	22
Point 9	100	22
Point 10	124	30
Point 11	138	30
Point 12	183	15
Point 13	-183	13.5
Point 14	-44.5	13.5
Point 15	-183	-14.5
Point 16	-44.5	-14.5
Point 17	-183	-114.5
Point 18	-44.5	-114.5
Point 19	44.5	-14.5
Point 20	44.5	13.5
Point 21	25	7
Point 22	-25	7
Point 23	44.5	-114.5
Point 24	183	13.5
Point 25	183	-14.5
Point 26	183	-114.5
Point 27	-64	19.9763
Point 28	64	20
Point 29	-174	18
Point 30	174	18
Point 31	1,200	15
Point 32	1,200	13.5
Point 33	1,200	-14.5
Point 34	1,200	-114.5
Point 35	-1,200	15
Point 36	-1,200	13.5
Point 37	-1,200	-14.5

Point 38	-1,200	-114.5
Point 39	-34.2	10.0667
Point 40	34.2	10.0667

Regions

	Material	Points	Area (ft²)
Region 1	Matl. 1 - Embankment Material	1,29,2,3,4,5,27,6	1,094.6
Region 2	Matl. 1 - Embankment Material	7,28,8,9,10,11,30,12	1,095
Region 3	Matl. 2 - Surficial Overburden Layer	1,13,14,6	204.38
Region 4	Matl. 3 - Shallow Alluvial Deposits	13,15,16,14	3,878
Region 5	Matl. 4 - Deeper Marine Deposits	15,17,18,16	13,850
Region 6	Matl. 3 - Shallow Alluvial Deposits	14,16,19,20,40,21,22,39	2,040.3
Region 7	Matl. 4 - Deeper Marine Deposits	16,19,23,18	8,900
Region 8	Matl. 2 - Surficial Overburden Layer	20,7,12,24	204.38
Region 9	Matl. 3 - Shallow Alluvial Deposits	20,24,25,19	3,878
Region 10	Matl. 4 - Deeper Marine Deposits	19,25,26,23	13,850
Region 11	Matl. 2 - Surficial Overburden Layer	12,31,32,24	1,525.5
Region 12	Matl. 3 - Shallow Alluvial Deposits	24,32,33,25	28,476
Region 13	Matl. 4 - Deeper Marine Deposits	25,33,34,26	1.017e+005
Region 14	Matl. 2 - Surficial Overburden Layer	35,1,13,36	1,525.5
Region 15	Matl. 3 - Shallow Alluvial Deposits	36,13,15,37	28,476
Region 16	Matl. 4 - Deeper Marine Deposits	37,15,17,38	1.017e+005

Current Slip Surface

Slip Surface: 34,477
F of S: 1.574
Volume: 24.362736 ft³
Weight: 3,001.6764 lbs
Resisting Moment: 196,546.24 lbs-ft
Activating Moment: 124,903.61 lbs-ft
Resisting Force: 1,065.5303 lbs
Activating Force: 677.16164 lbs
F of S Rank: 1
Exit: (-182.99593, 15.001356) ft
Entry: (-152.13457, 25.288477) ft
Radius: 15.228031 ft
Center: (-219.51702, 183.37429) ft

Slip Slices

	X (ft)	Y (ft)	PWP (psf)	Base Normal Stress (psf)	Frictional Strength (psf)	Cohesive Strength (psf)
Slice 1	-182.57992	15.047492	185.09958	196.82691	7.3280467	0
Slice 2	-181.74791	15.139764	180.94774	201.78615	13.021281	0
Slice 3	-180.74918	15.257725	175.07523	206.25957	19.486141	0
Slice 4	-179.58372	15.401375	167.59702	211.36457	27.349001	0
Slice 5	-178.41952	15.54625	159.94961	216.15417	35.120506	0
Slice 6	-177.25658	15.69235	152.18751	220.8962	42.933954	0
Slice 7	-176.22925	15.826372	145.14377	223.6956	49.084629	0
Slice 8	-175.33755	15.948317	138.75472	226.06019	54.554513	0
Slice 9	-174.44585	16.070261	132.58925	228.42162	59.882709	0
Slice 10	-173.64145	16.180267	127.15681	238.11459	69.334118	0
Slice 11	-172.74755	16.389825	115.41126	234.12089	74.178012	0
Slice 12	-171.67685	16.710875	97.392119	236.17235	86.71951	0
Slice 13	-170.6653	17.1101	74.631515	210.26533	84.753412	0
Slice 14	-169.7129	17.5875	47.20978	189.74581	89.066396	0
Slice 15	-168.79067	18.115075	16.433904	153.00364	85.338243	0
Slice 16	-167.89863	18.692825	-17.652546	123.74079	77.321825	0
Slice 17	-167.07465	19.216	-48.66393	102.04792	63.766618	0

Slice 18	-166.06585	19.80355	-83.569348	80.720972	50.440062	0
Slice 19	-164.89828	20.4334	-121.18068	58.822055	36.756099	0
Slice 20	-163.82483	20.9866	-154.33935	39.683521	24.797016	0
Slice 21	-162.89767	21.4338	-181.20075	27.140685	16.959382	0
Slice 22	-162.11683	21.775	-201.68497	18.914695	11.819213	0
Slice 23	-161.27883	22.113317	-221.98006	13.318279	8.3221842	0
Slice 24	-160.3837	22.44875	-242.07582	9.4345329	5.8953505	0
Slice 25	-159.48857	22.784183	-262.18466	5.550787	3.4685167	0
Slice 26	-158.49669	23.13605	-283.25203	3.3859919	2.1158026	0
Slice 27	-157.40806	23.50435	-305.27872	2.8069086	1.7539511	0
Slice 28	-156.31944	23.87265	-327.31909	2.2278252	1.3920997	0
Slice 29	-155.23081	24.24095	-349.37225	1.6487419	1.0302483	0
Slice 30	-154.05302	24.6376	-373.1342	1.217755	0.7609378	0
Slice 31	-152.78608	25.0626	-398.61268	0.93091003	0.58169715	0
Slice 32	-152.14359	25.281788	-411.76765	0.32642194	0.20397107	0

Slope Stability Int Slope G&R (LT SSS)

Report generated using GeoStudio 2012. Copyright © 1991-2013 GEO-SLOPE International Ltd.

File Information

Title: LOWP PIR Analysis Section B
Created By: Viessman, Michael W CIV USARMY CESAJ (US)
Last Edited By: Viessman, Michael W CIV USARMY CESAJ (US)
Revision Number: 561
File Version: 8.2
Tool Version: 8.12.3.7901
Date: 8/26/2018
Time: 10:17:52 PM
File Name: PR Outlet to C38.gsz
Directory: C:\Users\k3engmwv\Documents\LOWP\FY17-18 PIR Work\SEEP and SLOPEW Files\
Last Solved Date: 8/26/2018
Last Solved Time: 9:18:38 PM

Project Settings

Length(L) Units: feet
Time(t) Units: Seconds
Force(F) Units: lbf
Pressure(p) Units: psf
Strength Units: psf
Unit Weight of Water: 62.4 pcf
View: 2D
Element Thickness: 1

Analysis Settings

Slope Stability Int Slope G&R (LT SSS)

Description: PR at 18ft, canal at 20ft
Kind: SLOPE/W
Parent: Steady-State Seepage (LT SSS)
Method: Spencer
Settings
- Lambda
  - Lambda 1: -1
  - Lambda 2: -0.8
  - Lambda 3: -0.6
  - Lambda 4: -0.4
  - Lambda 5: -0.2
  - Lambda 6: 0

Lambda 7: 0.2
Lambda 8: 0.4
Lambda 9: 0.6
Lambda 10: 0.8
Lambda 11: 1
PWP Conditions Source: Parent Analysis
Slip Surface
Direction of movement: Left to Right
Use Passive Mode: No
Slip Surface Option: Grid and Radius
Critical slip surfaces saved: 1
Optimize Critical Slip Surface Location: Yes
Tension Crack
Tension Crack Option: (none)
F of S Distribution
F of S Calculation Option: Constant
Advanced
Number of Slices: 30
F of S Tolerance: 0.001
Minimum Slip Surface Depth: 1 ft
Optimization Maximum Iterations: 2,000
Optimization Convergence Tolerance: 1e-007
Starting Optimization Points: 8
Ending Optimization Points: 16
Complete Passes per Insertion: 1
Driving Side Maximum Convex Angle: 5 °
Resisting Side Maximum Convex Angle: 1 °

Materials

Matl. 1 - Embankment Material

Model: Mohr-Coulomb
Unit Weight: 125 pcf
Cohesion': 0 psf
Phi': 32 °
Phi-B: 0 °
Constant Unit Wt. Above Water Table: 120 pcf

Matl. 2 - Surficial Overburden Layer

Model: Mohr-Coulomb
Unit Weight: 109 pcf
Cohesion': 0 psf
Phi': 29 °
Phi-B: 0 °
Constant Unit Wt. Above Water Table: 106 pcf

Matl. 3 - Shallow Alluvial Deposits

Model: Mohr-Coulomb
Unit Weight: 123 pcf
Cohesion': 0 psf
Phi': 30 °
Phi-B: 0 °

Matl. 4 - Deeper Marine Deposits

Model: Mohr-Coulomb
Unit Weight: 125 pcf
Cohesion': 0 psf
Phi': 33 °
Phi-B: 0 °

Slip Surface Grid

Upper Left: (-63.4639, 97.2947) ft
Lower Left: (-63.4639, 19.2108) ft
Lower Right: (43.4033, 19.2108) ft
Grid Horizontal Increment: 25
Grid Vertical Increment: 25
Left Projection Angle: 0 °
Right Projection Angle: 0 °

Slip Surface Radius

Upper Left Coordinate: (-140.2029, 30.2347) ft
Upper Right Coordinate: (-9.3618, 30.4036) ft
Lower Left Coordinate: (-140.08, -9.2305) ft
Lower Right Coordinate: (-10.3134, -9.4416) ft
Number of Increments: 50
Left Projection: No
Left Projection Angle: 135 °
Right Projection: No
Right Projection Angle: 45 °

Slip Surface Limits

Left Coordinate: (-1,200, 15) ft
Right Coordinate: (1,200, 15) ft

Points

	X (ft)	Y (ft)
Point 1	-183	15

Point 2	-138	30
Point 3	-124	30
Point 4	-100	22
Point 5	-70.1	22
Point 6	-49	15
Point 7	49	15
Point 8	70	22
Point 9	100	22
Point 10	124	30
Point 11	138	30
Point 12	183	15
Point 13	-183	13.5
Point 14	-44.5	13.5
Point 15	-183	-14.5
Point 16	-44.5	-14.5
Point 17	-183	-114.5
Point 18	-44.5	-114.5
Point 19	44.5	-14.5
Point 20	44.5	13.5
Point 21	25	7
Point 22	-25	7
Point 23	44.5	-114.5
Point 24	183	13.5
Point 25	183	-14.5
Point 26	183	-114.5
Point 27	-64	19.9763
Point 28	64	20
Point 29	-174	18
Point 30	174	18
Point 31	1,200	15
Point 32	1,200	13.5
Point 33	1,200	-14.5
Point 34	1,200	-114.5
Point 35	-1,200	15
Point 36	-1,200	13.5
Point 37	-1,200	-14.5

Point 38	-1,200	-114.5
Point 39	-34.2	10.0667
Point 40	34.2	10.0667

Regions

	Material	Points	Area (ft²)
Region 1	Matl. 1 - Embankment Material	1,29,2,3,4,5,27,6	1,094.6
Region 2	Matl. 1 - Embankment Material	7,28,8,9,10,11,30,12	1,095
Region 3	Matl. 2 - Surficial Overburden Layer	1,13,14,6	204.38
Region 4	Matl. 3 - Shallow Alluvial Deposits	13,15,16,14	3,878
Region 5	Matl. 4 - Deeper Marine Deposits	15,17,18,16	13,850
Region 6	Matl. 3 - Shallow Alluvial Deposits	14,16,19,20,40,21,22,39	2,040.3
Region 7	Matl. 4 - Deeper Marine Deposits	16,19,23,18	8,900
Region 8	Matl. 2 - Surficial Overburden Layer	20,7,12,24	204.38
Region 9	Matl. 3 - Shallow Alluvial Deposits	20,24,25,19	3,878
Region 10	Matl. 4 - Deeper Marine Deposits	19,25,26,23	13,850
Region 11	Matl. 2 - Surficial Overburden Layer	12,31,32,24	1,525.5
Region 12	Matl. 3 - Shallow Alluvial Deposits	24,32,33,25	28,476
Region 13	Matl. 4 - Deeper Marine Deposits	25,33,34,26	1.017e+005
Region 14	Matl. 2 - Surficial Overburden Layer	35,1,13,36	1,525.5
Region 15	Matl. 3 - Shallow Alluvial Deposits	36,13,15,37	28,476
Region 16	Matl. 4 - Deeper Marine Deposits	37,15,17,38	1.017e+005

Current Slip Surface

Slip Surface: 21,808
F of S: 1.842
Volume: 14.554912 ft³
Weight: 1,786.8895 lbs
Resisting Moment: 31,716.471 lbs-ft
Activating Moment: 17,220.892 lbs-ft
Resisting Force: 479.11197 lbs
Activating Force: 260.31249 lbs
F of S Rank: 2
Exit: (-25.450021, 7.1500087) ft
Entry: (-46.456865, 14.152288) ft
Radius: 62.685055 ft
Center: (-16.442332, 69.184496) ft

Slip Slices

	X (ft)	Y (ft)	PWP (psf)	Base Normal Stress (psf)	Frictional Strength (psf)	Cohesive Strength (psf)
Slice 1	-46.149815	13.987033	374.83756	376.97182	1.18304	0
Slice 2	-45.535715	13.660889	394.38268	402.09313	4.2739715	0
Slice 3	-44.864333	13.314657	415.84086	430.81219	8.6437033	0
Slice 4	-44.156667	12.960078	437.93266	460.69558	13.142176	0
Slice 5	-43.47	12.626769	458.49825	487.06918	16.495432	0
Slice 6	-42.783333	12.303703	478.46836	512.32182	19.545301	0
Slice 7	-42.096667	11.990706	497.84906	536.46498	22.294914	0
Slice 8	-41.41	11.687613	516.63508	559.50822	24.75282	0
Slice 9	-40.723333	11.394269	534.83495	581.46226	26.920287	0
Slice 10	-40.036667	11.110525	552.45537	602.33699	28.799167	0
Slice 11	-39.35	10.836242	569.5017	622.14163	30.391677	0
Slice 12	-38.663333	10.571286	585.9858	640.88554	31.696378	0
Slice 13	-37.976667	10.315533	601.91351	658.57687	32.714608	0
Slice 14	-37.29	10.068861	617.29125	675.22336	33.447121	0
Slice 15	-36.603333	9.8311589	632.12318	690.83199	33.895549	0
Slice 16	-35.916667	9.6023183	646.41786	705.40971	34.058962	0
Slice 17	-35.23	9.3822377	660.18138	718.96272	33.937425	0

Slice 18	-34.543333	9.1708207	673.41908	731.49671	33.531133	0
Slice 19	-33.835418	8.9619699	686.51183	743.3411	32.810394	0
Slice 20	-33.106253	8.7561351	699.43413	754.4364	31.755578	0
Slice 21	-32.377088	8.5597689	711.78209	764.39922	30.378511	0
Slice 22	-31.647923	8.3727796	723.56201	773.23413	28.678213	0
Slice 23	-30.918758	8.1950809	734.77714	780.945	26.655024	0
Slice 24	-30.189593	8.0265917	745.43488	787.53539	24.30674	0
Slice 25	-29.460428	7.8672363	755.54247	793.00835	21.630936	0
Slice 26	-28.731263	7.7169435	765.10785	797.36637	18.624467	0
Slice 27	-28.002098	7.575647	774.13626	800.61127	15.285354	0
Slice 28	-27.272934	7.443285	782.63702	802.74451	11.609065	0
Slice 29	-26.543769	7.3198002	790.63531	803.76769	7.5819803	0
Slice 30	-25.814604	7.2051394	798.1669	803.68206	3.1841802	0

Slope Stability Int Slope G&R (RDD)

Report generated using GeoStudio 2012. Copyright © 1991-2013 GEO-SLOPE International Ltd.

File Information

Title: LOWP PIR Analysis Section B
Created By: Viessman, Michael W CIV USARMY CESAJ (US)
Last Edited By: Viessman, Michael W CIV USARMY CESAJ (US)
Revision Number: 569
File Version: 8.2
Tool Version: 8.12.3.7901
Date: 8/27/2018
Time: 12:08:43 PM
File Name: PR Outlet to C38.gsz
Directory: C:\Users\k3engmwv\Documents\LOWP\FY17-18 PIR Work\SEEP and SLOPEW Files\
Last Solved Date: 8/27/2018
Last Solved Time: 11:09:36 AM

Project Settings

Length(L) Units: feet
Time(t) Units: Seconds
Force(F) Units: lbf
Pressure(p) Units: psf
Strength Units: psf
Unit Weight of Water: 62.4 pcf
View: 2D
Element Thickness: 1

Analysis Settings

Slope Stability Int Slope G&R (RDD)

Description: RDD Canal to 18ft, PR at 18ft
Kind: SLOPE/W
Method: Spencer
Settings
Lambda
Lambda 1: -1
Lambda 2: -0.8
Lambda 3: -0.6
Lambda 4: -0.4
Lambda 5: -0.2
Lambda 6: 0
Lambda 7: 0.2

Lambda 8: 0.4
Lambda 9: 0.6
Lambda 10: 0.8
Lambda 11: 1
PWP Conditions Source: Piezometric Line
Apply Phreatic Correction: Yes
Use Staged Rapid Drawdown: Yes
Slip Surface
Direction of movement: Left to Right
Use Passive Mode: No
Slip Surface Option: Grid and Radius
Critical slip surfaces saved: 1
Optimize Critical Slip Surface Location: Yes
Tension Crack
Tension Crack Option: (none)
F of S Distribution
F of S Calculation Option: Constant
Advanced
Number of Slices: 30
F of S Tolerance: 0.001
Minimum Slip Surface Depth: 1 ft
Optimization Maximum Iterations: 2,000
Optimization Convergence Tolerance: 1e-007
Starting Optimization Points: 8
Ending Optimization Points: 16
Complete Passes per Insertion: 1
Driving Side Maximum Convex Angle: 5 °
Resisting Side Maximum Convex Angle: 1 °

Materials

Matl. 1 - Embankment Material

Model: Mohr-Coulomb
Unit Weight: 125 pcf
Cohesion': 0 psf
Phi': 32 °
Phi-B: 0 °
Total Cohesion: 420 psf
Total Phi: 0 °
Constant Unit Wt. Above Water Table: 120 pcf
Pore Water Pressure
Piezometric Line: 1
Piezometric Line After Drawdown: 2

Matl. 2 - Surficial Overburden Layer

Model: Mohr-Coulomb

Unit Weight: 109 pcf
Cohesion': 0 psf
Phi': 29 °
Phi-B: 0 °
Total Cohesion: 420 psf
Total Phi: 0 °
Constant Unit Wt. Above Water Table: 106 pcf
Pore Water Pressure
Piezometric Line: 1
Piezometric Line After Drawdown: 2

Matl. 3 - Shallow Alluvial Deposits

Model: Mohr-Coulomb
Unit Weight: 123 pcf
Cohesion': 0 psf
Phi': 30 °
Phi-B: 0 °
Total Cohesion: 420 psf
Total Phi: 0 °
Pore Water Pressure
Piezometric Line: 1
Piezometric Line After Drawdown: 2

Matl. 4 - Deeper Marine Deposits

Model: Mohr-Coulomb
Unit Weight: 125 pcf
Cohesion': 0 psf
Phi': 33 °
Phi-B: 0 °
Total Cohesion: 420 psf
Total Phi: 0 °
Pore Water Pressure
Piezometric Line: 1
Piezometric Line After Drawdown: 2

Slip Surface Grid

Upper Left: (-63.4639, 97.2947) ft
Lower Left: (-63.4639, 19.2108) ft
Lower Right: (43.4033, 19.2108) ft
Grid Horizontal Increment: 25
Grid Vertical Increment: 25
Left Projection Angle: 0 °
Right Projection Angle: 0 °

Slip Surface Radius

Upper Left Coordinate: (-140.2029, 30.2347) ft
Upper Right Coordinate: (-9.3618, 30.4036) ft
Lower Left Coordinate: (-140.08, -9.2305) ft
Lower Right Coordinate: (-10.3134, -9.4416) ft
Number of Increments: 50
Left Projection: No
Left Projection Angle: 135 °
Right Projection: No
Right Projection Angle: 45 °

Slip Surface Limits

Left Coordinate: (-1,200, 15) ft
Right Coordinate: (1,200, 15) ft

Piezometric Lines

Piezometric Line 1

Coordinates

	X (ft)	Y (ft)
Coordinate 1	-1,200	18
Coordinate 2	-174	18
Coordinate 3	-64	20
Coordinate 4	64	20
Coordinate 5	174	18
Coordinate 6	1,200	18

Piezometric Line 2

Coordinates

	X (ft)	Y (ft)
Coordinate 1	-1,200	18
Coordinate 2	-174	18
Coordinate 3	-58	18
Coordinate 4	58	18
Coordinate 5	174	18
Coordinate 6	1,200	18

Points

	X (ft)	Y (ft)
Point 1	-183	15
Point 2	-138	30
Point 3	-124	30
Point 4	-100	22
Point 5	-70.1	22
Point 6	-49	15
Point 7	49	15
Point 8	70	22
Point 9	100	22
Point 10	124	30
Point 11	138	30
Point 12	183	15
Point 13	-183	13.5
Point 14	-44.5	13.5
Point 15	-183	-14.5
Point 16	-44.5	-14.5
Point 17	-183	-114.5
Point 18	-44.5	-114.5
Point 19	44.5	-14.5
Point 20	44.5	13.5
Point 21	25	7
Point 22	-25	7
Point 23	44.5	-114.5
Point 24	183	13.5
Point 25	183	-14.5
Point 26	183	-114.5
Point 27	-64	19.9763
Point 28	64	20
Point 29	-174	18
Point 30	174	18
Point 31	1,200	15
Point 32	1,200	13.5
Point 33	1,200	-14.5

Point 34	1,200	-114.5
Point 35	-1,200	15
Point 36	-1,200	13.5
Point 37	-1,200	-14.5
Point 38	-1,200	-114.5
Point 39	-34.2	10.0667
Point 40	34.2	10.0667

Regions

	Material	Points	Area (ft²)
Region 1	Matl. 1 - Embankment Material	1,29,2,3,4,5,27,6	1,094.6
Region 2	Matl. 1 - Embankment Material	7,28,8,9,10,11,30,12	1,095
Region 3	Matl. 2 - Surficial Overburden Layer	1,13,14,6	204.38
Region 4	Matl. 3 - Shallow Alluvial Deposits	13,15,16,14	3,878
Region 5	Matl. 4 - Deeper Marine Deposits	15,17,18,16	13,850
Region 6	Matl. 3 - Shallow Alluvial Deposits	14,16,19,20,40,21,22,39	2,040.3
Region 7	Matl. 4 - Deeper Marine Deposits	16,19,23,18	8,900
Region 8	Matl. 2 - Surficial Overburden Layer	20,7,12,24	204.38
Region 9	Matl. 3 - Shallow Alluvial Deposits	20,24,25,19	3,878
Region 10	Matl. 4 - Deeper Marine Deposits	19,25,26,23	13,850
Region 11	Matl. 2 - Surficial Overburden Layer	12,31,32,24	1,525.5
Region 12	Matl. 3 - Shallow Alluvial Deposits	24,32,33,25	28,476
Region 13	Matl. 4 - Deeper Marine Deposits	25,33,34,26	1.017e+005
Region 14	Matl. 2 - Surficial Overburden Layer	35,1,13,36	1,525.5
Region 15	Matl. 3 - Shallow Alluvial Deposits	36,13,15,37	28,476
Region 16	Matl. 4 - Deeper Marine Deposits	37,15,17,38	1.017e+005

Current Slip Surface

Slip Surface: 34,477
F of S: 1.584
Volume: 52.72849 ft³
Weight: 6,314.11 lbs
Resisting Moment: 58,266.889 lbs-ft
Activating Moment: 36,778.815 lbs-ft
Resisting Force: 1,945.934 lbs
Activating Force: 1,229.161 lbs
F of S Rank: 1

Exit: (-42.517698, 12.839239) ft
Entry: (-69.49346, 21.798778) ft
Radius: 13.940562 ft
Center: (-50.639836, 41.074292) ft

Slip Slices

	X (ft)	Y (ft)	PWP (psf)	Base Normal Stress (psf)	Frictional Strength (psf)	Cohesive Strength (psf)
Slice 1	-69.22483	21.591889	-224.13387	10.40214	6.4999782	0
Slice 2	-68.6013	21.1153	-194.39472	34.361697	21.471572	0
Slice 3	-67.8915	20.5759	-160.73616	61.310593	38.311111	0
Slice 4	-67.300594	20.12524	-132.61498	83.660167	52.276675	0
Slice 5	-66.735944	19.69229	-105.5989	105.38063	65.849125	0
Slice 6	-66.03075	19.1439	-71.37936	132.11288	82.553287	0
Slice 7	-65.27765	18.5511	-34.38864	162.19571	101.35113	0
Slice 8	-64.735162	18.12735	-7.94664	185.01909	115.61276	0
Slice 9	-64.318476	17.807561	12.008213	204.01836	119.98126	0
Slice 10	-64.033863	17.589133	25.638119	218.24156	120.35199	0
Slice 11	-63.85625	17.452822	34.143906	227.11551	120.58204	0
Slice 12	-63.19525	17.00785	61.91016	264.22169	126.41828	0
Slice 13	-62.16075	16.33855	103.67448	303.45181	124.83473	0
Slice 14	-61.148875	15.756075	140.02092	349.30895	130.77768	0
Slice 15	-60.159625	15.260425	170.94948	371.44588	125.28406	0

Slice 16	-59.03495	14.83065	197.76744	405.41505	115.10095	0
Slice 17	-58.223882	14.616207	211.14867	410.92763	110.73929	0
Slice 18	-58.021432	14.579867	213.41628	407.41712	107.53642	0
Slice 19	-57.562925	14.497565	218.55193	407.38817	104.67364	0
Slice 20	-56.688775	14.340655	228.34312	407.33297	99.215692	0
Slice 21	-55.8252	14.196867	237.31552	409.1412	95.24453	0
Slice 22	-54.9722	14.0662	245.46912	406.61004	89.32187	0
Slice 23	-54.1192	13.935533	253.62272	404.07888	83.39921	0
Slice 24	-53.194425	13.813775	261.22044	403.46655	78.848308	0
Slice 25	-52.197875	13.700925	268.26228	396.0297	70.822639	0
Slice 26	-51.0399	13.60615	274.17624	388.80466	63.539569	0
Slice 27	-50.03515	13.562121	276.92362	377.17586	55.570723	0
Slice 28	-49.34505	13.550764	277.63231	364.18424	47.976519	0
Slice 29	-48.523225	13.537239	278.47627	351.37151	40.406488	0
Slice 30	-47.569675	13.521546	279.4555	338.64678	32.810262	0
Slice 31	-47.027032	13.50685	280.37256	326.19175	25.397992	0
Slice 32	-46.409224	13.4426	284.38176	324.99688	23.449148	0
Slice 33	-45.305341	13.3278	291.54528	322.9821	18.150053	0
Slice 34	-44.6267	13.245966	296.65175	318.25988	12.475462	0

Slice 35	-44.004425	13.125958	304.14021	321.64859	10.108469	0
Slice 36	-43.013274	12.934812	316.06772	326.14516	5.8182114	0

Filter Design

LOWP ANNEX B (GEOTECHNICAL): Filter Design

References:

- EM 1110-2-2300 dated 30 July 2004 (General Design and Construction Considerations for Earth and Rock-Fill Dams), Appendix B (Filter Design)
- ASTM C33/C33M 2016 (Standard Specification for Concrete Aggregates)

Fine Filter Design Steps:

1) The gradation curves from 9 different soil samples were examined to determine a "base-soil" that will require the smallest D_{15} size. These samples (jar) were obtained from SPT borings drilled for the Project. The gradation curve from boring CP17-CB-0043 (sample #4) was selected for the "base soil" and is shown on Figure 1.

2) As the base soil did not contain particles larger than the No. 4 sieve, an adjusted gradation curve did not need to be prepared per paragraph "B-2c" of Appendix B in EM 1110-2-2300.

3) Based on the particle size determination in Step 2, the base soil falls into a "Category 4 soil" – according to Table B-1 in EM 1110-2-2300.

4) Therefore, per Step 3, the maximum D_{15} will be as follows per Table B-2 in EM 1110-2-2300:

   $D_{15(max)} \leq 4$ to $5 \times d_{85}$
   Using the gradation band from boring CP17-CB-0043 (sample #4):
   $D_{15(max)} \leq (4x-0.27) = 1.08$mm to $(5x0.27) = 1.35$mm
   -- use 1.35mm for $D_{15(max)}$

5) Next, the minimum $D_{15} \geq 3$ to $5 \times d_{15\,(max)}$ – per paragraph "f" in Appendix B in EM 1110-2-2300.

   $D_{15(min)} = 3x0.075$mm = 0.22mmn to $5x0.075$mm = 0.37mm
   -- use 0.22mm for $D_{15(min)}$ per paragraph "f".

6) Per paragraph "g" of Appendix B in EM 1110-2-2300, the maximum particle size must be less than or equal to 75mm and the maximum percentage passing the No. 200 sieve must be less than or equal to 5 percent – OK.

7) Considering standard ASTM C33 gradations, a C33 fine aggregate (sand) was selected for the fine filter. This fine aggregate meets the filter criteria discussed above and also falls within the D10 and D90 limits for preventing segregation per Table B-3 of EM 1110-2-2300.

8) The next check is for permeability per paragraph B-3 in EM 1110-2-2300.

((15% size of filter material)/(15% size of protected soil)) ≥ 3 to 5
0.22mm/.075mm = 2.93, therefore OK.

Fine Filter Design Recommendations –

Fine Filter gradation: ASTM C33 fine aggregate (sand)
Fine Filter aggregate type: non-calcareous (to prevent dissolution/cementation of the filter material with time)

Coarse Filter Design Steps:

1) The fine aggregate selected in the previous design steps now becomes the "base soil" for the design of the coarse filter.

2) As the "minimum" gradation curve for the fine aggregate contains no material that could be retained on the No. 4 (4.75mm) sieve (and will also be used to determine D_{15} of the coarse filter material), an adjusted gradation curve was not prepared for the fine aggregate "maximum" gradation curve.

3) Based on the particle size determination from Step 2, the C33 fine aggregate falls into a "Category 4 soil" – according to Table B-1 in EM 1110-2-2300.

4) Therefore, per Step 3, the maximum D_{15} will be as follows per Table B-2 in EM 1110-2-2300:

   $D_{15(max)} \leq 4$ to $5 \times d_{85}$
   Using the minimum gradation band from the fine aggregate:
   $D_{15(max)} \leq 4*1.18mm = 4.72mm$ to $5*1.18mm = 5.9mm$ → use 5.9mm for $D_{15(max)}$

5) Next, the minimum $D_{15} \geq 3$ to $5 \times d_{15\,(max)}$ – per paragraph "f" of Appendix B in EM 1110-2-2300.

   $D_{15(min)} = 3x0.22mm = 0.66mm$ to $5x0.22mm = 1.10mm$
   Use 0.66mm for $D_{15(min)}$

6) Per paragraph "g" of Appendix B in EM 1110-2-2300, the maximum particle size must be less than or equal to 75mm and the maximum percentage passing the No. 200 sieve must be less than or equal to 5 percent – OK.

7) One coarse aggregate that will meet the filter criteria discussed above is a No. 89 stone per ASTM C33/C33M. The gradation band for this material is shown on Figure 2. This gradation also falls within the D10 and D90 limits for preventing segregation per Table B-3 of EM 1110-2-2300.

8) The next check is for permeability per paragraph B-3 in EM 1110-2-2300.

   ((15% size of filter material)/(15% size of protected soil)) ≥ 3 to 5
   1.6mm/0.22mm = 7.2, therefore OK.

Coarse Filter Design Recommendations –

Coarse Filter gradation: ASTM C33 No. 89 Stone
Coarse Filter aggregate type: non-calcareous (to prevent dissolution/cementation of the filter material with time)

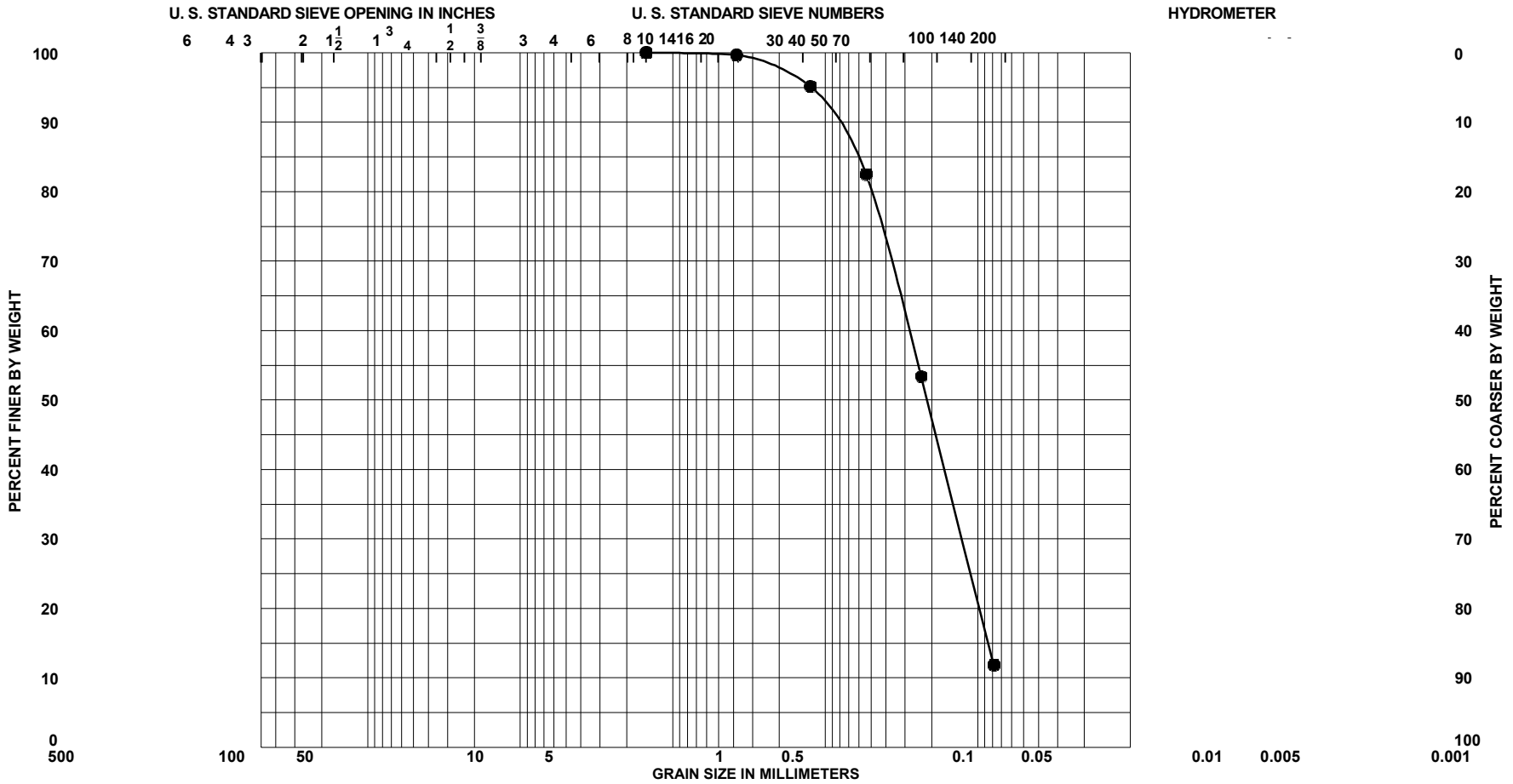

Sample No.	Depth	Classification	Munsell	Visual % Shell (est)	%CO	G_s	Org %	w_n	LL	PL	PI
● 4	4.5 to 6.0 Ft.	SAND, poorly-graded with silt, mostly fine-grained sand-sized quartz, few silt, light yellowish brown (SP-SM)	2.5Y 6/4					20.9			

GRADATION CURVES

PROJECT	Lake Okeechobee Watershed Restoration Project
BORING NO.	CP17-CB-0043
BORING ELEV.	Not Determined
DATE	1/3/2018

SAJ FORM 2087
JUN 02

Figure 1

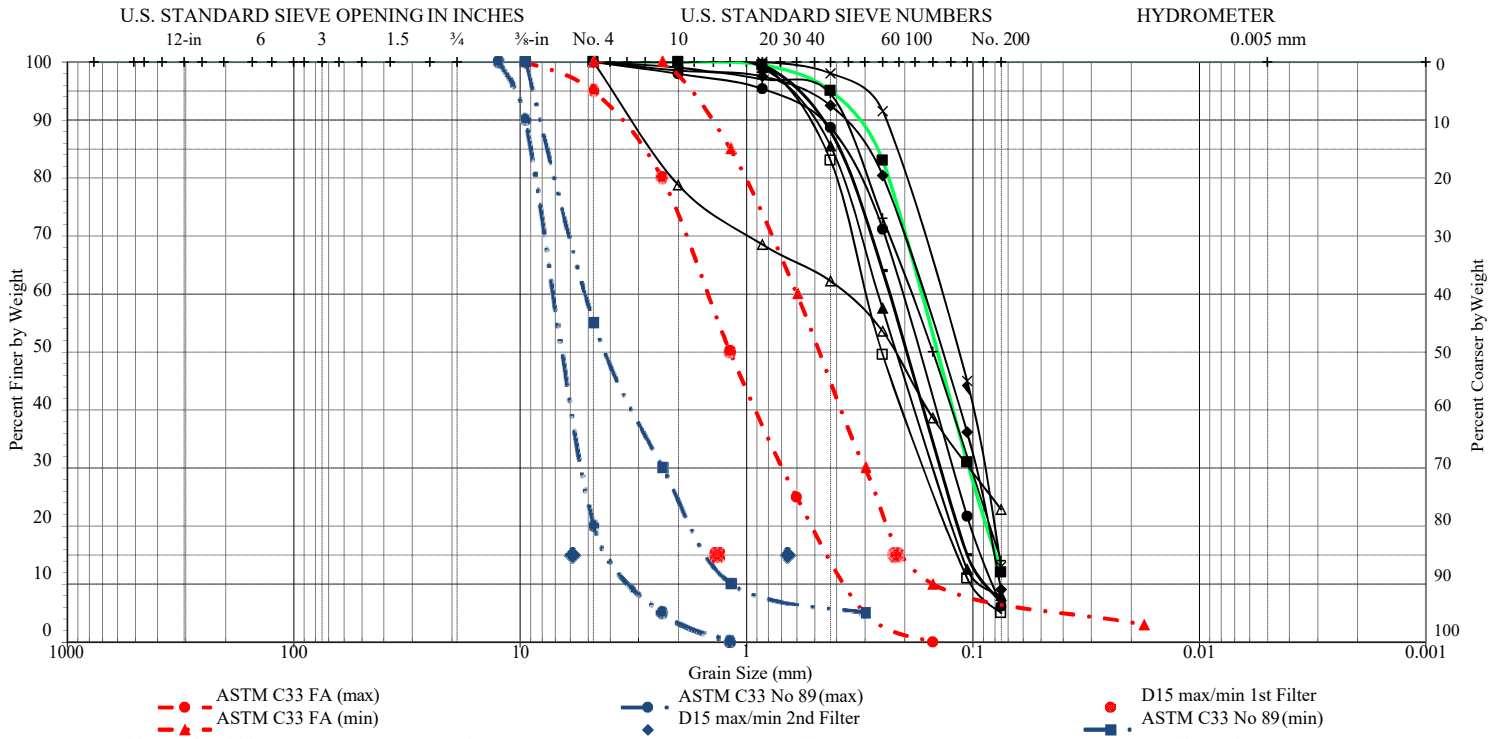

Boulders and Cobbles		Gravel		Sand			Silt or Clay	
Boulder	Cobble	Coarse	Fine	Coarse	Medium	Fine	Silt?	Clay?

Sample No.	Depth (ft)	Classification	Nat w%	LL	PL	PI
● 14 CB-0042	19.5-21.0'	(SP-SM)	32.5			
■ 4 CB-0043	4.5-6.0'	(SP-SM)	20.9			
▲ 8 CB-0043	10.5-12.0'	(SP-SM)	22.3			
⊡ 12 CB-0043	16.5-18.0'	(SP-SM)	23.2			
♦ 10 CB-0044	12.0-13.5'	(SP-SM)	29.8			
– 8 CB-0045	10.5-12.0'	(SP-SM)	26.7			
x 9 CB-0042	12.0-13.5'	(SM)	26.4			
Δ 5 CB-0044	4.5-6.0'	(SM)	24.7			
+ 2 CB-0048	1.5-3.0'	(SM)	11.6			

Project	LOWP - K05 Proposed Reservoir Site
	Filter Design
Boring No.	See Sample No.
Location	Project Limits
Date	9/7/2018

*Filter Bands as per EM 2300 Appendix B

US Army Corps of Engineers

Particle Size Distribution Analysis

Figure 2

ANNEX C-1

PLATES

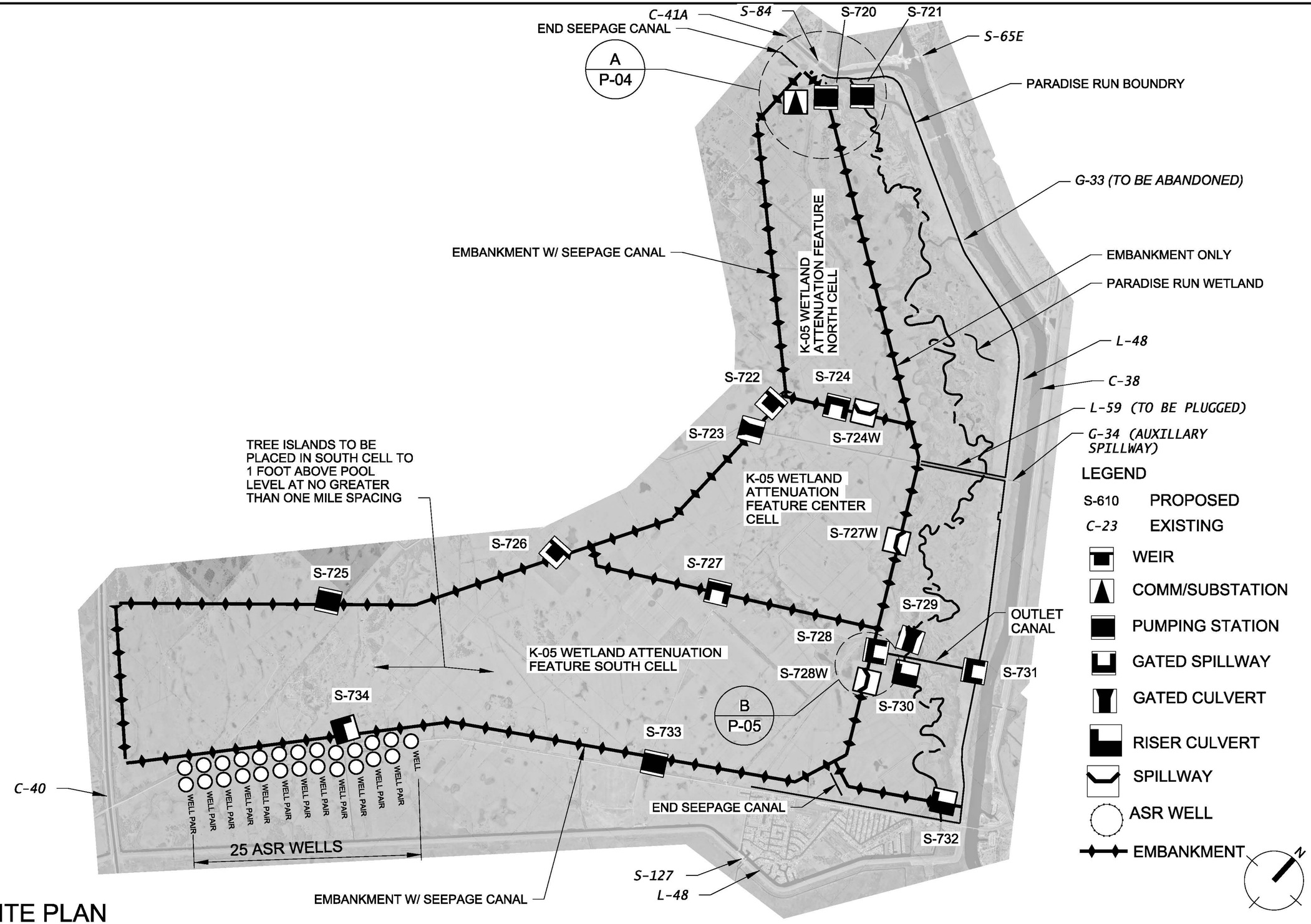

SITE PLAN

SCALE: 1"=5,000'

US Army Corps of Engineers

U.S. ARMY CORPS OF ENGINEERS
JACKSONVILLE DISTRICT
JACKSONVILLE, FLORIDA

CENTRAL AND SOUTH FLORIDA PROJECT
COMPREHENSIVE EVERGLADES RESTORATION PROJECT
LAKE OKEECHOBEE WATERSHED PROJECT
PROJECT SITE PLAN

PLATE NO.
P-01

CREST ELEVATION	
CELL	C1
NORTH	37.5
CENTER	35.0
SOUTH	29.0

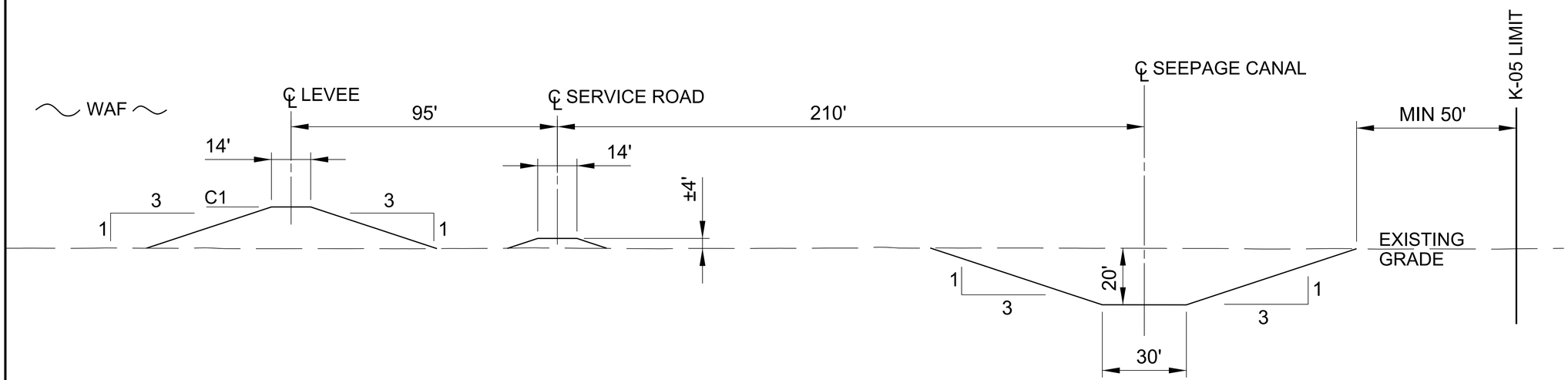

TYPICAL K-05 PERIMETER CROSS SECTION

SCALE: 1"=50'

0 50' 100'

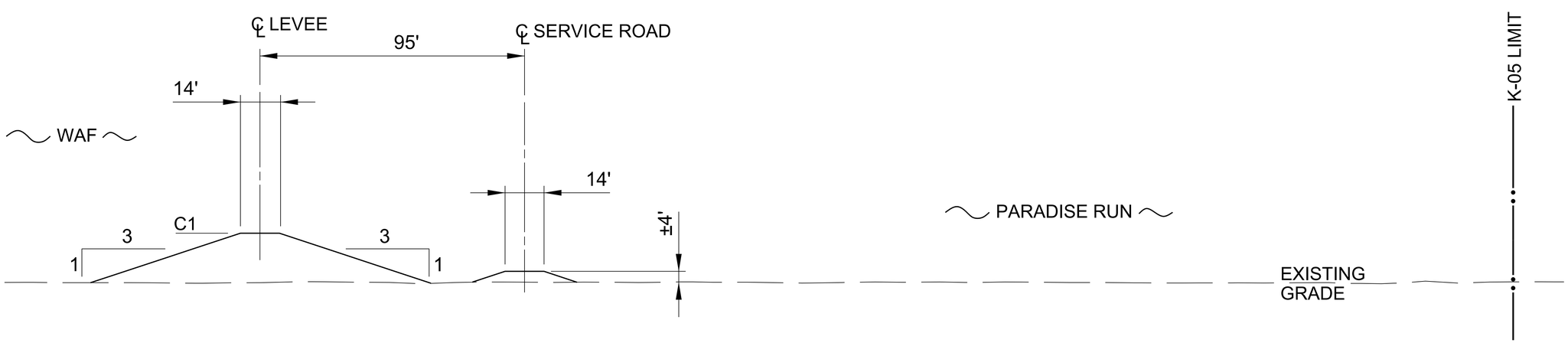

TYPICAL K-05 AND PARADISE RUN CROSS SECTION

SCALE: 1"=50'

0 50' 100'

US Army Corps of Engineers

U.S. ARMY CORPS OF ENGINEERS
JACKSONVILLE DISTRICT
JACKSONVILLE, FLORIDA

CENTRAL AND SOUTH FLORIDA PROJECT
COMPREHENSIVE EVERGLADES RESTORATION PROJECT
LAKE OKEECHOBEE WATERSHED PROJECT
TYPICAL K-05 SECTIONS

PLATE NO.
P-02

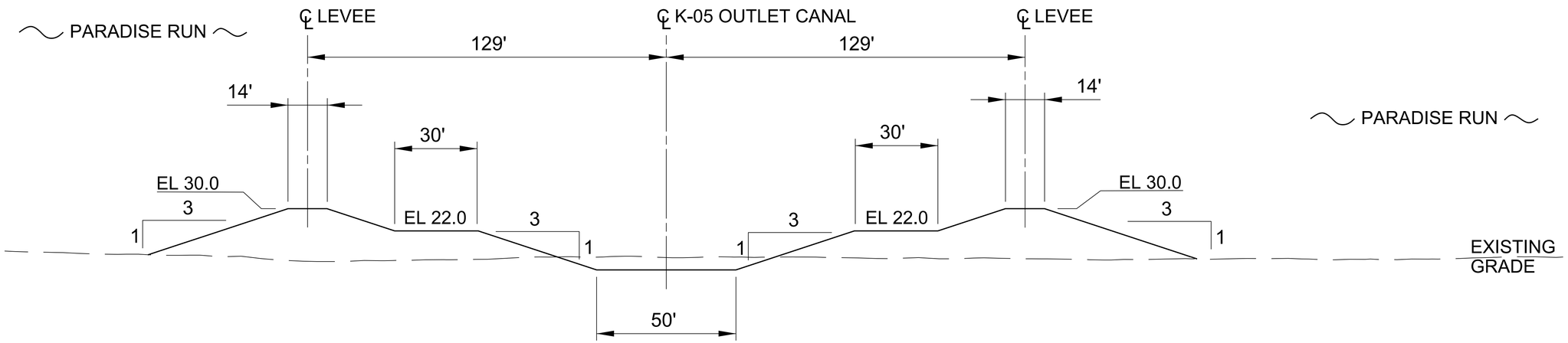

TYPICAL K-05 OUTLET CANAL CROSS SECTION

SCALE: 1"=50'

0 50' 100'

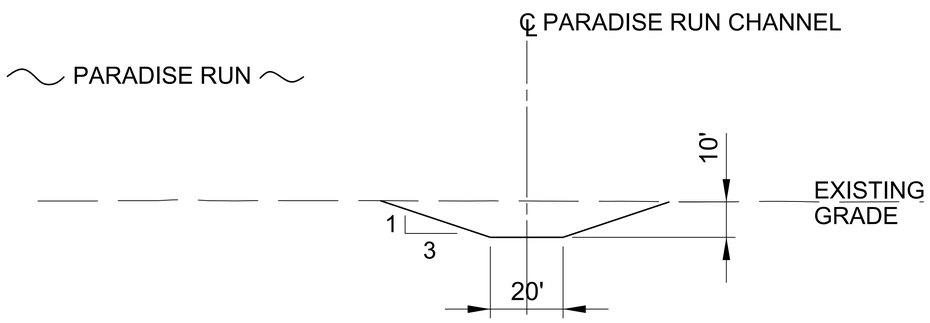

TYPICAL PARADISE RUN CHANNEL CROSS SECTION

SCALE: 1"=50'

0 50' 100'

US Army Corps of Engineers

U.S. ARMY CORPS OF ENGINEERS
JACKSONVILLE DISTRICT
JACKSONVILLE, FLORIDA

CENTRAL AND SOUTH FLORIDA PROJECT
COMPREHENSIVE EVERGLADES RESTORATION PROJECT
LAKE OKEECHOBEE WATERSHED PROJECT
TYPICAL K-05 SECTIONS

PLATE NO.

P-03

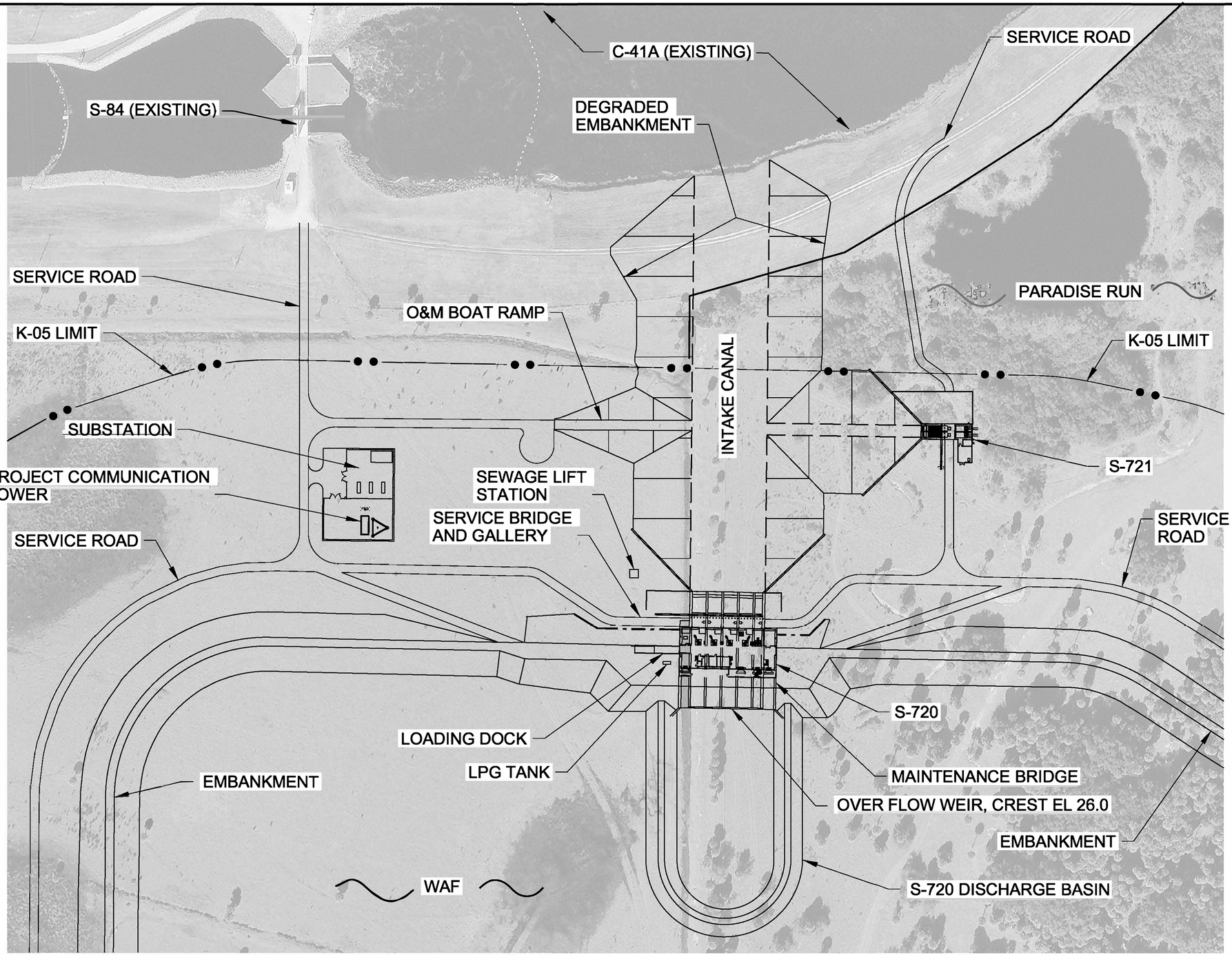

A
P-01

ENLARGED PLAN - PUMP STATION COMPLEX

SCALE: 1"=200'

N

0 200' 400'

US Army Corps of Engineers

U.S. ARMY CORPS OF ENGINEERS
JACKSONVILLE DISTRICT
JACKSONVILLE, FLORIDA

CENTRAL AND SOUTH FLORIDA PROJECT
COMPREHENSIVE EVERGLADES RESTORATION PROJECT
LAKE OKEECHOBEE WATERSHED PROJECT
S-720 AND S-721 PUMPING STATIONS

PLATE NO.
P-04

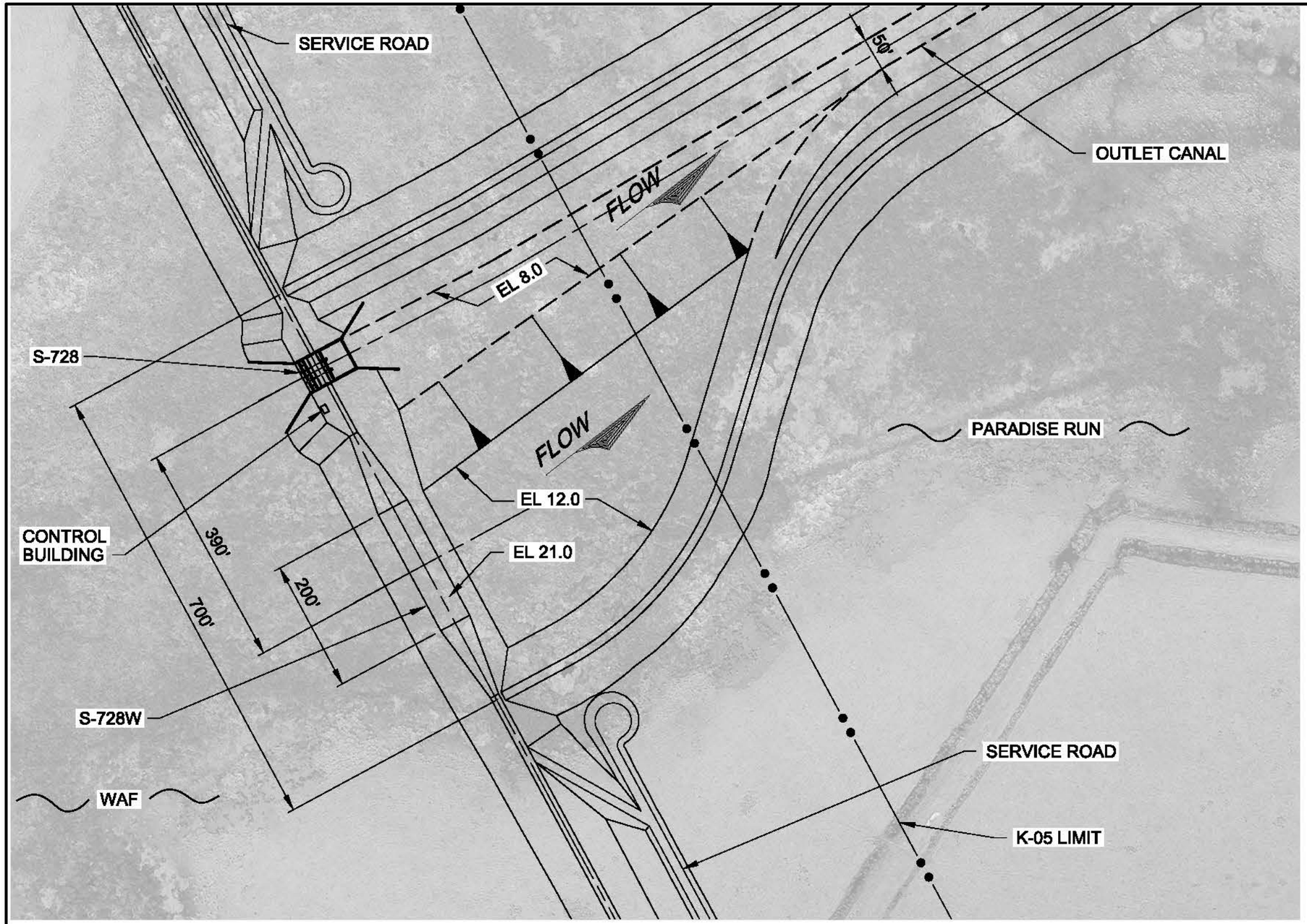

B
P-01

ENLARGED PLAN - S-728 SPILLWAY COMPLEX

SCALE: 1"=200'

N

0 200' 400'

US Army Corps of Engineers

U.S. ARMY CORPS OF ENGINEERS
JACKSONVILLE DISTRICT
JACKSONVILLE, FLORIDA

CENTRAL AND SOUTH FLORIDA PROJECT
COMPREHENSIVE EVERGLADES RESTORATION PROJECT
LAKE OKEECHOBEE WATERSHED PROJECT
S-728 AND S-728W SPILLWAYS

PLATE NO.
P-05

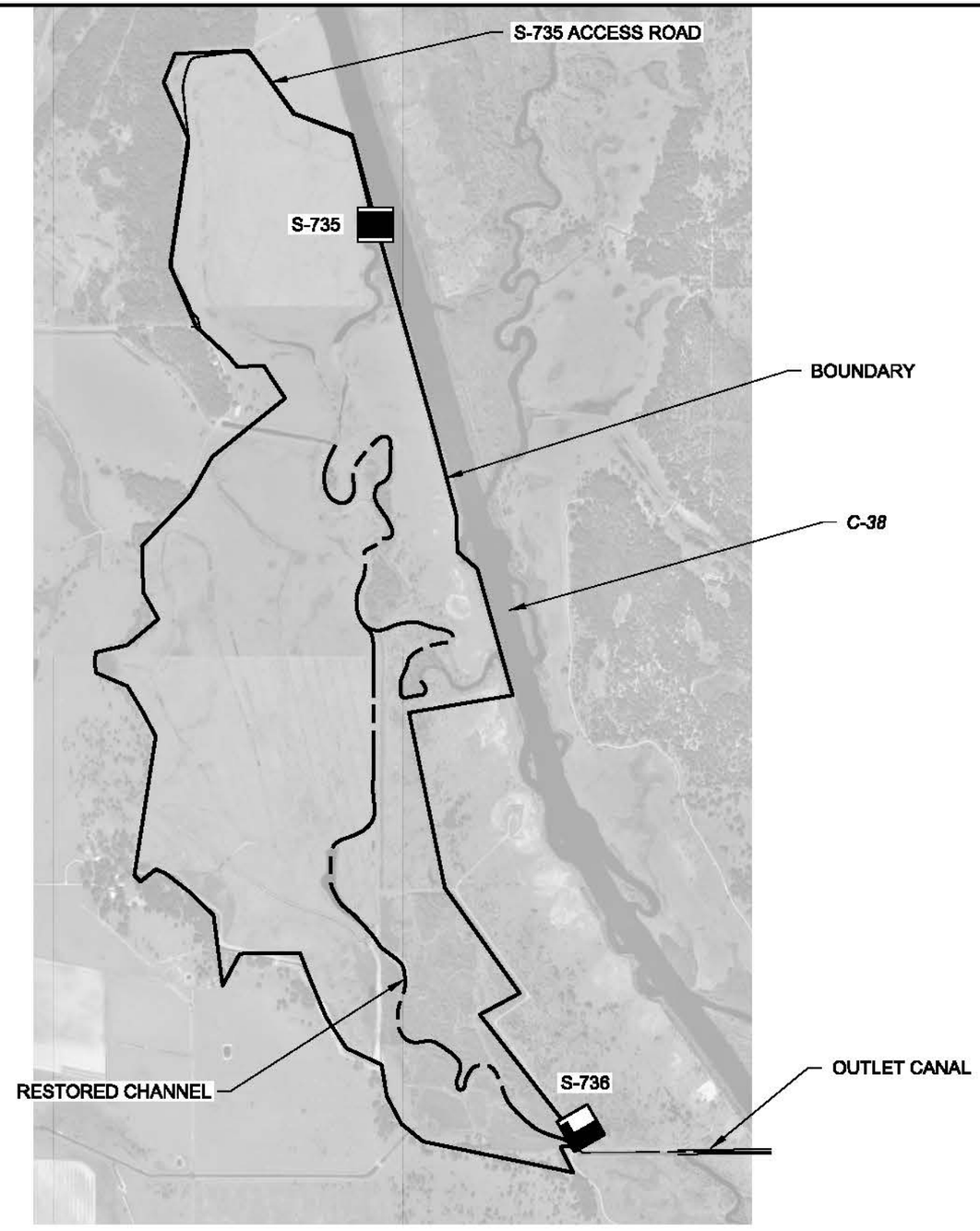

LEGEND:

PUMPING STATION

RISER CULVERT

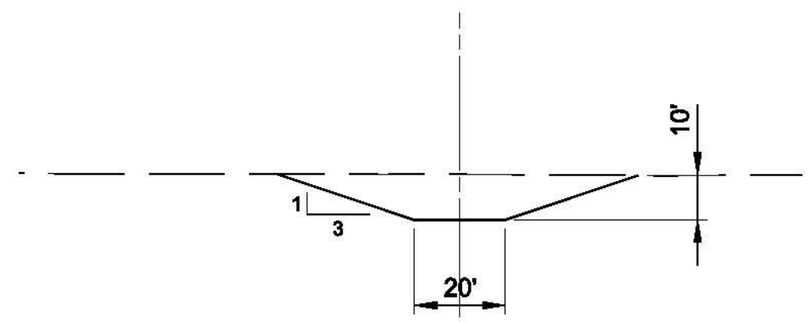

N

KISSIMMEE RIVER CENTER WETLAND SITE PLAN

SCALE: 1"=2,000'

0 2000' 4000'

TYPICAL KISSIMMEE RIVER CENTER CHANNEL CROSS SECTION

SCALE: NTS

US Army Corps of Engineers

U.S. ARMY CORPS OF ENGINEERS
JACKSONVILLE DISTRICT
JACKSONVILLE, FLORIDA

CENTRAL AND SOUTH FLORIDA PROJECT
COMPREHENSIVE EVERGLADES RESTORATION PROJECT
LAKE OKEECHOBEE WATERSHED PROJECT
KISSIMMEE RIVER CENTER WETLAND
SITE PLAN

PLATE NO.

P-06

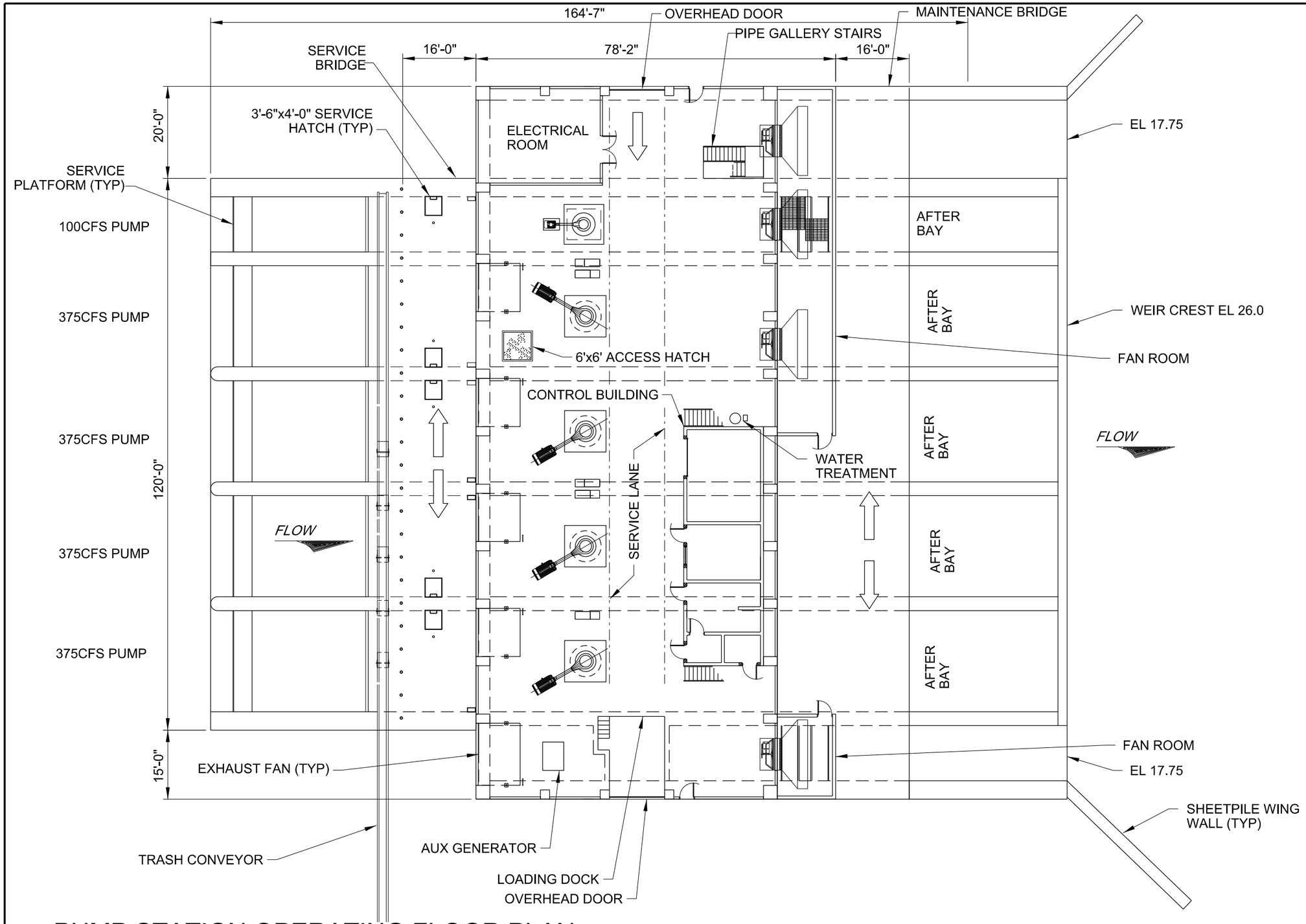

PUMP STATION OPERATING FLOOR PLAN

SCALE: 3/64"=1'-0"

0 16' 32' 64'

US Army Corps of Engineers

U.S. ARMY CORPS OF ENGINEERS
JACKSONVILLE DISTRICT
JACKSONVILLE, FLORIDA

CENTRAL AND SOUTH FLORIDA PROJECT
COMPREHENSIVE EVERGLADES RESTORATION PROJECT
LAKE OKEECHOBEE WATERSHED PROJECT

S-720 PUMP STATION

PLATE NO.

P-07

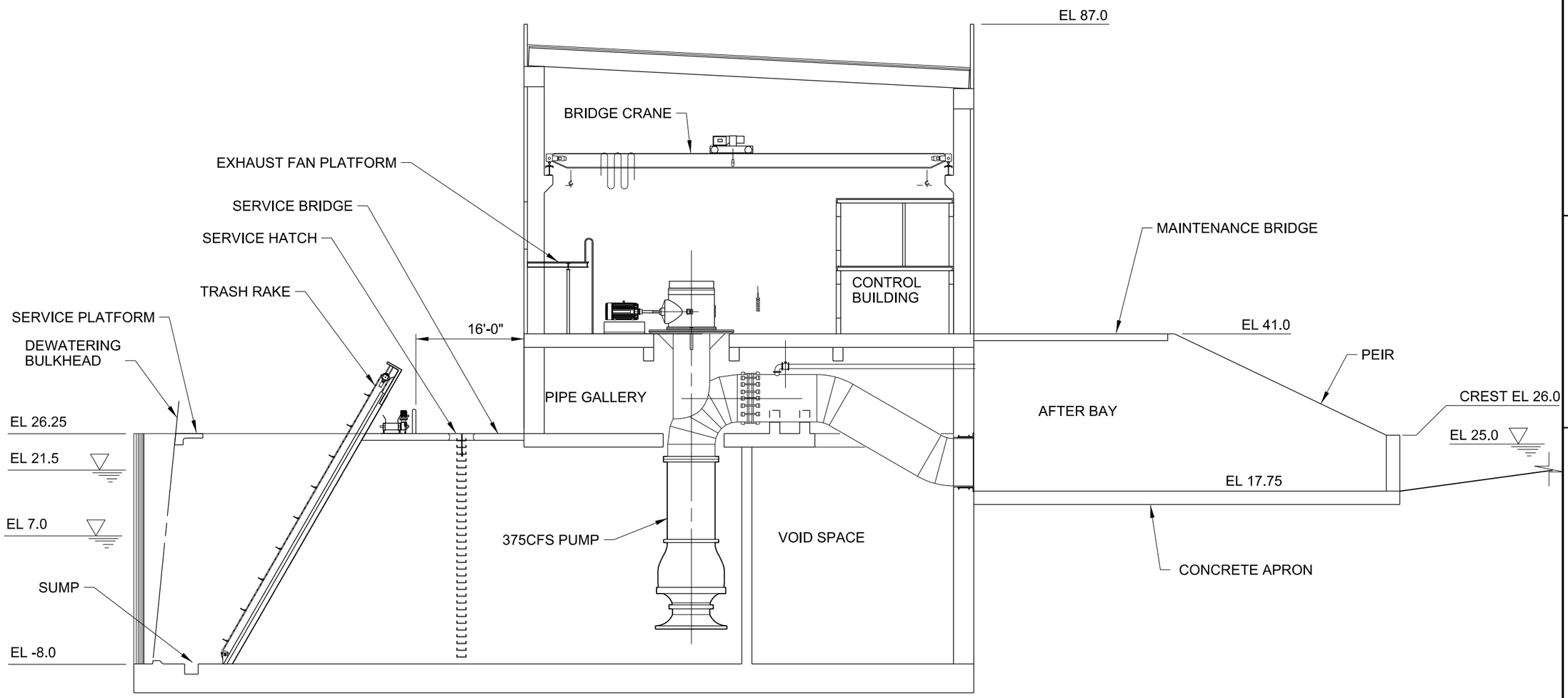

PUMP STATION SECTION - 375cfs PUMP

SCALE: 1/16"=1'-0"

0 8' 16' 32'

US Army Corps of Engineers

U.S. ARMY CORPS OF ENGINEERS
JACKSONVILLE DISTRICT
JACKSONVILLE, FLORIDA

CENTRAL AND SOUTH FLORIDA PROJECT
COMPREHENSIVE EVERGLADES RESTORATION PROJECT

LAKE OKEECHOBEE WATERSHED PROJECT

S-720 PUMP STATION

PLATE NO.

P-08

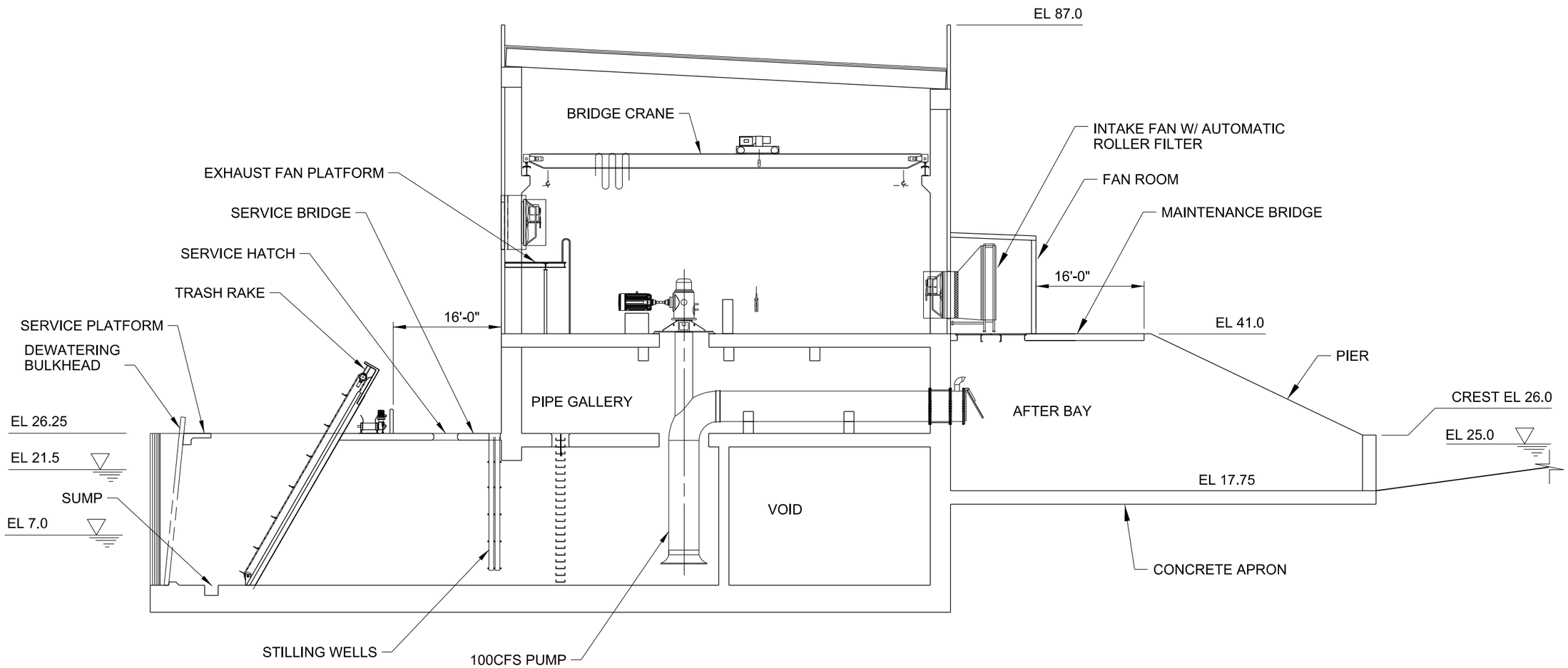

PUMP STATION SECTION - 100cfs PUMP

SCALE: 1/16"=1'-0"

0 8' 16' 32'

US Army Corps of Engineers

U.S. ARMY CORPS OF ENGINEERS
JACKSONVILLE DISTRICT
JACKSONVILLE, FLORIDA

CENTRAL AND SOUTH FLORIDA PROJECT
COMPREHENSIVE EVERGLADES RESTORATION PROJECT
LAKE OKEECHOBEE WATERSHED PROJECT
S-720 PUMP STATION

PLATE NO.

P-09

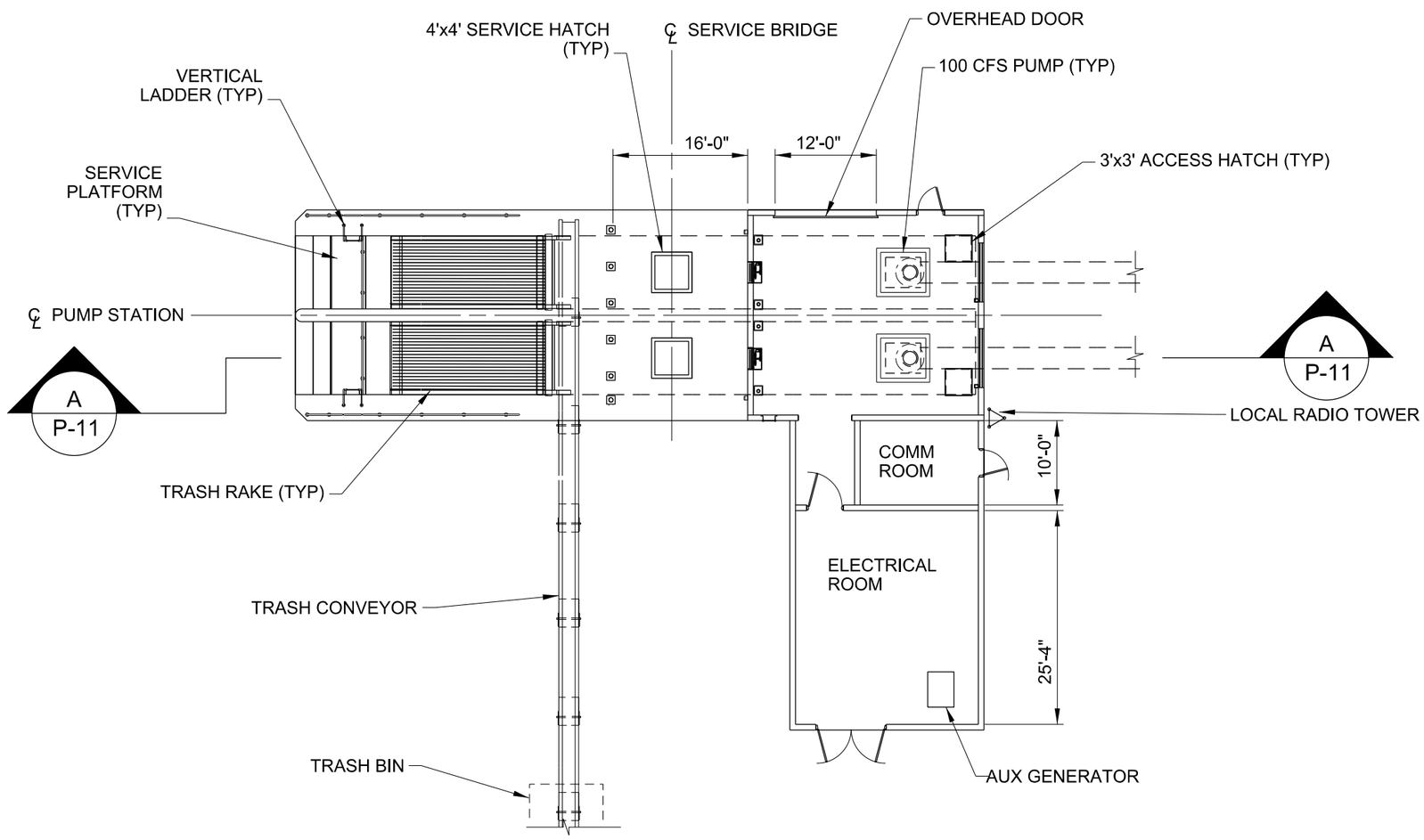

PUMP STATION OPERATING FLOOR PLAN

SCALE: 1/16"=1'-0"

0 8' 16' 32'

US Army Corps of Engineers

U.S. ARMY CORPS OF ENGINEERS
JACKSONVILLE DISTRICT
JACKSONVILLE, FLORIDA

CENTRAL AND SOUTH FLORIDA PROJECT
COMPREHENSIVE EVERGLADES RESTORATION PROJECT
LAKE OKEECHOBEE WATERSHED PROJECT
S-721 PUMP STATION

PLATE NO.
P-10

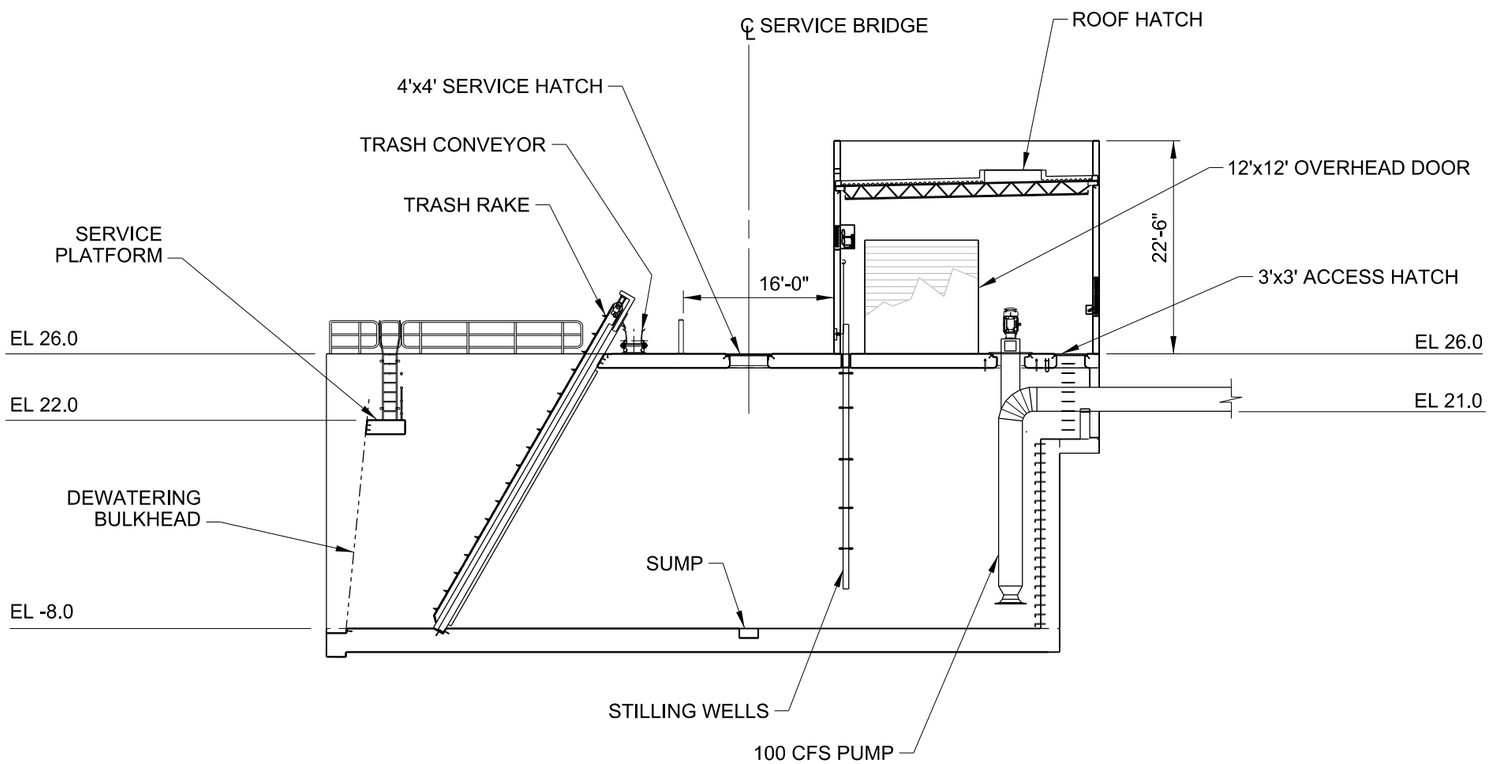

A
P-10

PUMP STATION SECTION

SCALE: 1/16"=1'-0"

0 8' 16' 32'

US Army Corps of Engineers

U.S. ARMY CORPS OF ENGINEERS
JACKSONVILLE DISTRICT
JACKSONVILLE, FLORIDA

CENTRAL AND SOUTH FLORIDA PROJECT
COMPREHENSIVE EVERGLADES RESTORATION PROJECT
LAKE OKEECHOBEE WATERSHED PROJECT

S-721 PUMP STATION

PLATE NO.

P-11

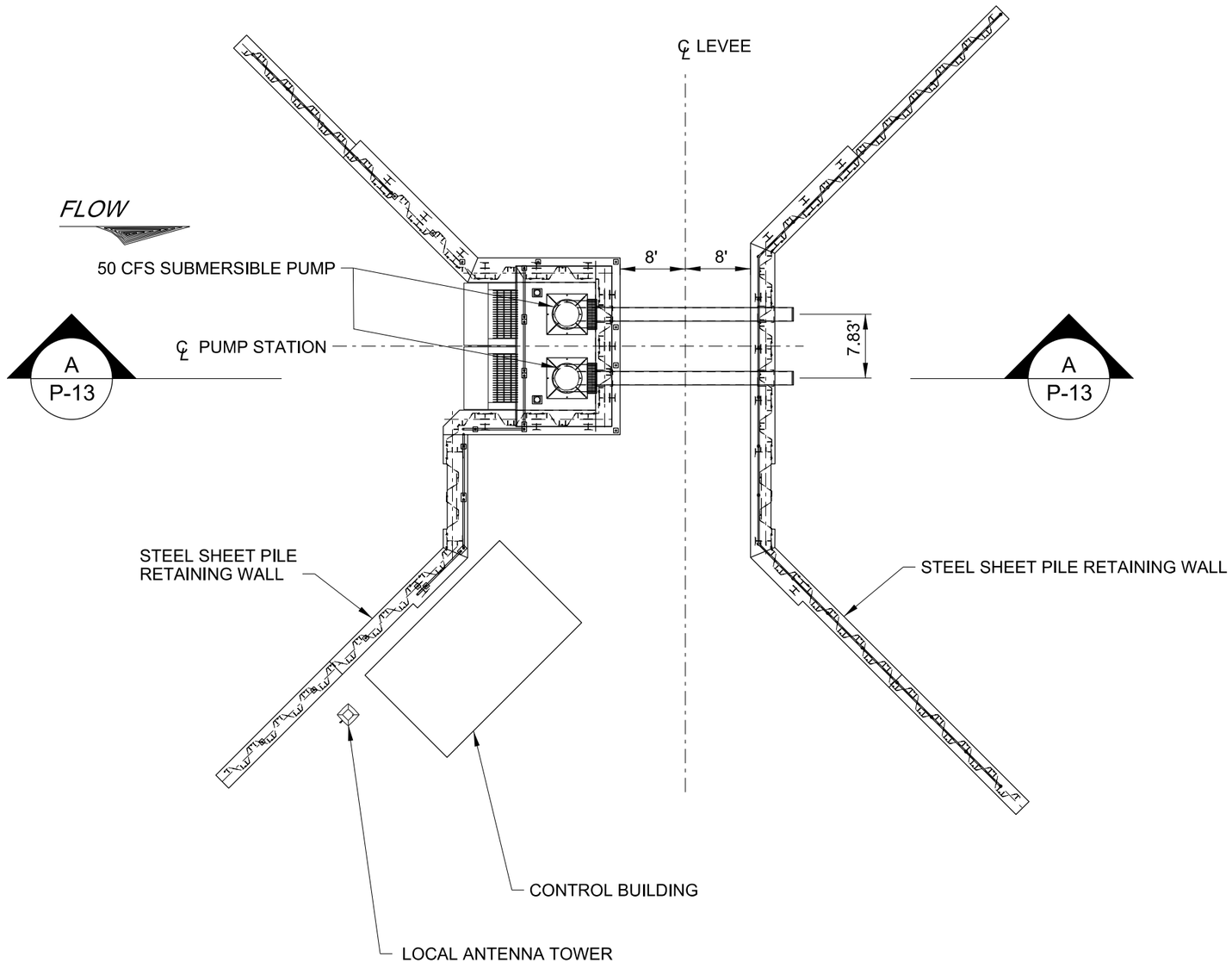

SEEPAGE PUMP STATION OPERATING FLOOR PLAN

SCALE: 1/16"=1'-0"

0 8' 16' 32'

US Army Corps of Engineers

U.S. ARMY CORPS OF ENGINEERS
JACKSONVILLE DISTRICT
JACKSONVILLE, FLORIDA

CENTRAL AND SOUTH FLORIDA PROJECT
COMPREHENSIVE EVERGLADES RESTORATION PROJECT
LAKE OKEECHOBEE WATERSHED PROJECT
S725, S-733, S-735 PUMP STATIONS

PLATE NO.

P-12

STRUCTURE DATA			
STRUCTURE	ELEVATION		
	C1	V1	V2
S-725	31.0	-2.0	21.0
S-733	31.0	-2.0	21.0
S-735	25.0	2.0	20.0

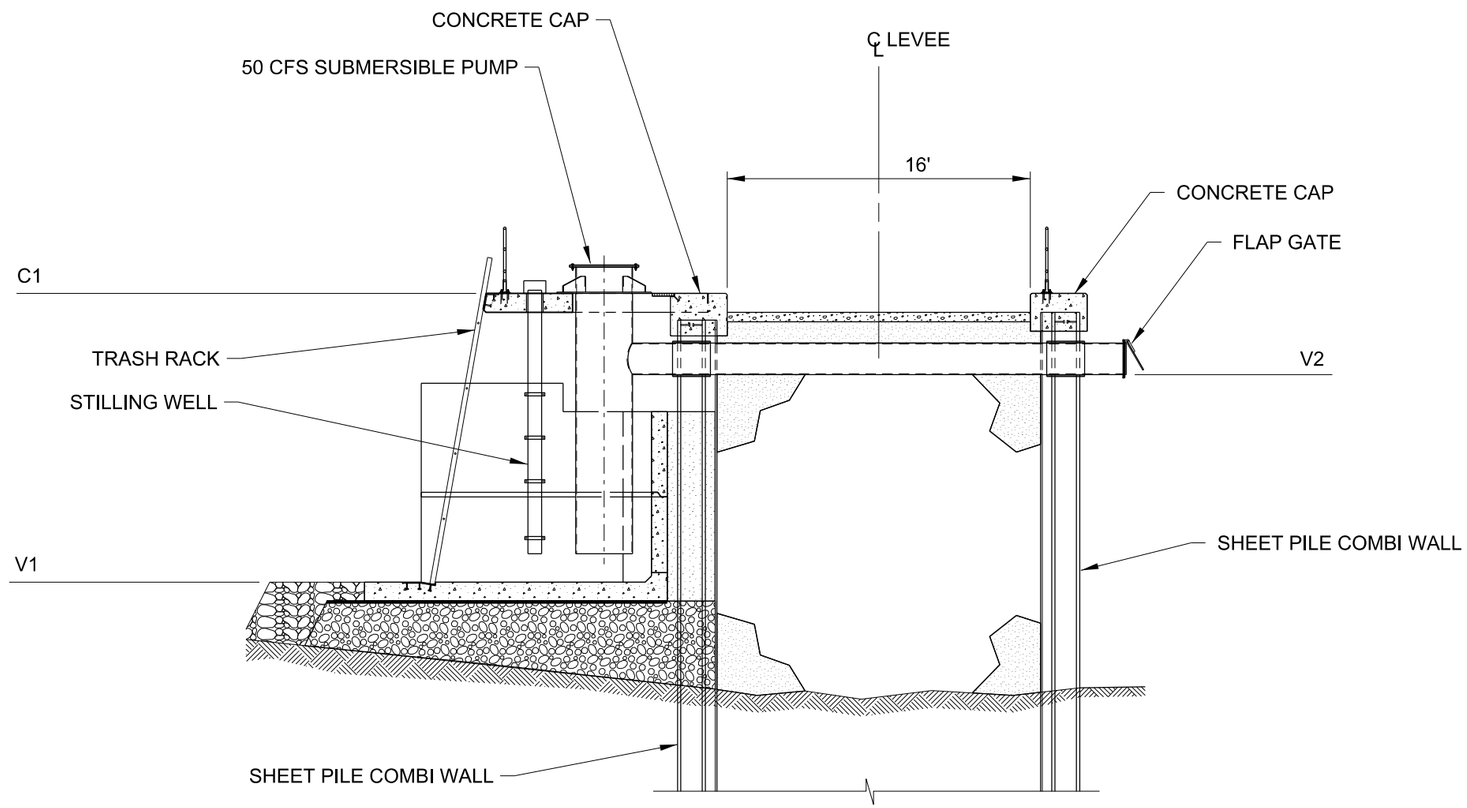

A
P-12

PUMP STATION SECTION

SCALE: 1/8"=1'-0"

0 4' 8' 16'

US Army Corps of Engineers

U.S. ARMY CORPS OF ENGINEERS
JACKSONVILLE DISTRICT
JACKSONVILLE, FLORIDA

CENTRAL AND SOUTH FLORIDA PROJECT
COMPREHENSIVE EVERGLADES RESTORATION PROJECT
LAKE OKEECHOBEE WATERSHED PROJECT
S-725, S-733, S-735 PUMP STATIONS

PLATE NO.
P-13

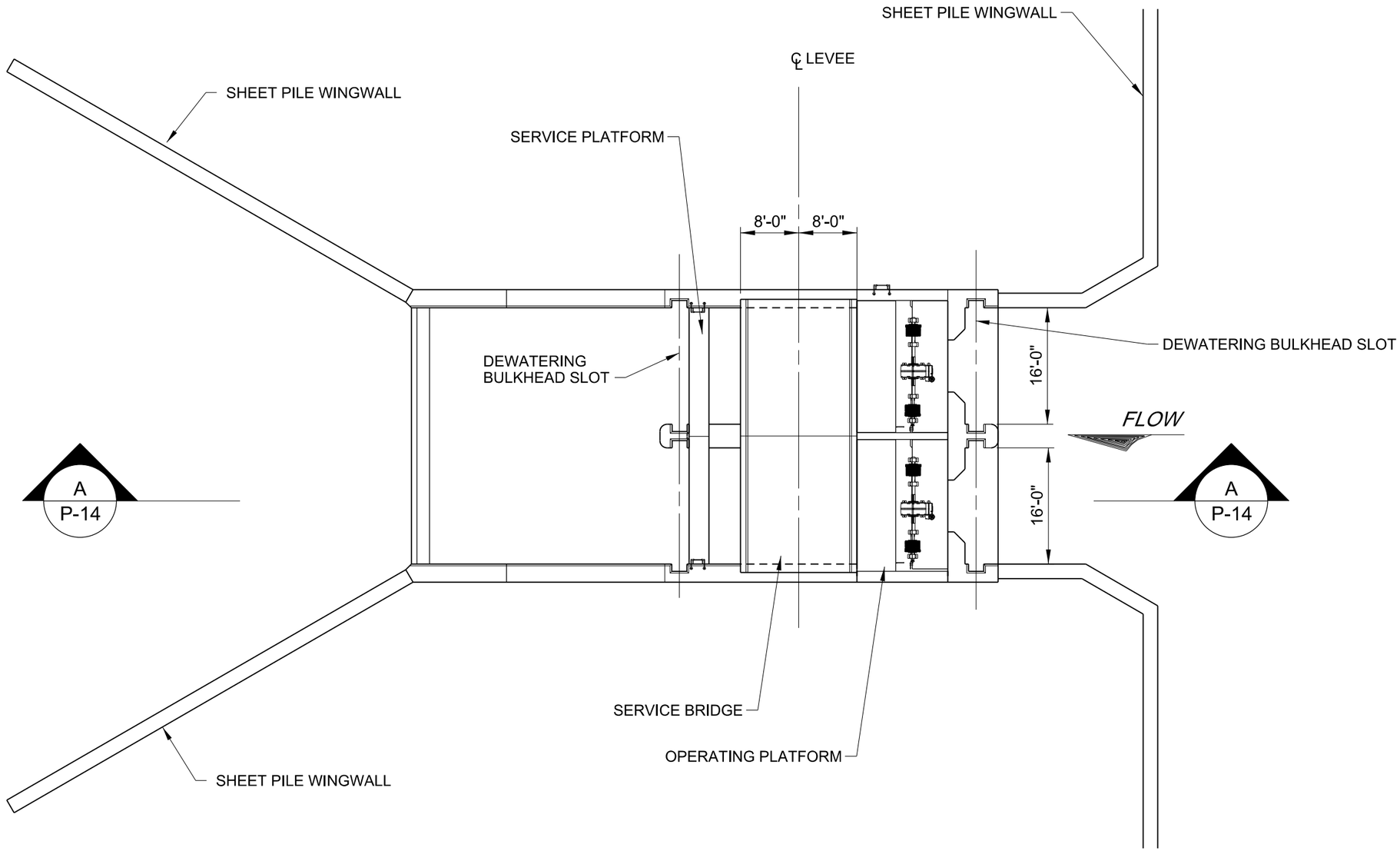

WAF CELL SPILLWAY - PLAN

SCALE: 1/16"=1'-0"

0 8' 16' 32'

US Army Corps of Engineers

U.S. ARMY CORPS OF ENGINEERS
JACKSONVILLE DISTRICT
JACKSONVILLE, FLORIDA

CENTRAL AND SOUTH FLORIDA PROJECT
COMPREHENSIVE EVERGLADES RESTORATION PROJECT
LAKE OKEECHOBEE WATERSHED PROJECT
S-724 AND S-727 SPILLWAYS

PLATE NO.

P-14

STRUCTURE DATA										
STRUCTURE	ELEVATION									
	C1	C2	C3	C4	C5	C6	V1	V2	V3	V4
S-724	50.0	36.5	28.5	26.0	24.5	16.5	18.0	16.0	16.0	15.0
S-727	48.0	34.5	26.5	24.0	21.5	12.5	16.0	12.0	12.0	11.0

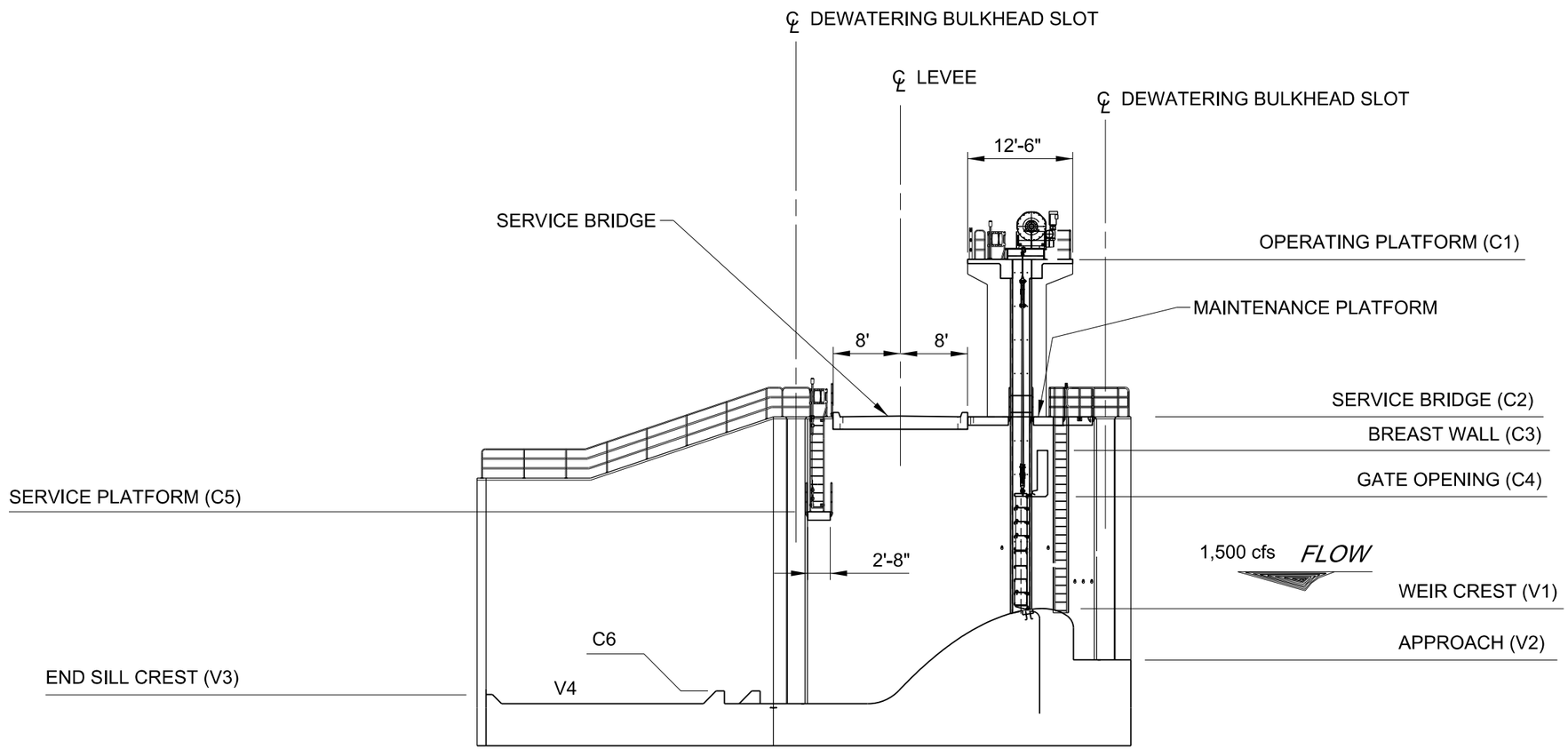

A
P-14

WAF CELL SPILLWAY SECTION

SCALE: 1/16"=1'-0"

0 8' 16' 32'

US Army Corps of Engineers

U.S. ARMY CORPS OF ENGINEERS
JACKSONVILLE DISTRICT
JACKSONVILLE, FLORIDA

CENTRAL AND SOUTH FLORIDA PROJECT
COMPREHENSIVE EVERGLADES RESTORATION PROJECT
LAKE OKEECHOBEE WATERSHED PROJECT

S-724 AND S-727 SPILLWAYS

PLATE NO.

P-15

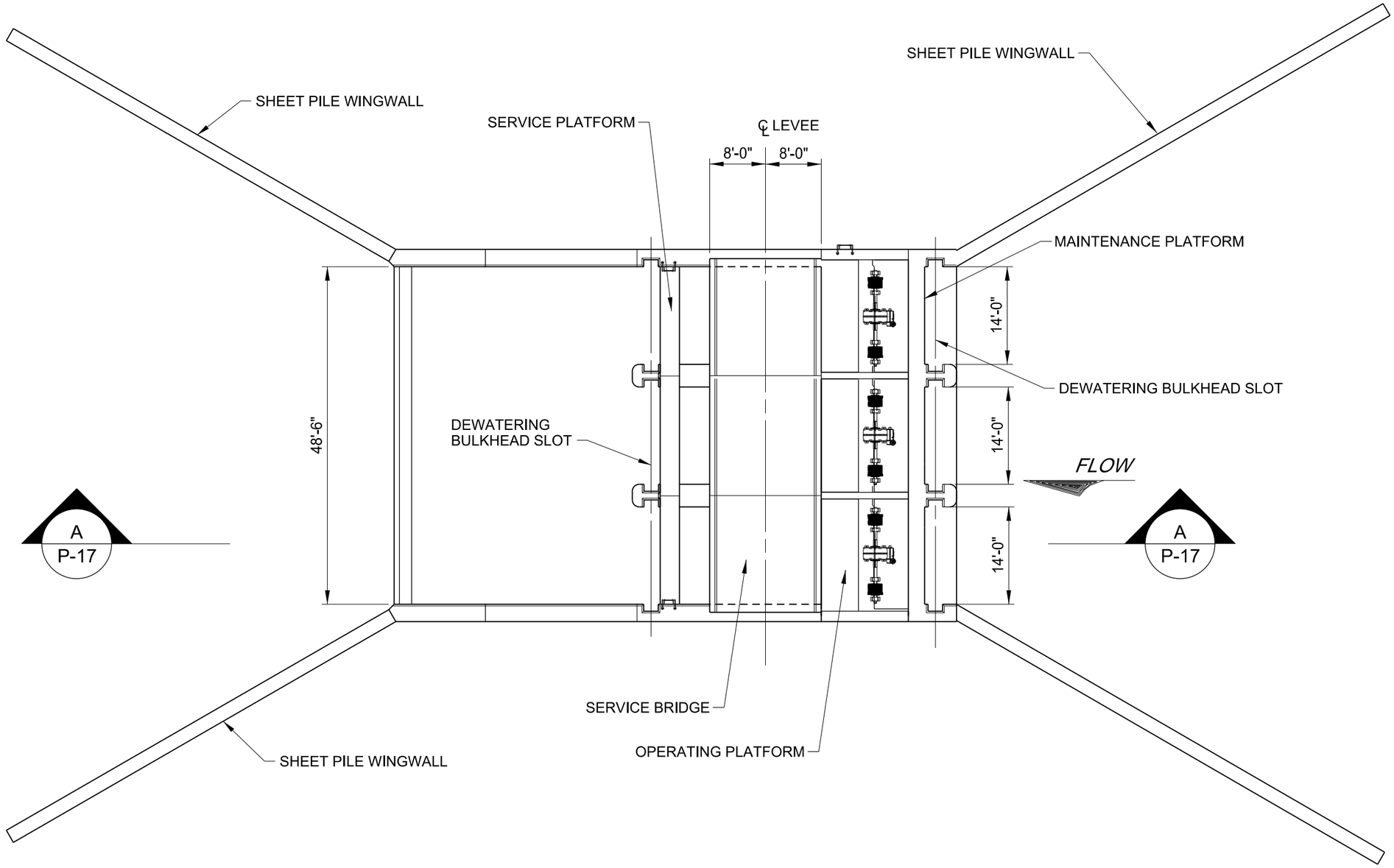

PLAN

SCALE: 1/16"=1'-0"

0 8' 16' 32'

US Army Corps of Engineers

U.S. ARMY CORPS OF ENGINEERS
JACKSONVILLE DISTRICT
JACKSONVILLE, FLORIDA

CENTRAL AND SOUTH FLORIDA PROJECT
COMPREHENSIVE EVERGLADES RESTORATION PROJECT
LAKE OKEECHOBEE WATERSHED PROJECT
S-728 AND S-731 SPILLWAYS

PLATE NO.

P-16

STRUCTURE DATA										
STRUCTURE	ELEVATION									
	C1	C2	C3	C4	C5	C6	V1	V2	V3	V4
S-728	47.5	34.5	22.0	20.0	20.5	9.5	13.0	9.0	9.0	8.0
S-731	44.0	31.0	22.0	20.0	19.0	5.5	12.0	6.0	5.0	4.0

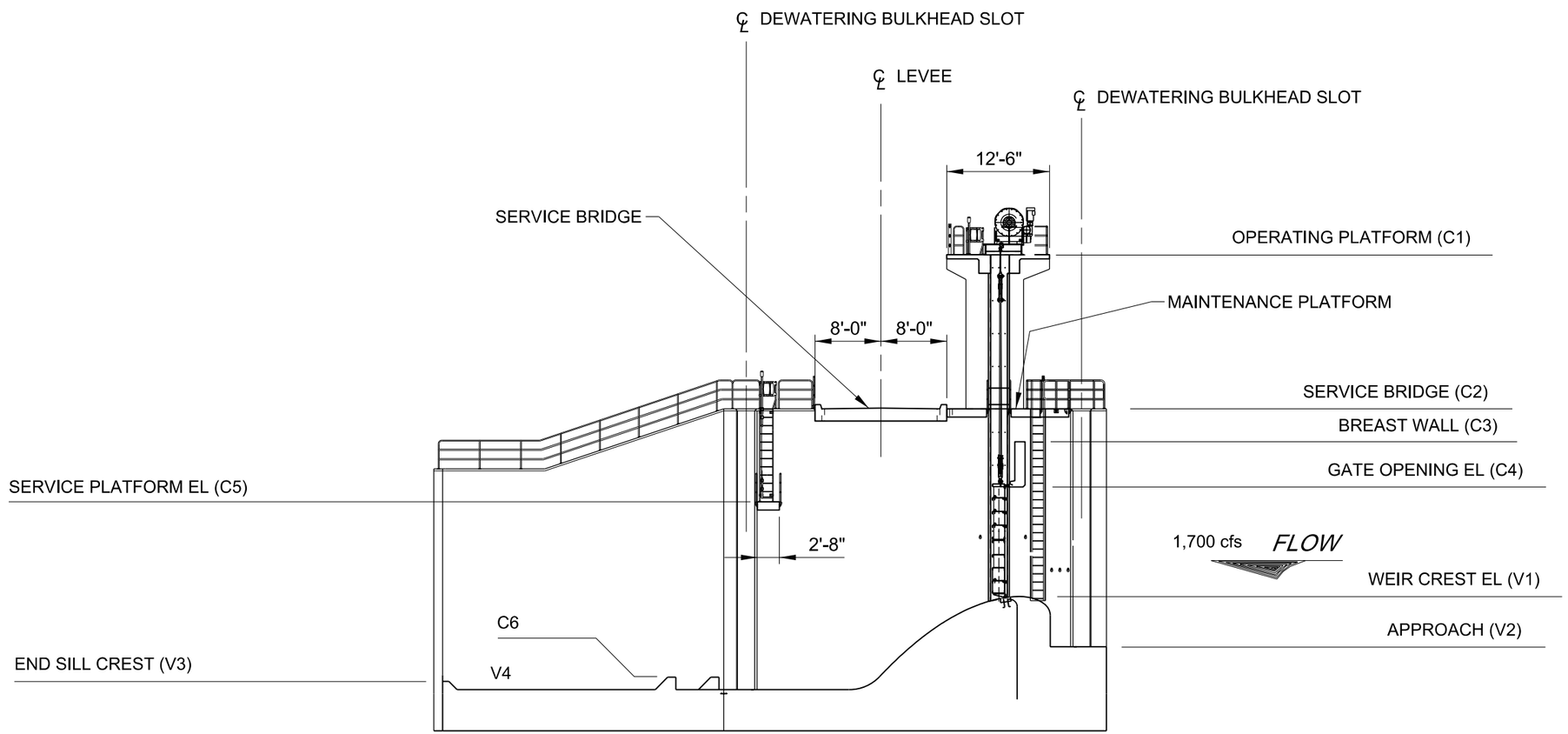

A
P-16

SPILLWAY SECTION

SCALE: 1/16"=1'-0"

0 8' 16' 32'

US Army Corps of Engineers

U.S. ARMY CORPS OF ENGINEERS
JACKSONVILLE DISTRICT
JACKSONVILLE, FLORIDA

CENTRAL AND SOUTH FLORIDA PROJECT
COMPREHENSIVE EVERGLADES RESTORATION PROJECT
LAKE OKEECHOBEE WATERSHED PROJECT

S-728 AND S-731 SPILLWAYS

PLATE NO.

P-17

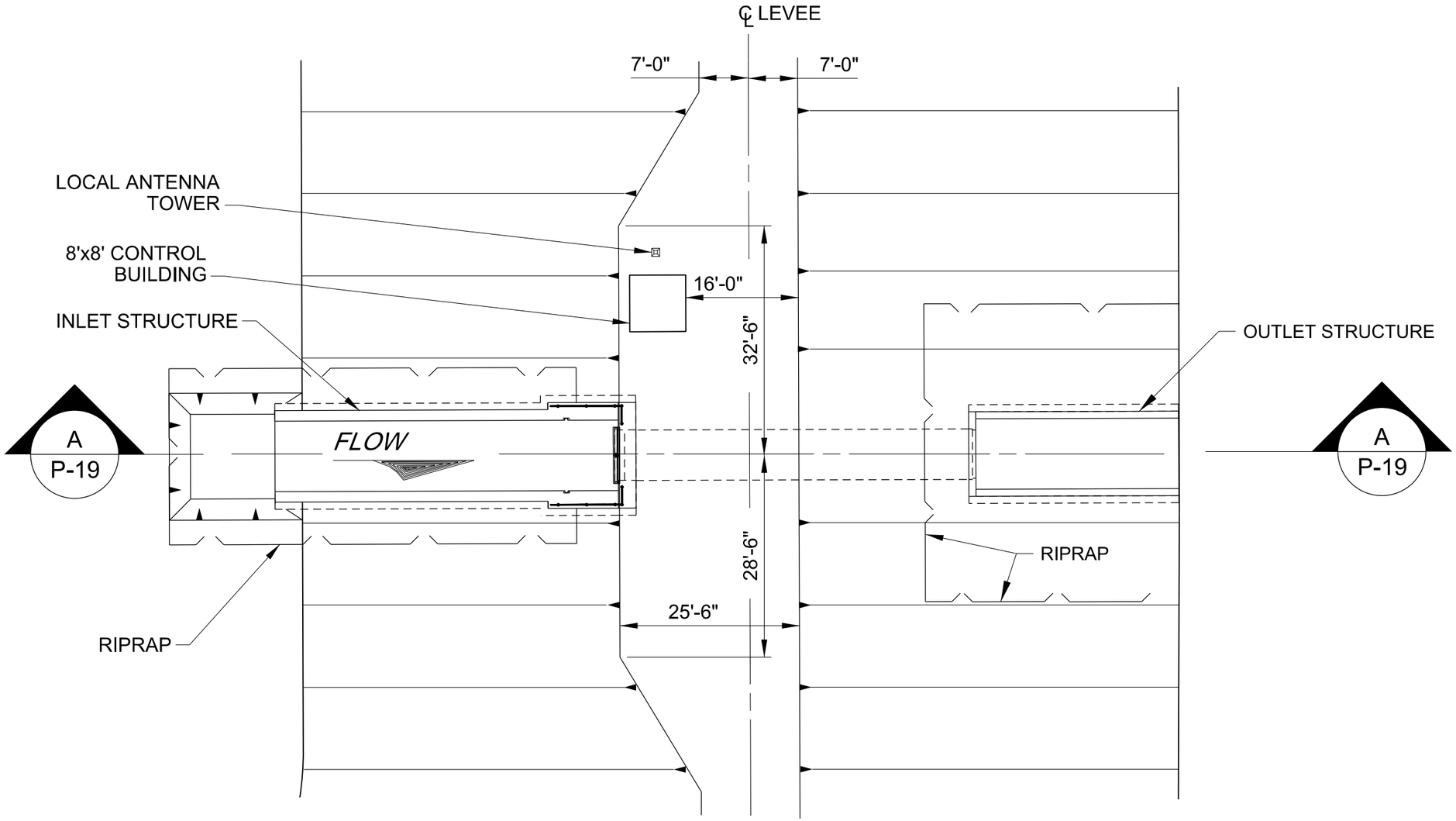

GATED CULVERT - PLAN

SCALE: 1"=20'

0 20' 40'

US Army Corps of Engineers

U.S. ARMY CORPS OF ENGINEERS
JACKSONVILLE DISTRICT
JACKSONVILLE, FLORIDA

CENTRAL AND SOUTH FLORIDA PROJECT
COMPREHENSIVE EVERGLADES RESTORATION PROJECT

LAKE OKEECHOBEE WATERSHED PROJECT

S-723 AND S-730 GATED CULVERTS

PLATE NO.

P-18

STRUCTURE DATA					
STRUCTURE	CULVERT SIZE	CFS	ELEVATION		
			C1	V1	V2
S-729	72"x72"	200	30.0	10.0	10.0
S-723	72"x72"	200	34.5	9.0	9.0

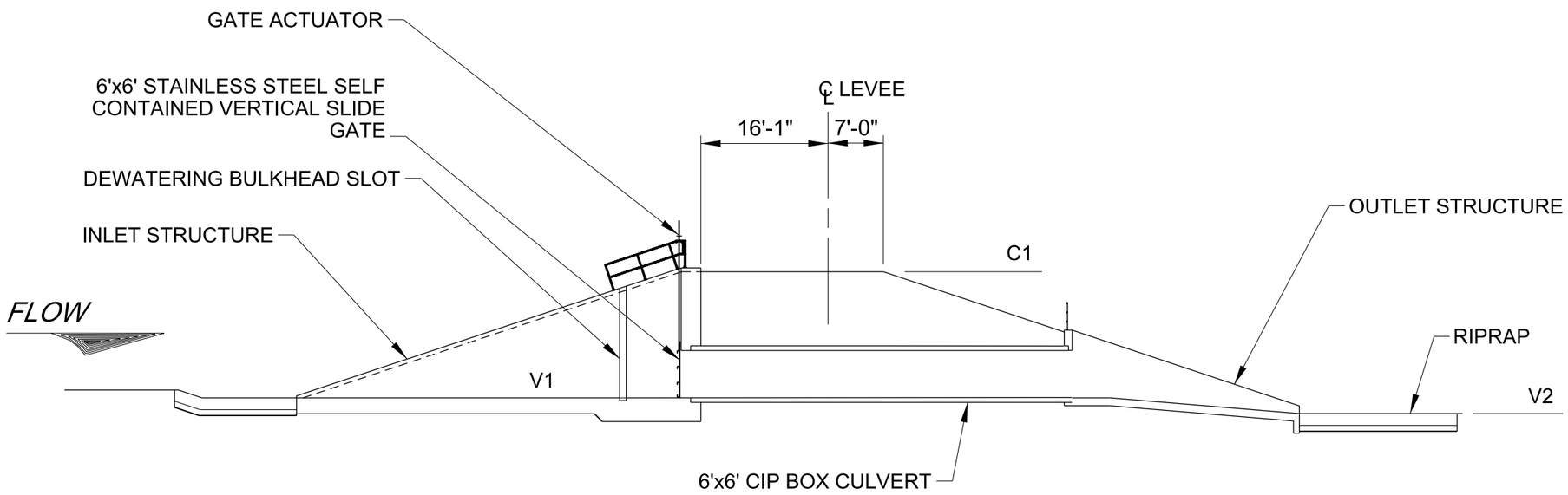

A
P-18

GATED CULVERT - PROFILE SECTION

SCALE: 1"=20'

0 20' 40'

US Army Corps of Engineers

U.S. ARMY CORPS OF ENGINEERS
JACKSONVILLE DISTRICT
JACKSONVILLE, FLORIDA

CENTRAL AND SOUTH FLORIDA PROJECT
COMPREHENSIVE EVERGLADES RESTORATION PROJECT
LAKE OKEECHOBEE WATERSHED PROJECT
S-723 AND S-729 GATED CULVERTS

PLATE NO.
P-19

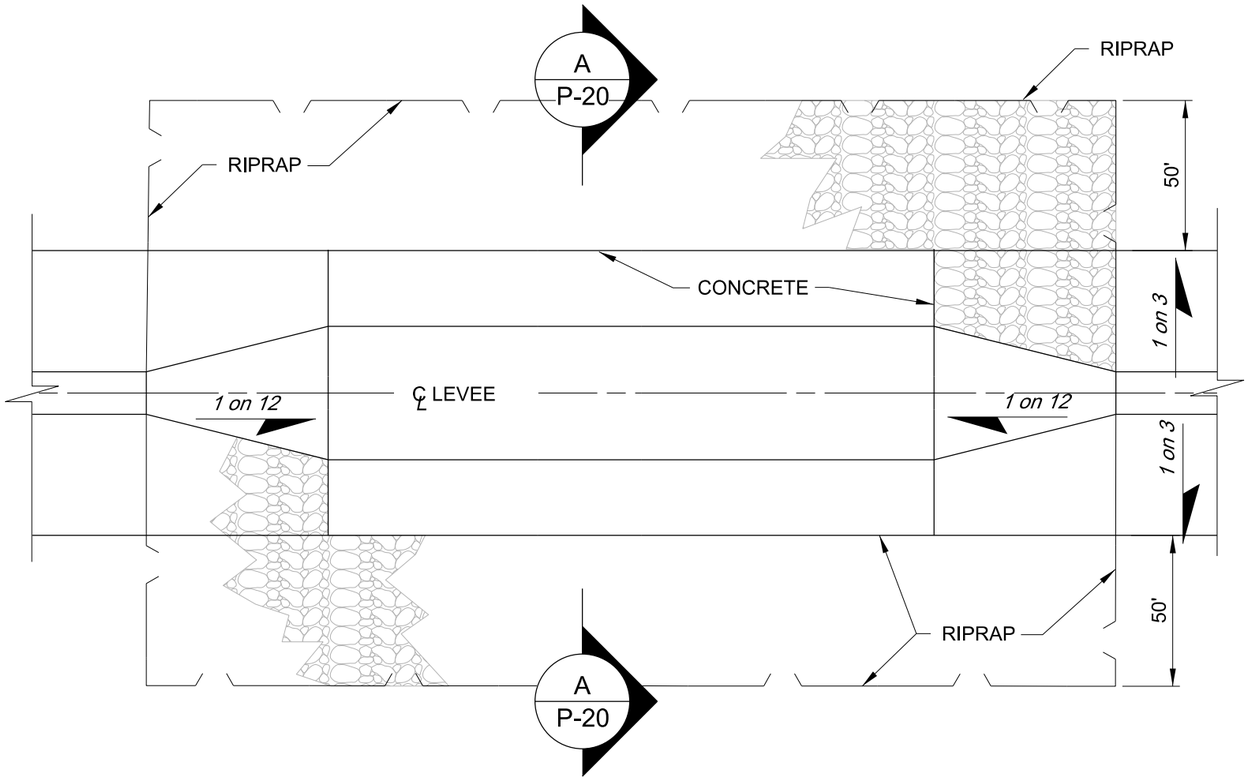

PLAN

SCALE: 1"=50'

0 50' 100'

STRUCTURE DATA					
STRUCTURE	L	W	ELEVATION		
			C1	C2	V1
S-724W	320	44	31.0	26.0	18.5
S-727W	320	44	29.0	24.0	13.0
S-728W	452	77	31.5	21.0	12.0

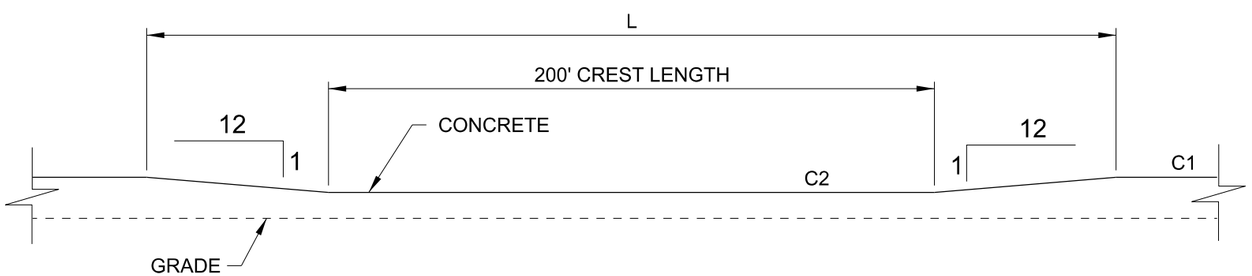

LEVEE CENTERLINE PROFILE

SCALE: 1"=50'

0 50' 100'

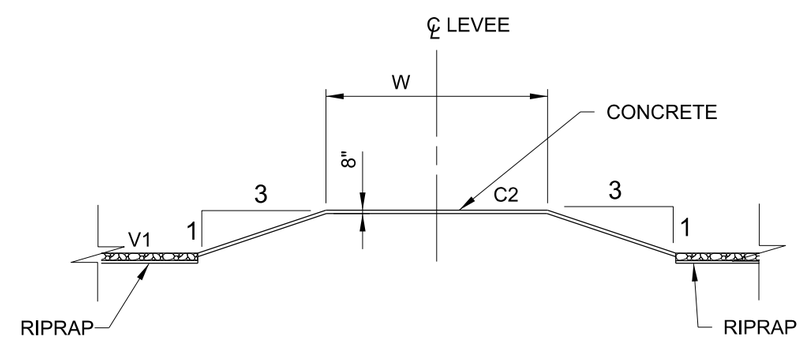

A
P-20

CROSS SECTION

SCALE: 1"=30'

0 30' 60'

US Army Corps of Engineers

U.S. ARMY CORPS OF ENGINEERS
JACKSONVILLE DISTRICT
JACKSONVILLE, FLORIDA

CENTRAL AND SOUTH FLORIDA PROJECT
COMPREHENSIVE EVERGLADES RESTORATION PROJECT
LAKE OKEECHOBEE WATERSHED PROJECT
S-724W, S-727W, S-728W SPILLWAYS

PLATE NO.
P-20

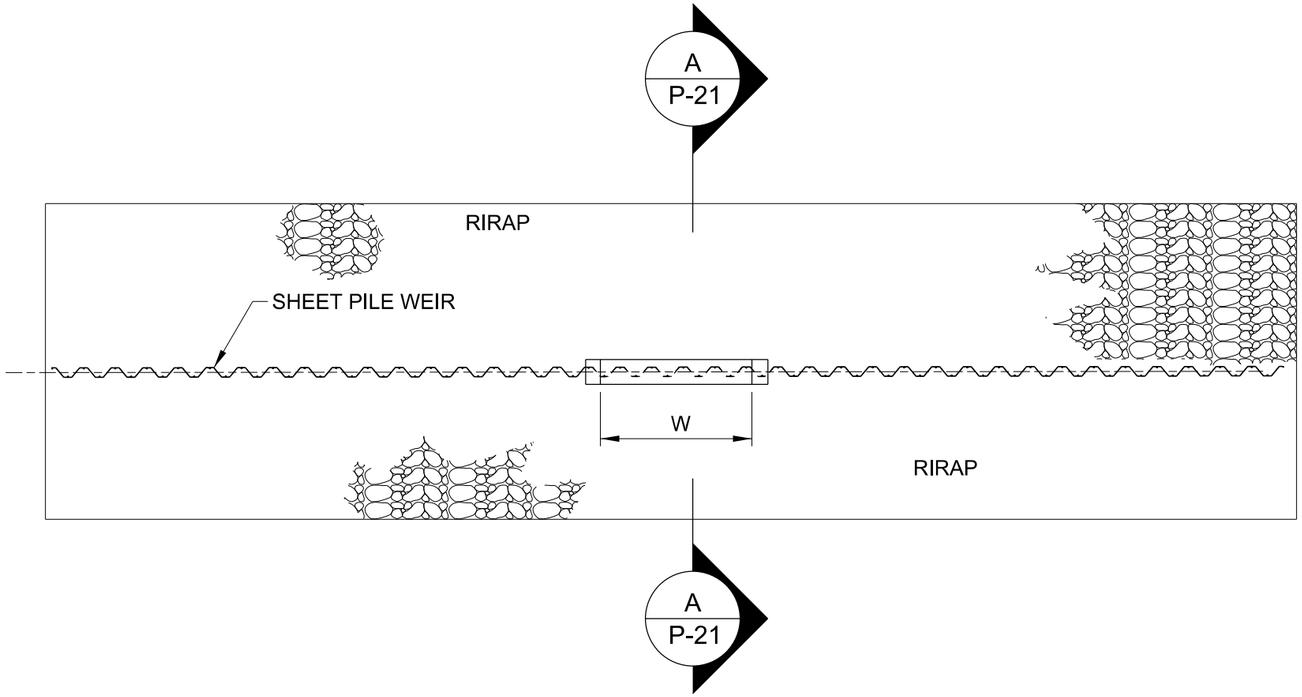

PLAN

SCALE: 1"=10'

0 10' 20'

STRUCTURE DATA								
STRUCTURE			ELEVATION					
	W1	W2	G	C1	C2	V1	V2	T1
S-722	20	120	±17.0	14.5	15.0	±-1.0	±-3.0	-10.0
S-726	20	120	±18.0	12.5	12.0	±0.0	±-2.0	-9.0

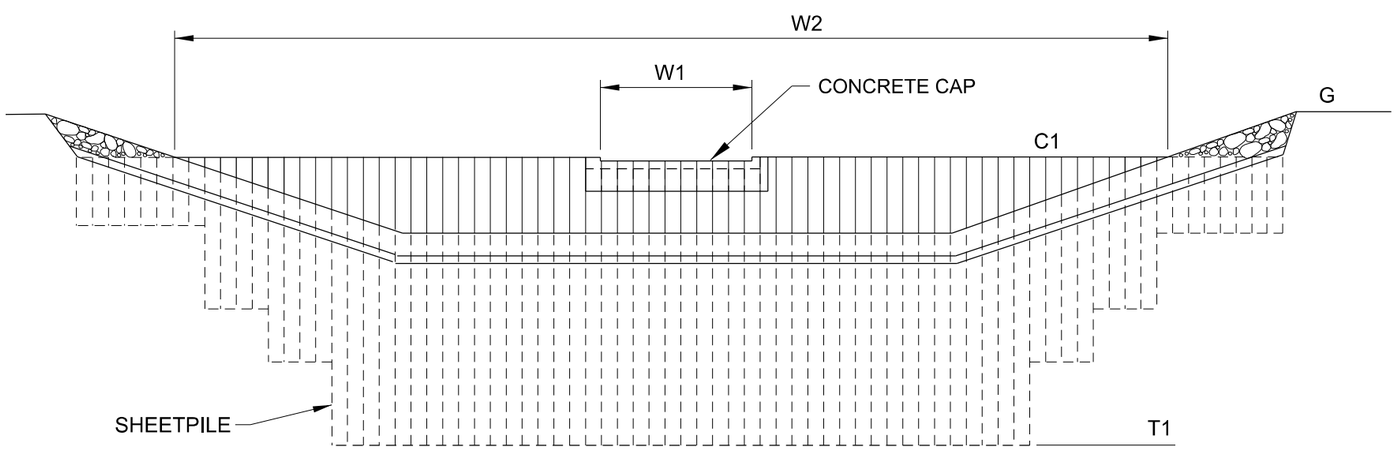

ELEVATION

SCALE: 1"=10'

0 10' 20'

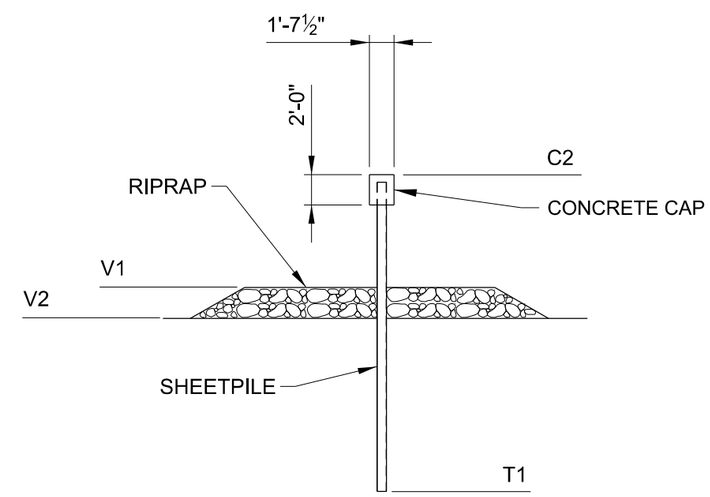

A
P-21

SECTION

SCALE: 1'=10'

US Army Corps of Engineers

U.S. ARMY CORPS OF ENGINEERS
JACKSONVILLE DISTRICT
JACKSONVILLE, FLORIDA

CENTRAL AND SOUTH FLORIDA PROJECT
COMPREHENSIVE EVERGLADES RESTORATION PROJECT
LAKE OKEECHOBEE WATERSHED PROJECT
S-722 AND S-726 SHEET PILE WEIR

PLATE NO.

P-21

STRUCTURE DATA						
STRUCTURE	CULVERT SIZE	CSF	ELEVATION			
			C1	C2	W1	V1
S-730	60"	50	31.5	19.0	12.0	10.0
S-732	60"	100	22.0	17.0	10.0	8.0
S-736	60"	75	25.5	n/a	15.5	13.0

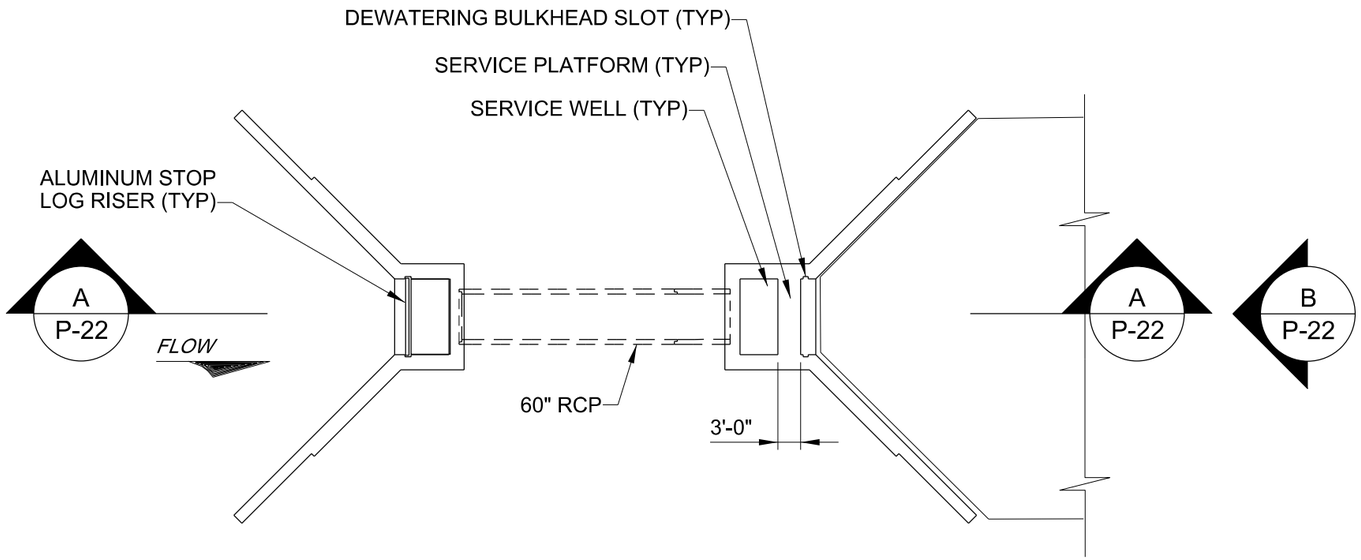

PLAN

SCALE: 1"=20'

0 20' 40'

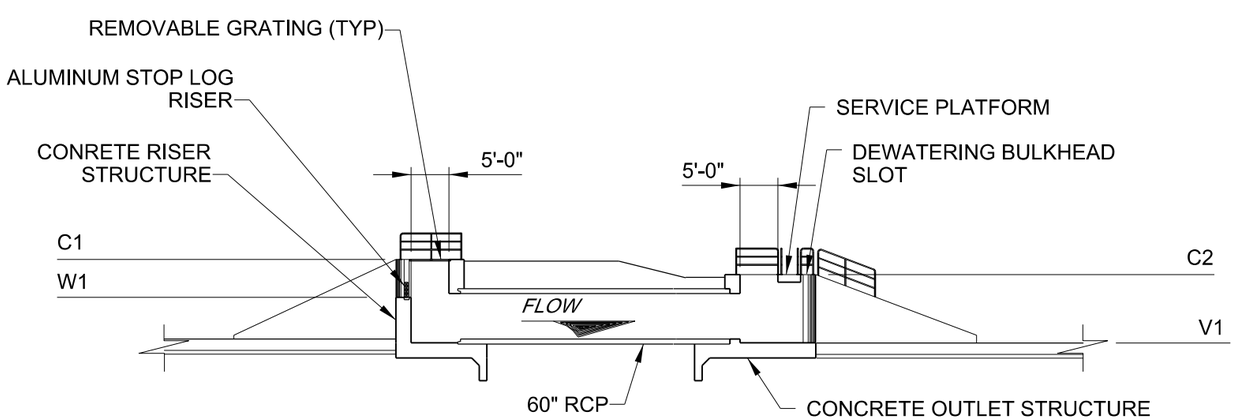

A
P-22

PROFILE SECTION

SCALE: 1"=20'

0 20' 40'

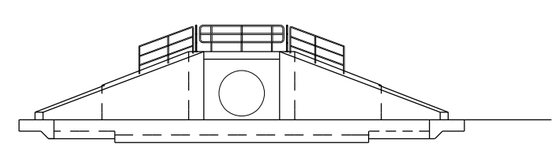

B
P-22

DOWNSTREAM ELEVATION

SCALE: 1"=20'

0 20' 40'

US Army Corps of Engineers

U.S. ARMY CORPS OF ENGINEERS
JACKSONVILLE DISTRICT
JACKSONVILLE, FLORIDA

CENTRAL AND SOUTH FLORIDA PROJECT
COMPREHENSIVE EVERGLADES RESTORATION PROJECT
LAKE OKEECHOBEE WATERSHED PROJECT
S-730, S-732, S-736 RISER STRUCTURES

PLATE NO.

P-22

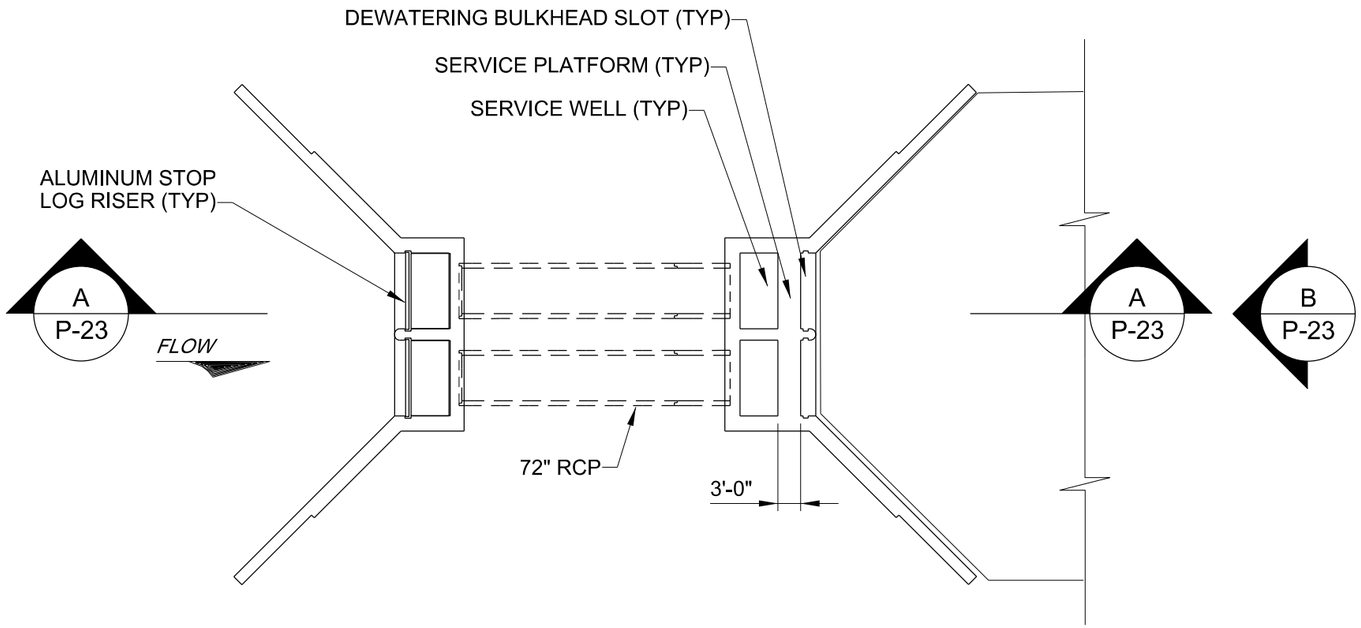

PLAN

SCALE: 1"=20'

0 20' 40'

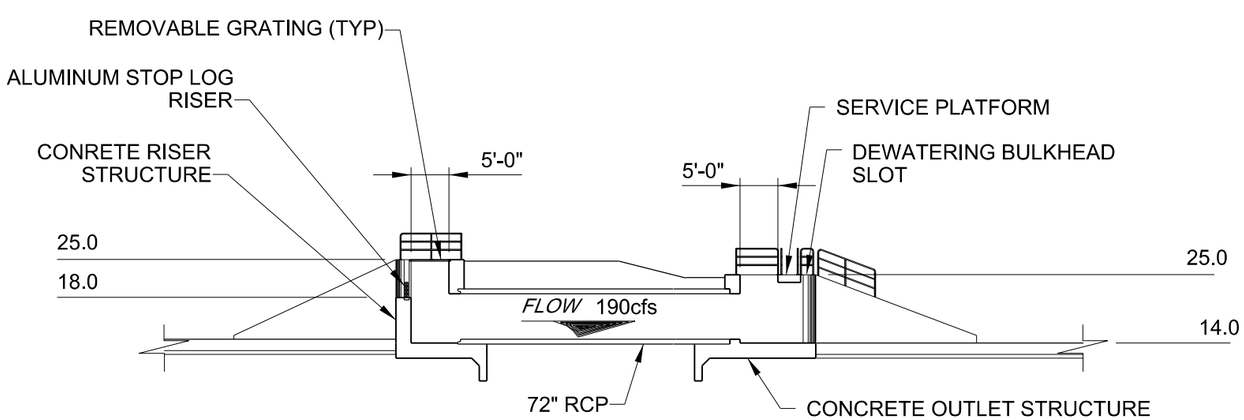

A
P-23

PROFILE SECTION

SCALE: 1"=20'

0 20' 40'

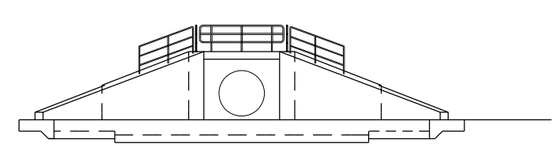

B
P-23

DOWNSTREAM ELEVATION

SCALE: 1"=20'

0 20' 40'

US Army Corps
of Engineers

U.S. ARMY CORPS OF ENGINEERS
JACKSONVILLE DISTRICT
JACKSONVILLE, FLORIDA

CENTRAL AND SOUTH FLORIDA PROJECT
COMPREHENSIVE EVERGLADES RESTORATION PROJECT
LAKE OKEECHOBEE WATERSHED PROJECT
S-734 RISER STRUCTURE

PLATE NO.
P-23

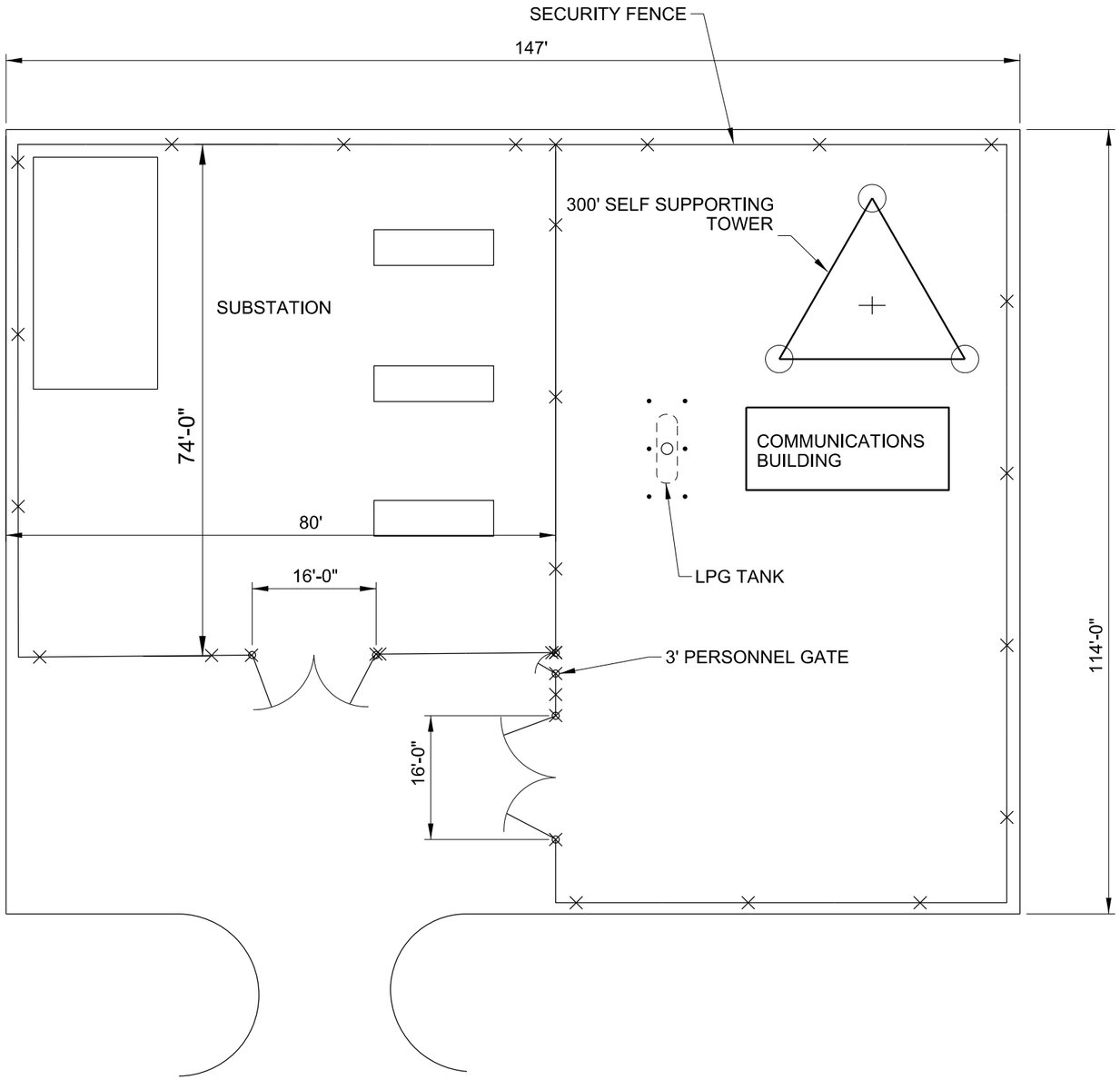

SITE PLAN

SCALE: 1"=20' 0 20' 40'

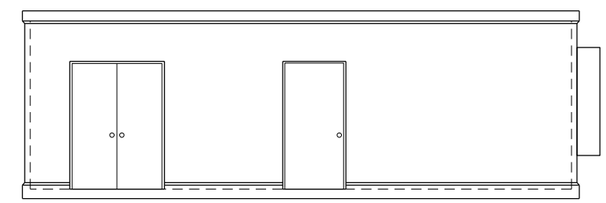

BUILDING FRONT ELEVATION

SCALE: 1/8"=1'-0" 0 4' 8' 16'

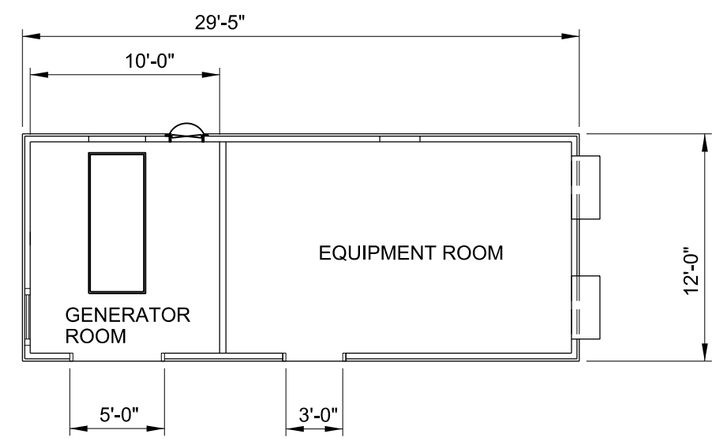

BUILDING FLOOR PLAN

SCALE: 1/8"=1'-0" 0 4' 8' 16'

US Army Corps of Engineers

U.S. ARMY CORPS OF ENGINEERS
JACKSONVILLE DISTRICT
JACKSONVILLE, FLORIDA

CENTRAL AND SOUTH FLORIDA PROJECT
COMPREHENSIVE EVERGLADES RESTORATION PROJECT
LAKE OKEECHOBEE WATERSHED PROJECT

PROJECT COMMUNICATIONS FAC.

PLATE NO.

P-24

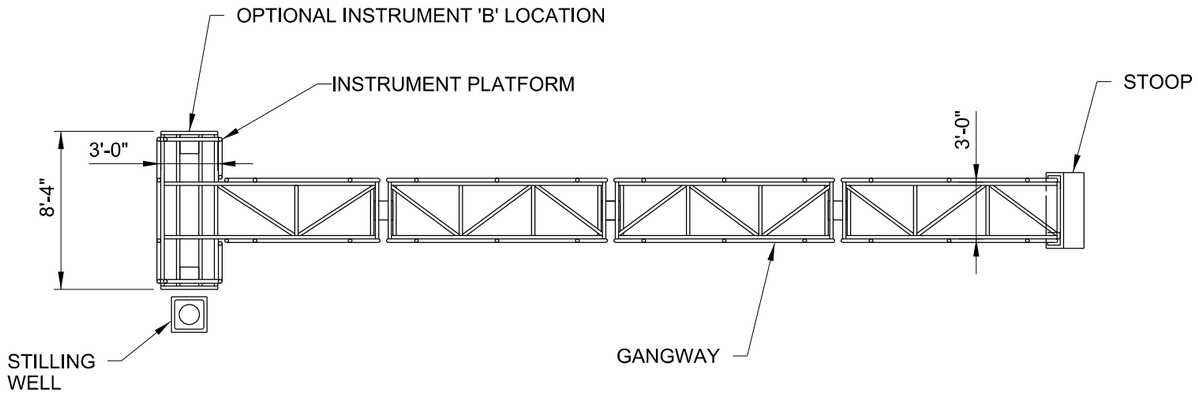

PLAN VIEW

SCALE: 1/8"=1'-0"

0 4' 8' 16'

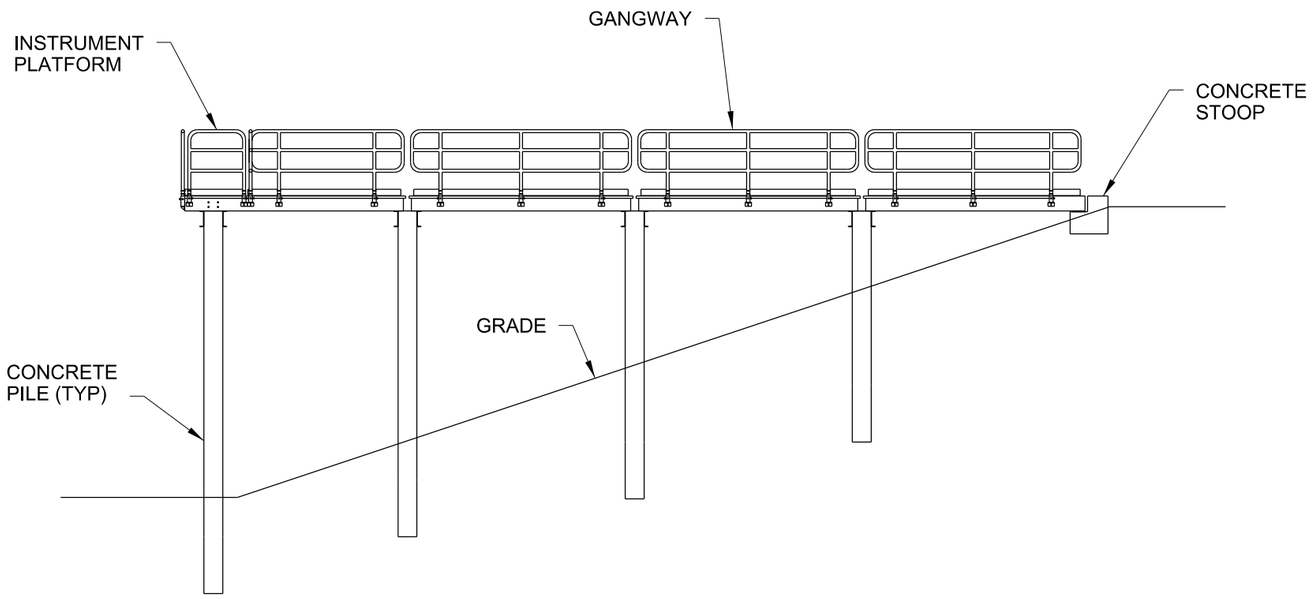

SIDE ELEVATION

SCALE: 1/8"=1'-0"

0 4' 8' 16'

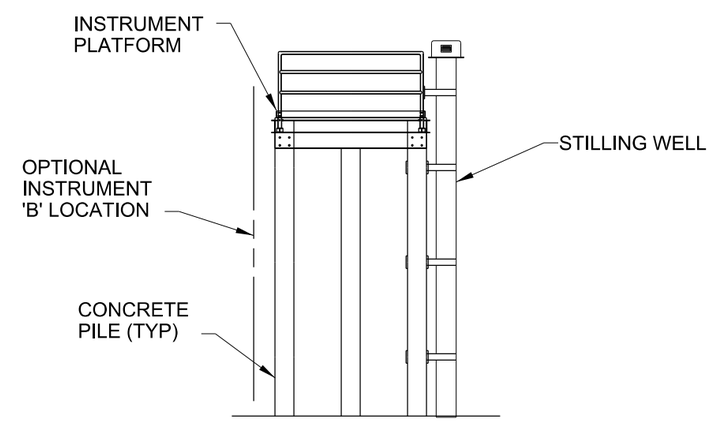

FRONT ELEVATION

SCALE: 1/8"=1'-0"

0 4' 8' 16'

US Army Corps of Engineers

U.S. ARMY CORPS OF ENGINEERS
JACKSONVILLE DISTRICT
JACKSONVILLE, FLORIDA

CENTRAL AND SOUTH FLORIDA PROJECT
COMPREHENSIVE EVERGLADES RESTORATION PROJECT
LAKE OKEECHOBEE WATERSHED PROJECT
TYPICAL STILLING WELL PLATFORM

PLATE NO.

P-25

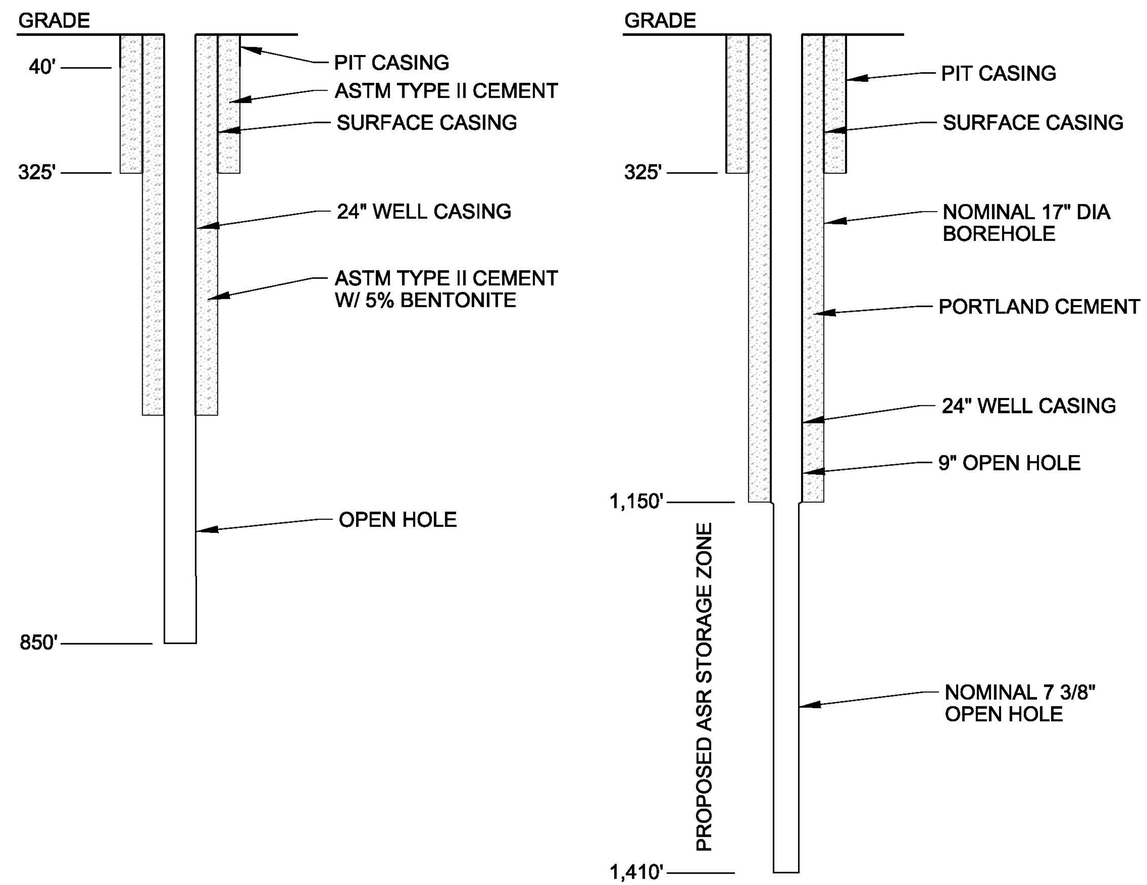

US Army Corps of Engineers

U.S. ARMY CORPS OF ENGINEERS
JACKSONVILLE DISTRICT
JACKSONVILLE, FLORIDA

CENTRAL AND SOUTH FLORIDA PROJECT
COMPREHENSIVE EVERGLADES RESTORATION PROJECT
LAKE OKEECHOBEE WATERSHED PROJECT

ASR WELL DETAILS

PLATE NO.

P-26

ANNEX G-1

GEOLOGICAL INVESTIGATIONS

CESAJ-EN-G 10 October 2017

MEMORANDUM FOR RECORD

SUBJECT: Preliminary summary of soils and shallow subsurface geological characteristics on the footprints of the proposed K-42 and K-05 reservoir sites, Highlands and Glades Counties, Florida for the Lake Okeechobee Watershed Restoration Project

1. Engineering Division has performed a technical evaluation of the material characteristics and permeability of soils that underlie the footprints of the proposed K-42 and K-05 reservoir sites. This evaluation was conducted to estimate seepage losses at each proposed site. This memorandum supports the 3x3x3 SMART planning process for the Lake Okeechobee Watershed Restoration Project.

2. Preliminary geotechnical data obtained for this project consists of existing and newly acquired Standard Penetration Test (SPT) borings, results from constant-head gravity tests and double-ring infiltrometer tests. These subsurface datasets are supplemented with surface soil permeability data obtained from the National Resource Conservation Survey's (NRCS) web soil survey tool. A full analysis of the double-ring infiltrometer data has yet to be performed.

3. Saturated hydraulic conductivity values of the surface soils range from 0.0028 to 0.0092 cm/sec at the K-42 site, and from 0.0078 to 0.0092 cm/sec at the K-05 site. These values are interpreted by the NRCS as moderately high to high, indicating the ease of infiltration from the reservoir through surface soils.

4. Hydraulic conductivity values were calculated from constant-head gravity tests and NRCS data. These values were input to a 2D finite element seepage model using SEEP/W. The conceptual model was constructed for both reservoir sites with 3 layers below each site's embankment, the embankment, and a seepage canal. Three pool depths (5 feet, 10 feet, and 15 feet) were evaluated for each site. Each pool depth simulation was run with and without a 60-foot deep seepage cutoff wall at each site.

5. The range of seepage losses are similar at both reservoir sites. Without a cutoff wall, seepage losses range between 362 and 638 cfs at the K-42 site, and between 278 and 592 cfs at the K-05 site. With a cutoff wall, seepage losses are reduced by approximately one-third and range between 254 and 438 cfs at K-42, and between 189 and 378 cfs at K-05. The largest seepage loss occurs at the deepest pool depth of 15 feet.

6. For further questions or additional information, please contact Michael W. Viessman, P.E., (904) 232-1969, Michael.W.Viessman@usace.army.mil; or June E. Mirecki, Ph.D., P.G. (904) 232-1236, June.E.Mirecki@usace.army.mil.

1 Encl

FOR LAUREEN A. BOROCHANER, P.E.
Chief, Engineering Division

MEMORANDUM FOR RECORD

SUBJECT: Preliminary summary of soils and shallow subsurface geological characteristics on the footprints of the proposed K-42 and K-05 reservoir sites, Highlands and Glades Counties, Florida for the Lake Okeechobee Watershed Restoration Project

1. References.

a. Challenge Engineering & Testing, Inc., Final Report Lake Okeechobee Watershed, Highland & Glades Counties, Florida. Undated report (2007), 812 p.

b. Challenge Engineering & Testing, Inc., Final Report Lake Okeechobee Watershed, K-42 and I-17 Project, Phase II, 2008, 242 p.

c. Domenico, P.A. and Schwartz, F.W., 1990. Physical and Chemical Hydrogeology. New York: John Wiley & Sons, p. 89.

d. Dunnicliff, J. Geotechnical Instrumentation for Monitoring Field Performance. New York: John Wiley & Sons, Inc., 1993. Print.

e. Hvorslev, M. J. April 1951. Time Lag and Soil Permeability in Ground-Water Observations. Vicksburg Mississippi: Waterways Experiment Station U.S. Army Corps of Engineers, Bulletin No. 36.

f. National Resource Conservation Service Web Soil Survey Tool, available at https://websoilsurvey.nrcs.usda.gov/app/

g. U.S. Department of Interior, Bureau of Reclamation. January 2014. Design Standards No. 13, Embankment Dams, Chapter 8: Seepage, Phase 4 (Final).

2. Background. Construction of two reservoirs is proposed in the alternative list for the Lake Okeechobee Watershed Restoration Project (LOWRP). The proposed K-42 reservoir footprint extends along the north side of canal C-41A from State Road (S.R.) 721 on the eastern margin to a north-south line extending north from Structure S-83 on the western margin (Figure 1). The proposed K-05 reservoir footprint extends west from the Kissimmee River floodplain, and is bounded on the south by S.R. 78. The areas are within the Eastern Flatlands physiographic region, consists of relatively flat topography with ponds and depressional wetlands, and grades into the Kissimmee River alluvial plain to the east.

The LOWRP currently is in the SMART Planning phase, leading to selection of the "Tentatively Selected Plan" (TSP) in October 2017. The alternatives currently under consideration consist of a combination of reservoirs, aquifer storage and recovery wells, and tracts of land for wetland restoration. With respect to the reservoir footprints, the project delivery team requested an estimate of the seepage losses from each impoundment. Excessive seepage could reduce the likelihood that one or both reservoirs are chosen as a part of the TSP.

Figure 1. Locations of the proposed K-42 and K-05 reservoir footprints, located north of C-41A and west of the Kissimmee River alluvial plain (green), respectively. Red area is the Brighton Seminole Reservation. Yellow pins are the locations of 2017 geotechnical testing sites.

3. Data Collection Effort. Three types of data were obtained during explorations at the K-42 and K-05 sites. Earlier explorations provided core borings for the K-42 site (Challenge Engineering & Testing, 2007, 2008) along the north side of C-41A and west of S.R. 721. The 2017 geotechnical exploration includes Standard Penetration Test (SPT) borings at both locations, constant head gravity tests (CHT) to estimate vertical hydraulic conductivity at depth, and double ring infiltrometer tests (DRI). As a full analysis of the DRI data has yet to be performed, information from the National Resource Conservation Service (NRCS) is being used in its place. Ultimately, evaluation of the seepage characteristics at the reservoir sites will include all three data types (SPT, CHT, and DRI).

Table 1. Summary of available geotechnical data for the K-05 and K-42 footprints.

Borings	Location	DRI Test A	DRI Test B	SPT (Depth, ft.)	CHT	Notes
CP17-CB-0042	K-05	X	X	X (30)	X	Site was submerged – no DRI
CP17-CB-0043	K-05	X	X	X (30)	X	Site was submerged – no DRI
CP17-CB-0044	K-05	X	X	X (30)	X	
CP17-CB-0045	K-05	X	X	X (30)	X	
CP17-CB-0046	K-05	X	X	X (30)	X	
CP06-CB-0014	K-42 eastern	NA	NA	X (80)	NA	
CP06-CB-0015	K-42 eastern	NA	NA	X (80)	NA	
CP06-CB-0016	K-42 eastern	NA	NA	X (150)	NA	
CP08-CB-0036	K-42 eastern	NA	NA	X (80)	NA	
CP17-CB-0049	K-42 eastern	NA	NA	X (30)	X	
CP17-CB-0050	K-42 eastern	NA	NA	X (30)	X	
CP17-CB-0051	K-42 eastern	NA	NA	X(30)	X	
CP06-CB-0020/ CP17-CH-0020	K-42 along C-41A	NA	NA	X (60)	X	
CP06-CB-0021	K-42 along C-41A	NA	NA	X (60)	NA	
CP06-CB-0022	K-42 along C-41A	NA	NA	X (150)	NA	
CP06-CB-0023/ CP17-CH-0023	K-42 along C-41A	X	X	X (60)	X	
CP06-CB-0018/ CP17-CH-0018	K-42 along C-41A	NA	NA	X (80)	X	
CP06-CB-0019/ CP17-CH-0019	K-42 along C-41A	X	?	X (80)	X	Second DRI test incomplete due to time limitation
CP06-CB-0020/ CP17-CH-0020	K-42 along C-41A	NA	NA	X (80)	X	
CP06-CB-0013/ CP17-CH-0013	K-42 along C-41A	X	X	X (80)	X	
CP17-CB-0048	K-42 along C-41A	X	X	X (30)	X	

CHT = constant-head gravity test. DRI – double ring infiltrometer. NA = Not Applicable

4. Subsurface Geology. Eleven core borings were obtained previously along the periphery of the K-42 site (Challenge Engineering, 2007, 2008), and these were supplemented by five additional borings in 2017. The borings obtained in 2007-2008 were located along the southern margin of K-42, at the northern landside toe of levees adjacent to C-41A, and also along the eastern margin. The 2007 borings were drilled to depths of 60 to 150 feet below land surface, at land surface elevations ranging between 26.5 and 38 feet (NAVD88). The 2017 borings terminate at 30 feet below land surface. There were no existing borings for the K-05 site, so the five borings and accompanying CHT and DRI tests were obtained during the 2017 geotechnical investigation.

The borings show the sedimentary evolution of the Kissimmee River Basin from marine to fluvial depositional environments during the Late Pleistocene through Holocene Epochs. Alluvial sediments consisting of poorly-graded quartz sand with occasional silt

overlie marine deposits that are poorly-graded silty sands. The uppermost appearance of carbonate shell fragments characterizes the upper surface of marine deposition, at elevations ranging between +8 and -31 feet (NAVD88).

A conceptual 2D seepage model was developed from lithologies shown in SPT borings. These lithologies were generalized into three conceptual model layers: a surficial soil layer comprised of poorly-graded sands with silt (SP-SM); a middle layer consisting of poorly-graded, fine-grained sand (SP) to represent alluvial deposits; and a basal layer consisting of poorly-graded sands with silt (SP-SM) to represent marine deposits. Further discussion on the seepage modeling is found in paragraph 7.

5. Permeability of Surface Soils. As the data from the DRI testing has not been fully analyzed, permeability of the surface soils was estimated using the NRCS mapping tool. Conceptually, these maps suggest the ease to which water can infiltrate surface soils. Within the K-42 and K-05 project areas, mapped values of saturated hydraulic conductivity are shown in Figures 2 and 3, respectively.

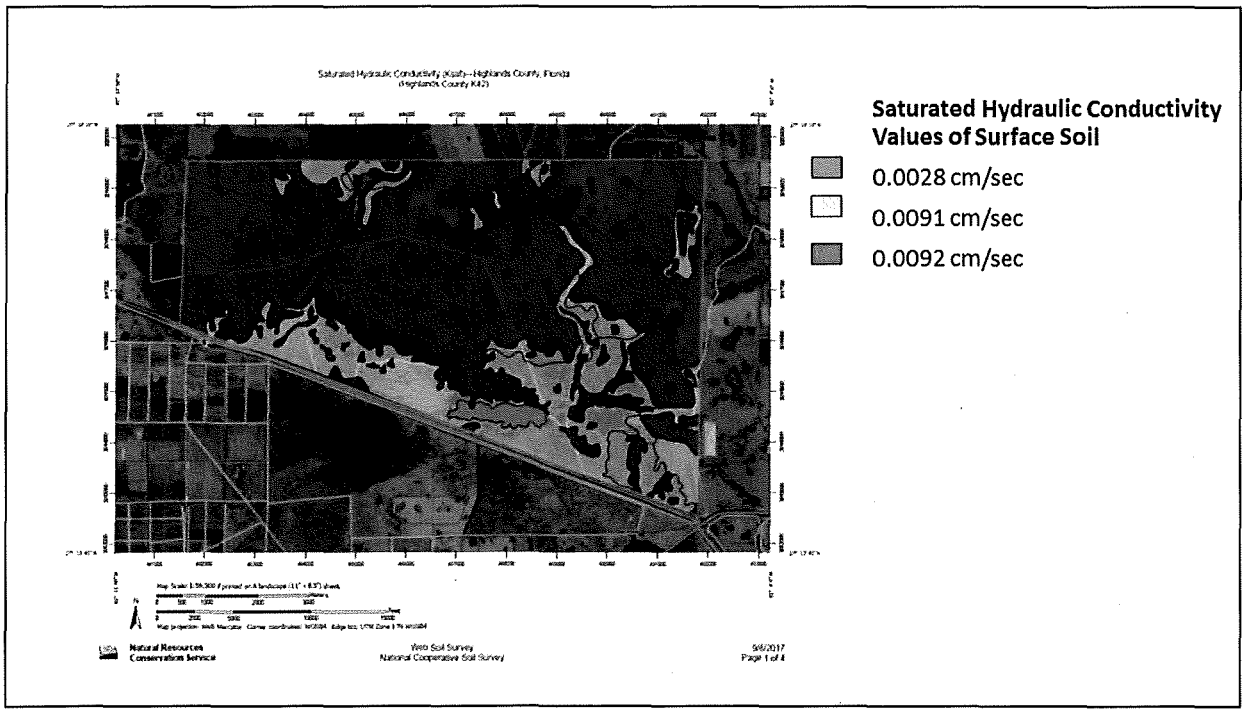

Figure 2. Mapped values of saturated hydraulic conductivity for surface soils at the K-42 site.

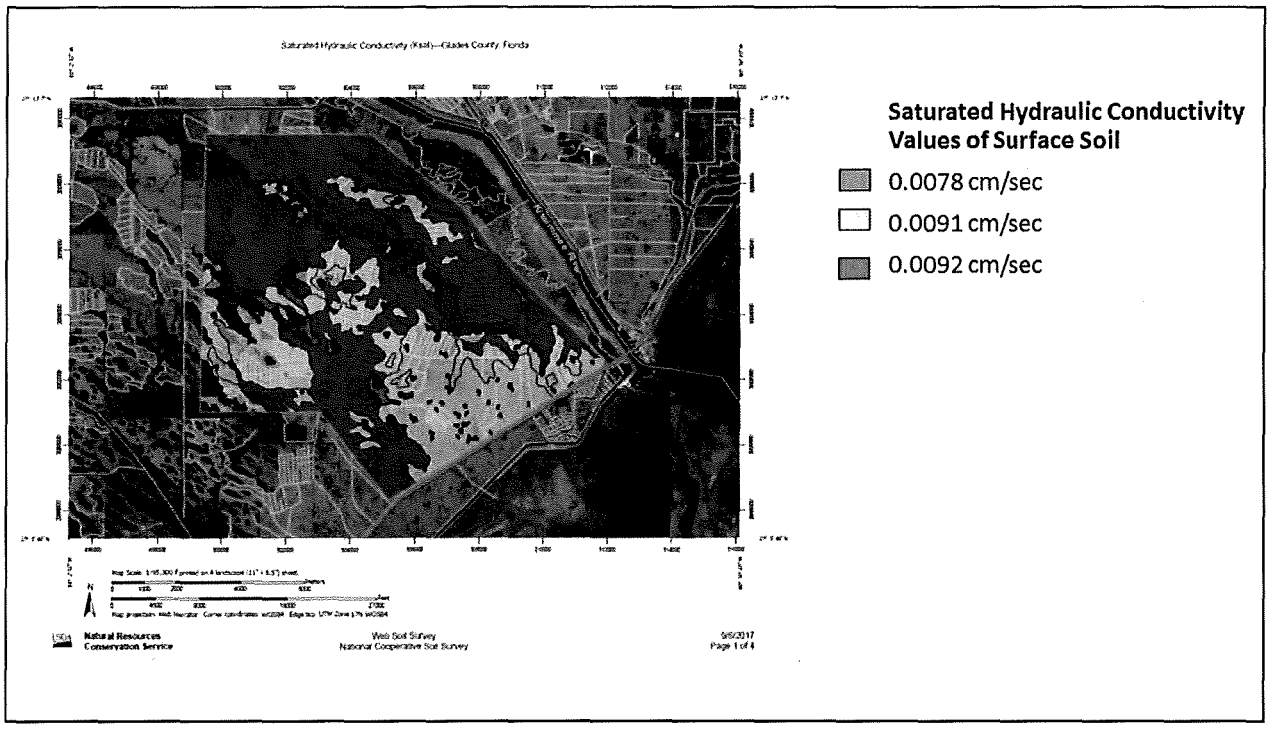

Figure 3. Mapped values of saturated hydraulic conductivity for surface soils at a portion of the K-05 site.

Surface soils are variably saturated, depending on precipitation. Saturated hydraulic conductivity values represent the maximum ability of a soil to transmit water under a hydraulic gradient (Domenico and Schwartz, 1990). Mapped values range from 0.0028 cm/sec to 0.0092 cm/sec for the K-42 site and from 0.0078 cm/sec to 0.0092 cm/sec for the K-05 site. The NRCS classifies these hydraulic conductivity values as moderately high or high, respectively. As a result, it is likely that seepage losses from each impoundment will play a major role in the design of the project.

Comparing the NRCS hydraulic conductivity value of 0.0092 cm/sec to that listed for unconsolidated natural soils by the Bureau of Reclamation (Table 2), the NRCS value falls within the values for a silty sand (SM) and a fine-grained poorly graded sand (SP), consistent with the surface soils encountered by the borings.

Both reservoir footprints are dominated by surface soils having high hydraulic conductivity values (0.0092 cm/sec) suggesting that surface water will readily infiltrate to the surficial aquifer.

Permeability k_H of Unconsolidated Natural Soils
(k_H inversely related to % finer grains)

Soil	k_H Range (ft/yr or 10^{-6} cm/s)
Gravel, open-work	>2,000,000
Gravel (GP)	200,000 to 2,000,000
Gravel (GW)	10,000 to 1,000,000
Sand, coarse (SP)	10,000 to 500,000
Sand, medium (SP)	1,000 to 100,000
Sand, fine (SP)	500 to 50,000
Sand (SW)	100 to 50,000
Sand, silty (SM)	100 to 10,000
Sand, clayey (SC)	1 to 1,000
Silt (ML)	1 to 1,000
Clay (CL)	~0 to 3

References: [15], [18], [22-29], [32-36]

Table 2. Permeability of natural soils (from Bureau of Reclamation Figure 8.3.2.3.1-1, 2014).

6. Permeability of Subsurface Materials. Subsurface permeability was evaluated using the results from constant head gravity tests conducted (at depth) in a variety of material types. Test results enable calculation of vertical hydraulic conductivity of in-situ soils.

The Hvorslev equation ("Case 4"; Hvorslev, 1951) was used to calculate the hydraulic conductivity in the vertical direction (k_y) in the saturated portion of the surficial aquifer. Using an anisotropy ratio (k_x/k_y) of 10 based on guidance from the Bureau of Reclamation for stratified deposits (2014), the hydraulic conductivity in the horizontal direction (k_x) is estimated ("Column C" in Tables A1 and A2, Appendix A). Based on the material encountered at the test depth, a corresponding k_x value from Table 2 was listed for comparison ("Column D"). Considering both reservoir sites, over half of the field values closely match the maximum published values for the same material classification – especially for a fine sand (SP). The similarity of values obtained from the constant head tests and published values (based on material characteristics) supports the validity of this approach, and greater confidence in the use of these values in seepage modeling.

7. Seepage Modeling. A conceptual 2D finite element seepage model was constructed using SEEP/W, a part of the GeoStudio 2012 software suite. SEEP/W is used to analyze groundwater seepage and pore-water pressure within porous soil and rock. The main objective of the modeling effort was to estimate the seepage loss from a section of each reservoir site and the seepage uptake into the adjacent seepage canal.

a. Conceptual Model Geometry. The 2D model consists of 3 foundation layers (Figure 4). The surficial layer is a thin (1.5 foot) soil layer characterized by a saturated hydraulic

conductivity value of 0.0092 cm/sec, obtained from the NRCS graphics. Shallow alluvial deposits are represented as a 30-foot thick poorly-graded sand layer (SP) characterized by a hydraulic conductivity value (k_x) of 0.049 cm/sec for K-42 and 0.053 cm/sec for K-05. Deeper marine deposits are represented as a 120-foot thick poorly-graded sand with silt (SP-SM) characterized by a saturated hydraulic conductivity value of 0.03 cm/sec. Hydraulic conductivity values for the SP and SP-SM layers are based on average values obtained from constant head gravity tests (Tables A1 and A2, Appendix A).

For K-42, the ground surface elevation was set at +30 feet based on top-of-boring survey data and the crest elevation for the perimeter embankment was set at +60 feet (both NAVD88). For K-05, the ground surface elevation was set at +17 feet based on top-of-boring survey data and the crest elevation for the perimeter embankment was set at +47 feet (both NAVD88). The near-edge of the perimeter seepage canal was placed 150 feet south of the exterior toe of the perimeter embankment and the bottom elevation was set at +9 feet for K-42 and -4 feet for K-05 (both NAVD88). Side slopes of 1V:3H were used for both the perimeter embankment and seepage canal.

b. Pool Depth and Seepage Canal Stage. Simulations were run for three pool depths: 5-feet, 10-feet, and 15-feet. The water surface elevation in the perimeter seepage canal was set at +21 feet for K-42 and +12 feet for K-05 (both NAVD88), based on groundwater readings taken in the boreholes after 24 hours. Both the reservoir pool and the canal stage were set as a steady-state condition.

c. Cutoff Wall Configuration. A seepage barrier (cutoff wall) was added to the model in each pool-depth simulation. The cutoff wall began 10 feet below the top of the perimeter embankment, extended 60 feet below ground surface, and was 3 feet wide. The wall depth (below ground surface) was selected as construction costs have already been determined for a cutoff wall with similar dimensions.

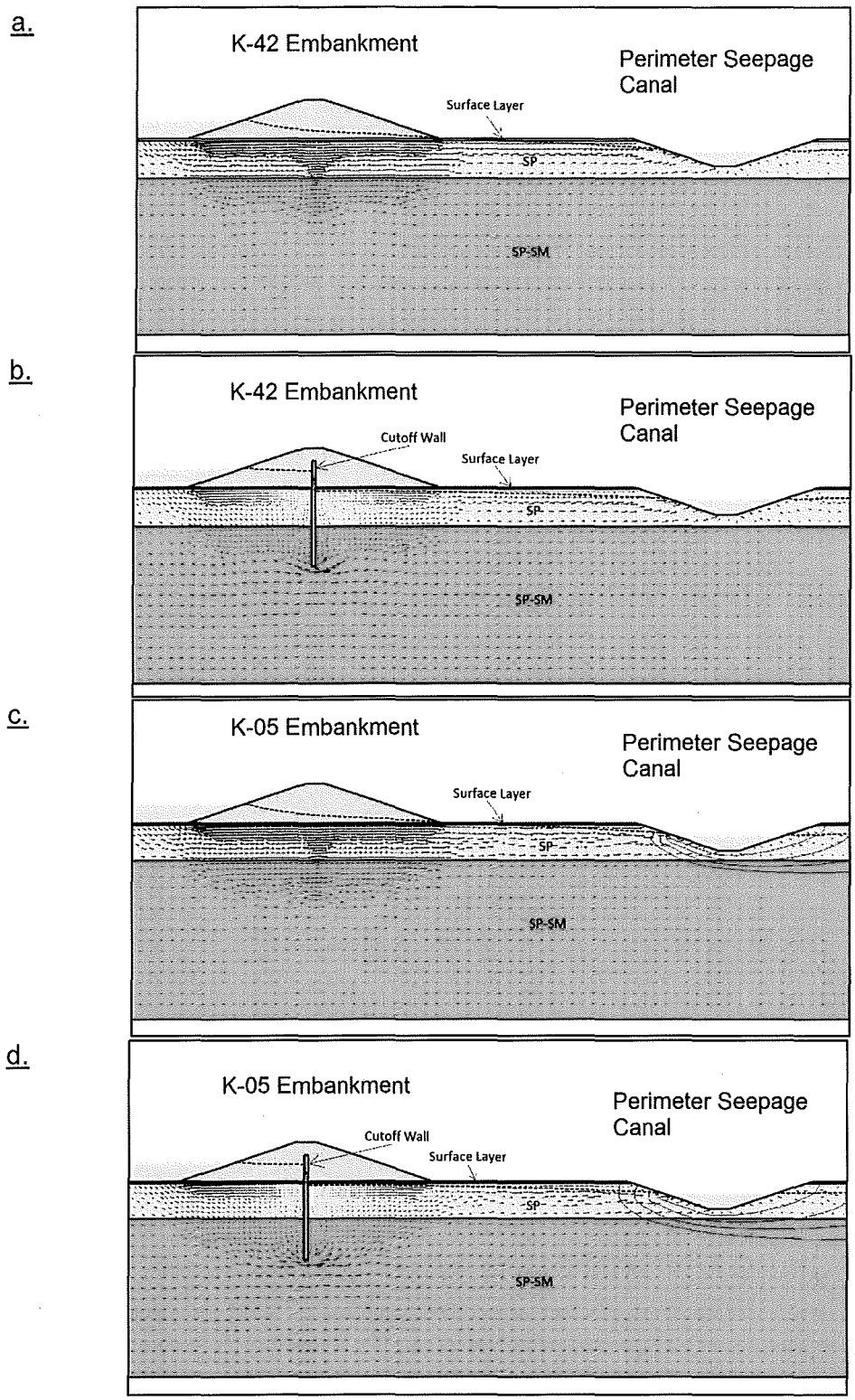

Figure 4. Modeled seepage cross-sections: a, K-42 without cut-off wall; b, K-42 with cutoff wall; c, K-05 without cutoff wall; d, K-05 with cutoff wall. All sections show a 15ft pool depth.

8. Results. Using the hydraulic conductivities, modeled features, and water surface elevations discussed above, the following seepage rates were determined by SEEP/W:

SEEP/W Analysis: K-42 Site, South Cross-Section

	No Cutoff Wall		
Pool Depth (ft)	5	10	15
Seepage loss through the perimeter embankment/foundation (cfs)*	362	494	638
Seepage into the exterior seepage canal (cfs)*	333	451	552
Seepage beyond the seepage canal (cfs)*	29	43	86

SEEP/W Analysis: K-42 Site, South Cross-Section

	With Cutoff Wall (60ft deep)		
Pool Depth (ft)	5	10	15
Seepage loss through the perimeter embankment/foundation (cfs)*	254	345	438
Seepage into the exterior seepage canal (cfs)*	231	312	392
Seepage beyond the seepage canal (cfs)*	22	33	46

*Using a perimeter length of 21.16 miles

SEEP/W Analysis: K-05 Site, South Cross-Section

	No Cutoff Wall		
Pool Depth (ft)	5	10	15
Seepage loss through the perimeter embankment/foundation (cfs)*	278	427	592
Seepage into the exterior seepage canal (cfs)*	224	323	399
Seepage beyond the seepage canal (cfs)*	54	104	193

SEEP/W Analysis: K-05 Site, South Cross-Section

	With Cutoff Wall (60ft deep)		
Pool Depth (ft)	5	10	15
Seepage loss through the perimeter embankment/foundation (cfs)*	189	284	378
Seepage into the exterior seepage canal (cfs)*	145	217	290
Seepage beyond the seepage canal (cfs)*	44	66	89

*Using a perimeter length of 21.33 miles

The range of seepage losses are similar at both reservoir sites. Without a cutoff wall, seepage losses range between 362 and 638 cfs at the K-42 site, and between 278 and 592 cfs at the K-05 site. With a cutoff wall, seepage losses are reduced by approximately one-third and range between 254 and 438 cfs at K-42, and between 189 and 378 cfs at K-05. The largest seepage loss occurs at the deepest pool depth of 15 feet.

9. Conclusions. The hydraulic conductivity values from the NRCS soil survey map and the constant head gravity tests closely correlate with published values for the soils encountered by the present and past subsurface investigations. It is therefore recommended that these values be used in subsequent planning analyses for the project supplemented by additional investigations during the design phase. As DRI data set is not yet complete, the data from that portion of the current fieldwork was not used in the 2D seepage analysis discussed above. Once the fieldwork is complete, the double ring infiltrometer data will be revisited and incorporated (if possible) into the design of the project.

10. Point of Contact. Any questions or comments regarding this MFR should be addressed to: Michael W. Viessman, P.E., (904) 232-1969, Michael.W.Viessman@usace.army.mil; or June E. Mirecki, Ph.D., P.G. (904) 232-1236, June.E.Mirecki@usace.army.mil.

DENNIS J. ZEVENEY, P.E.
Chief, Geotechnical Branch

Appendix A
(Data Tables)

Lake Okeechobee Watershed Project: Constant Head Gravity Test Data/Results
K-42 Site

All Casing Diameter: 2" (O.D.) Sch 40 PVC
All Boring Diameter: 8" (O.D.) Flighted, steel auger

			Column A	Column B	Column C	Column D
			k_y (cm/s)	Anisotropy (k_x/k_y)	k_x (cm/s)	k_x (cm/s) from USBR DS-13(8) Figure 8.3.2.3.1-1
CP17-CH-0013	Test Interval (feet BGS)	Soil Classification				
	10-12	SP	0.001	10	0.01	0.075
	23-25	SP	0.001	10	0.01	0.05
	32-34	SM	0.017	10	0.17	0.01
CP17-CH-0020	Test Interval (feet BGS)	Soil Classification				
	3-5	SP	---	---	---	0.05
	13-15	SM	0.002	10	0.02	0.01
	28-30	SP	0.005	10	0.05	0.05
CP17-CH-0019	Test Interval (feet BGS)	Soil Classification				
	8-10	SP	0.000	10	0.004	0.05
	8-10 (S)	SP	0.011	10	0.11	0.05
	18-20	SM	0.001	10	0.01	0.01
	28-30	SP	0.007	10	0.07	0.05
	(S) = second run					
CP17-CH-0018	Test Interval (feet BGS)	Soil Classification				
	3-5	SM	---	---	---	0.01
	21-23	SP	0.001	10	0.01	0.075
CP17-CB-0051	Test Interval (feet BGS)	Soil Classification				
	3-5	SM	---	---	---	0.01
	10-12	SP	0.008	10	0.08	0.05
	26.5-28.5	SC	0.0003	10	0.003	0.001
CP17-CH-0023	Test Interval (feet BGS)	Soil Classification				
	5-7	SP-SM	---	---	---	0.03
	19-21	SP	0.010	10	0.10	0.05
	28-30	SP	0.002	10	0.02	0.05

Close correlation
BGS = below ground surface
N/C = no contact

Sum (K-42)	0.68
Ave (K-42)	0.049 (cm/s)

Table A1: Constant Head Gravity Test Data/Results, K-42 Site

Lake Okeechobee Watershed Project: Constant Head Gravity Test Data/Results
K-05 Site

All Casing Diameter: 2" (O.D.) Sch 40 PVC
All Boring Diameter: 8" (O.D.) Flighted, steel auger

			Column A	Column B	Column C	Column D
			k_y (cm/s)	Anisotropy (k_x/k_y)	k_x (cm/s)	k_x (cm/s) from USBR DS-13(8) Figure 8.3.2.3.1-1
CP17-CH-0042	Test Interval (feet BGS)	Soil Classification				
	7-9	SC	0.003	10	0.03	0.001
	19-21	SP	0.015	10	0.15	0.05
	27-29	SM	0.001	10	0.01	0.01
CP17-CH-0043	Test Interval (feet BGS)	Soil Classification				
	5-7	SP	0.001	10	0.01	0.05
	10-12	SP	0.001	10	0.01	0.05
	17-19	SP	0.002	10	0.02	0.05
CP17-CH-0044	Test Interval (feet BGS)	Soil Classification				
	5-7	SC	0.015	10	0.15	0.001
	12-14	SP	0.002	10	0.02	0.05
	21-22	SP	0.005	10	0.05	0.05
CP17-CH-0045	Test Interval (feet BGS)	Soil Classification				
	11-13	SP	0.001	10	0.01	0.05
	20.5-22.5	SP	0.011	10	0.11	0.05
	26-28	SM	0.006	10	0.06	0.01
CP17-CB-0046	Test Interval (feet BGS)	Soil Classification				
	8-10	SP	0.023	10	0.23	0.05
	15-17	SP	0.001	10	0.01	0.05
	25-27	SP	0.001	10	0.01	0.05
CP17-CH-0048	Test Interval (feet BGS)	Soil Classification				
	2-4	SC	---	---	---	0.001
	12-14	SP	0.008	10	0.08	0.075
	25-27	SC	0.0003	10	0.003	0.001
CP17-CH-0049	Test Interval (feet BGS)	Soil Classification				
	10-12	SP	0.001	10	0.01	0.05
	23-25	SC	0.008	10	0.08	0.001
	28-30	CL	0.0002	10	0.002	0.000003

Close correlation

BGS = below ground surface
N/C = no contact

Sum (K-05)	1.07
Ave (K-05)	0.053 (cm/s)

Table A2: Constant Head Gravity Test Data/Results, K-05 Site