ATTACHMENT G-3A: STRUCTURAL DESIGN

Additional Info/Revision
Received by VMRC December 26, 2019 /lra

STATE	FEDERAL AID ROUTE	FEDERAL AID PROJECT	STATE ROUTE	STATE PROJECT	SHEET NO.
VA.	—	NHPP-5A03(992)	64	0064-M06-033-501.	

Notes:

Span length measured along baseline of EB bridge.

Shading impacts and temporary impacts not depicted (reference joint permit application impact plates).

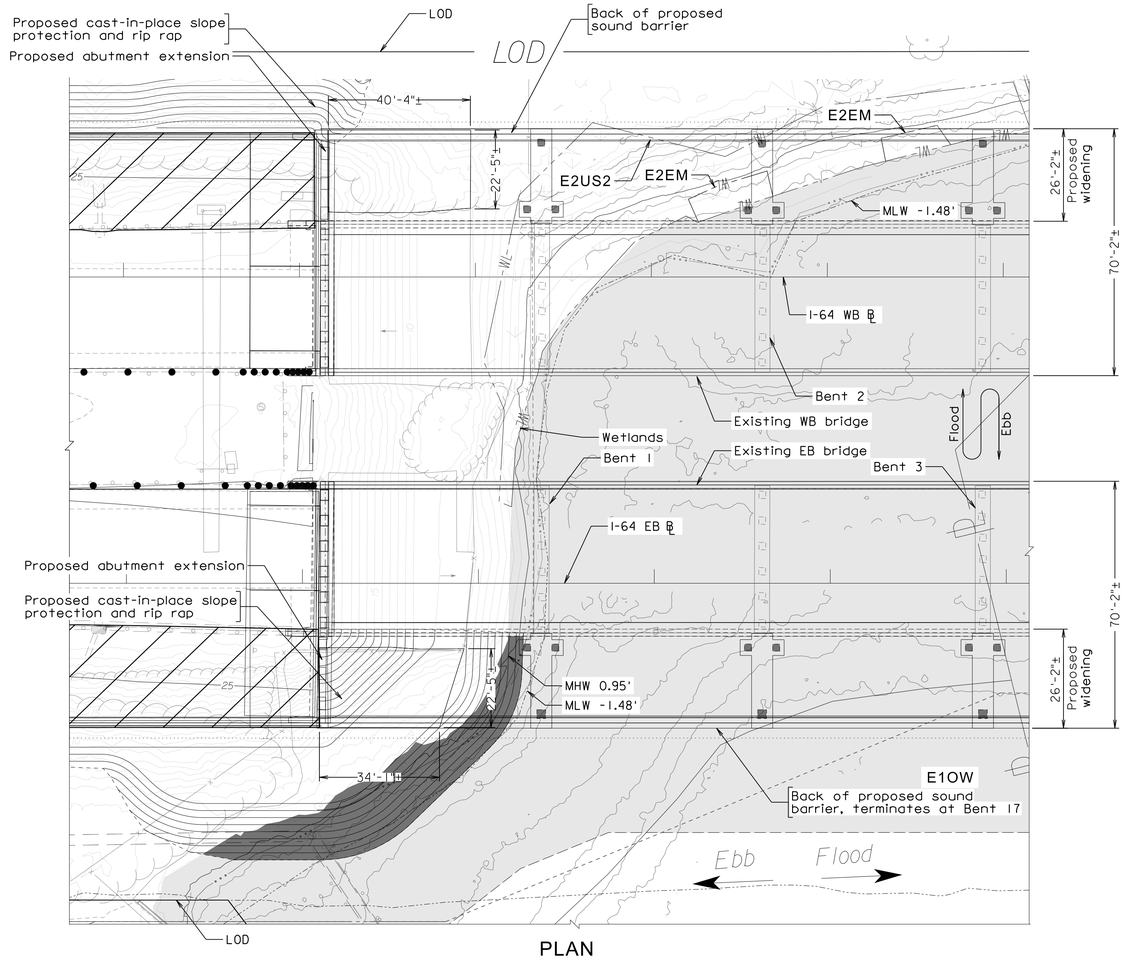

PLAN

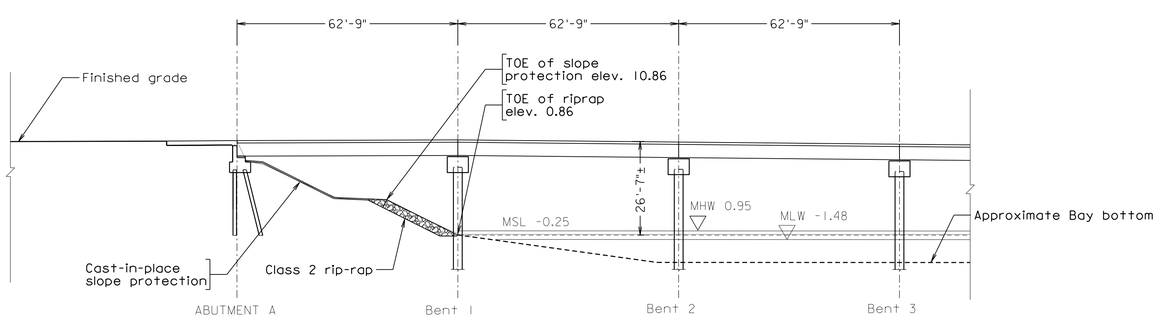

DEVELOPED SECTION ALONG EBL RIGHT CURB LINE

(Developed section along I-64 WBL ℄ not shown)

Legend

- Wetland Limits
- Wetland Impact
- Wetland Area
- Estuarine Open Water

Abbreviations

PEM - *Palustrine Emergent Wetland*	E2EM - *Estuarine Emergent Wetland*
PFO - *Palustrine Forested Wetland*	E2RF - *Estuarine Reef*
PSS - *Palustrine Scrub/Shrub Wetland*	E2FO - *Estuarine Forested Wetland*
PUB - *Palustrine Unconsolidated Bottom*	R2 - *Riverine - Lower Perennial*
E1OW - *Estuarine Open Water*	R4 - *Riverine - Intermittent*
E2SS - *Estuarine Scrub/Shrub Wetland*	R6 - *Riverine - Ephemeral*
E2US2 - *Estuarine Unconsolidated Shore- Sand*	
E2US3 - *Estuarine Unconsolidated Shore- Mud*	

Scale: 1"=20'-0"

PRELIMINARY PLANS
THESE PLANS NOT TO BE USED FOR CONSTRUCTION OR THE ACQUISITION OF RIGHT OF WAY

© 2019, Commonwealth of Virginia

FINAL PLAN REVISIONS SUBMITTAL DATE:

NO.	DATE	AUTH.	DESCRIPTION	NO.	DATE	AUTH.	DESCRIPTION

HRBT EXPANSION | HAMPTON ROADS CONNECTOR PARTNERS | 64 HDR | MOTT MACDONALD Design Joint Venture

Designed: DS
Drawn: MH
Checked: KL

STRUCTURE AND BRIDGE DIVISION
DATE: .....

JPA - WILLOUGHBY BAY
NORTH SHORE
GENERAL PLAN AND ELEVATION

Plan No. 202-02A
Sheet No. S18

ProjectWise File Location: \\
Plotted by: MHOSSAIN
Date & Time: Thursday, November 14, 2019 03:31:29 PM

PenTable:bfull.tbl
Plot Driver :Bridge Local PDF File Generator.pltcfg

b1105770I-North Shore

Additional Info/Revision
Received by VMRC December 26, 2019 /lra

STATE	FEDERAL AID ROUTE	FEDERAL AID PROJECT	STATE ROUTE	STATE PROJECT	SHEET NO.
V-.	—	NHPP-5A03(992)	64	0064-M06-033-501.	

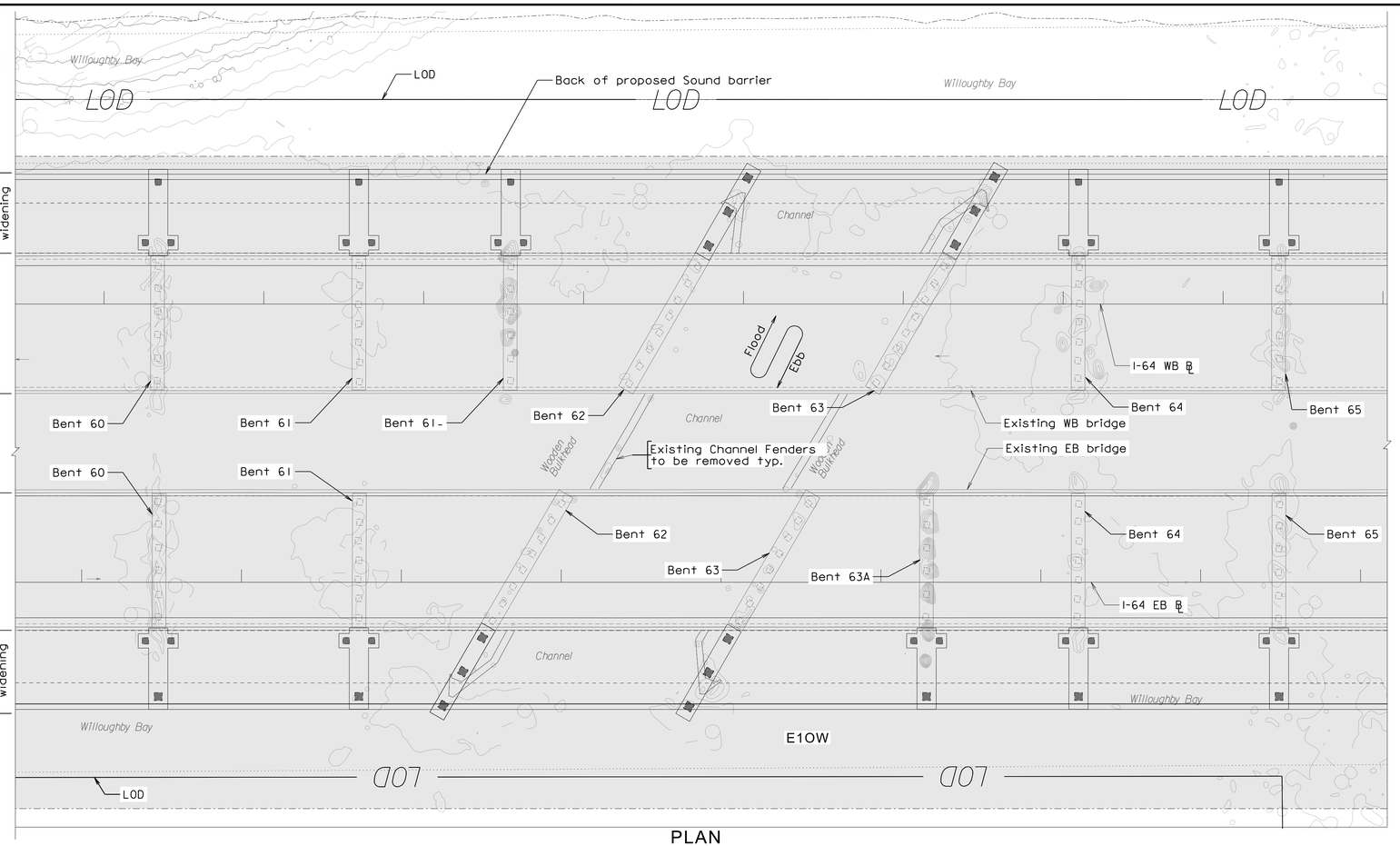

PLAN

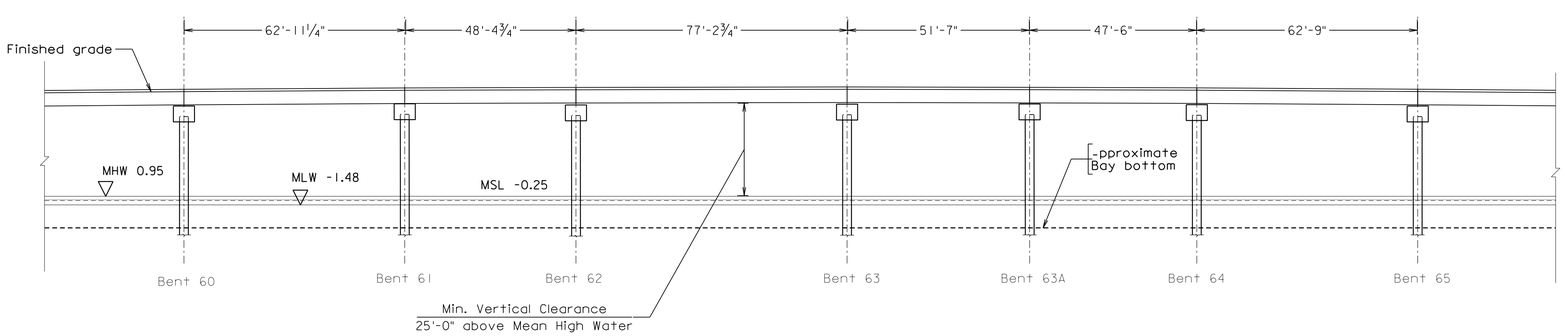

DEVELOPED SECTION ALONG EBL RIGHT CURB LINE

(Developed section along I-64 WBL ℄ not shown)

Legend

- -WL- —— Wetland Limits
- Wetland Impact
- Wetland Area
- Estuarine Open Water

Abbreviations

PEM - Palustrine Emergent Wetland	E2EM - Estuarine Emergent Wetland
PFO - Palustrine Forested Wetland	E2RF - Estuarine Reef
PSS - Palustrine Scrub/Shrub Wetland	E2FO - Estuarine Forested Wetland
PUB - Palustrine Unconsolidated Bottom	R2 - Riverine - Lower Perennial
E1OW - Estuarine Open Water	R4 - Riverine - Intermittent
E2SS - Estuarine Scrub/Shrub Wetland	R6 - Riverine - Ephemeral
E2US2 - Estuarine Unconsolidated Shore- Sand	
E2US3 - Estuarine Unconsolidated Shore- Mud	

Notes:

Span length measured along baseline of EB bridge.

Shading impacts and temporary impacts not depicted (reference joint permit application impact plates).

Scale: 1"=20'-0"

PRELIMIN-RY PL-NS
THESE PL-NS NOT TO BE USED FOR CONSTRUCTION OR THE -CQUISITION OF RIGHT OF W-Y

© 2019, Commonwealth of Virginia

FINAL PLAN REVISIONS SUBMITTAL DATE:

NO.	DATE	AUTH.	DESCRIPTION	NO.	D-TE	AUTH.	DESCRIPTION

HRBT EXPANSION | HAMPTON ROADS CONNECTOR PARTNERS | 64 HDR | MOTT MACDONALD | Design Joint Venture

Designed: DS
Drawn: MH
Checked: KL

STRUCTURE -ND BRIDGE DIVISION
DATE: .....

I-64 - WILLOUGHBY BAY NAVIGATION CHANNEL GENERAL PLAN AND ELEVATION

Plan No. 202-02A

Sheet No. S19

ProjectWise File Location: \\
Plotted by: MHOSSAIN
Date & Time: Thursday, November 14, 2019 03:31:53 PM

PenTable:bfull.tbl
Plot Driver :Bridge Local PDF File Generator.pltcfg

b11057701-Navigation Channel General Plan and Elevations

Additional Info/Revision
Received by VMRC December 26, 2019 /lra

STATE	FEDERAL AID ROUTE	FEDERAL AID PROJECT	STATE ROUTE	STATE PROJECT	SHEET NO.
VA.	—	NHPP-5A03(992)	64	0064-M06-033-501.	

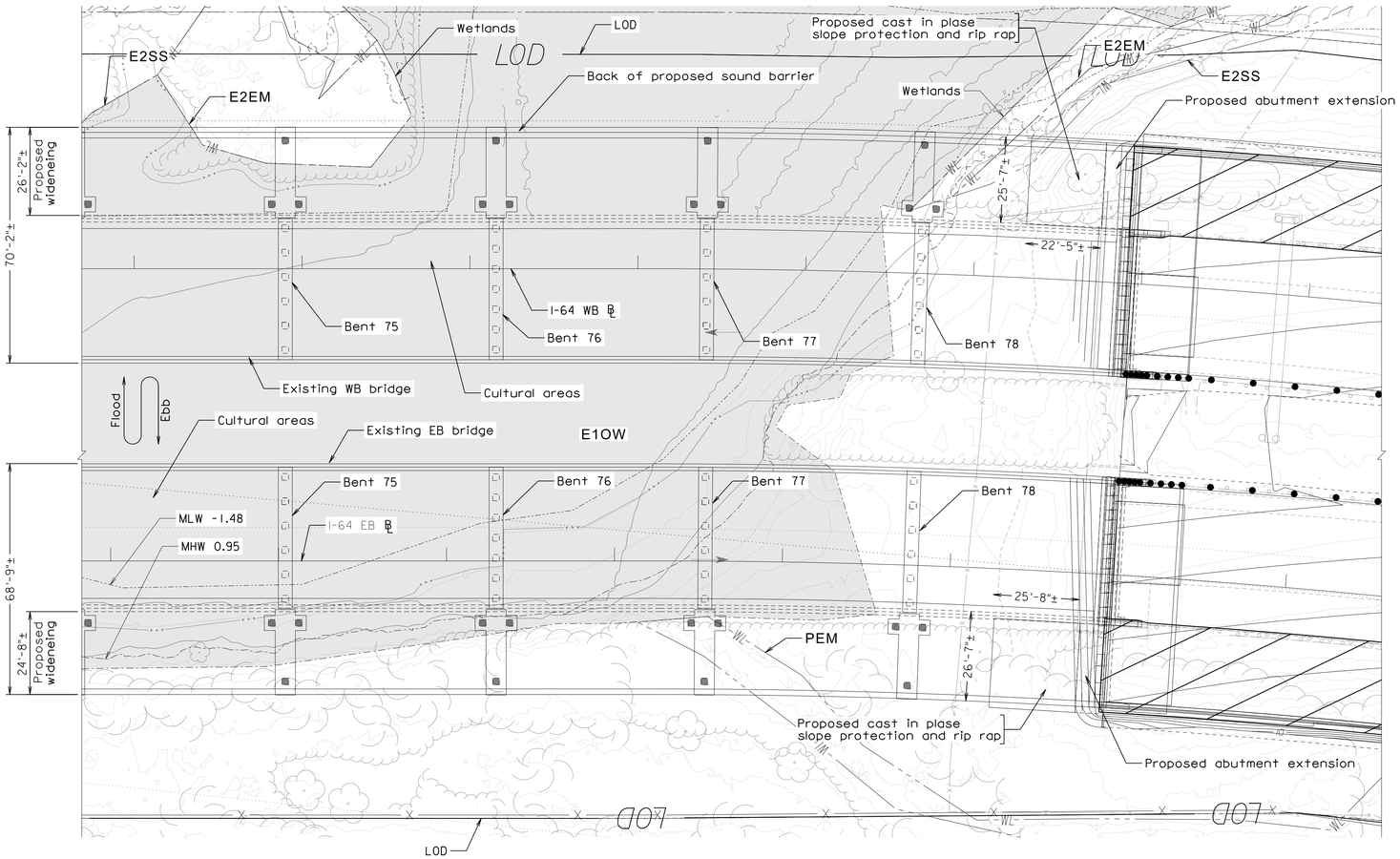

PLAN

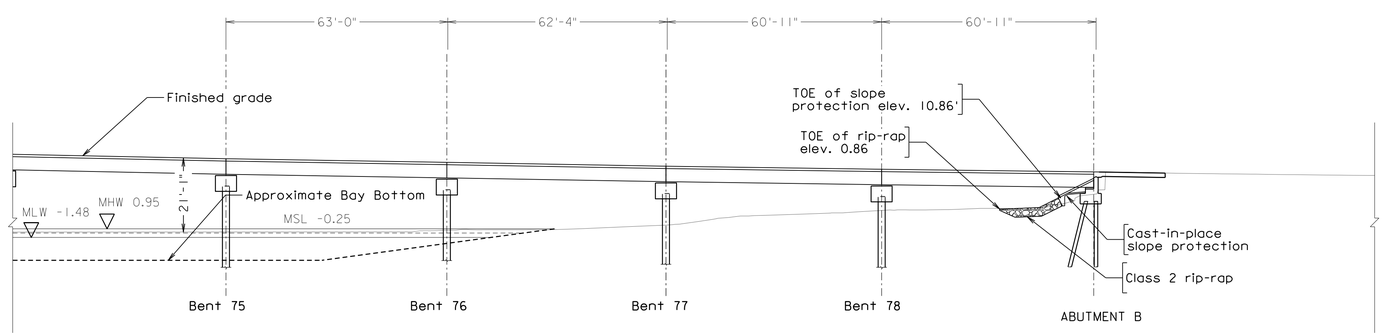

DEVELOPED SECTION ALONG EBL RIGHT CURB LINE

(DEVELOPED SECTION ALONG I-64 WBL ℄ NOT SHOWN)

Legend

- -WL- — Wetland Limits
- Wetland Impact
- Wetland Area
- Estuarine Open Water

Abbreviations

PEM - *Palustrine Emergent Wetland*	E2EM - *Estuarine Emergent Wetland*
PFO - *Palustrine Forested Wetland*	E2RF - *Estuarine Reef*
PSS - *Palustrine Scrub/Shrub Wetland*	E2FO - *Estuarine Forested Wetland*
PUB - *Palustrine Unconsolidated Bottom*	R2 - *Riverine - Lower Perennial*
E1OW - *Estuarine Open Water*	R4 - *Riverine - Intermittent*
E2SS - *Estuarine Scrub/Shrub Wetland*	R6 - *Riverine - Ephemeral*
E2US2 - *Estuarine Unconsolidated Shore- Sand*	
E2US3 - *Estuarine Unconsolidated Shore- Mud*	

Notes:

Span length measured along baseline of EB bridge.

Shading impacts and temporary impacts not depicted (reference joint permit application impact plates).

Scale: 1"=20'-0"

PRELIMINARY PLANS
THESE PLANS NOT TO BE USED FOR CONSTRUCTION OR THE ACQUISITION OF RIGHT OF WAY

© 2019, Commonwealth of Virginia

FINAL PLAN REVISIONS SUBMITTAL DATE:

NO.	DATE	AUTH.	DESCRIPTION	NO.	DATE	AUTH.	DESCRIPTION

HRBT EXPANSION | HAMPTON ROADS CONNECTOR PARTNERS | 64 HDR | MOTT MACDONALD Design Joint Venture

Designed: DS
Drawn: MH
Checked: KL

STRUCTURE AND BRIDGE DIVISION
DATE:

JPA - WILLOUGHBY BAY
SOUTH SHORE
GENERAL PLAN AND ELEVATIONS

Plan No. 202-02A
Sheet No. S20

PenTable:bfull.tbl
Plot Driver :Bridge Local PDF File Generator.pltcfg

b1105770I-South Shore

ProjectWise File Location: \\
Plotted by: MHOSSAIN
Date & Time: Thursday, November 14, 2019 03:32:15 PM

Additional Info/Revision
Received by VMRC December 26, 2019 /lra

STATE	FEDERAL AID ROUTE	FEDERAL AID PROJECT	STATE ROUTE	STATE PROJECT	SHEET NO.
V-.	—	NHPP-5A03(992)	64	0064-M06-033-501.	

Note:

Sound Barrier height is subject to change pending the results of the Final Design -nalysis.

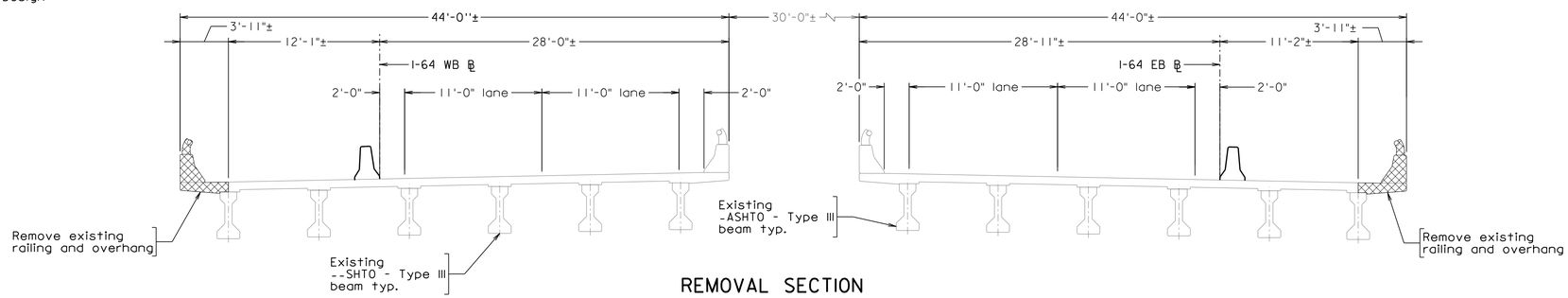

REMOVAL SECTION

Scale : 3/16" = 1'-0"

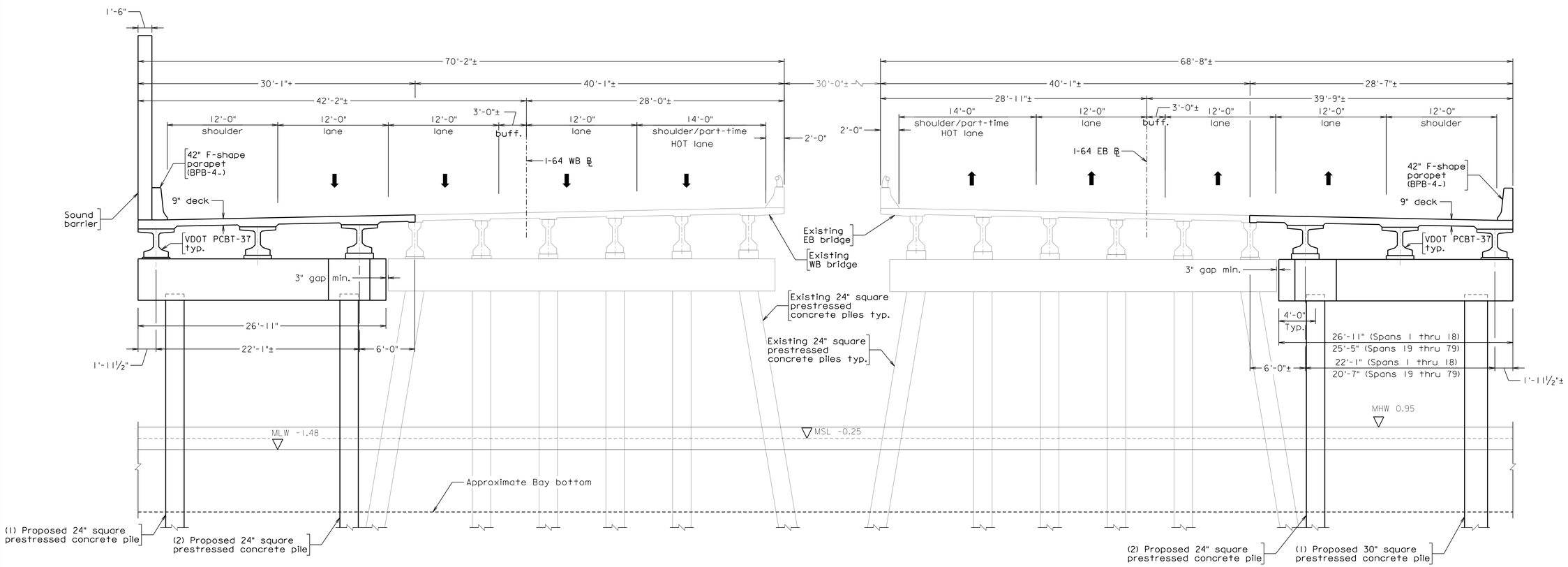

PROPOSED TYPICAL CROSS SECTION

Scale : 3/16" = 1'-0"

PRELIMIN-RY PL-NS
THESE PL-NS NOT TO BE USED FOR CONSTRUCTION OR THE -CQUISITION OF RIGHT OF W-Y

© 2019, Commonwealth of Virginia

FINAL PLAN REVISIONS SUBMITTAL DATE:

NO.	DATE	AUTH.	DESCRIPTION	NO.	D-TE	AUTH.	DESCRIPTION

HRBT EXPANSION | HAMPTON ROADS CONNECTOR PARTNERS | 64 HDR | MOTT MACDONALD Design Joint Venture

Designed: DS
Drawn: MH
Checked: KL

STRUCTURE -ND BRIDGE DIVISION
DATE: .....

I-64 WILLOUGHBY BAY
TYPICAL CROSS SECTION

Plan No. 202-02A
Sheet No. S21

ProjectWise File Location: \\
Plotted by: MHOSSAIN
Date & Time: Thursday, November 14, 2019 03:32:25 PM

PenTable:bfull.tbl
Plot Driver :Bridge Local PDF File Generator.pltcfg

b110577-Typical Cross Section

Additional Info/Revision
Received by VMRC December 26, 2019 /lra

STATE	FEDERAL AID ROUTE	FEDERAL AID PROJECT	STATE ROUTE	STATE PROJECT	SHEET NO.
V-.	—	NHPP-5A03(992)	64	0064-M06-033-501.	

Note:

1. Sound Barrier height is subject to change pending the results of the Final Design -nalysis.
2. Existing and proposed sections shown here are perpendicular to skew of navigation channel, roadway feature dimensions not shown for clarity.

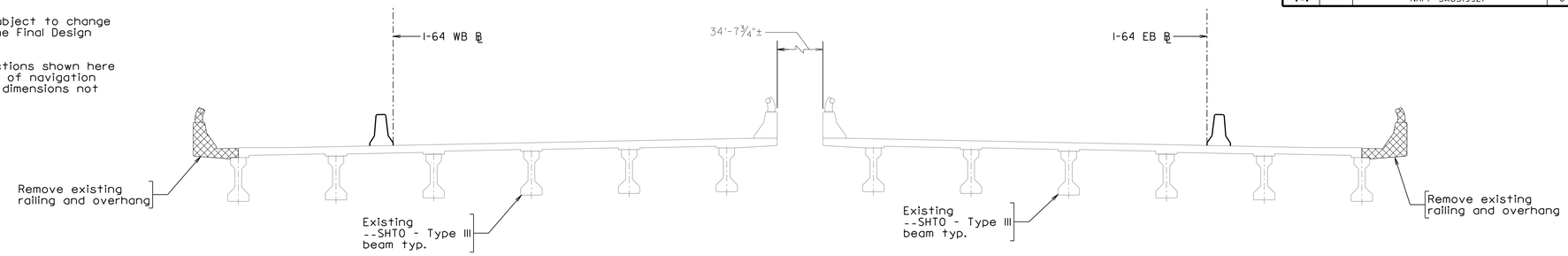

REMOVAL SECTION

Scale : 3/16" = 1'-0"

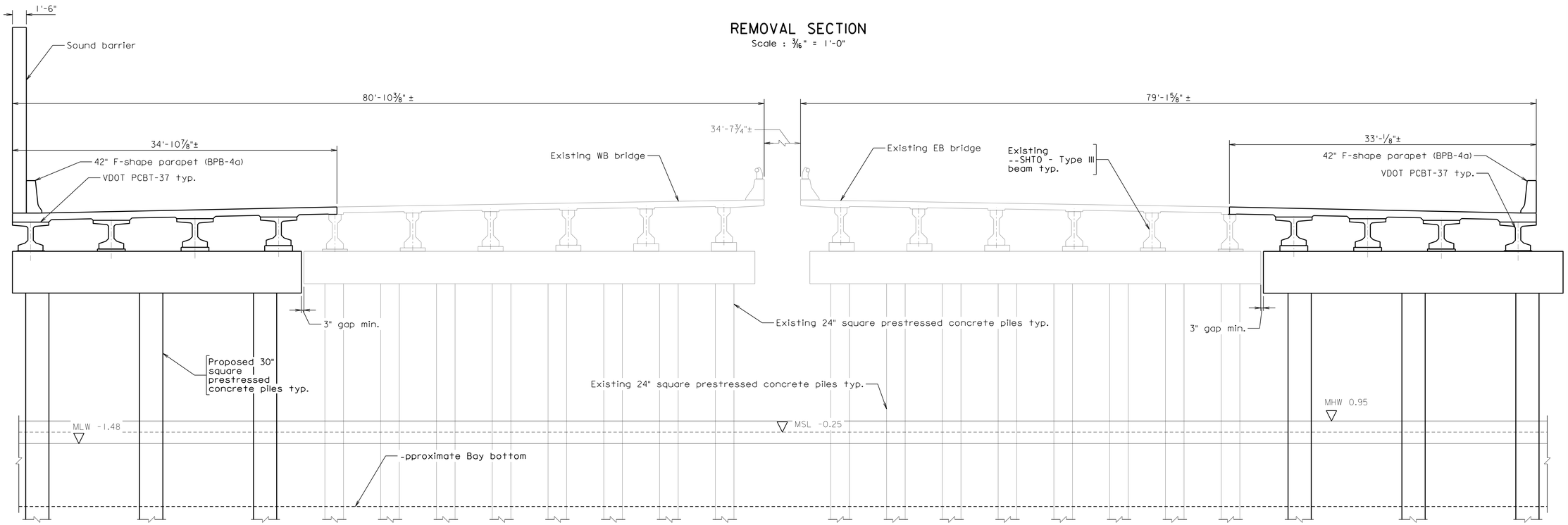

PROPOSED TRANSVERSE SECTION AT NAVIGATION CHANNEL

Scale : 3/16" = 1'-0"

PRELIMIN-RY PL-NS
THESE PL-NS NOT TO BE USED FOR CONSTRUCTION OR THE -CQUISITION OF RIGHT OF W-Y

© 2019, Commonwealth of Virginia

FINAL PLAN REVISIONS SUBMITTAL DATE:

NO.	DATE	AUTH.	DESCRIPTION	NO.	D-TE	AUTH.	DESCRIPTION

HRBT EXPANSION | HAMPTON ROADS CONNECTOR PARTNERS | 64 HDR | MOTT MACDONALD | Design Joint Venture

Designed: DS
Drawn: MH
Checked: KL

STRUCTURE -ND BRIDGE DIVISION
DATE: .....

I-64 - WILLOUGHBY BAY NAVIGATION CHANNEL CROSS SECTION

Plan No. 202-02A
Sheet No. S22

ProjectWise File Location: \\
Plotted by: MHOSSAIN
Date & Time: Thursday, November 14, 2019 03:32:32 PM

PenTable:bfull.tbl
Plot Driver :Bridge Local PDF File Generator.pltcfg

bi10577-Navigation Channel Cross Section

Additional Info/Revision
Received by VMRC December 26, 2019 /lra

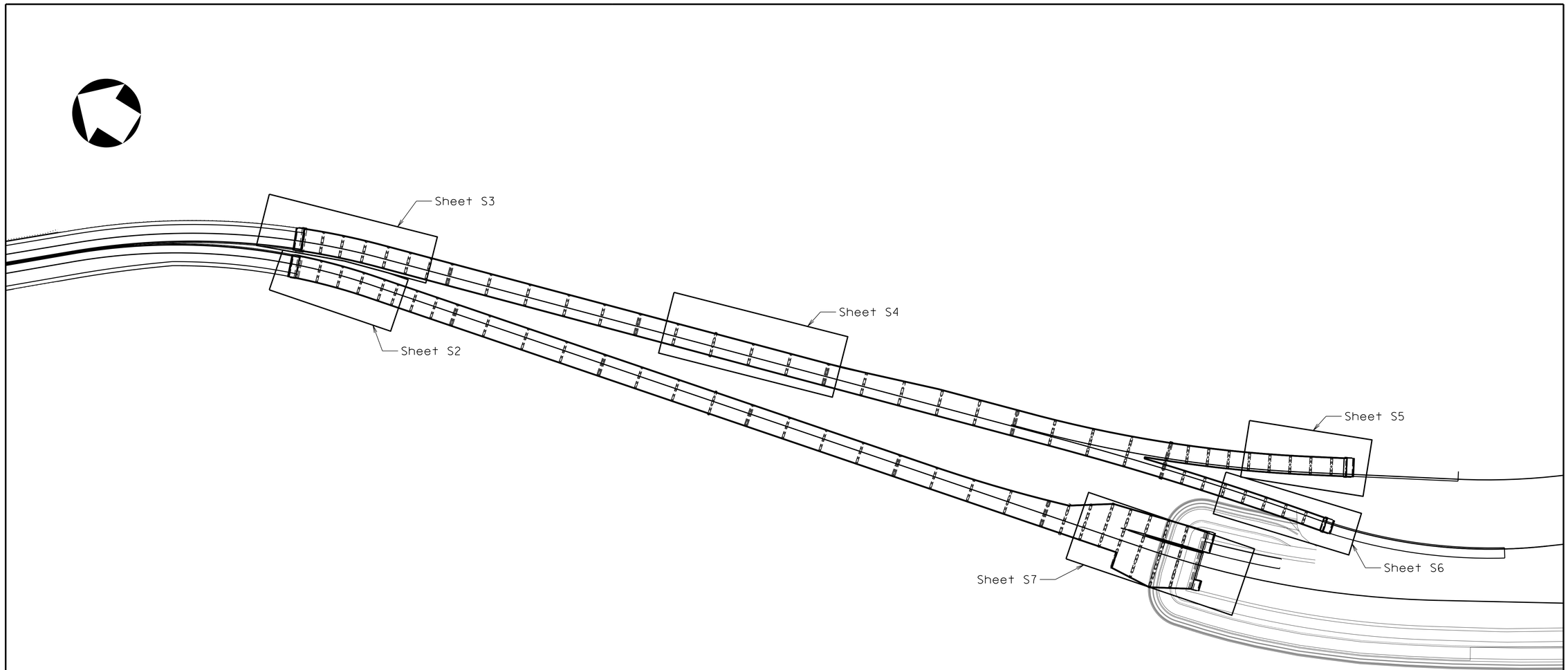

304-68_JPA1

PRELIMIN-RY PL-NS
THESE PL-NS NOT TO BE USED FOR CONSTRUCTION OR THE -CQUISITION OF RIGHT OF W-Y

FINAL PLAN REVISIONS SUBMITTAL DATE:

NO.	DATE	AUTH.	DESCRIPTION	NO.	DATE	AUTH.	DESCRIPTION

HRBT EXPANSION | HAMPTON ROADS CONNECTOR PARTNERS | 64 HDR | MOTT MACDONALD | Design Joint Venture

Designed: .....
Drawn: .....WAN..
Checked: .....

RO-DW-Y DIVISION
DATE: 08-30-19

JPA - NORTH TRESTLE
KEY MAP

Plan No.	Sheet No.
XXX-XX	S1

Additional Info/Revision
Received by VMRC December 26, 2019 /lra

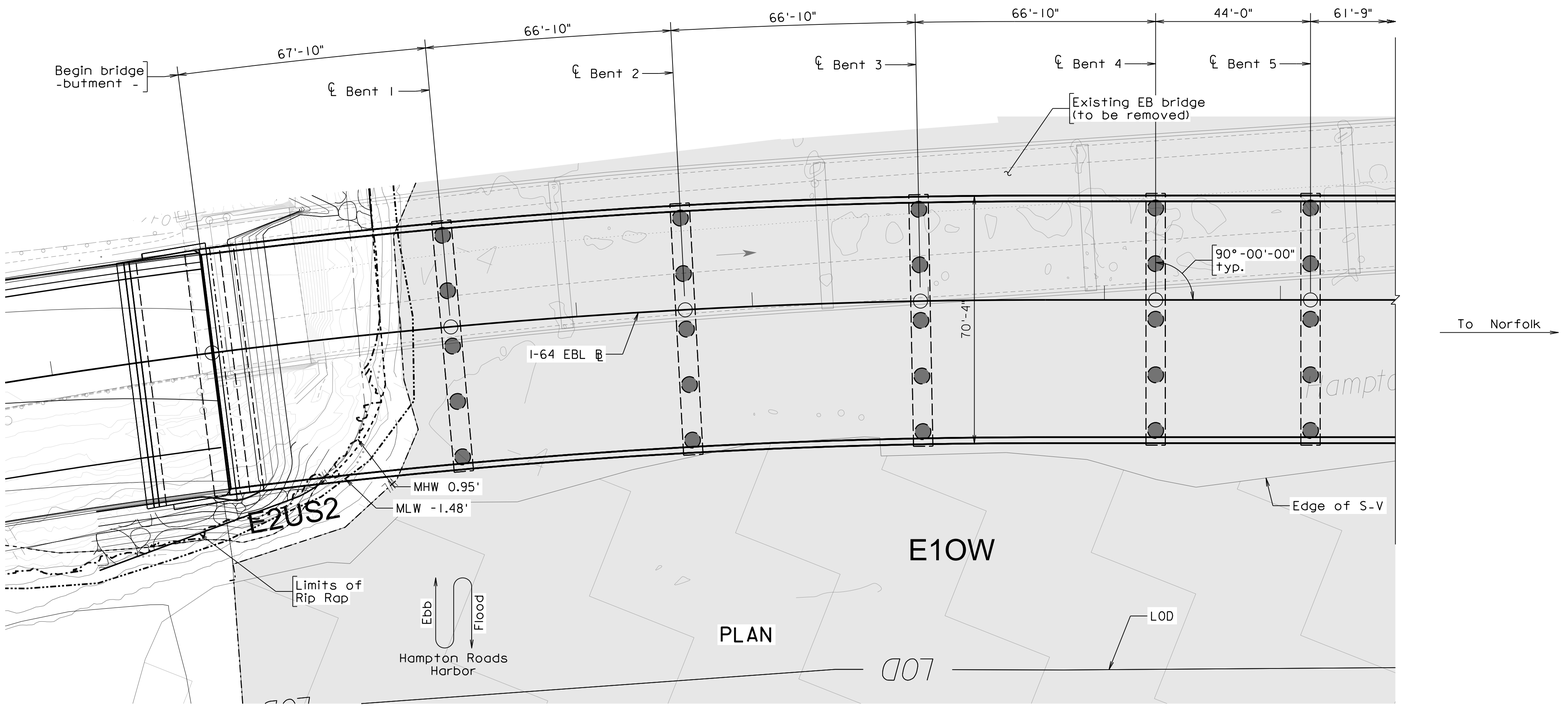

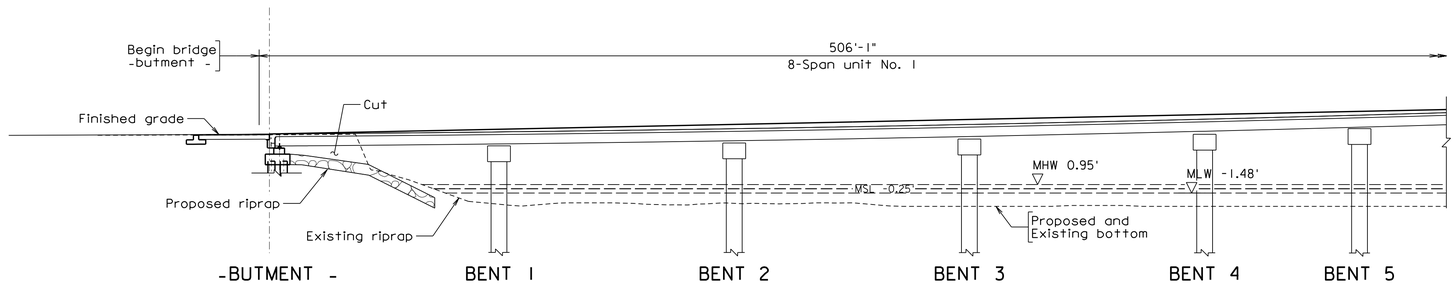

DEVELOPED SECTION ALONG I-64 EBL ℄

Legend

- -WL- Wetland Limits
- Wetland Area
- Estuarine Subtidal Open Water
- Submerged Aquatic Vegetation
- Permanent Wetland Impact

*Shading Impacts and Temporary Impacts not depicted (Reference Joint Permit Application Impact Plates)

Abbreviations

PEM	Palustrine Emergent Wetland	E2EM	Estuarine Intertidal Emergent Marsh
PFO	Palustrine Forested Wetland	E2RF	Estuarine Intertidal Reef
PSS	Palustrine Scrub/Shrub Wetland	E2FO	Estuarine Intertidal Forest
PUB	Palustrine Unconsolidated Bottom	R2	Riverine - Lower Perennial
E1OW	Estuarine Subtidal Open Water	R4	Riverine - Intermittent
E2SS	Estuarine Intertidal Scrub Shrub	R6	Riverine - Ephemeral
E2US2	Estuarine Intertidal Unconsolidated Shore - Sand		
E2US3	Estuarine Intertidal Unconsolidated Shore - Mud		

PRELIMIN-RY PL-NS
THESE PL-NS NOT TO BE USED FOR CONSTRUCTION OR THE -COUISITION OF RIGHT OF W-Y

Scale: 1" = 20'-0"

FINAL PLAN REVISIONS SUBMITTAL DATE:

NO.	DATE	AUTH.	DESCRIPTION	NO.	DATE	AUTH.	DESCRIPTION

HRBT EXPANSION | HAMPTON ROADS CONNECTOR PARTNERS | 64 HDR | MOTT MACDONALD | Design Joint Venture

Designed: CJD
Drawn: RMG
Checked: EMF

RO-DW-Y DIVISION
DATE:

JPA - NORTH TRESTLE
EB NORTH SHORE
GENERAL PLAN AND ELEVATION

Plan No.	Sheet No.
304-68	S2

304-68_JPA2

Additional Info/Revision
Received by VMRC December 26, 2019 /lra

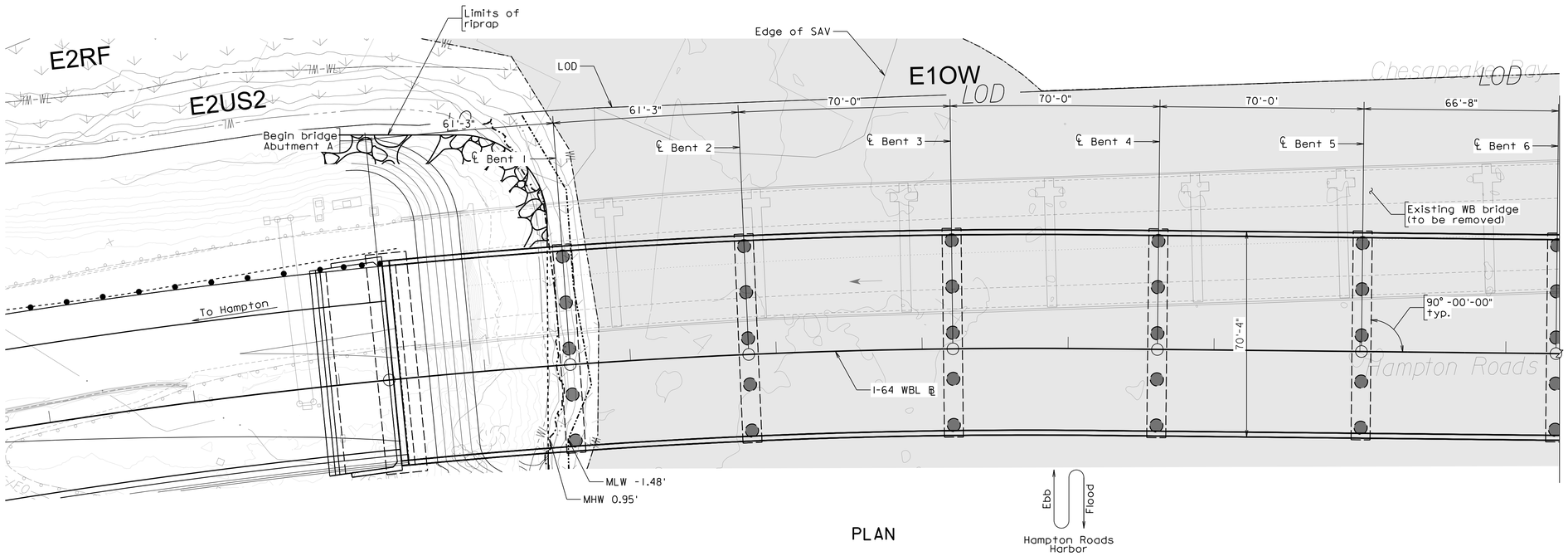

PLAN

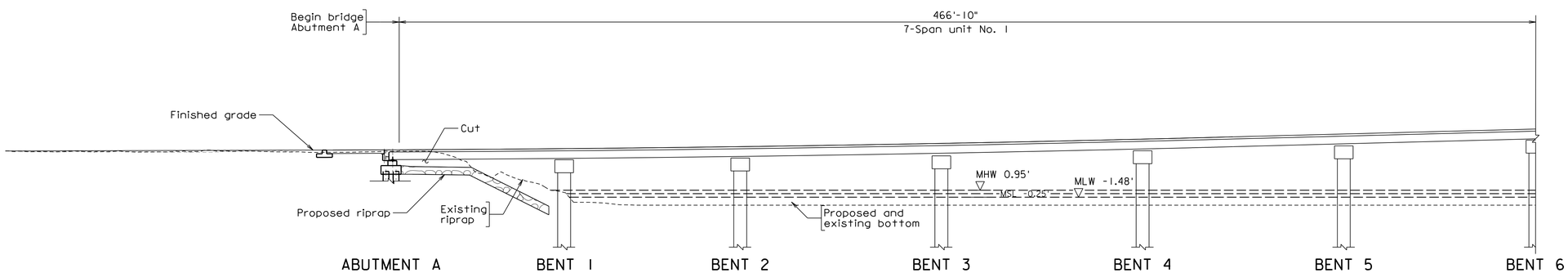

DEVELOPED SECTION ALONG I-64 WBL ℄

Legend

- -WL- Wetland Limits
- Wetland Area
- Estuarine Subtidal Open Water
- Submerged Aquatic Vegetation
- Permanent Wetland Impact

*Shading Impacts and Temporary Impacts not depicted (Reference Joint Permit Application Impact Plates)

Abbreviations

PEM - Palustrine Emergent Wetland
PFO - Palustrine Forested Wetland
PSS - Palustrine Scrub/Shrub Wetland
PUB - Palustrine Unconsolidated Bottom
E1OW - Estuarine Subtidal Open Water
E2SS - Estuarine Intertidal Scrub Shrub
E2US2 - Estuarine Intertidal Unconsolidated Shore - Sand
E2US3 - Estuarine Intertidal Unconsolidated Shore - Mud
E2EM - Estuarine Intertidal Emergent Marsh
E2RF - Estuarine Intertidal Reef
E2FO - Estuarine Intertidal Forest
R2 - Riverine - Lower Perennial
R4 - Riverine - Intermittent
R6 - Riverine - Ephemeral

Scale 1" = 20'-0"

FINAL PLAN REVISIONS SUBMITTAL DATE:

NO.	DATE	AUTH.	DESCRIPTION	NO.	DATE	AUTH.	DESCRIPTION

HRBT EXPANSION | HAMPTON ROADS CONNECTOR PARTNERS | 64 HDR | MOTT MACDONALD | Design Joint Venture

Designed: CJD
Drawn: RMC
Checked: EMF

ROADWAY DIVISION
DATE:

JPA - NORTH TRESTLE
WB NORTH SHORE
GENERAL PLAN AND ELEVATION

Plan No.	Sheet No.
304-68	S3

304-68_JPA3

Additional Info/Revision
Received by VMRC December 26, 2019 /lra

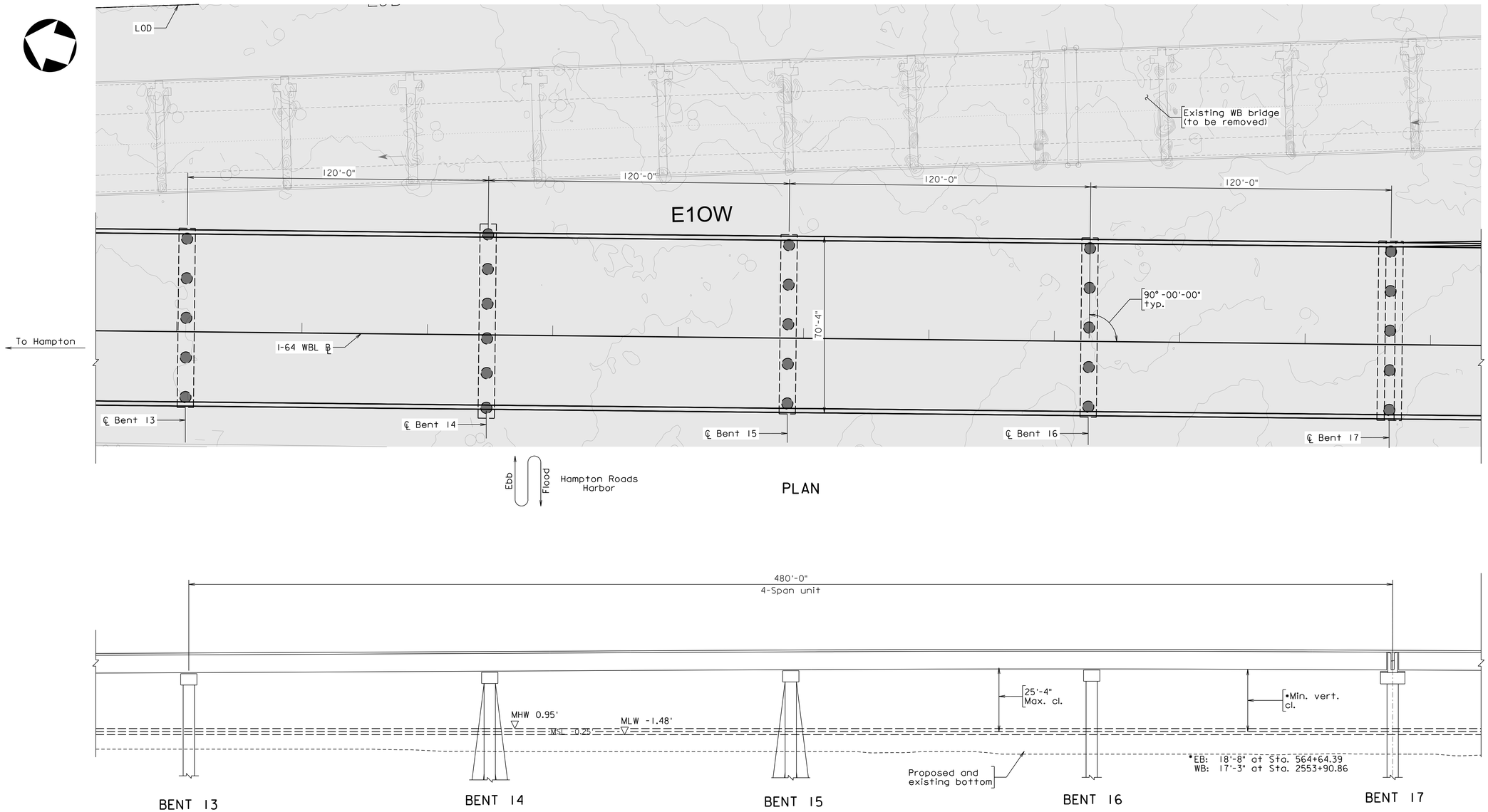

304-68_JPA4

Legend

- -WL- Wetland Limits
- Wetland Area
- Estuarine Subtidal Open Water
- Submerged Aquatic Vegetation
- Permanent Wetland Impact

*Shading Impacts and Temporary Impacts not depicted (Reference Joint Permit Application Impact Plates)

Abbreviations

PEM - Palustrine Emergent Wetland
PFO - Palustrine Forested Wetland
PSS - Palustrine Scrub/Shrub Wetland
PUB - Palustrine Unconsolidated Bottom
E1OW - Estuarine Subtidal Open Water
E2SS - Estuarine Intertidal Scrub Shrub
E2US2 - Estuarine Intertidal Unconsolidated Shore - Sand
E2US3 - Estuarine Intertidal Unconsolidated Shore - Mud
E2EM - Estuarine Intertidal Emergent Marsh
E2RF - Estuarine Intertidal Reef
E2FO - Estuarine Intertidal Forest
R2 - Riverine - Lower Perennial
R4 - Riverine - Intermittent
R6 - Riverine - Ephemeral

DEVELOPED SECTION ALONG I-64 WBL ℄

PRELIMIN-RY PL-NS
THESE PL-NS NOT TO BE USED FOR CONSTRUCTION OR THE -CQUISITION OF RIGHT OF W-Y

Scale 1" = 20'-0"

FINAL PLAN REVISIONS SUBMITTAL DATE:

NO.	DATE	AUTH.	DESCRIPTION	NO.	DATE	AUTH.	DESCRIPTION

HRBT EXPANSION
HAMPTON ROADS CONNECTOR PARTNERS
64 HDR | MOTT MACDONALD Design Joint Venture

Designed: CJD
Drawn: RMG
Checked: EMF
RO-DW-Y DIVISION
DATE:

JPA - NORTH TRESTLE
TYPICAL PLAN AND ELEVATION

Plan No.	Sheet No.
304-68	S4

Additional Info/Revision
Received by VMRC December 26, 2019 /lra

PLAN

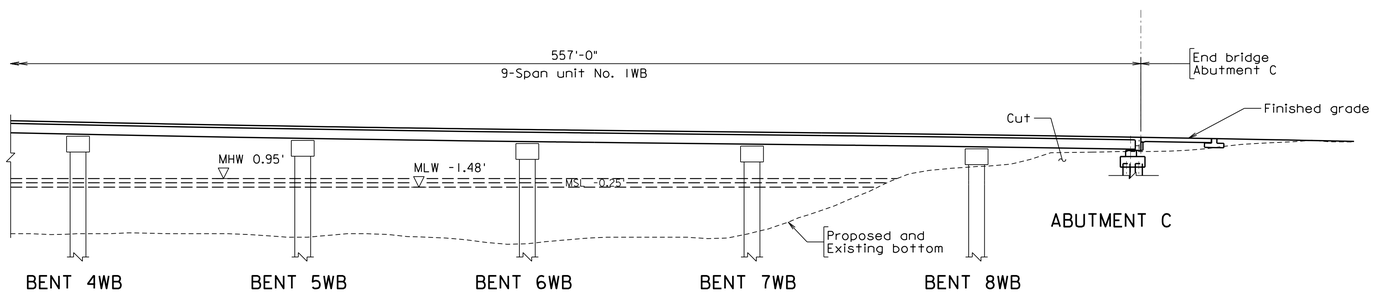

DEVELOPED SECTION ALONG I-64 WBL_N_GP ℄

Legend

- —WL— Wetland Limits
- Wetland Area
- Estuarine Subtidal Open Water
- Submerged Aquatic Vegetation
- Permanent Wetland Impact

*Shading Impacts and Temporary Impacts not depicted (Reference Joint Permit Application Impact Plates)

Abbreviations

PEM	Palustrine Emergent Wetland	E2EM	Estuarine Intertidal Emergent Marsh
PFO	Palustrine Forested Wetland	E2RF	Estuarine Intertidal Reef
PSS	Palustrine Scrub/Shrub Wetland	E2FO	Estuarine Intertidal Forest
PUB	Palustrine Unconsolidated Bottom	R2	Riverine - Lower Perennial
E1OW	Estuarine Subtidal Open Water	R4	Riverine - Intermittent
E2SS	Estuarine Intertidal Scrub Shrub	R6	Riverine - Ephemeral
E2US2	Estuarine Intertidal Unconsolidated Shore - Sand		
E2US3	Estuarine Intertidal Unconsolidated Shore - Mud		

Scale: 1" = 20'

FINAL PLAN REVISIONS SUBMITTAL DATE:

NO.	DATE	AUTH.	DESCRIPTION	NO.	DATE	AUTH.	DESCRIPTION

HRBT EXPANSION | HAMPTON ROADS CONNECTOR PARTNERS | 64 HDR | MOTT MACDONALD | Design Joint Venture

Designed: CJD
Drawn: ESK
Checked: EMF

ROADWAY DIVISION
DATE:

JPA - NORTH TRESTLE
WB NORTH ISLAND
GENERAL PURPOSE
GENERAL PLAN AND ELEVATION

Plan No. 304-68
Sheet No. S5

304-68_JPA5

Additional Info/Revision
Received by VMRC December 26, 2019 /lra

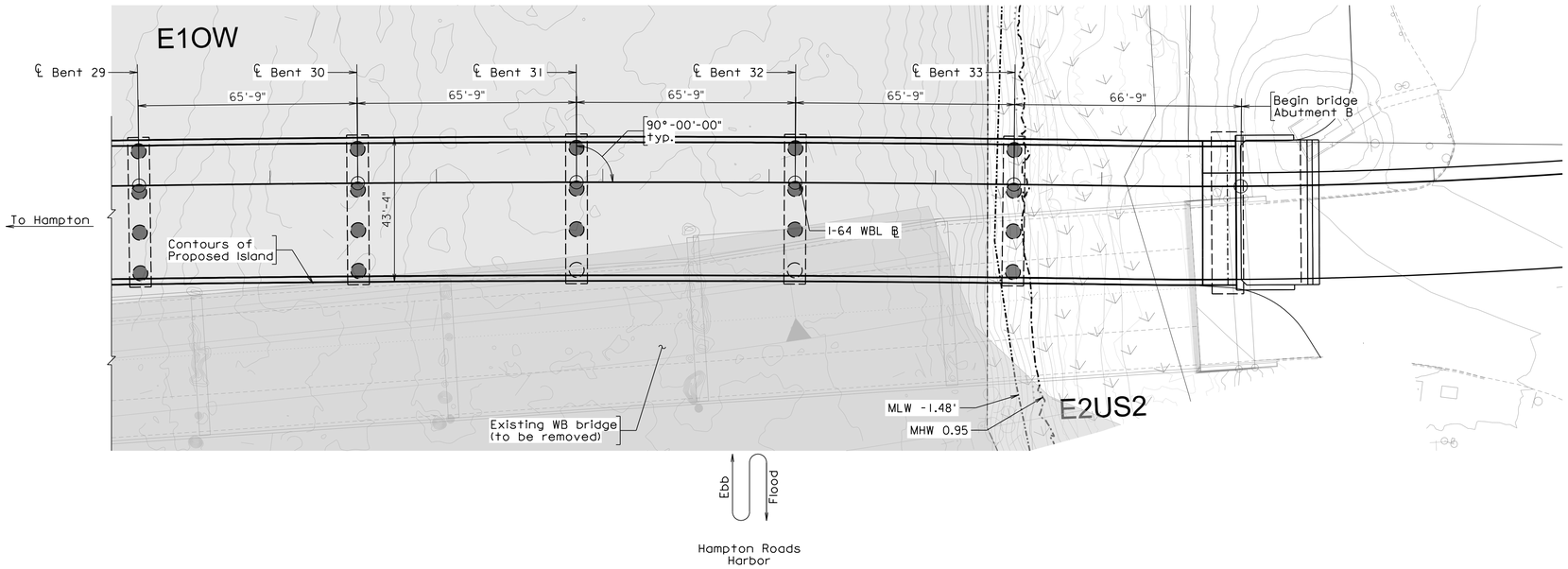

PLAN

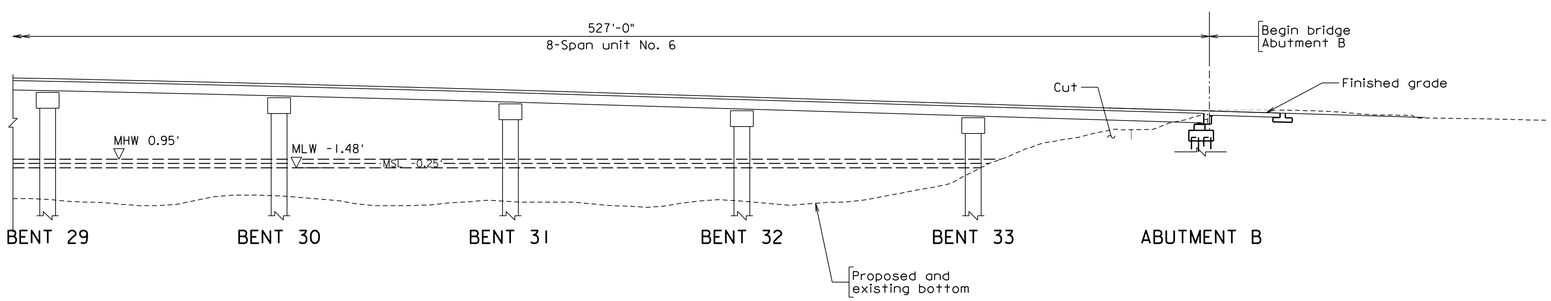

DEVELOPED SECTION ALONG I-64 WBL ℄

Legend

- —WL— Wetland Limits
- Wetland Area
- Estuarine Subtidal Open Water
- Submerged Aquatic Vegetation
- Permanent Wetland Impact

*Shading Impacts and Temporary Impacts not depicted (Reference Joint Permit Application Impact Plates)

Abbreviations

PEM - Palustrine Emergent Wetland
PFO - Palustrine Forested Wetland
PSS - Palustrine Scrub/Shrub Wetland
PUB - Palustrine Unconsolidated Bottom
E1OW - Estuarine Subtidal Open Water
E2SS - Estuarine Intertidal Scrub Shrub
E2US2 - Estuarine Intertidal Unconsolidated Shore - Sand
E2US3 - Estuarine Intertidal Unconsolidated Shore - Mud
E2EM - Estuarine Intertidal Emergent Marsh
E2RF - Estuarine Intertidal Reef
E2FO - Estuarine Intertidal Forest
R2 - Riverine - Lower Perennial
R4 - Riverine - Intermittent
R6 - Riverine - Ephemeral

Scale: 1" = 20'-0"

PRELIMINARY PLANS
THESE PLANS NOT TO BE USED FOR CONSTRUCTION OR THE ACQUISITION OF RIGHT OF WAY

FINAL PLAN REVISIONS SUBMITTAL DATE:

NO.	DATE	AUTH.	DESCRIPTION	NO.	DATE	AUTH.	DESCRIPTION

HRBT EXPANSION
HAMPTON ROADS CONNECTOR PARTNERS
64 HDR | MOTT MACDONALD Design Joint Venture

Designed: CJD
Drawn: RMG
Checked: EMF

ROADWAY DIVISION
DATE:

JPA - NORTH TRESTLE
WB NORTH ISLAND HOT/HOV
GENERAL PLAN AND ELEVATION

Plan No.	Sheet No.
304-68	S6

304-68_JPA6

Additional Info/Revision
Received by VMRC December 26, 2019 /lra

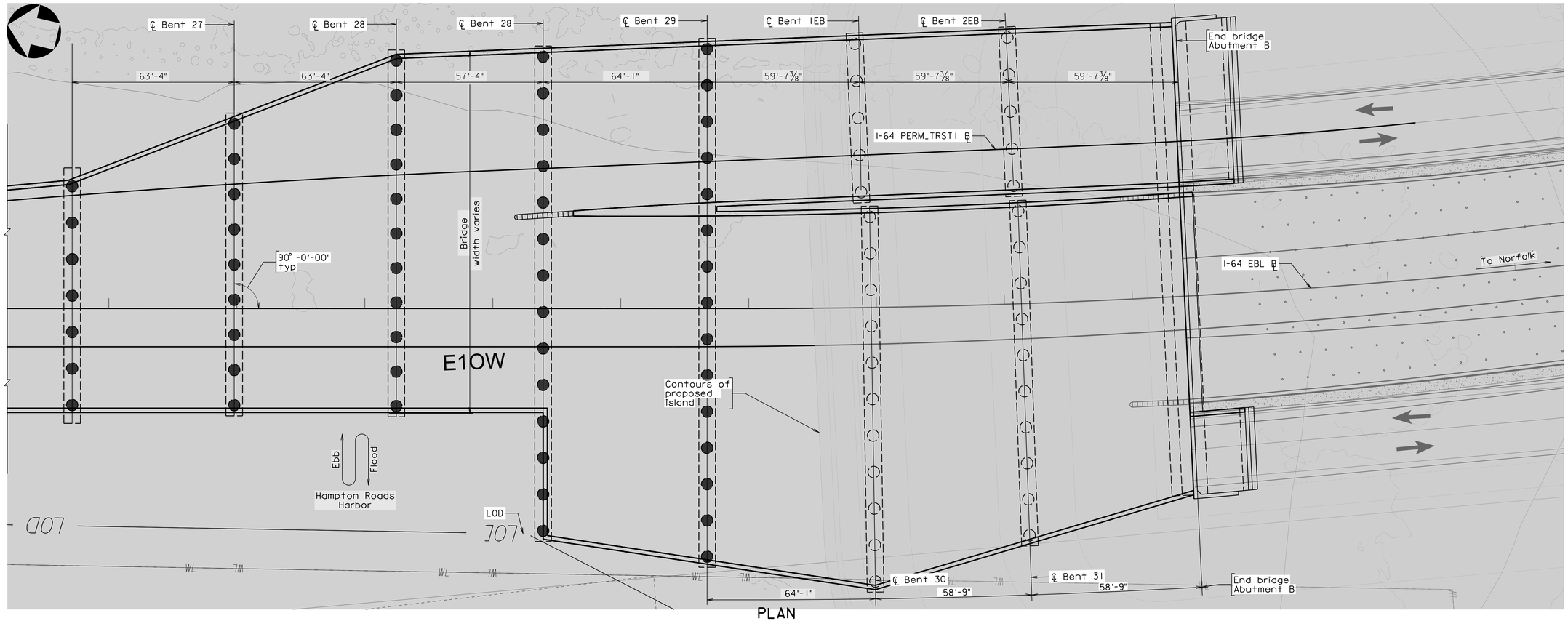

PLAN

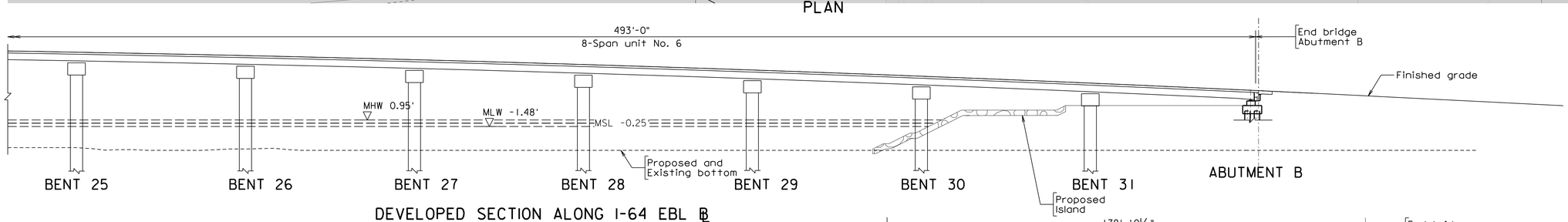

DEVELOPED SECTION ALONG I-64 EBL ℄

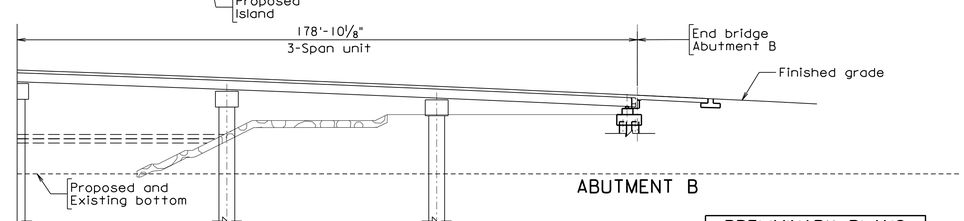

DEVELOPED SECTION ALONG I-64 PERM_TRST1 ℄

Scale: 1" = 20'-0"

Legend

- WL Wetland Limits
- Wetland Area
- Estuarine Subtidal Open Water
- Submerged Aquatic Vegetation
- Permanent Wetland Impact

*Shading Impacts and Temporary Impacts not depicted (Reference Joint Permit Application Impact Plates)

Abbreviations

PEM - Palustrine Emergent Wetland	E2EM - Estuarine Intertidal Emergent Marsh
PFO - Palustrine Forested Wetland	E2RF - Estuarine Intertidal Reef
PSS - Palustrine Scrub/Shrub Wetland	E2FO - Estuarine Intertidal Forest
PUB - Palustrine Unconsolidated Bottom	R2 - Riverine - Lower Perennial
E1OW - Estuarine Subtidal Open Water	R4 - Riverine - Intermittent
E2SS - Estuarine Intertidal Scrub Shrub	R6 - Riverine - Ephemeral
E2US2 - Estuarine Intertidal Unconsolidated Shore - Sand	
E2US3 - Estuarine Intertidal Unconsolidated Shore - Mud	

PRELIMINARY PLANS
THESE PLANS NOT TO BE USED FOR CONSTRUCTION OR THE ACQUISITION OF RIGHT OF WAY

FINAL PLAN REVISIONS SUBMITTAL DATE:

NO.	DATE	AUTH.	DESCRIPTION	NO.	DATE	AUTH.	DESCRIPTION

HRBT EXPANSION | HAMPTON ROADS CONNECTOR PARTNERS | 64 HDR | MOTT MACDONALD | Design Joint Venture

Designed: CJD
Drawn: ESK
Checked: EMF

ROADWAY DIVISION
DATE: .....

JPA - NORTH TRESTLE
EB NORTH ISLAND
GENERAL PLAN AND ELEVATION

Plan No.	Sheet No.
304-68	S7

304-68_JPA7

Additional Info/Revision
Received by VMRC December 26, 2019 /lra

STATE	FEDERAL AID ROUTE	FEDERAL AID PROJECT	STATE ROUTE	STATE PROJECT	SHEET NO.
V-.	—	NHPP-5A03(992)	64	0064-M06-032-501.	

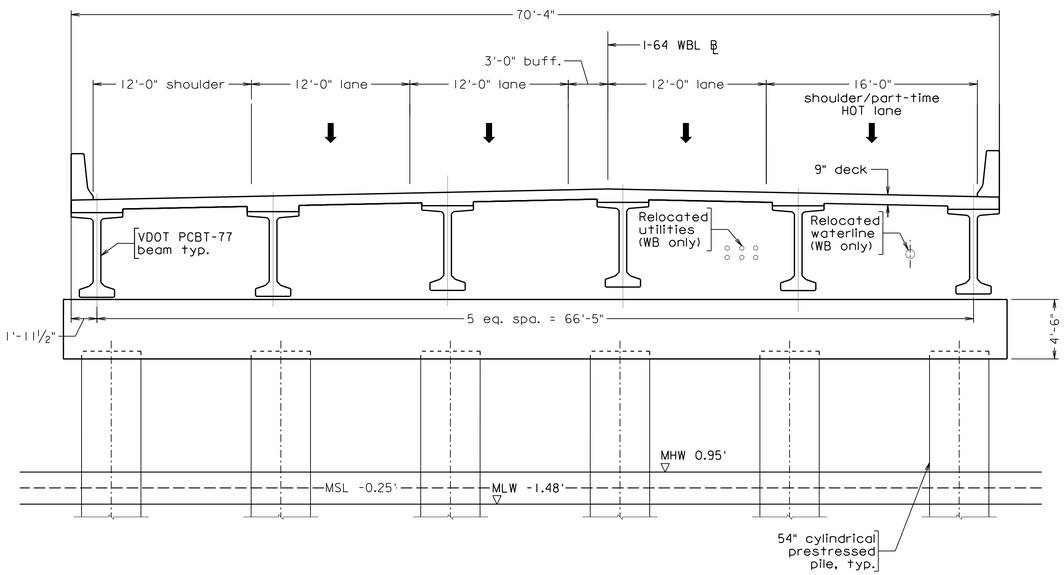

TRANSVERSE SECTION
Westbound

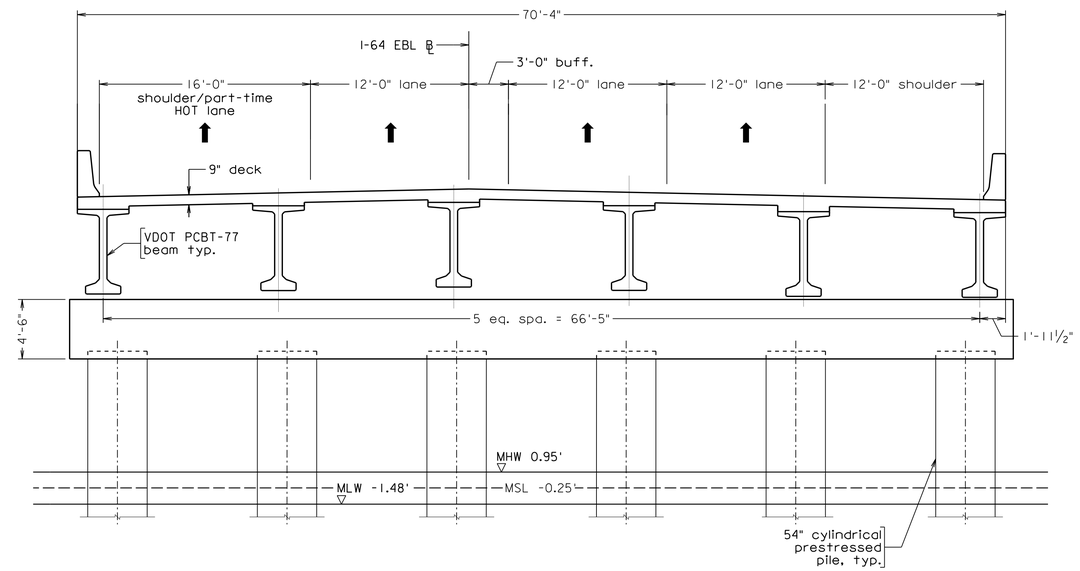

TRANSVERSE SECTION
Eastbound

PRELIMIN-RY PL-NS
THESE PL-NS NOT TO BE USED FOR CONSTRUCTION OR THE ACQUISITION OF RIGHT OF WAY

Scale: 3/16" = 1'-0"

© 2019, Commonwealth of Virginia

FINAL PLAN REVISIONS SUBMITTAL DATE:

NO.	DATE	AUTH.	DESCRIPTION	NO.	D-TE	AUTH.	DESCRIPTION

HRBT EXPANSION | HAMPTON ROADS CONNECTOR PARTNERS | 64 HDR | MOTT MACDONALD | Design Joint Venture

Designed: CJD
Drawn: ESK
Checked: EMF

STRUCTURE -ND BRIDGE DIVISION
DATE: .....

JPA - NORTH TRESTLE
TYPICAL CROSS SECTION

Plan No. 304-68
Sheet No. S8

ProjectWise File Location: \\
Plotted by: CDEAN
Date & Time: Friday, November 22, 2019 02:03:28 PM

Additional Info/Revision
Received by VMRC December 26, 2019 /lra

PenTable:bfull.tbl
Plot Driver :Bridge Local PDF File Generator.pltcfg

304-68_JPA8

STATE	FEDERAL AID ROUTE	FEDERAL AID PROJECT	STATE ROUTE	STATE PROJECT	SHEET NO.
V-.	—	NHPP-5A03(992)	64	0064-M06-032-501.	

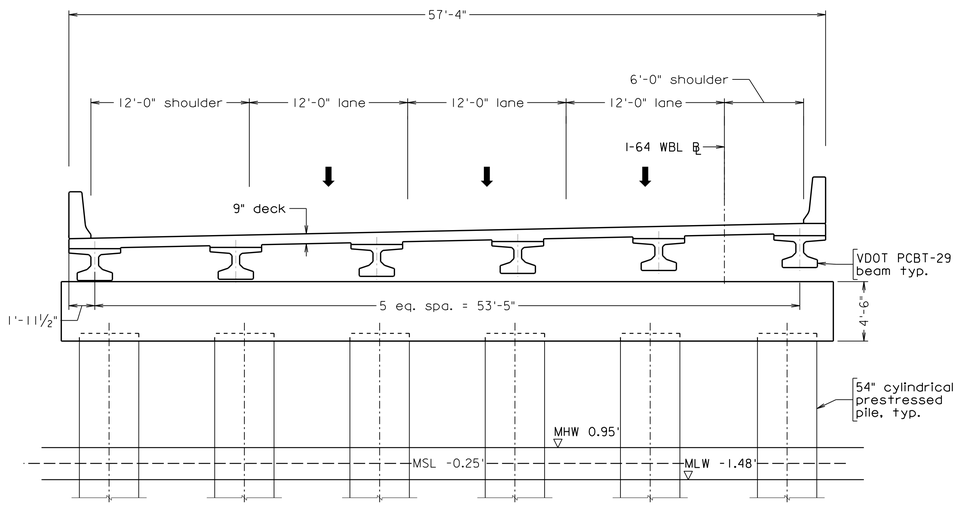

TRANSVERSE SECTION

Scale: 3/16" = 1'-0"

© 2019, Commonwealth of Virginia

PRELIMIN-RY PL-NS
THESE PL-NS NOT TO BE USED FOR CONSTRUCTION OR THE -CQUISITION OF RIGHT OF W-Y

FINAL PLAN REVISIONS SUBMITTAL DATE:

NO.	DATE	AUTH.	DESCRIPTION	NO.	D-TE	AUTH.	DESCRIPTION

HRBT EXPANSION | HAMPTON ROADS CONNECTOR PARTNERS | 64 HDR | MOTT MACDONALD | Design Joint Venture

Designed: CJD
Drawn: ESK
Checked: EMF

STRUCTURE -ND BRIDGE DIVISION
DATE: .....

JPA - NORTH TRESTLE
WB GENERAL PURPOSE
CROSS SECTION

Plan No.	Sheet No.
304-68	S9

ProjectWise File Location: \\
Plotted by: CDEAN
Date & Time: Friday, November 22, 2019 02:03:40 PM

PenTable:bfull.tbl
Plot Driver :Bridge Local PDF File Generator.pltcfg

304-68_JPA9

Additional Info/Revision
Received by VMRC December 26, 2019 /lra

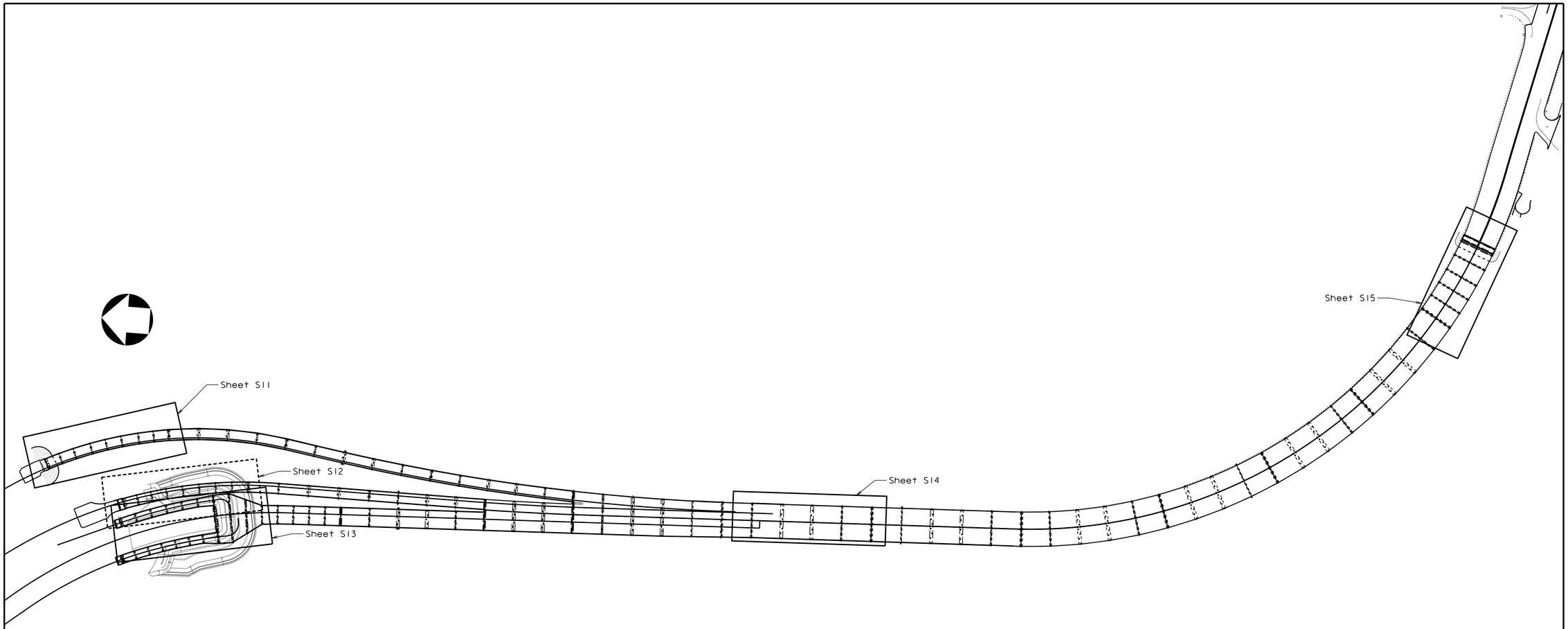

01 South Shore Key Map

PRELIMIN-RY PL-NS
THESE PL-NS NOT TO BE USED FOR CONSTRUCTION OR THE -CQUISITION OF RIGHT OF W-Y

FINAL PLAN REVISIONS SUBMITTAL DATE:

NO.	DATE	AUTH.	DESCRIPTION	NO.	DATE	AUTH.	DESCRIPTION

HRBT EXPANSION

HAMPTON ROADS CONNECTOR PARTNERS

64 HDR | MOTT MACDONALD
Design Joint Venture

Designed: .....
Drawn: .....WAN..
Checked: .....

RO-DW-Y DIVISION
DATE: 08-30-19

SOUTH APPROACH TRESTLE
SOUTH SHORE
KEY MAP

Plan No.	Sheet No.
304-69	S10

Additional Info/Revision
Received by VMRC December 26, 2019 /Ira

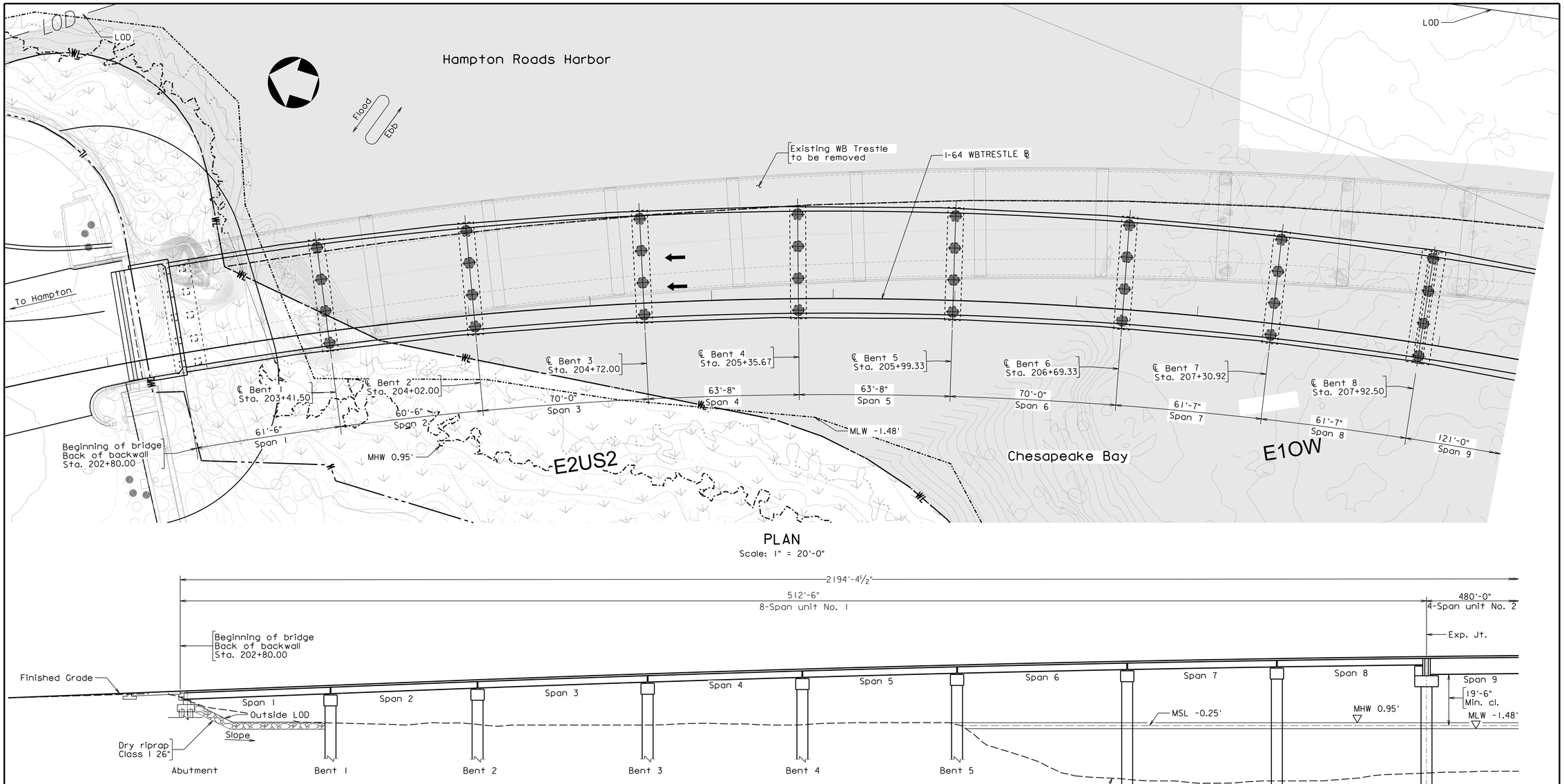

01a WB South Island General Purpose General Plan and Elevation

Legend

- WL — Wetland Limits
- Wetland Area
- Estuarine Subtidal Open Water
- Submerged Aquatic Vegetation
- Permanent Wetland Impact

*Shading Impacts and Temporary Impacts not depicted (Reference Joint Permit Application Impact Plates)

Abbreviations

PEM - Palustrine Emergent Wetland
PFO - Palustrine Forested Wetland
PSS - Palustrine Scrub/Shrub Wetland
PUB - Palustrine Unconsolidated Bottom
E1OW - Estuarine Subtidal Open Water
E2SS - Estuarine Intertidal Scrub Shrub
E2US2 - Estuarine Intertidal Unconsolidated Shore - Sand
E2US3 - Estuarine Intertidal Unconsolidated Shore - Mud
E2EM - Estuarine Intertidal Emergent Marsh
E2RF - Estuarine Intertidal Reef
E2FO - Estuarine Intertidal Forest
R2 - Riverine - Lower Perennial
R4 - Riverine - Intermittent
R6 - Riverine - Ephemeral

PRELIMINARY PLANS
THESE PLANS NOT TO BE USED FOR CONSTRUCTION OR THE ACQUISITION OF RIGHT OF WAY

FINAL PLAN REVISIONS SUBMITTAL DATE:

NO.	DATE	AUTH.	DESCRIPTION	NO.	DATE	AUTH.	DESCRIPTION

HRBT EXPANSION | HAMPTON ROADS CONNECTOR PARTNERS | 64 HDR | MOTT MACDONALD | Design Joint Venture

Designed: ALL
Drawn: HOT
Checked: JA

ROADWAY DIVISION
DATE: 06-05-19

WB SOUTH ISLAND GENERAL PURPOSE GENERAL PLAN & ELEVATION

Plan No.	Sheet No.
304-69	S11

Additional Info/Revision
Received by VMRC December 26, 2019 /lra

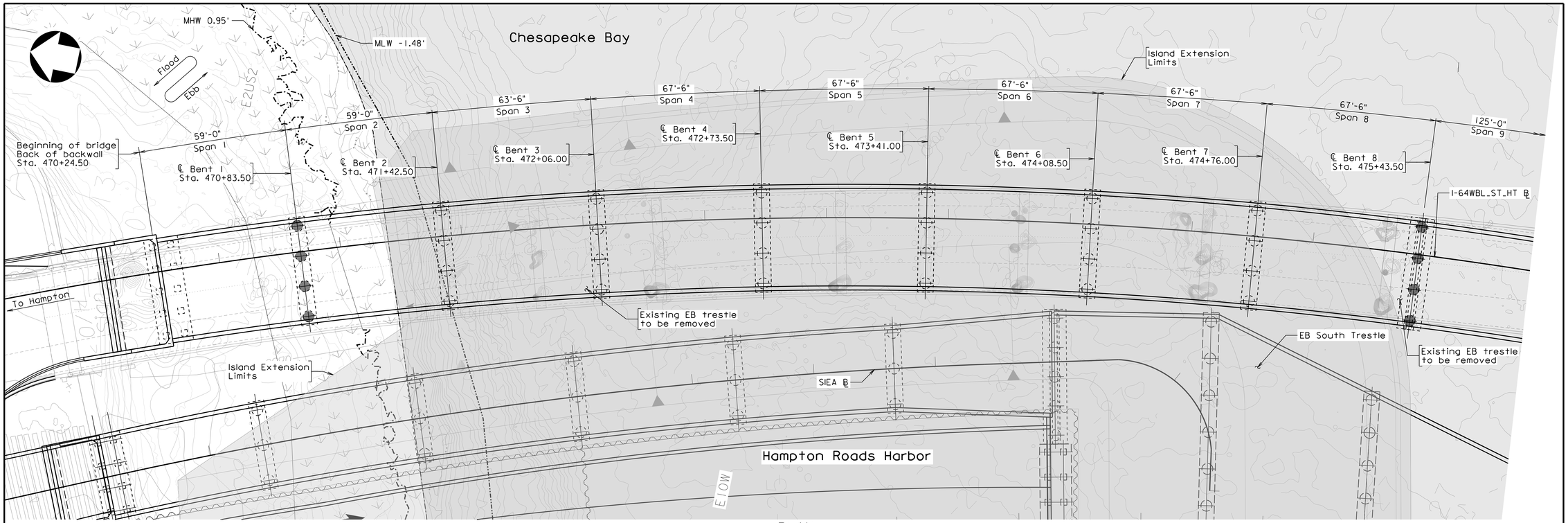

PLAN

Scale: 1" = 20'-0"

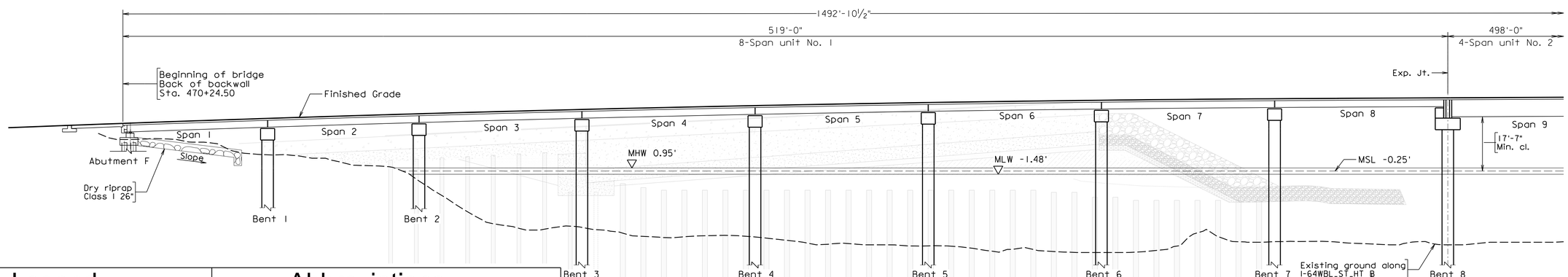

DEVELOPED SECTION ALONG I-64WB_ST_HT ℄

Scale: 1" = 20'-0"

Legend

- -WL- Wetland Limits
- Wetland Area
- Estuarine Subtidal Open Water
- Submerged Aquatic Vegetation
- Permanent Wetland Impact

*Shading Impacts and Temporary Impacts not depicted (Reference Joint Permit Application Impact Plates)

Abbreviations

PEM - Palustrine Emergent Wetland
PFO - Palustrine Forested Wetland
PSS - Palustrine Scrub/Shrub Wetland
PUB - Palustrine Unconsolidated Bottom
E1OW - Estuarine Subtidal Open Water
E2SS - Estuarine Intertidal Scrub Shrub
E2US2 - Estuarine Intertidal Unconsolidated Shore - Sand
E2US3 - Estuarine Intertidal Unconsolidated Shore - Mud
E2EM - Estuarine Intertidal Emergent Marsh
E2RF - Estuarine Intertidal Reef
E2FO - Estuarine Intertidal Forest
R2 - Riverine - Lower Perennial
R4 - Riverine - Intermittent
R6 - Riverine - Ephemeral

PRELIMINARY PLANS
THESE PLANS NOT TO BE USED FOR CONSTRUCTION OR THE ACQUISITION OF RIGHT OF WAY

FINAL PLAN REVISIONS SUBMITTAL DATE:

NO.	DATE	AUTH.	DESCRIPTION	NO.	DATE	AUTH.	DESCRIPTION

HRBT EXPANSION | HAMPTON ROADS CONNECTOR PARTNERS | 64 HDR | MOTT MACDONALD | Design Joint Venture

Designed: ALL
Drawn: HOT
Checked: JA

ROADWAY DIVISION
DATE: 06-05-19

WB SOUTH ISLAND HOT/HOV GENERAL PLAN & ELEVATION

Plan No. 304-69

Sheet No. S12

02 WB South Island HOTHOV General Plan and Elevation

Additional Info/Revision
Received by VMRC December 26, 2019 /lra

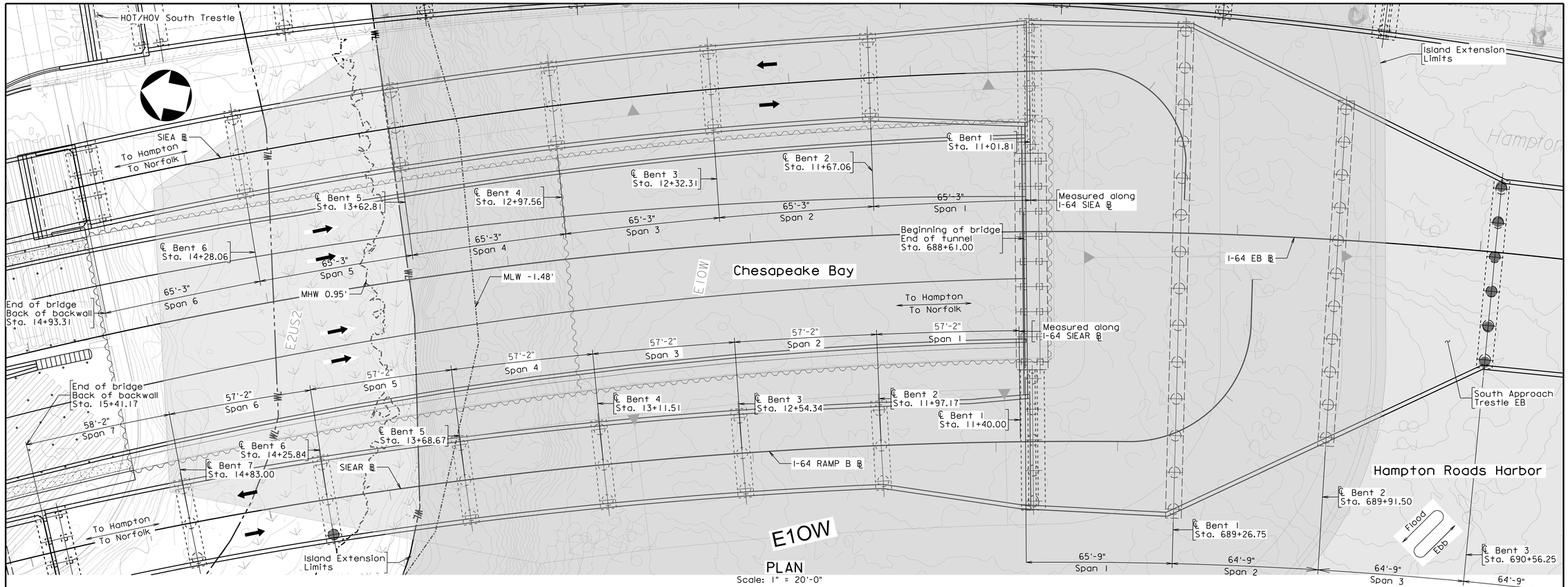

PLAN
Scale: 1" = 20'-0"

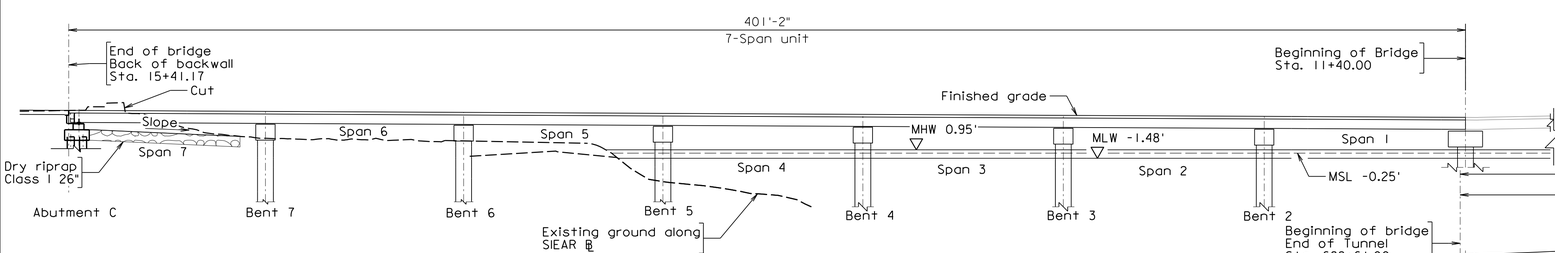

DEVELOPED SECTION ALONG SIEAR ℄
Scale: 1" = 20'-0"

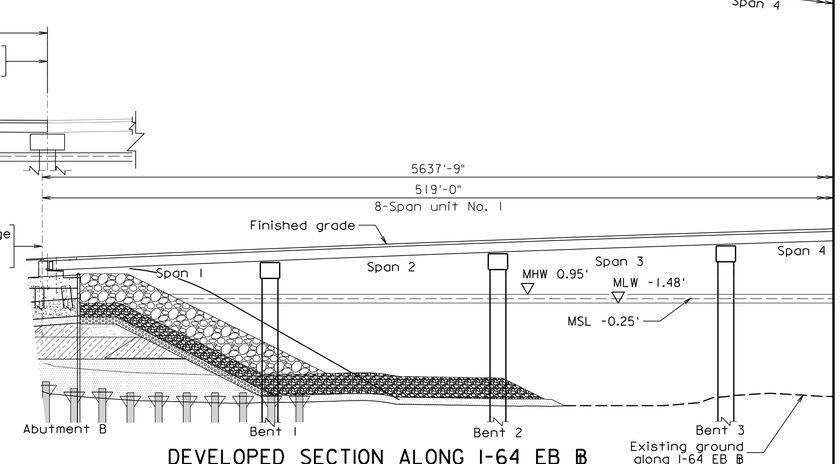

DEVELOPED SECTION ALONG I-64 EB ℄
Scale: 1" = 20'-0"

Legend

- -WL- Wetland Limits
- Wetland Area
- Estuarine Subtidal Open Water
- Submerged Aquatic Vegetation
- Permanent Wetland Impact

*Shading Impacts and Temporary Impacts not depicted (Reference Joint Permit Application Impact Plates)

Abbreviations

PEM - Palustrine Emergent Wetland
PFO - Palustrine Forested Wetland
PSS - Palustrine Scrub/Shrub Wetland
PUB - Palustrine Unconsolidated Bottom
E1OW - Estuarine Subtidal Open Water
E2SS - Estuarine Intertidal Scrub Shrub
E2US2 - Estuarine Intertidal Unconsolidated Shore - Sand
E2US3 - Estuarine Intertidal Unconsolidated Shore - Mud
E2EM - Estuarine Intertidal Emergent Marsh
E2RF - Estuarine Intertidal Reef
E2FO - Estuarine Intertidal Forest
R2 - Riverine - Lower Perennial
R4 - Riverine - Intermittent
R6 - Riverine - Ephemeral

PRELIMINARY PLANS
THESE PLANS NOT TO BE USED FOR CONSTRUCTION OR THE ACQUISITION OF RIGHT OF WAY

FINAL PLAN REVISIONS SUBMITTAL DATE:

NO.	DATE	AUTH.	DESCRIPTION	NO.	DATE	AUTH.	DESCRIPTION

HRBT EXPANSION | HAMPTON ROADS CONNECTOR PARTNERS | 64 HDR | MOTT MACDONALD | Design Joint Venture

Designed: ALJ
Drawn: HOT
Checked: JA

ROADWAY DIVISION
DATE: 06-05-19

EB SOUTH ISLAND GENERAL PLAN & ELEVATION

Plan No. 304-69
Sheet No. S13

03 EB South Island General Plan and Elevation

Additional Info/Revision
Received by VMRC December 26, 2019 /lra

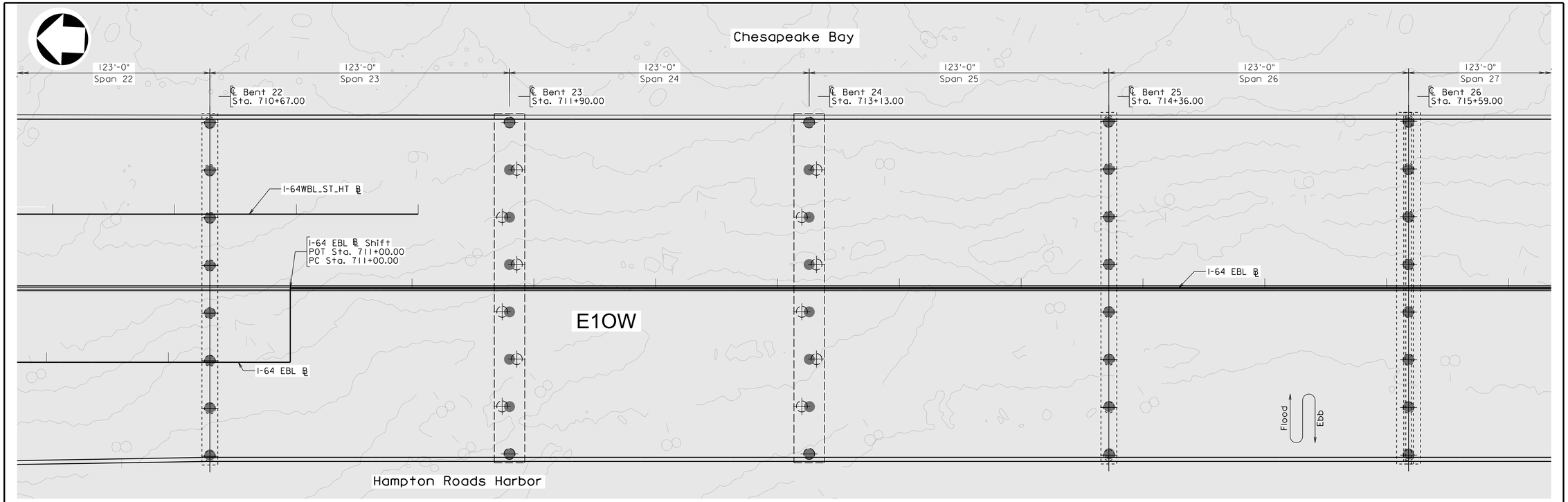

PLAN
Scale: 1" = 20'-0"

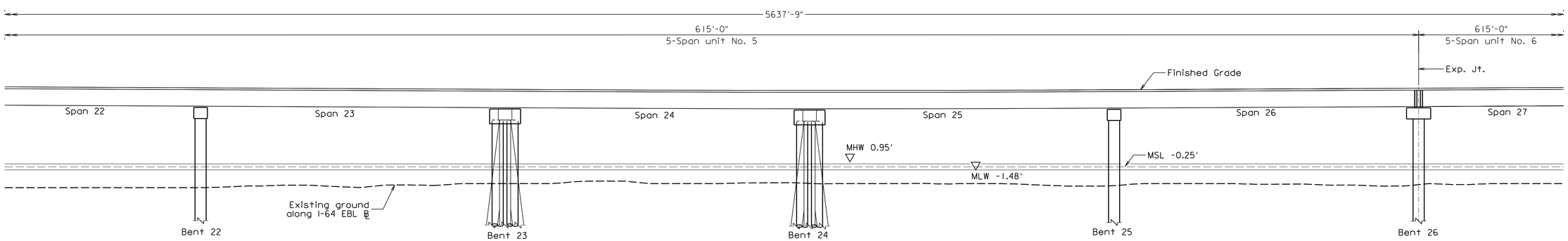

DEVELOPED SECTION ALONG I-64 EBL ℄
Scale: 1" = 20'-0"

06 Typical Plan and Elevation

Legend

- WL - Wetland Limits
- Wetland Area
- Estuarine Subtidal Open Water
- Submerged Aquatic Vegetation
- Permanent Wetland Impact

*Shading Impacts and Temporary Impacts not depicted (Reference Joint Permit Application Impact Plates)

Abbreviations

PEM	Palustrine Emergent Wetland	E2EM	Estuarine Intertidal Emergent Marsh
PFO	Palustrine Forested Wetland	E2RF	Estuarine Intertidal Reef
PSS	Palustrine Scrub/Shrub Wetland	E2FO	Estuarine Intertidal Forest
PUB	Palustrine Unconsolidated Bottom	R2	Riverine - Lower Perennial
E1OW	Estuarine Subtidal Open Water	R4	Riverine - Intermittent
E2SS	Estuarine Intertidal Scrub Shrub	R6	Riverine - Ephemeral
E2US2	Estuarine Intertidal Unconsolidated Shore - Sand		
E2US3	Estuarine Intertidal Unconsolidated Shore - Mud		

PRELIMINARY PLANS
THESE PLANS NOT TO BE USED FOR CONSTRUCTION OR THE ACQUISITION OF RIGHT OF WAY

FINAL PLAN REVISIONS SUBMITTAL DATE:

NO.	DATE	AUTH.	DESCRIPTION	NO.	DATE	AUTH.	DESCRIPTION

HRBT EXPANSION | HAMPTON ROADS CONNECTOR PARTNERS | 64 HDR | MOTT MACDONALD | Design Joint Venture

Designed: ALL
Drawn: HOT
Checked: JA

ROADWAY DIVISION
DATE: 06-05-19

SOUTH APPROACH TRESTLE
GENERAL PLAN & ELEVATION

Plan No.	Sheet No.
304-69	S14

Additional Info/Revision
Received by VMRC December 26, 2019 /lra

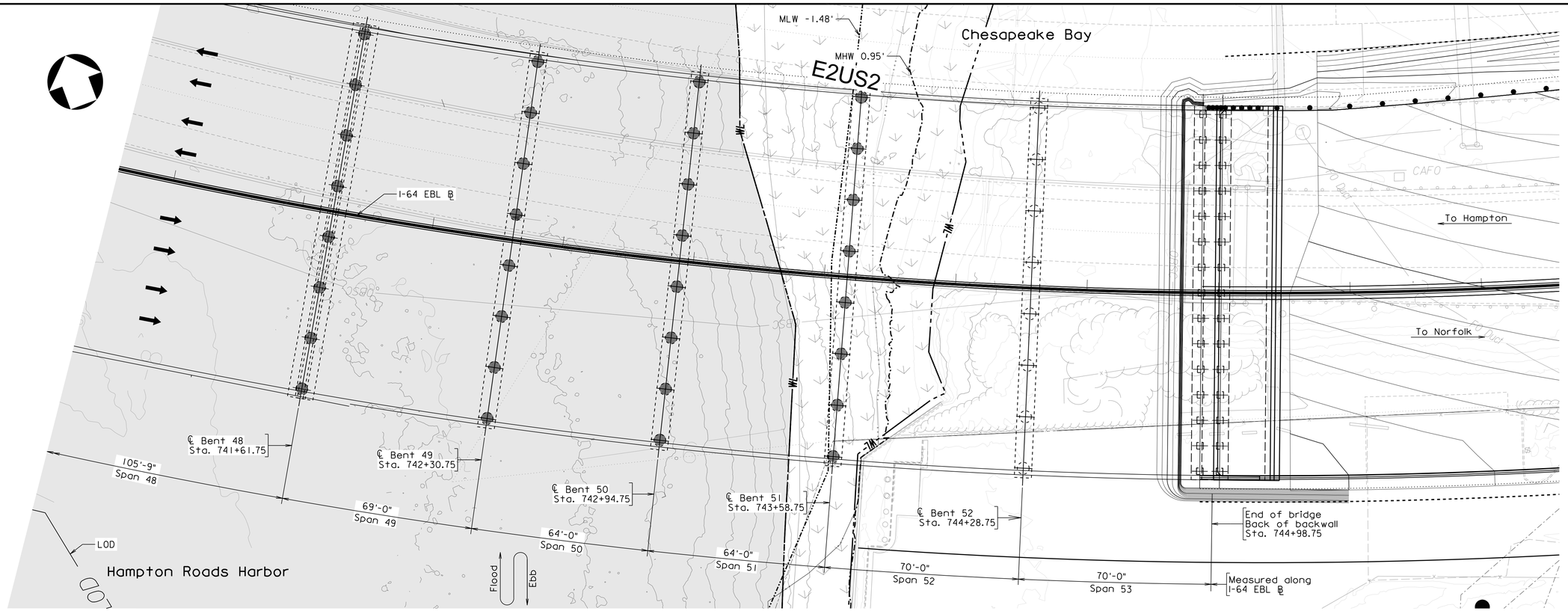

PLAN
Scale: 1" = 20'-0"

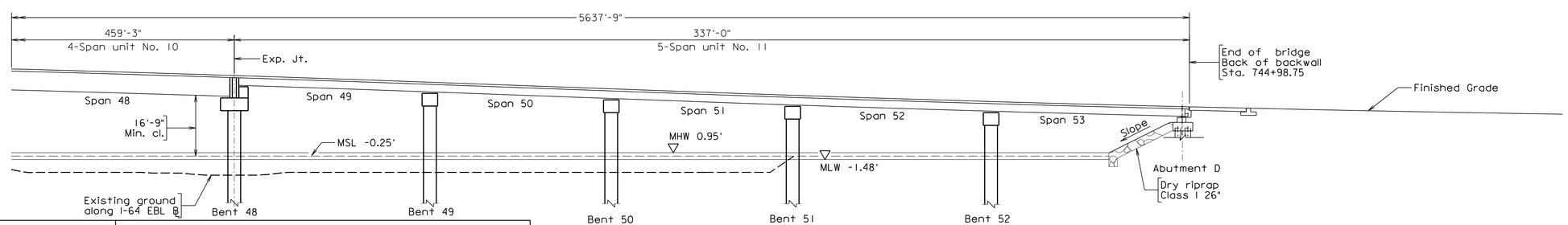

DEVELOPED SECTION ALONG I-64 EBL ℄
Scale: 1" = 20'-0"

Legend

- WL Wetland Limits
- Wetland Area
- Estuarine Subtidal Open Water
- Submerged Aquatic Vegetation
- Permanent Wetland Impact

*Shading Impacts and Temporary Impacts not depicted (Reference Joint Permit Application Impact Plates)

Abbreviations

PEM - Palustrine Emergent Wetland
PFO - Palustrine Forested Wetland
PSS - Palustrine Scrub/Shrub Wetland
PUB - Palustrine Unconsolidated Bottom
E1OW - Estuarine Subtidal Open Water
E2SS - Estuarine Intertidal Scrub Shrub
E2US2 - Estuarine Intertidal Unconsolidated Shore - Sand
E2US3 - Estuarine Intertidal Unconsolidated Shore - Mud
E2EM - Estuarine Intertidal Emergent Marsh
E2RF - Estuarine Intertidal Reef
E2FO - Estuarine Intertidal Forest
R2 - Riverine - Lower Perennial
R4 - Riverine - Intermittent
R6 - Riverine - Ephemeral

PRELIMINARY PLANS
THESE PLANS NOT TO BE USED FOR CONSTRUCTION OR THE ACQUISITION OF RIGHT OF WAY

FINAL PLAN REVISIONS SUBMITTAL DATE:

NO.	DATE	AUTH.	DESCRIPTION	NO.	DATE	AUTH.	DESCRIPTION

HRBT EXPANSION
HAMPTON ROADS CONNECTOR PARTNERS
64 HDR | MOTT MACDONALD Design Joint Venture

Designed: AJJ
Drawn: HQT
Checked: JA

ROADWAY DIVISION
DATE: 06-05-19

SOUTH APPROACH TRESTLE
SOUTH SHORE
GENERAL PLAN & ELEVATION

Plan No.	Sheet No.
304-69	S15

07 South Shore General Plan and Elevation

Additional Info/Revision
Received by VMRC December 26, 2019 /Ira

08 Main Trestle Typical Cross Section

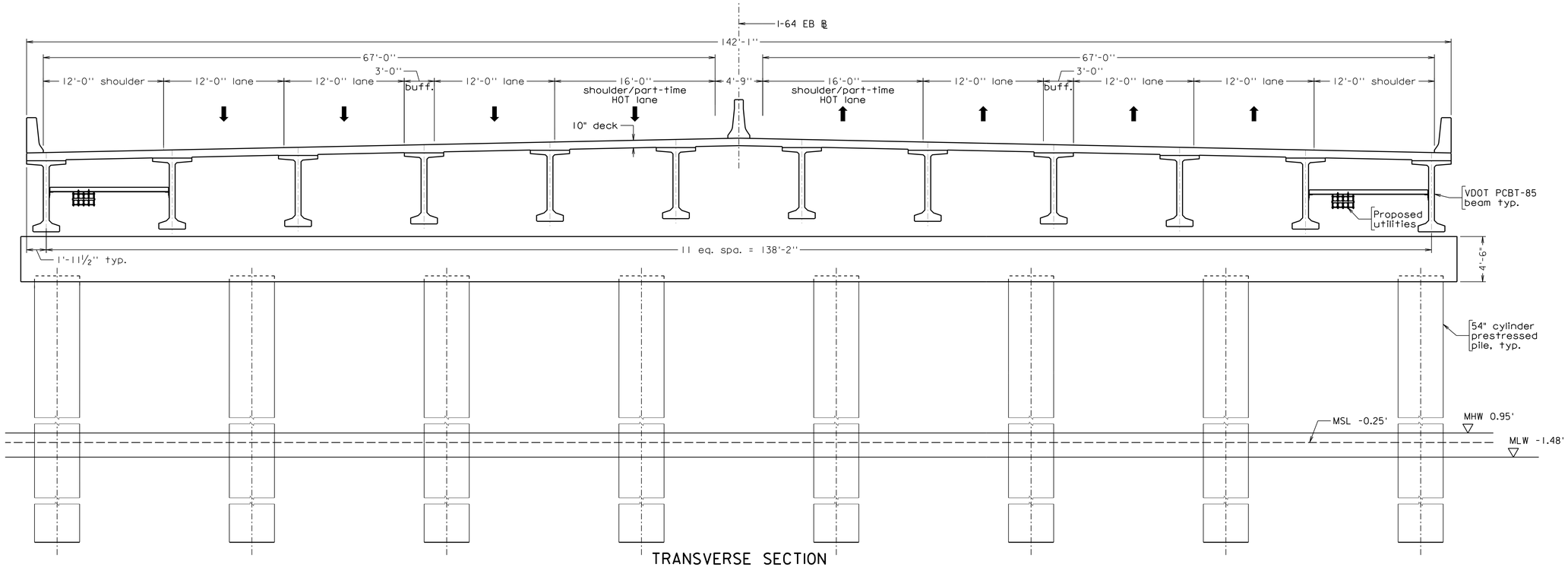

TRANSVERSE SECTION
Scale: 3/16" = 1'-0"

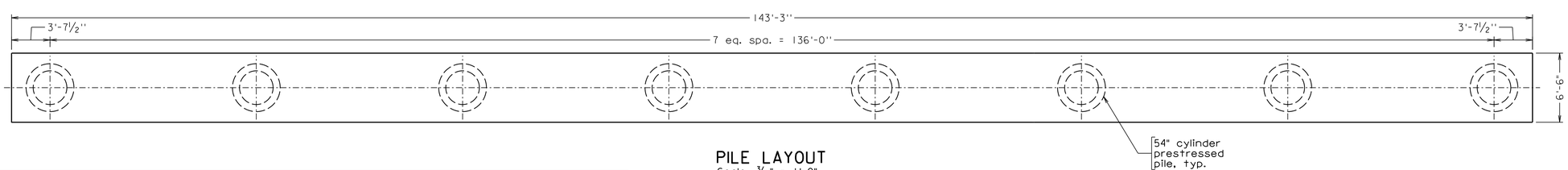

PILE LAYOUT
Scale: 3/16" = 1'-0"

Legend

- -WL- Wetland Limits
- Wetland Area
- Estuarine Subtidal Open Water
- Submerged Aquatic Vegetation
- Permanent Wetland Impact

*Shading Impacts and Temporary Impacts not depicted (Reference Joint Permit Application Impact Plates)

Abbreviations

PEM - Palustrine Emergent Wetland
PFO - Palustrine Forested Wetland
PSS - Palustrine Scrub/Shrub Wetland
PUB - Palustrine Unconsolidated Bottom
E1OW - Estuarine Subtidal Open Water
E2SS - Estuarine Intertidal Scrub Shrub
E2US2 - Estuarine Intertidal Unconsolidated Shore - Sand
E2US3 - Estuarine Intertidal Unconsolidated Shore - Mud
E2EM - Estuarine Intertidal Emergent Marsh
E2RF - Estuarine Intertidal Reef
E2FO - Estuarine Intertidal Forest
R2 - Riverine - Lower Perennial
R4 - Riverine - Intermittent
R6 - Riverine - Ephemeral

PRELIMIN-RY PL-NS
THESE PL-NS NOT TO BE USED FOR CONSTRUCTION OR THE -QUISITION OF RIGHT OF W-Y

FINAL PLAN REVISIONS SUBMITTAL DATE:

NO.	DATE	AUTH.	DESCRIPTION	NO.	DATE	AUTH.	DESCRIPTION

HRBT EXPANSION | HAMPTON ROADS CONNECTOR PARTNERS | 64 HDR | MOTT MACDONALD | Design Joint Venture

Designed: ALL
Drawn: WAN
Checked: JA

RO-DW-Y DIVISION
DATE: 06-05-19

SOUTH APPROACH TRESTLE
TYPICAL CROSS SECTION

Plan No.	Sheet No.
304-69	S16

Additional Info/Revision
Received by VMRC December 26, 2019 /lra

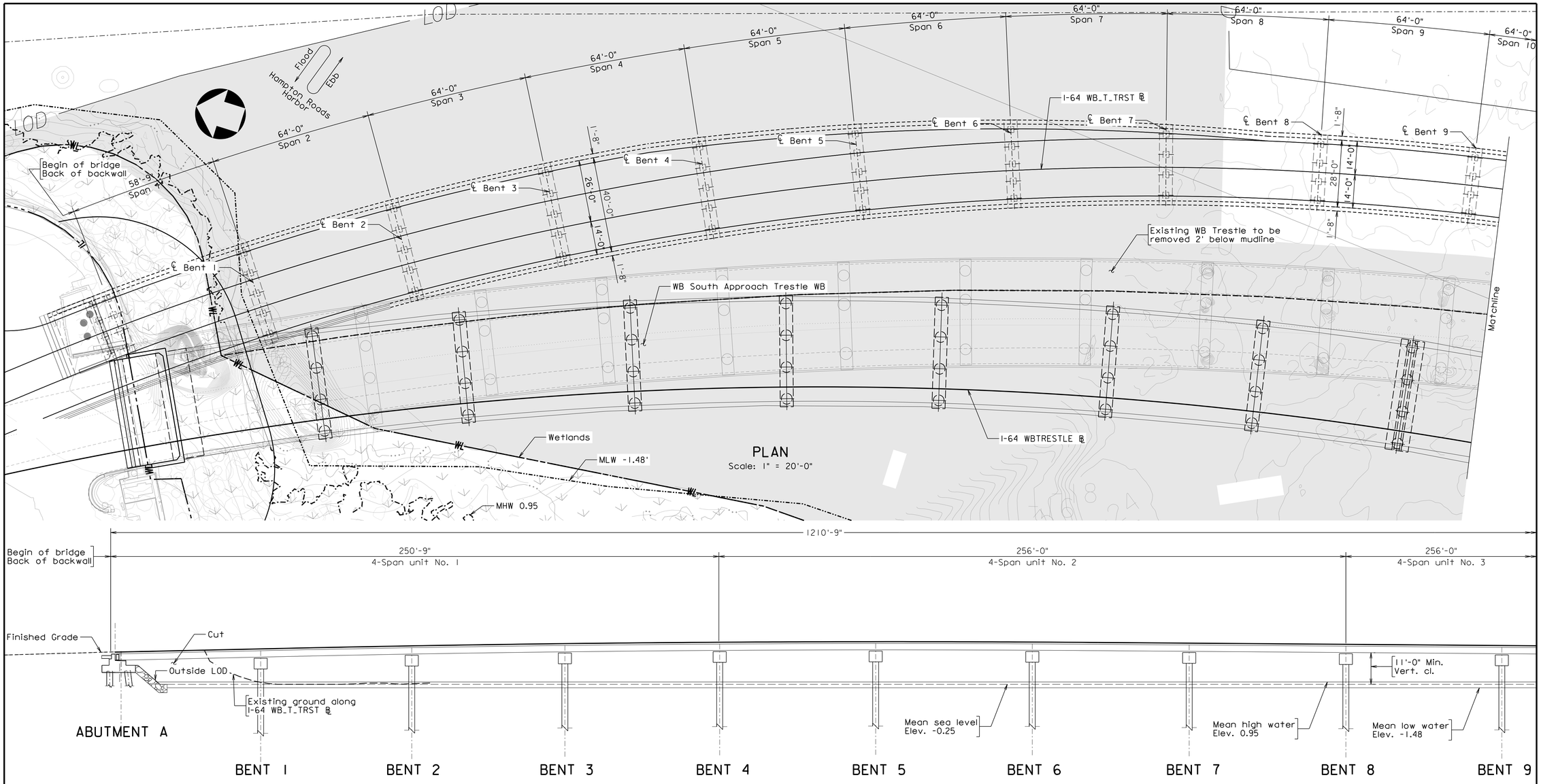

04 WB South Island Temp MOT Trestle General Purpose GPE

Legend

- -WL- Wetland Limits
- Wetland Area
- Estuarine Subtidal Open Water
- Submerged Aquatic Vegetation
- Permanent Wetland Impact

*Shading Impacts and Temporary Impacts not depicted (Reference Joint Permit Application Impact Plates)

Abbreviations

PEM - Palustrine Emergent Wetland
PFO - Palustrine Forested Wetland
PSS - Palustrine Scrub/Shrub Wetland
PUB - Palustrine Unconsolidated Bottom
E1OW - Estuarine Subtidal Open Water
E2SS - Estuarine Intertidal Scrub Shrub
E2US2 - Estuarine Intertidal Unconsolidated Shore - Sand
E2US3 - Estuarine Intertidal Unconsolidated Shore - Mud
E2EM - Estuarine Intertidal Emergent Marsh
E2RF - Estuarine Intertidal Reef
E2FO - Estuarine Intertidal Forest
R2 - Riverine - Lower Perennial
R4 - Riverine - Intermittent
R6 - Riverine - Ephemeral

DEVELOPED SECTION ALONG I-64 WB TEMP ℄
Scale: 1" = 20'-0"

PRELIMINARY PLANS
THESE PLANS NOT TO BE USED FOR CONSTRUCTION OR THE ACQUISITION OF RIGHT OF WAY

FINAL PLAN REVISIONS SUBMITTAL DATE:

NO.	DATE	AUTH.	DESCRIPTION	NO.	DATE	AUTH.	DESCRIPTION

HRBT EXPANSION | HAMPTON ROADS CONNECTOR PARTNERS | 64 HDR | MOTT MACDONALD | Design Joint Venture

Designed: ALL
Drawn: HOT
Checked: JA

ROADWAY DIVISION
DATE: 06-05-19

WB SOUTH ISLAND TEMP MOT TRESTLE GENERAL PURPOSE GENERAL PLAN & ELEVATION

Plan No.	Sheet No.
XXX-XX	S13

Additional Info/Revision
Received by VMRC December 26, 2019 /lra

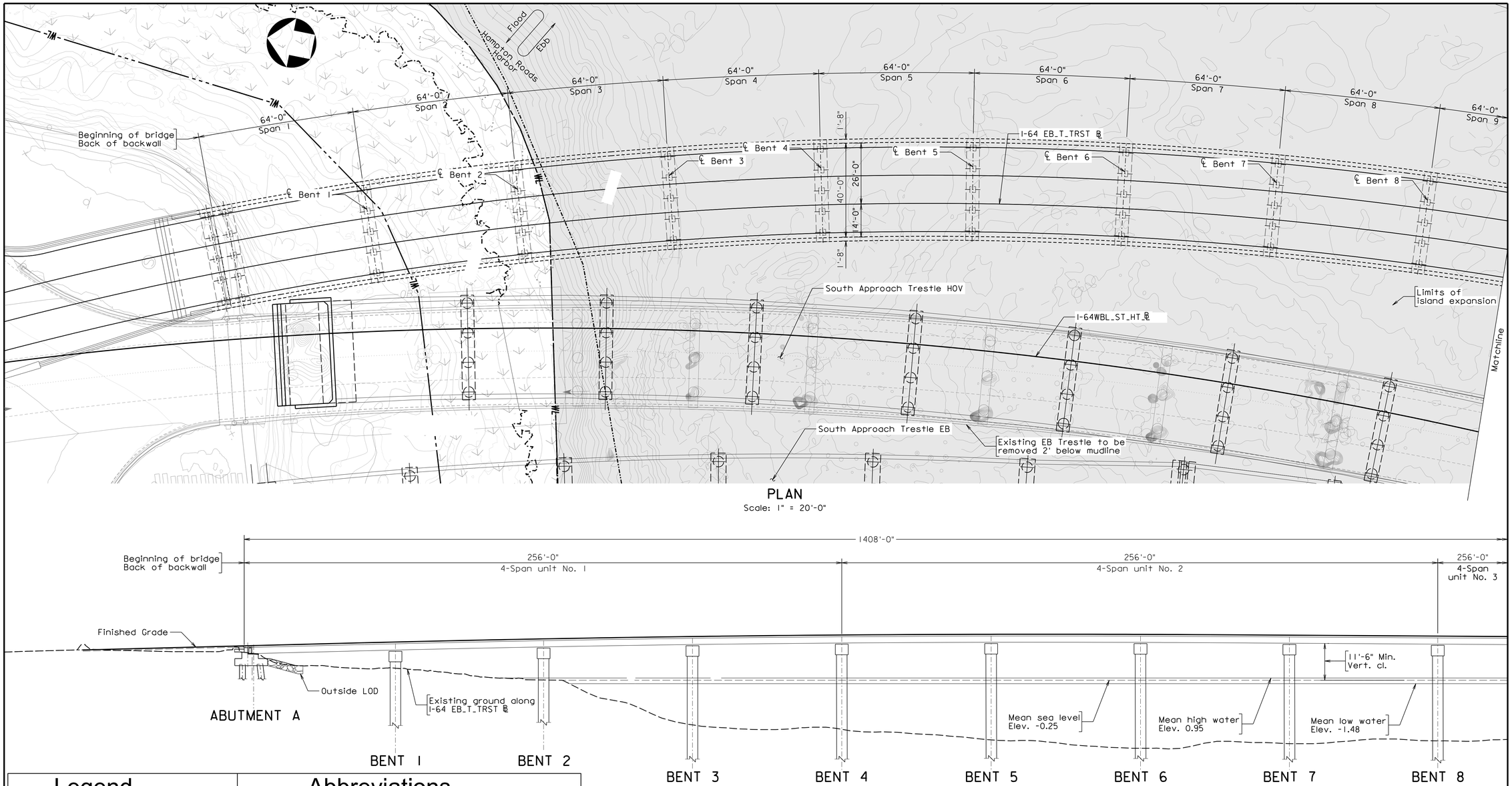

PLAN

Scale: 1" = 20'-0"

DEVELOPED SECTION ALONG I-64 EB_T_TRST ℄

Scale: 1" = 20'-0"

Legend

- -WL- Wetland Limits
- Wetland Area
- Estuarine Subtidal Open Water
- Submerged Aquatic Vegetation
- Permanent Wetland Impact

*Shading Impacts and Temporary Impacts not depicted (Reference Joint Permit Application Impact Plates)

Abbreviations

PEM - Palustrine Emergent Wetland	E2EM - Estuarine Intertidal Emergent Marsh
PFO - Palustrine Forested Wetland	E2RF - Estuarine Intertidal Reef
PSS - Palustrine Scrub/Shrub Wetland	E2FO - Estuarine Intertidal Forest
PUB - Palustrine Unconsolidated Bottom	R2 - Riverine - Lower Perennial
E1OW - Estuarine Subtidal Open Water	R4 - Riverine - Intermittent
E2SS - Estuarine Intertidal Scrub Shrub	R6 - Riverine - Ephemeral
E2US2 - Estuarine Intertidal Unconsolidated Shore - Sand	
E2US3 - Estuarine Intertidal Unconsolidated Shore - Mud	

PRELIMINARY PLANS
THESE PLANS NOT TO BE USED FOR CONSTRUCTION OR THE ACQUISITION OF RIGHT OF WAY

FINAL PLAN REVISIONS SUBMITTAL DATE:

NO.	DATE	AUTH.	DESCRIPTION	NO.	DATE	AUTH.	DESCRIPTION

HRBT EXPANSION | HAMPTON ROADS CONNECTOR PARTNERS | 64 HDR | MOTT MACDONALD | Design Joint Venture

Designed: ALL
Drawn: HOT
Checked: JA

ROADWAY DIVISION
DATE: 06-05-19

EB SOUTH ISLAND TEMP MOT TRESTLE GENERAL PURPOSE GENERAL PLAN AND ELEVATION

Plan No.	Sheet No.
XXX-XX	S14

05 WB South Island Temp MOT Trestle General Purpose

Additional Info/Revision
Received by VMRC December 26, 2019 /lra